© Siemens AG 2017

SIEMENS

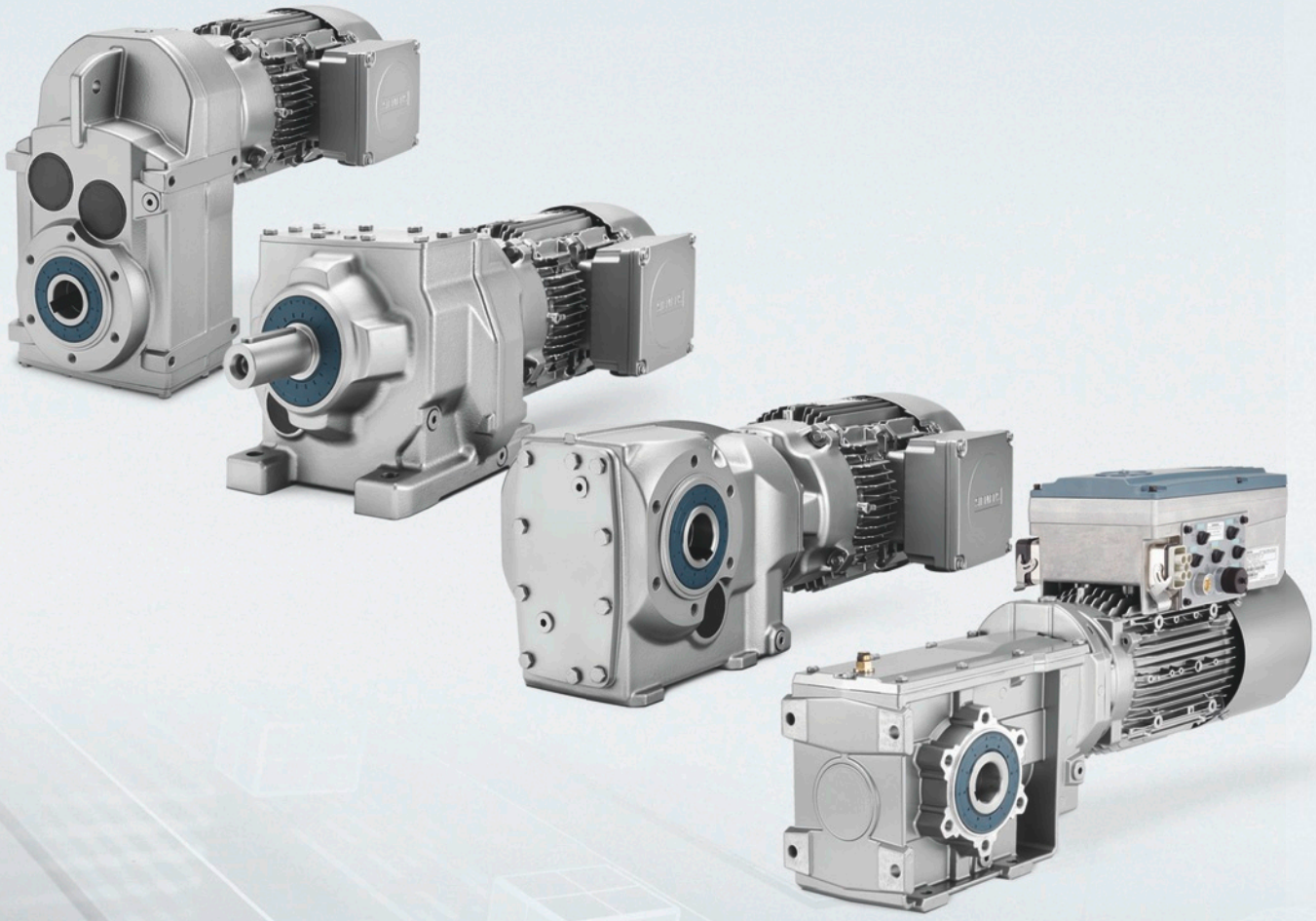

Motion Control

SIMOGEAR Geared Motors

Helical, parallel shaft, bevel, helical worm and worm geared motors

product design award 2013

Catalog MD 50.1

Edition 2017

siemens.com/gearedmotors

© Siemens AG 2017

Related catalogs

SIMOGEAR MD 50.11
Gearboxes with adapter

E86060-K5250-A211-A3-7600



MOTOX Geared Motors D 87.1

E86060-K5287-A111-A4-7600



SIMOTICS GP, SD, XP, DP
Low-Voltage Motors D 81.1
Type series 1FP1, 1LE1, 1MB1 and 1PC1
Frame sizes 71 to 315
Power range 0.09 to 200 kW
E86060-K5581-A111-A9-7600



FLENDER Couplings MD 10.1
Standard Couplings

E86060-K5710-A111-A5-7600



FLENDER SIP MD 31.1
Standard Industrial Planetary Gear Units

E86060-K5731-A111-A5-7600



Motion Control Drives D 31
SINAMICS Inverters for Single-Axis Drives
and SIMOTICS Motors

E86060-K5531-A101-A2-7600



Industrial Communication IK PI
SIMATIC NET

E86060-K6710-A101-B8-7600



SIMOTICS NEMA Motors D 81.2
Low Voltage AC Motors
Selection and Pricing Guide

Further details available on the Internet at:
www.usa.siemens.com/motors

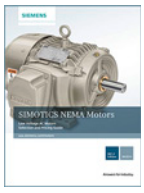

SIMOGEAR Konfigurator
SIMOGEAR Configurator SIMOGEAR
Informieren / Projektieren
(CD)

E86060-D5750-A100-A2-7400



Additional documentation

You will find all information material, such as brochures, catalogs, manuals and operating instructions for standard drive systems up-to-date on the Internet at the address:

www.siemens.com/gearedmotors

You can order the listed documentation or download it in common file formats (PDF, ZIP).

© Siemens AG 2017



SIEMENS

SIMOGEAR Geared Motors

Helical, parallel shaft, bevel, helical worm and worm geared motors

Catalog MD 50.1 · 2017

Dear Customer,

We are happy to present you with the new Catalog MD 50.1 Edition 2017.
This catalog supersedes Catalog MD 50.1 · 2015.

The catalog has been revised and expanded:

- The single-stage helical geared motors of series E with torques of up to 1500 Nm have now been added.
- Tandem geared motors of the helical, parallel shaft, bevel and helical worm geared motors series have also been added.
- The power tables now contain the motor in efficiency class IE3 from 0.75 kW.

We hope that you often use our new Catalog MD 50.1 and find it helpful. We will be glad to receive your suggestions and recommendations for improvement under catalogs.industry@siemens.com (please make reference to the catalog name).

As a supplement to this catalog, the Drive Technology Configurator (DT Configurator) will help you when selecting the optimum geared motor. You can call up the 2D and 3D data in all of the usual file formats and directly process it further.

The DT Configurator can be used on the Internet without requiring any installation.
The DT Configurator can be found in the Siemens Industry Mall at the following address:
www.siemens.com/dt-configurator

Please contact your local Siemens office for additional information.
Up-to-date information about SIMOGEAR geared motors is available on the Internet at:
www.siemens.com/gearedmotors

With kind regards,

Volker Schacher
Head of Product Management
Siemens AG, Digital Factory Division, Motion Control, Geared Motors

© Siemens AG 2017

© Siemens AG 2017

SIMOGEAR Geared Motors

Helical, parallel shaft, bevel, helical worm and worm geared motors

Motion Control

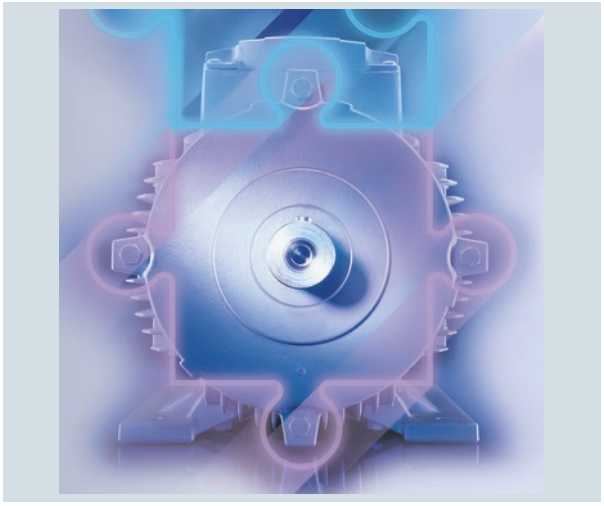

Catalog MD 50.1 · 2017

Supersedes:
Catalog MD 50.1 · 2015

Refer to the Industry Mall for current updates of this catalog:
www.siemens.com/industrymall

The products contained in this catalog can also be found in the Interactive Catalog CA 01.
Article No.: E86060-D4001-A510-D7-7600

Please contact your local Siemens branch.

© Siemens AG 2017

Introduction	1
Configuring guide	2
Helical geared motors	3
Parallel shaft geared motors	4
Bevel geared motors	5
Helical worm geared motors	6
Worm geared motors	7
Motors	8
SINAMICS G110M motor integrated frequency inverter	9
Gearbox options	10
Motor options	11
General options	12
Appendix	13

PEFC
PEFC/04-31-0970

Printed on paper from sustainably managed forests and controlled sources.

www.pefc.org

IQNet
THE INTERNATIONAL CERTIFICATION NETWORK

The products and systems described in this catalog are manufactured/distributed under application of a certified quality management system in accordance with DIN EN ISO 9001 (Certified Registration No. DE-409908 QM08). The certificate is recognized by all IQNet countries.

© Siemens AG 2017

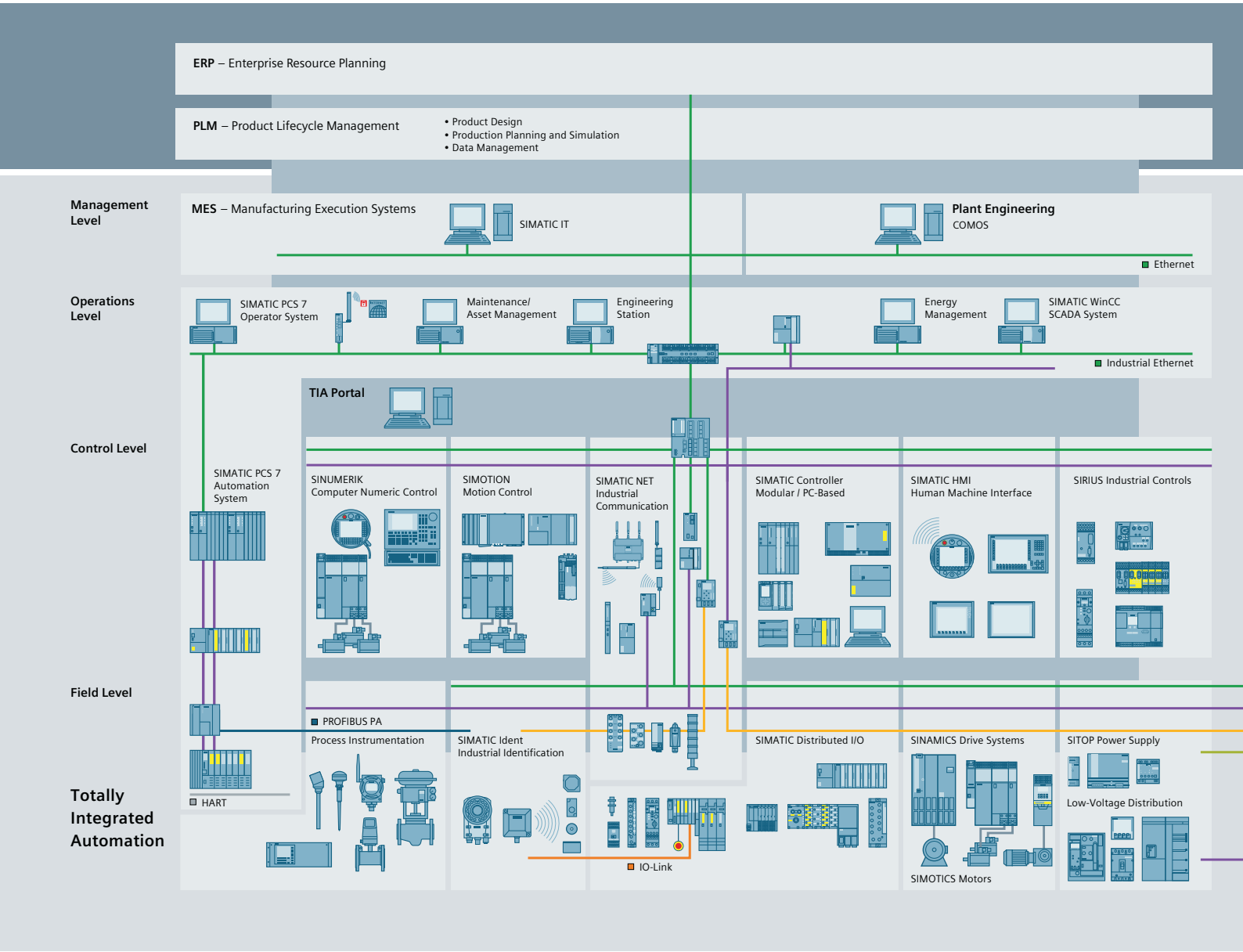

Efficient automation starts with efficient engineering.

Totally Integrated Automation: Efficiency driving productivity.

Efficient engineering is the first step toward better production that is faster, more flexible, and more intelligent. With all components interacting efficiently, Totally Integrated Automation (TIA) delivers enormous time savings right from the engineering phase. The result is lower costs, faster time-to-market, and greater flexibility.

© Siemens AG 2017

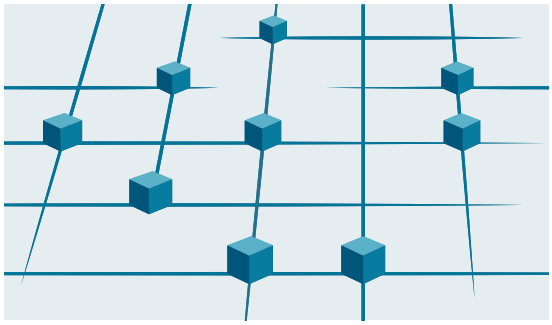

Totally Integrated Automation
Efficient interoperability of all automation components



A unique complete approach for all industries

As one of the world's leading automation suppliers, Siemens provides an integrated, comprehensive portfolio for all requirements in process and manufacturing industries. All components are mutually compatible and system-tested. This ensures that they reliably perform their tasks in industrial use and interact efficiently, and that each automation solution can be implemented with little time and effort based on standard products. The integration of many separate individual engineering tasks into a single engineering environment, for example, provides enormous time and cost savings.

With its comprehensive technology and industry-specific expertise, Siemens is continuously driving progress in manufacturing industries – and Totally Integrated Automation plays a key role.

Totally Integrated Automation creates real value added in all automation tasks, especially for:

- **Integrated engineering**
  Consistent, comprehensive engineering throughout the entire product development and production process
- **Industrial data management**
  Access to all important data occurring in productive operation – along the entire value chain and across all levels
- **Industrial communication**
  Integrated communication based on international cross-vendor standards that are mutually compatible
- **Industrial security**
  Systematic minimization of the risk of an internal or external attack on plants and networks
- **Safety Integrated**
  Reliable protection of personnel, machinery, and the environment thanks to seamless integration of safety technologies into the standard automation

Making things right with Totally Integrated Automation

Totally Integrated Automation, industrial automation from Siemens, stands for the efficient interoperability of all automation components. The open system architecture covers the entire production process and is based on end-to-end shared characteristics: consistent data management, global standards, and uniform hardware and software interfaces.

Totally Integrated Automation lays the foundation for comprehensive optimization of the production process:

- Time and cost savings due to efficient engineering
- Minimized downtime due to integrated diagnostic functions
- Simplified implementation of automation solutions due to global standards
- Better performance due to interoperability of system-tested components

© Siemens AG 2017

Integrated Drive Systems

Faster on the market and in the black with Integrated Drive Systems

SIMOGEAR is an important element of a Siemens Integrated Drive System, contributing significantly to increased efficiency, productivity, and availability in industrial production processes.

Integrated Drive Systems are Siemens' trendsetting answer to the high degree of complexity that characterizes drive and automation technology today. The world's only true one-stop solution for entire drive systems is characterized in particular by its threefold integration: Horizontal, vertical, and lifecycle integration ensure that every drive system component fits seamlessly into the whole system, into any automation environment, and even into the entire lifecycle of a plant.

The outcome is an optimal workflow – from engineering all the way to service that entails more productivity, increased efficiency, and better availability. That's how Integrated Drive Systems reduce time to market and time to profit.

Horizontal integration

Integrated drive portfolio: The core elements of a fully integrated drive portfolio are frequency converters, motors, couplings, and gear units. At Siemens, they're all available from a single source. Perfectly integrated, perfectly interacting. For all power and performance classes. As standard solutions or fully customized. No other player in the market can offer a comparable portfolio. Moreover, all Siemens drive components are perfectly matched, so they are optimally interacting.

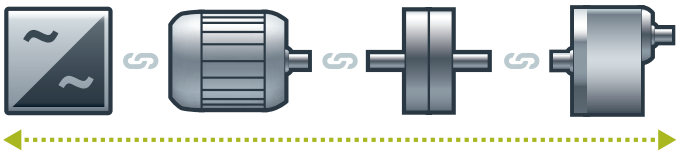

You can boost the availability of your application or plant to up to

99%*

*e.g., conveyor application

Vertical integration

Thanks to **vertical integration**, the complete drive train is seamlessly integrated in the entire automation environment – an important prerequisite for production with maximum value added. Integrated Drive Systems are part of Totally Integrated Automation (TIA), which means that they are perfectly embedded into the system architecture of the entire industrial production process. This enables optimal processes through maximum communication and control.

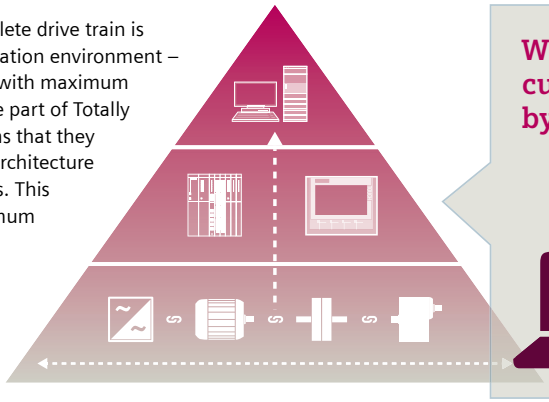

With TIA Portal you can cut your engineering time by up to

30%

Lifecycle integration

Lifecycle integration adds the factor of time: Software and service are available for the entire lifecycle of an Integrated Drive System. That way, important optimization potential for maximum productivity, increased efficiency, and highest availability can be leveraged throughout the system's lifecycle – from planning, design, and engineering to operation, maintenance, and all the way even to modernization.

With Integrated Drive Systems, assets become important success factors. They ensure shorter time to market, maximum productivity and efficiency in operation, and shorter time to profit.

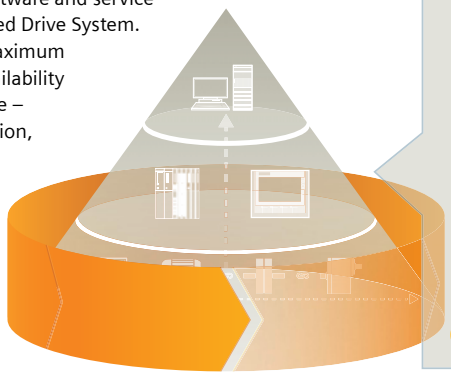

With Integrated Drive Systems you can reduce your maintenance costs by up to

15%

www.siemens.com/ids

© Siemens AG 2017

Introduction

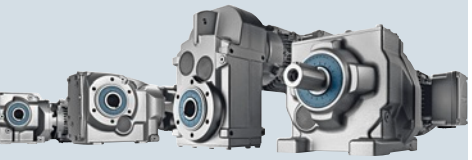

1/2 Orientation
1/2 Overview
1/2 • Geared motors
1/4 • Benefits
1/5 • Integration
1/6 • Configuring
1/6 – Drive Technology Configurator (DT Configurator)
1/6 – Access to the DT Configurator
1/6 – STARTER commissioning tool
1/6 – SINAMICS Startdrive commissioning tool
1/6 – SIZER for Siemens Drives

1/7 Guidelines for selection and ordering
1/7 Article No. code
1/9 Type designations
1/11 Designs
Notes on selection tables
1/17 Structure of the tables for geared motors up to 55 kW
1/18 Structure of the tables for transmission ratios and torques
1/18 Structure of the efficiency tables
1/19 Structure of the motor power tables
1/21 Notes on dimensional drawings

1/22 General technical specifications
Geared motors for use worldwide
1/22 Overview
1/23 Motors for the North American market
1/23 Motors for the Chinese market
1/24 Motors for the Eurasian market
1/24 Without CE marking for export
1/24 Explosion protection according to ATEX
General information regarding efficiency in accordance with International Efficiency
1/25 Efficiency classes acc. to IEC 60034-30-1
Noise
1/27 Geared motor noise
1/27 Motor noise in line operation
Direction of rotation
1/27 Overview

© Siemens AG 2017

Geared motors

SIMOGEAR is the new generation of geared motors from Siemens. SIMOGEAR geared motors are available as helical, parallel shaft, bevel, helical worm and worm geared motors.

State-of-the-art production technology and improved testing methods ensure the highest degree of quality and reliability.

Gearbox type	Gearbox designation	Number of frame sizes	Maximum output torque T_{2N} Nm	Transmission ratio i -	Maximum motor power[1] P_1 kW
Helical geared motors					
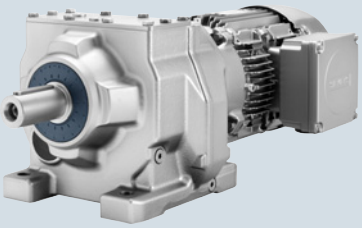	Z19 … Z189 (2-stage)	13	100 ... 19 000	3.4 … 57	55
	D19 … D189 (3-stage)	13	100 ... 19 000	36 … 328	55
Fig. 1/1 Helical geared motor D/Z					
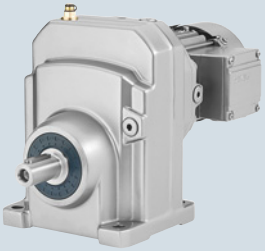	E39 … E149 (1-stage)	7	30 ... 1 490	1.29... 9.79	55
Fig. 1/2 Helical geared motor E					
Parallel shaft geared motors					
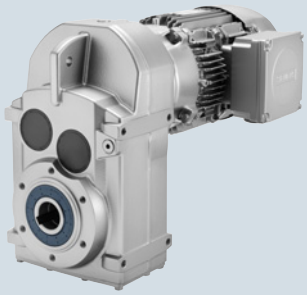	FZ29 … FZ189 (2-stage)	11	150 … 19 000	4 … 48	55
	FD29 … FD189 (3-stage)	11	150 … 19 000	58 … 377	55
Fig. 1/3 Parallel shaft geared motor FD/FZ					
Bevel geared motors					
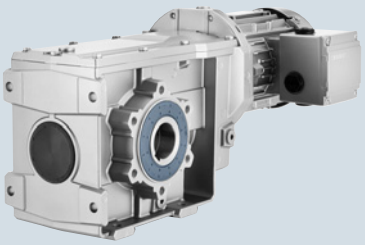	B19 … B49 (2-stage)	4	50 … 450	3.6 … 59	7.5
Fig. 1/4 Bevel geared motor B					

[1] With 4-pole motor for a 50 Hz line frequency in integral type of construction

© Siemens AG 2017

Geared motors

Gearbox type	Gearbox designation	Number of frame sizes	Maximum output torque T_{2N} Nm	Transmission ratio i -	Maximum motor power[1] P_1 kW
Bevel geared motors					
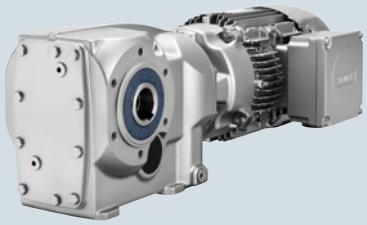	K39 … K189 (3-stage)	10	150 … 19 500	5.7 … 237	55

Fig. 1/5 Bevel geared motor K

Helical worm geared motors					
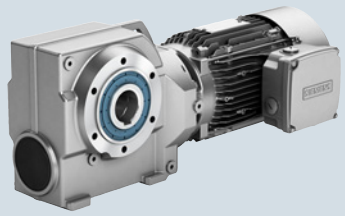	C29 … C89 (2-stage)	5	61 … 1 450	6.5 ... 363	7.5

Fig. 1/6 Helical worm geared motor C

Worm geared motors					
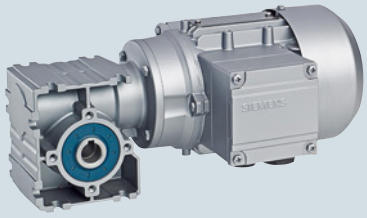	S09 … S29 (1-stage)	3	33 ... 116	5.0 ... 100	0.55
Tandem geared motors					
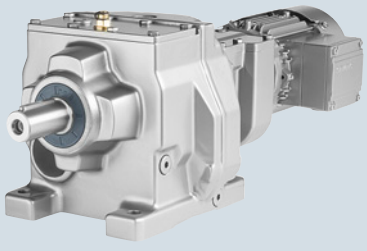	D-29-Z19 ... D.189-D69 (4-stage to 6-stage)	12	140 ...19 000	325 ... 27 816	7.5
	FZ.29-Z19 ... FD.189-D69 (4-stage to 6-stage)	11	150 … 19 000	274 … 29 900	7.5
	K.39-D/Z19 … K189-DZ69 (5-stage or 6-stage)	10	220 … 19 500	170 … 14 900	7.5
	C.29-D/Z19 … C.89-D/Z39 (4-stage or 5-stage)	5	80 … 1 310	270 … 19 000	7.5

Fig. 1/7 Example of a tandem geared motor

[1] With 4-pole motor for a 50 Hz line frequency in integral type of construction

© Siemens AG 2017

Geared motors (continued)

Torque classes

SIMOGEAR geared motors are classified according to fixed torque steps.

Within a torque class, for the various gearbox types, almost the same output torques are achieved.

Helical gearboxes Z and D (2-stage and 3-stage)															
Frame size		-	19	29	39	49	59	69	79	89	109	129	149	169	189
Maximum output torque	Nm	-	100	140	200	320	450	600	840	1 680	3 100	5 000	8 000	14 000	19 000
Helical gearbox E (1-stage)															
Frame size		-	-	-	39	49	-	69	-	89	109	129	149	-	-
Maximum output torque	Nm	-	-	-	65	108	-	205	-	365	565	800	1 490	-	-
Parallel shaft gearboxes FZ and FD (2-stage and 3-stage)															
Frame size		-	-	29	39	-	49	69	79	89	109	129	149	169	189
Maximum output torque	Nm	-	-	150	290	-	480	600	1 000	1 850	3 100	4 850	8 000	13 600	19 000
Bevel gearbox B (2-stage)															
Frame size		-	19	29	39	-	49	-	-	-	-	-	-	-	-
Maximum output torque	Nm	-	50	110	250	-	450	-	-	-	-	-	-	-	-
Bevel gearbox K (3-stage)															
Frame size		-	-	-	39	-	49	69	79	89	109	129	149	169	189
Maximum output torque	Nm	-	-	-	220	-	420	600	820	1 600	2 900	4 400	8 000	13 000	19 500
Helical worm gearbox C (2-stage)															
Frame size		-	-	29	39	-	49	69	-	89	-	-	-	-	-
Maximum output torque	Nm	-	-	110	235	-	400	675	-	1 450	-	-	-	-	-
Worm gearbox S (1-stage)															
Frame size		09	19	29	-	-	-	-	-	-	-	-	-	-	-
Maximum output torque	Nm	33	72	116	-	-	-	-	-	-	-	-	-	-	-

Benefits

High energy efficiency for a fast return on investment

When developing SIMOGEAR geared motors, significant emphasis was placed on achieving the highest possible energy efficiency.

Using the plug-on pinion principle in the first SIMOGEAR gearbox stage, higher transmission ratios are achieved when compared to gearboxes with slip-on pinion.

This means that frequently instead of 3-stage gearboxes with an efficiency of approx. 94 %, 2-stage helical and parallel shaft gearboxes with a high efficiency of ≥ 96 % can be used.

2-stage SIMOGEAR bevel geared motors B have a mechanical efficiency of ≥ 96 %. With a range of transmission ratios from i = 3.5 to 60, they have been specifically designed to address the requirements in conveyor technology.

Together with the new Siemens 1LE1 motors for efficiency classes IE2 (High Efficiency) and IE3 (Premium Efficiency), SIMOGEAR geared motors allow a high amount of energy to be saved and reduce the stress on our environment.

Extremely compact and low weight for easy handling in the machine or system in the smallest space

An integrated end shield instead of an adapter plate and end shield reduces the weight and space required in your machine or system. In addition, interfaces and sealing joints are reduced as a result of the integrated end shield.

With the SIMOGEAR bevel gearboxes, the length was able to be significantly reduced through an optimized bearing design.

SIMOGEAR helical gearboxes D/Z29 to D/Z39 (200 Nm), parallel shaft gearboxes F29 (150 Nm), bevel gearboxes B19 to B49 (450 Nm) and helical worm gearboxes C29 (100 Nm) have an aluminum gearbox housing.

Harmoniously coordinated modular system to provide the optimum solution for your particular drive task

The fine frame size graduations of SIMOGEAR gearboxes provide you the optimum drive for every application regarding gearbox type, rated output torque and transmission ratio.

When developing SIMOGEAR geared motors, significant emphasis was placed on achieving well-balanced gearbox properties.

With SIMOGEAR geared motors you can depend on harmonized and coordinated properties regarding:

- Maximum output torque
- Permissible radial force
- Output shaft diameter
- Bearing service life
- Housing stiffness
- Gearing reliability (fatigue endurable)
- Shaft strength (fatigue endurable)

© Siemens AG 2017

Benefits (continued)

Fine scaling of transmission ratios for the right output speed for any application

With their wide range of transmission ratios, from very low up to very high, SIMOGEAR geared motors provide the necessary flexibility for your drive application.

As a result of the wide ratio range, 4-pole induction motors can be mainly used – the most cost-effective solution.

Further, the gearboxes are quieter as a result of the lower circumferential velocity of the first gearbox stage.

Intelligent sealing concept for easy maintenance

An optimally coordinated sealing concept is available for the SIMOGEAR gearbox output shaft to address the various application areas and ambient conditions.

Gearbox sizes 19 and 29 are lubricated for life.
All SIMOGEAR geared motors with venting have as standard a pressure breather valve.

The MODULOG modular principle for outstanding flexibility

The motors used for the SIMOGEAR geared motors have a modular design using our well-proven MODULOG modular principle.

At the heart of the system is a basic motor dimensioned for international line supply conditions with power ratings extending from 0.09 up to 55 kW (4/2/6/8-pole).

At the non-drive end (NDE), you have an individually configurable MODULOG modular system, e.g. for brakes, backstop, rotary pulse encoder, separately driven fan and canopy.

This guarantees high availability as well as short delivery times.

Integration

SIMOGEAR geared motors are part of the Siemens Integrated Drive System (IDS).

Siemens Integrated Drive System (IDS) stands for standardized, tailored and modular components, systems and services.
It encompasses the world's most extensive portfolio – from geared motors through motor starters and inverters, identification systems and switchgear up to the automation.

The complete portfolio is exhaustively tested – also in the field – for maximum availability. The components are harmonized and coordinated with one another with standard interfaces and power bus systems.

Siemens Integrated Drive System (IDS) therefore allows you to reduce your installation and commissioning costs, and at the same time increase flexibility and system availability.

Energy-efficient motors, motor starters, soft-starters and inverters as well as the Power Management system based on SIMATIC PCS 7, SIMATIC WinCC and multi-function measuring devices ensure a high energy saving potential.

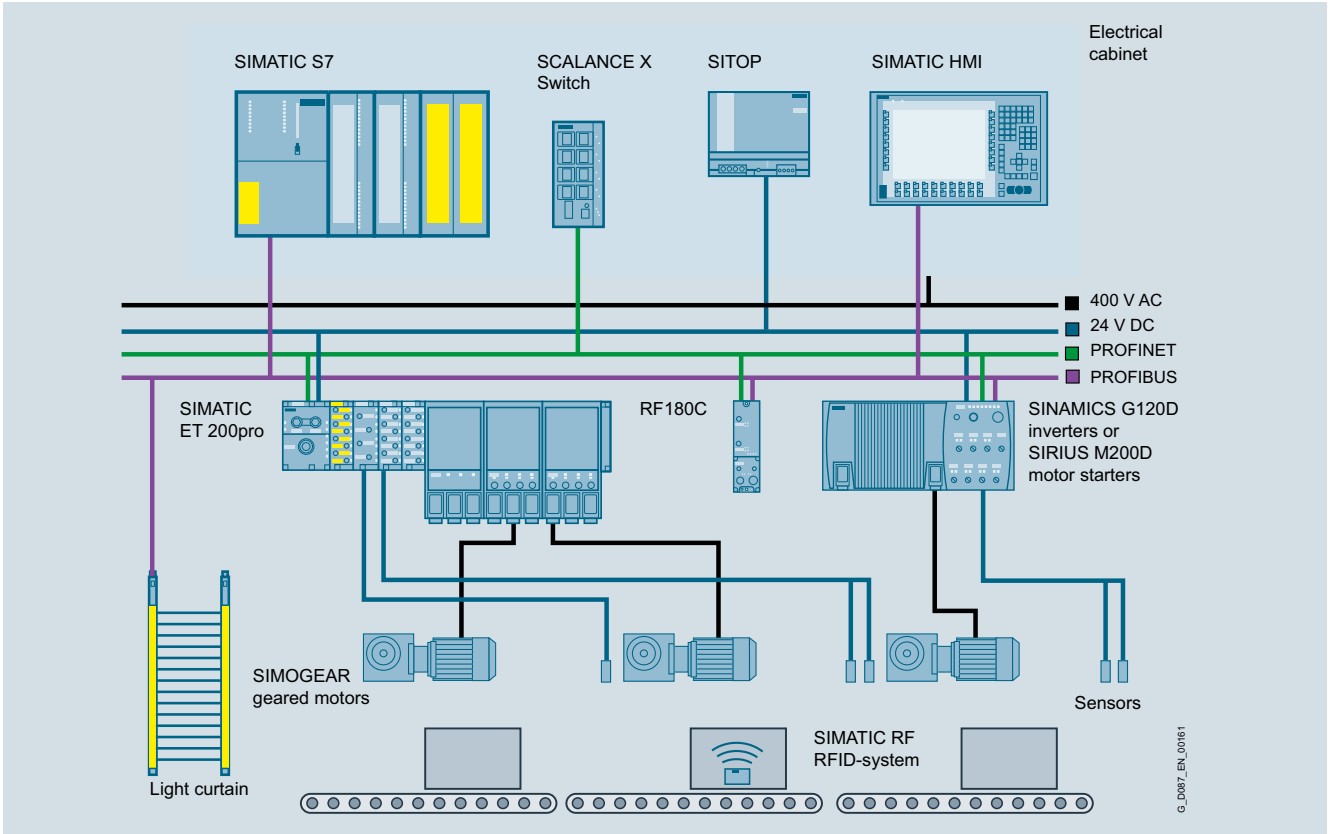

Fig. 1/8 Example of the Siemens Integrated Drive System (IDS) for sophisticated conveyor applications

© Siemens AG 2017

Configuration

Drive Technology Configurator (DT Configurator) within the CA 01

The Interactive Catalog CA 01 – the offline Industry Mall of Siemens on DVD-ROM – contains over 100 000 products with approximately 5 million possible drive system product variants. The Drive Technology Configurator (DT Configurator) has been developed to facilitate selection of the correct geared motor and/or inverter from the wide spectrum of drives. It is integrated as a selection tool in Catalog CA 01.

Description	Article No.
Interactive Catalog CA 01 on DVD-ROM including Drive Technology Configurator, English	**E86060-D4001-A510-D7-7600**

Drive Technology Configurator (DT Configurator)

The Drive Technology (DT) Configurator supports you when configuring the optimum drive technology products for your application – from gearboxes, motors, inverters as well as the associated options and components through to controllers, software licenses and connection systems. With or without detailed knowledge of products: Preselected product groups, targeted navigation through selection menus and direct product selection through entry of the article number support quick, efficient and convenient configuration.

In addition to all this, comprehensive documentation comprising technical data sheets, 2D dimensional drawings/3D CAD models, operating instructions, certificates, etc. can be selected in the DT Configurator. Immediate ordering is possible by simply transferring a parts list to the shopping cart of the Industry Mall.

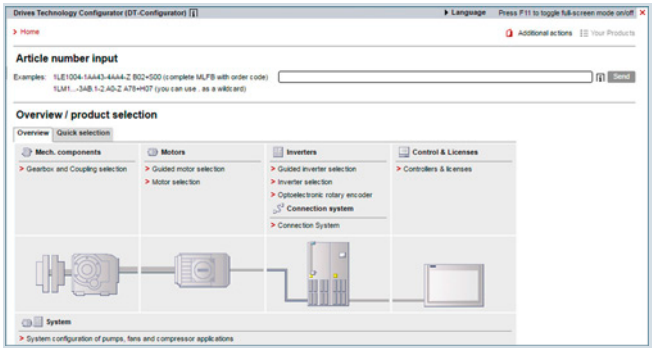

Fig. 1/9 DT Configurator

Drive Technology Configurator for efficient drive configuration with the following functions

- Fast, efficient configuration of drive products and associated components – gearboxes, motors, inverters, controllers, connection systems
- Configuration of drive systems for pumps, fans and compressor applications from 1 kW to 2.6 MW
- Displayable documentation for configured products and components, such as
  - Data sheets in PDF or RTF format
  - 2D dimensional drawings/3D CAD models in various formats
  - Operating instructions
  - Certificates
  - Start-up calculation for SIMOTICS motors
- Support with retrofitting in conjunction with Spares On Web (www.siemens.com/sow)
- Ability to order products directly in the Siemens Industry Mall

Access to the Drive Technology Configurator

The Drive Technology Configurator can be called up without registration and without a login:
www.siemens.com/dt-configurator

STARTER commissioning tool

The STARTER commissioning tool (V4.3 SP3 and higher) simplifies the commissioning and maintenance of the SINAMICS G110M motor integrated frequency inverter. The operator guidance combined with comprehensive, user-friendly functions for the relevant drive solution allow you to commission the device quickly and easily.

Additional information about the STARTER commissioning tool is available on the Internet at:
www.siemens.com/starter

SINAMICS Startdrive commissioning tool

SINAMICS Startdrive is a tool for configuring, commissioning, and diagnosing the SINAMICS family of drives and is integrated into the TIA Portal. SINAMICS Startdrive can be used to implement drive tasks with the SINAMICS G110M (SINAMICS Startdrive V13 and higher), SINAMICS G120, SINAMICS G120C, SINAMICS G120D and SINAMICS G120P inverter series. The commissioning tool has been optimized with regard to user friendliness and consistent use of the TIA Portal benefits of a common working environment for PLC, HMI and drives.

The SINAMICS Startdrive commissioning tool is available free on the Internet at:
www.siemens.com/startdrive

SIZER for Siemens Drives

For the project engineering of SIMOGEAR geared motors operating on SINAMICS frequency inverters, the engineering tool "Sizer for Siemens Drives" should be used. This ensures that all the relevant aspects are taken into consideration (line voltage, type of DC link (regulated/unregulated), utilization of the motor in accordance with temperature class B or F, motor current for inverter operation in Y circuit or D circuit, calculation of the regenerative power, dimensioning of the braking resistor with reference to the entered cyclic operation, etc.)

The SIZER for Siemens Drives engineering tool is available free on the Internet at:
www.siemens.com/sizer

© Siemens AG 2017

Overview

The Article No. comprises a combination of digits and letters. To obtain a better overview, the Article No. is split up into three, hyphenated blocks.

Example:

2KJ3105-1EM22-2AS1-Z +D01+M55

The first block (data positions 1 to 7) designates the gearbox type; the second (data positions 8 to 12) designates the output shaft and the motor type; and additional design characteristics are coded in the third block (data positions 13 to 16).

Ordering data

- Complete Article No., with a **-Z** suffix, and order code(s) or plain text.
- If a quotation has been requested, please specify the quotation number in addition to the Article No.
- When ordering a complete geared motor as a replacement unit, the serial number of the original geared motor must be specified.

Structure of the Article No.

Position of the Article No.		1	2	3	4	5	6	7	-	8	9	10	11	12	-	13	14	15	16	-	Z
SIMOGEAR geared motors																					
1st to 5th position: Digit, letter, Letter, digit, digit	Helical gearbox E, 1-stage	**2**	**K**	**J**	**3**	**0**															
	Helical gearbox Z, 2-stage	**2**	**K**	**J**	**3**	**1**															
	Helical gearbox D, 3-stage	**2**	**K**	**J**	**3**	**2**															
	Parallel shaft gearbox FZ, 2-stage	**2**	**K**	**J**	**3**	**3**															
	Parallel shaft gearbox FD, 3-stage	**2**	**K**	**J**	**3**	**4**															
	Bevel gearbox B, 2-stage	**2**	**K**	**J**	**3**	**5**															
	Bevel gearbox K, 3-stage	**2**	**K**	**J**	**3**	**5**															
	Helical worm gearbox C, 2-stage	**2**	**K**	**J**	**3**	**6**															
	Worm gearbox S, 1-stage	**2**	**K**	**J**	**3**	**7**															
6th to 7th position: Digit, digit	Gearbox size																				
8th position: Digit	Output shaft								-												
9th to 10th position: Letter, letter	Motor frame size																				
11th position: Digit	Induction motor LA												**1**								
	Induction motor LE General Purpose (aluminum)												**2**								
	Induction motor LES Severe Duty; Basic Line (cast iron)												**3**								
12th position: Digit	Motor with improved efficiency (Standard Efficiency IE1)													**1**							
	Motor with high efficiency (High Efficiency IE2)													**2**							
	Motor with premium efficiency (Premium Efficiency IE3)													**3**							
13th position: Digit	Frequency, voltage														-						
14th position: Letter	Foot-mounted design																**A**				
	Foot/flange-mounted design																**B**				
	Torque arm Bevel gearbox K																**C**				
	Torque arm Parallel shaft gearbox F, bevel gearbox B Helical worm gearbox C Worm gearbox S																**D**				
	Flange-mounted design																**F**				
	Housing flange design																**H**				
15th to 16th position: Letter, digit	Transmission ratio																				
Special designs																					
Coded	Order code required																			-	**Z**
Non-coded	Plain text required																				

© Siemens AG 2017

Overview (continued)

Ordering example

A helical geared motor is required:

- Gearbox type, frame size Z59
- Motor 1.5 kW, 4-pole with 50 Hz line frequency
- Output speed 49, transmission ratio *i* = 28.89
- Solid shaft V35 x 70
- Mounting position M1
- Terminal box position 1A

This results in the following Article No. with order codes:

Position of the Article No.		1	2	3	4	5	6	7	-	8	9	10	11	12	-	13	14	15	16	-	Z	+	Order codes		
Selection criteria	Requirements																								
Gearbox type	Helical gearbox Z, 2-stage	**2**	**K**	**J**	**3**	**1**	.	.	-	■	.	.	■	■	-	■	■	■	■	-	■	+	.	+	.
Gearbox size	Size 59	**2**	**K**	**J**	**3**	**1**	**0**	**5**																	
Output shaft	Solid shaft V35 x 70	**2**	**K**	**J**	**3**	**1**	**0**	**5**	-	**1**															
Motor frame size	Frame size 90; 1.5 kW; 4-pole	**2**	**K**	**J**	**3**	**1**	**0**	**5**	-	**1**	**E**	**M**													
Motor type	Induction motor LE General Purpose	**2**	**K**	**J**	**3**	**1**	**0**	**5**	-	**1**	**E**	**M**	**2**												
Motor efficiency	High Efficiency IE2	**2**	**K**	**J**	**3**	**1**	**0**	**5**	-	**1**	**E**	**M**	**2**	**2**											
Line voltage, frequency	230 V Δ/400 V Y // 460 V Y, 50//60 Hz	**2**	**K**	**J**	**3**	**1**	**0**	**5**	-	**1**	**E**	**M**	**2**	**2**	-	**2**									
Mounting type	Foot-mounted design	**2**	**K**	**J**	**3**	**1**	**0**	**5**	-	**1**	**E**	**M**	**2**	**2**	-	**2**	**A**								
Transmission ratio	*i* = 28.89	**2**	**K**	**J**	**3**	**1**	**0**	**5**	-	**1**	**E**	**M**	**2**	**2**	-	**2**	**A**	**S**	**1**						
Mounting position	M1	**2**	**K**	**J**	**3**	**1**	**0**	**5**	-	**1**	**E**	**M**	**2**	**2**	-	**2**	**A**	**S**	**1**	-	**Z**	+	**D01**		
Terminal box position	1A	**2**	**K**	**J**	**3**	**1**	**0**	**5**	-	**1**	**E**	**M**	**2**	**2**	-	**2**	**A**	**S**	**1**	-	**Z**	+	**D01**	+	**M55**

© Siemens AG 2017

Type designation of the gearboxes

The type designation is a meaningful name for SIMOGEAR geared motors.

It provides information about the fundamental design of the geared motor and about its main technical features.

Example of gearbox type designation:	F	D	A	F	S	W	89	-	Z	39
Gearbox type										
Helical gearbox	**-**									
Parallel shaft gearbox	**F**									
Bevel gearbox, 2-stage	**B**									
Bevel gearbox, 3-stage	**K**									
Helical worm gearbox	**C**									
Worm gearbox	**S**									
Stage										
1-stage (for helical gearbox only)		**E**								
2-stage		**Z**						-		
3-stage		**D**								
Type										
Shaft										
Solid shaft			**-**							
Hollow shaft			**A**							
Plug-in shaft			**E**							
Mounting										
Foot-mounted design				**-**						
Foot/flange-mounted design				**B**						
Flange-mounted design				**F**						
Housing flange design				**Z**						
Torque arm				**D**						
Connection										
Feather key / without feather key					**-**					
Shrink disk					**S**					
Splined shaft					**T**					
SIMOLOC assembly system					**R**					
Special features										
Reduced-backlash version					-	**W**				
Gearbox size										
Helical gearbox, 1-stage							**39 ... 149**			
Helical gearbox, 2-stage/3-stage							**19 ... 189**			
Parallel shaft gearbox, 2-stage/3-stage							**29 ... 189**			
Bevel gearbox, 2-stage							**19 ... 49**			
Bevel gearbox, 3-stage							**39 ... 189**			
Helical worm gearbox, 2-stage							**29 ... 89**			
Worm gearbox, 1-stage							**09 ... 29**			
Gearbox type - intermediate gearbox										
Helical gearbox								-	**-**	
Stage - intermediate gearbox										
2-stage								-	**Z**	
3-stage								-	**D**	
Gearbox size										
Helical gearbox, 2-stage/3-stage										**19 ...69**

© Siemens AG 2017

Type designation of the motors

Example of motor type designation:			LE	90	ZLR	-	4	P	MFW	L	32/14	MN	IA	SI04
Definition of motor														
Motor type	Three-phase motor	Aluminum housing	**LA, LE**											
		Cast iron housing	**LES**											
Type	Integral mounting		**-**											
	IEC B14 flange		**I**											
Motor frame size	Specified acc. to EN 50347			**63 ... 250**										
Overall length	Extended housing				**Z**									
	Overall length specified acc. to EN 50347				**S, L, M**									
	Packet length / power value				**A ... Z**									
Number of poles	2-pole						**2**							
	4-pole						**4**							
	6-pole						**6**							
	8-pole						**8**							
Special features														
Efficiency class	Different to IE2 or IE3							**-**						
	IE2 (High Efficiency)							**E**						
	IE3 (Premium Efficiency)							**P**						
SINAMICS G110M	With motor integrated frequency inverter SINAMICS G110M								**M**					
Ventilation	Self ventilation								**-**					
	Forced ventilation								**F**					
	High inertia fan								**I**					
Canopy	With canopy								**W**					
Handwheel	With handwheel								**D**					
Backstop	With backstop								**X**					
Brake														
Brake type	DC brake									**L, FDX**				
Rated braking torque	L brakes										**4 ... 400**			
	FDX brakes										**30, 40**			
	Adjusted braking torque										**/1.4 ... 1 000**			
Brake options														
	Microswitch for monitoring brake release											**M**		
	Standard version											**N**		
	Enclosed brake											**G**		
	Manual brake release											**H**		
	Manual brake release with locking mechanism											**HA**		
Encoder														
	Incremental encoder												**IN**	
	Resolver												**IR**	
	Absolute encoder												**IA**	
	Prepared for encoder mounting												**IV**	
Functional safety														
	Functionally safe rotary encoder													**SI04**

© Siemens AG 2017

Overview

Helical geared motors

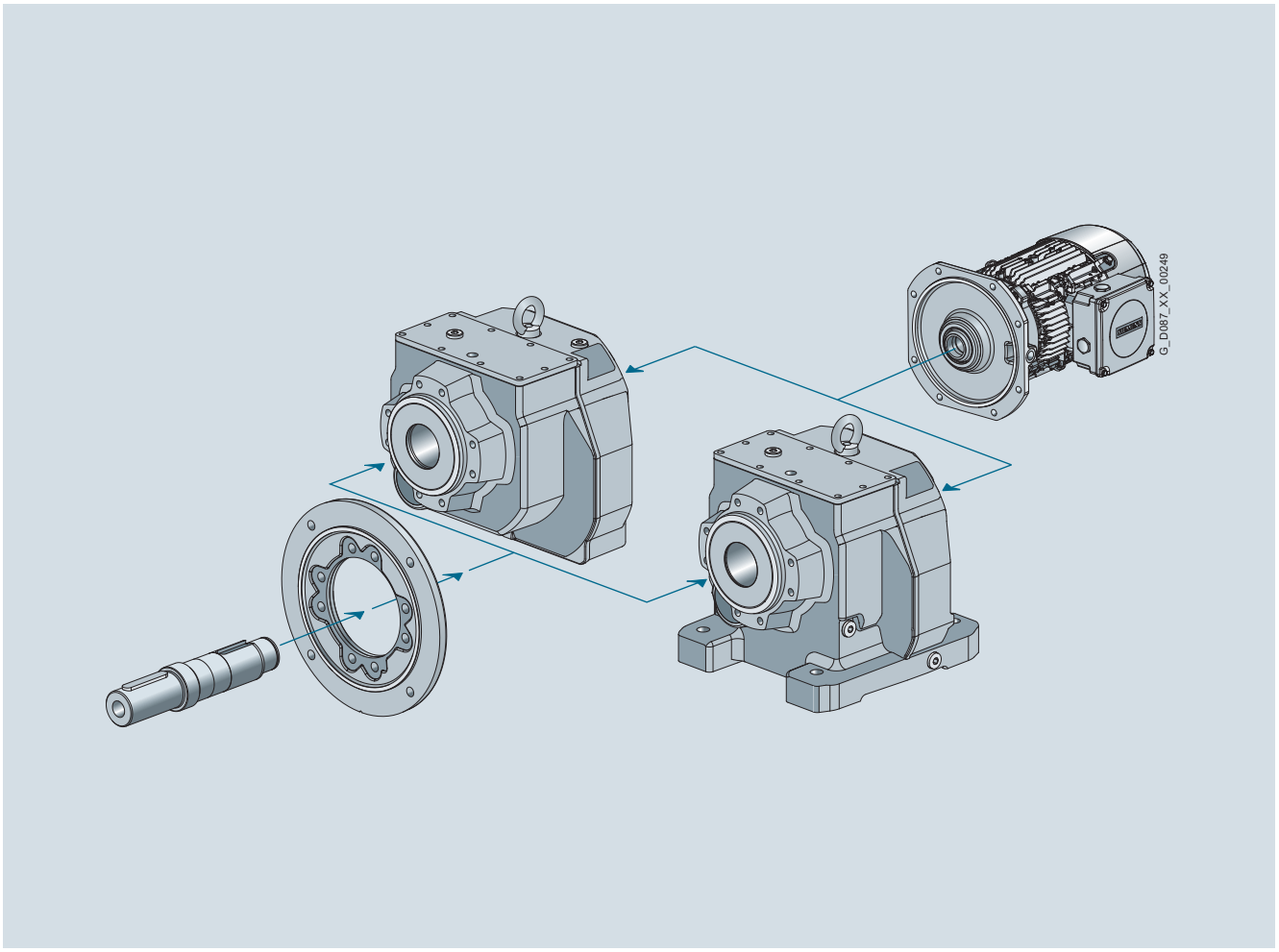

Fig. 1/10 Modular system, helical geared motor

SIMOGEAR helical geared motors are available in the following versions for mounting in any position:

- 2 or 3 stages
- 1 stage for high output speeds
- 4 to 6 stages for especially low output speeds
- Foot-mounted design
- Flange-mounted design
- Design with integrated housing flange
- Combined foot/flange-mounted design (frame size 29 to 89)
- Solid shaft design with and without feather key

© Siemens AG 2017

Overview (continued)

Parallel shaft geared motors

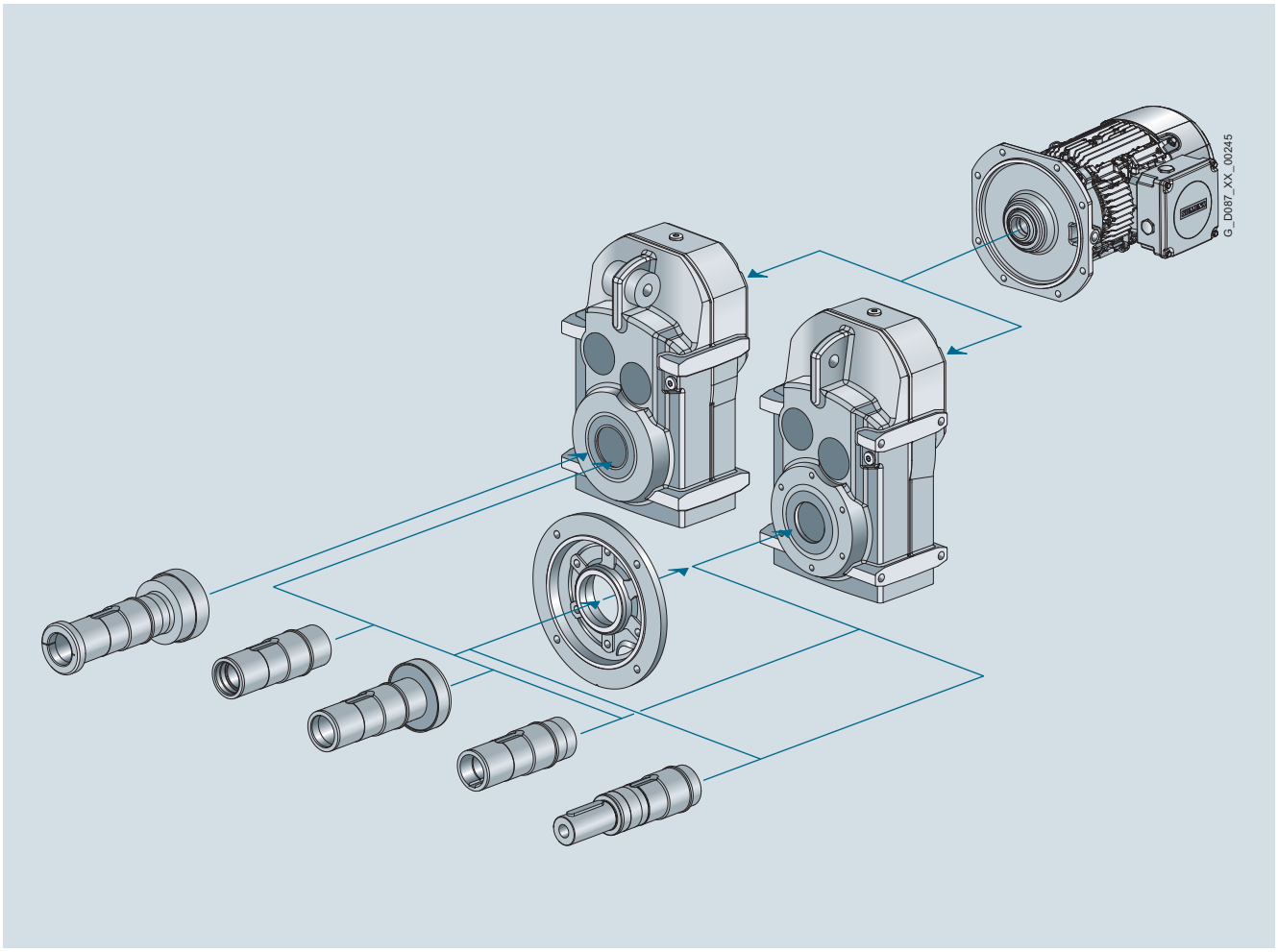

Fig. 1/11 Modular system, parallel shaft geared motor

SIMOGEAR parallel shaft geared motors are available in the following versions for mounting in any position:

- 2 or 3 stages
- 4 to 6 stages for especially low output speeds
- Shaft-mounted design with torque arm
- Flange-mounted design
- Design with integrated housing flange
- Foot-mounted design
- Hollow shaft design with feather key, splined shaft, shrink disk or SIMOLOC assembly system
- Solid shaft design with and without feather key

© Siemens AG 2017

Overview (continued)

Bevel geared motors B

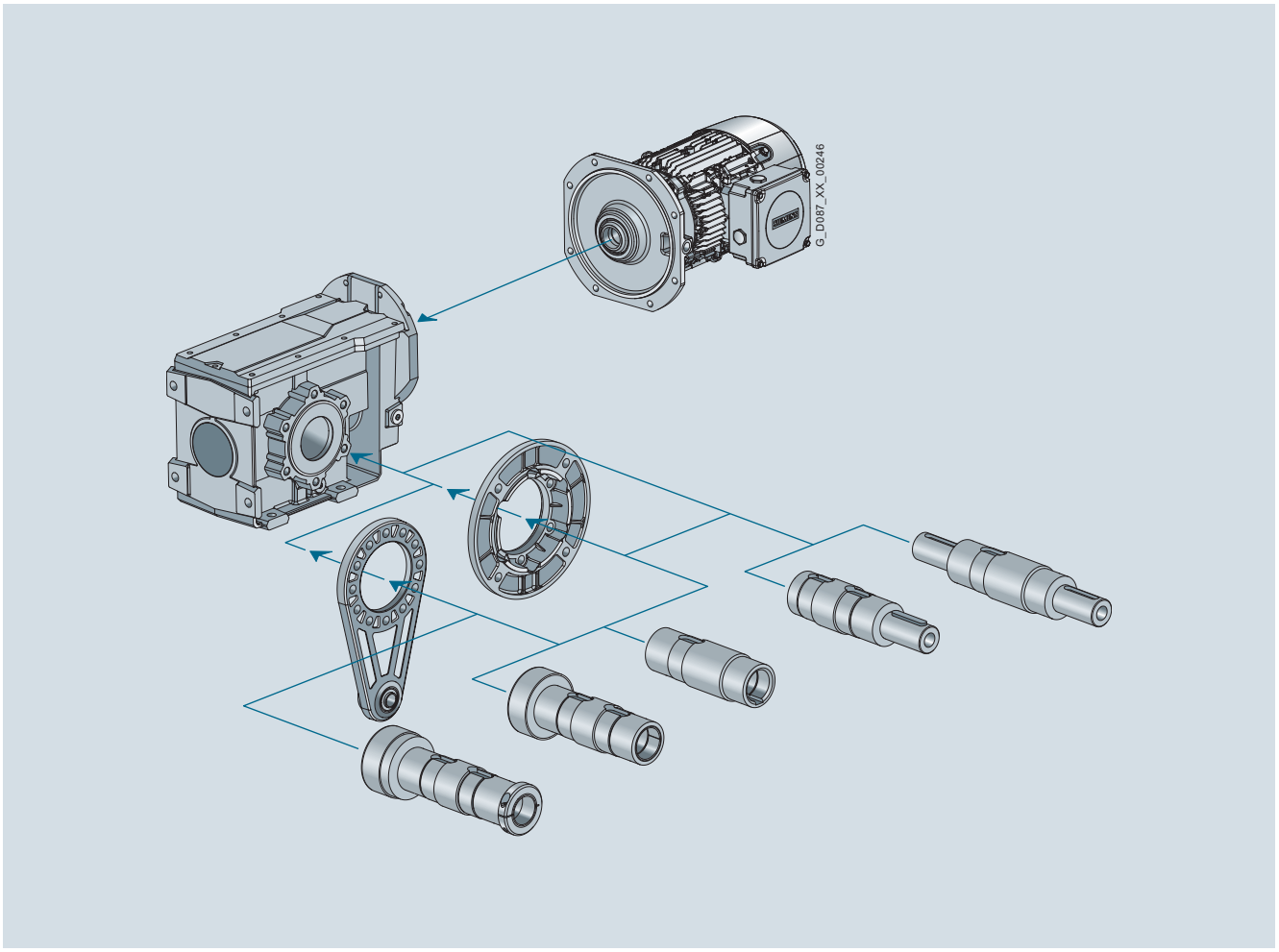

Fig. 1/12 Modular system, bevel geared motor B

SIMOGEAR bevel geared motors B are available in the following versions for mounting in any position:

- 2 stages
- Shaft-mounted design with torque arm
- Flange-mounted design
- Design with integrated housing flange
- Foot-mounted design
- Hollow shaft design with feather key, splined shaft, shrink disk or SIMOLOC assembly system
- Solid shaft design with and without feather key (at one end or both ends)

For 2-stage bevel gearboxes B, the torque arm is supplied loose to enable it to be mounted as required on site. The position of the torque arm can be freely selected.

© Siemens AG 2017

Overview (continued)

Bevel geared motors K

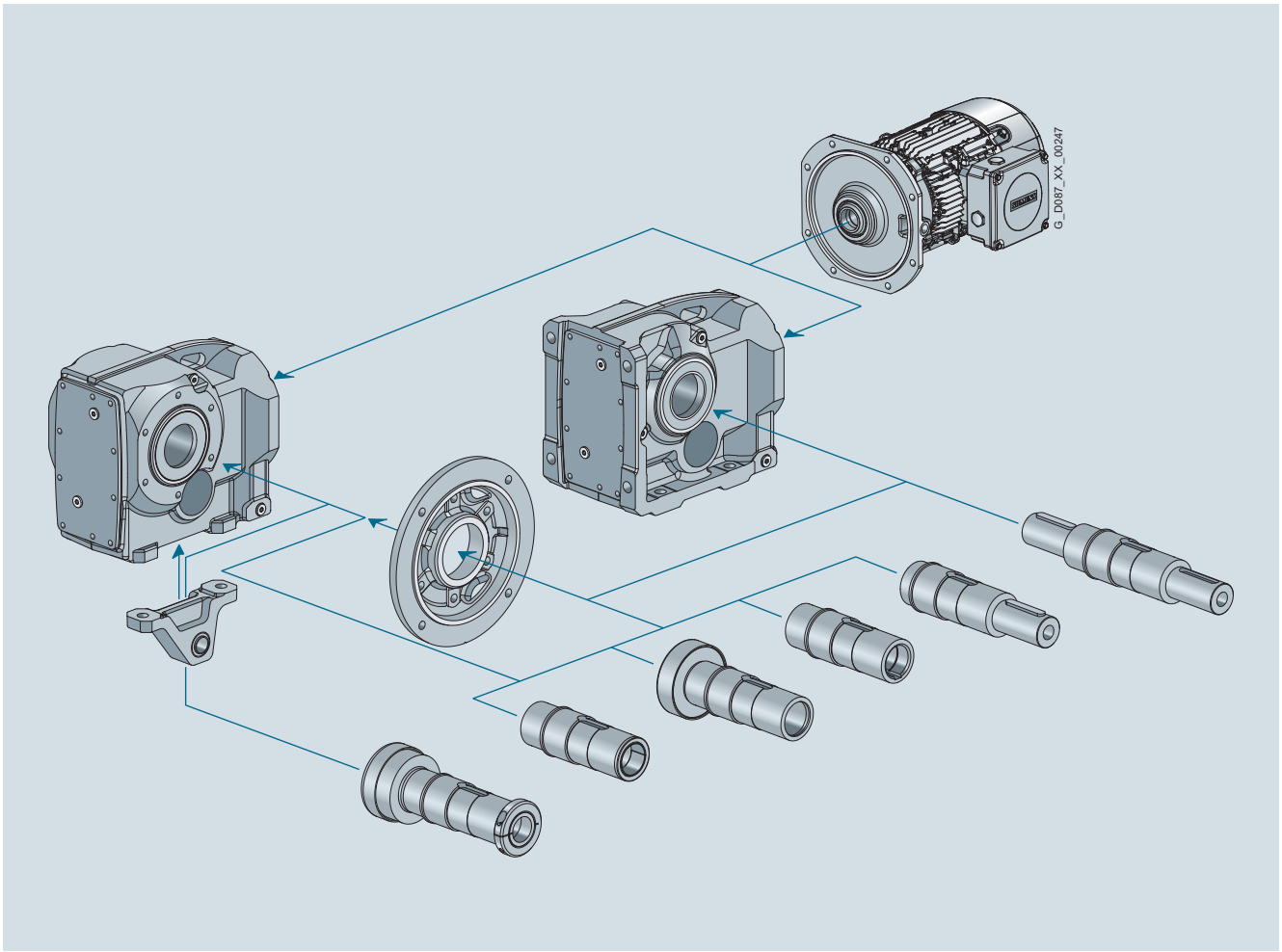

Fig. 1/13 Modular system, bevel geared motor K

SIMOGEAR bevel geared motors K are available in the following versions for mounting in any position:

- 3 stages
- 5 or 6 stages for very low output speeds
- Shaft-mounted design with torque arm
- Flange-mounted design
- Design with integrated housing flange
- Foot-mounted design
- Hollow shaft design with feather key, splined shaft, shrink disk or SIMOLOC assembly system
- Solid shaft design with and without feather key (at one end or both ends)

© Siemens AG 2017

Overview (continued)

Helical worm geared motors

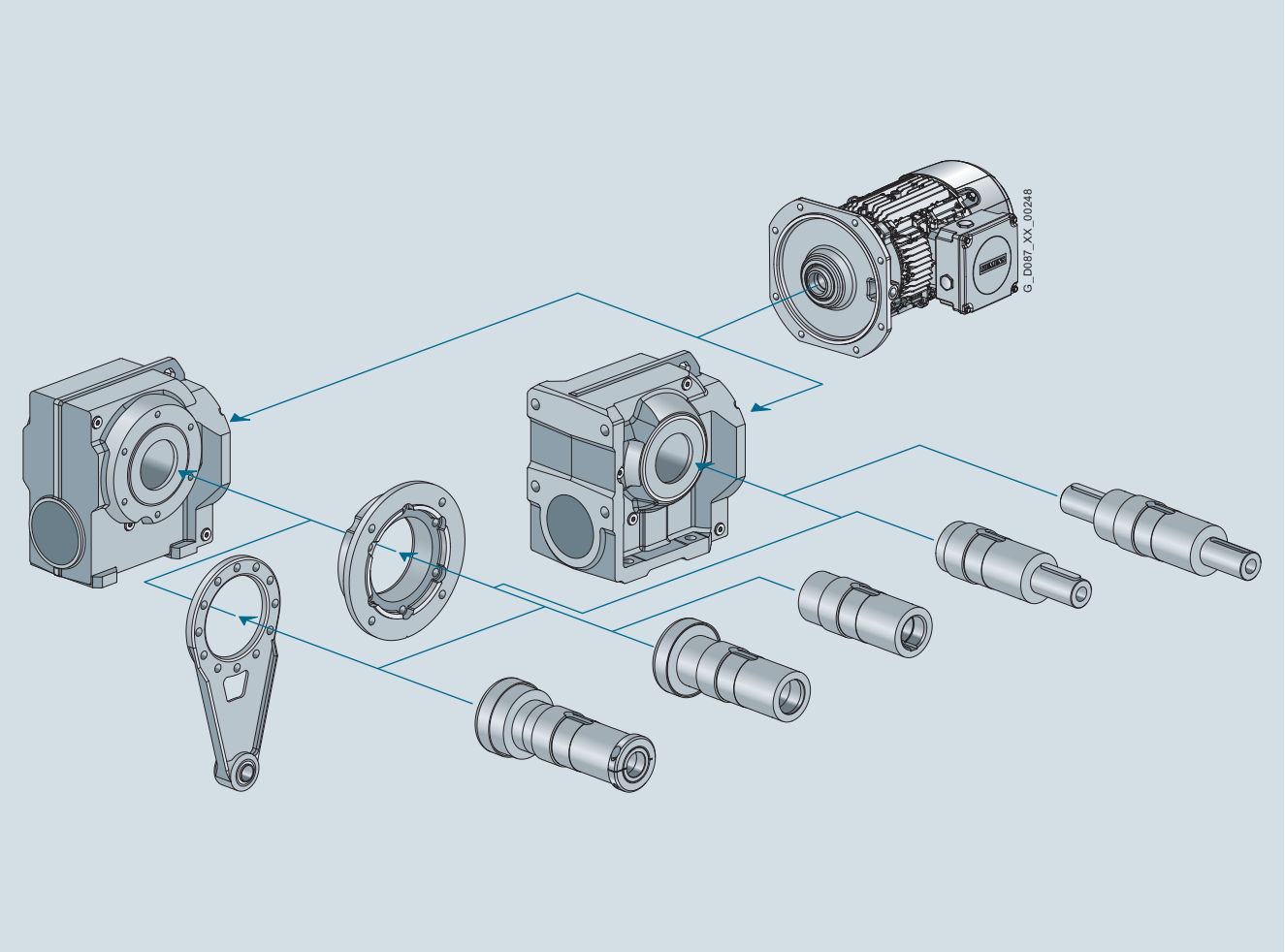

Fig. 1/14 Modular system, helical worm gearbox

SIMOGEAR helical worm gearboxes are available in the following versions for mounting in any position:

- 2 stages
- 4 or 5 stages for very low output speeds
- Shaft-mounted design with torque arm
- Flange-mounted design
- Design with integrated housing flange
- Foot-mounted design
- Hollow shaft design with feather key, shrink disk or SIMOLOC assembly system
- Solid shaft design with and without feather key (at one end or both ends)

For helical worm gearboxes, the torque arm is supplied loose to enable it to be mounted as required on site. The position of the torque arm can be freely selected.

© Siemens AG 2017

Overview (continued)

Worm geared motors

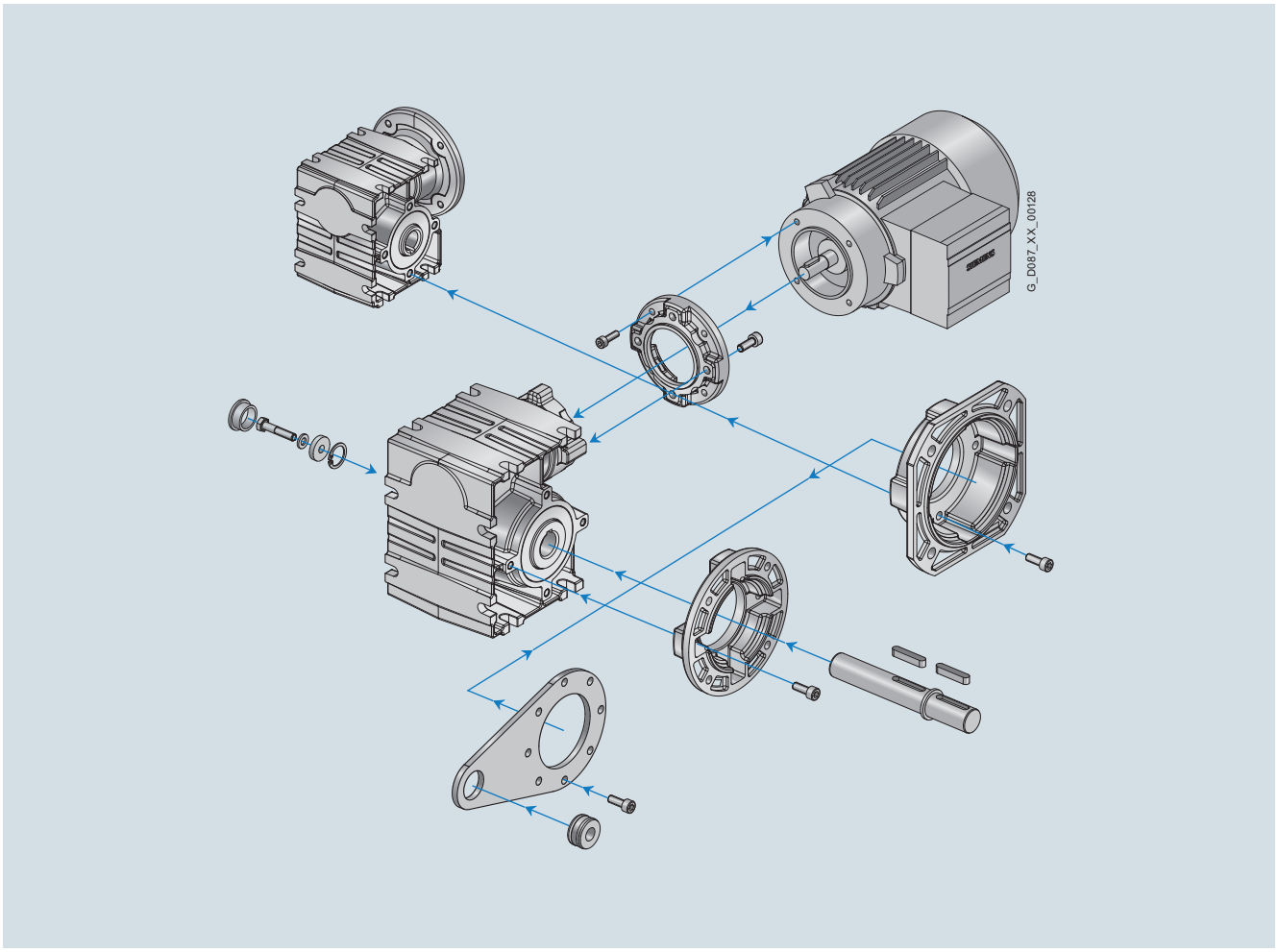

Fig. 1/15 Modular system, worm gearbox

SIMOGEAR worm gearboxes are available in the following versions for mounting in any position:

- 1 stage
- Shaft-mounted design with torque arm
- Flange-mounted design
- Design with integrated housing flange
- Foot-mounted design
- Solid shaft design with feather key (at one end or both ends)
- Hollow shaft design with feather key
- Hollow shaft design with plug-in shaft

For worm gearboxes, the torque arm is supplied loose to enable it to be mounted as required on site. The position of the torque arm can be freely selected.

© Siemens AG 2017

Structure of the tables for geared motors up to 55 kW

In the selection tables you will find the most frequently used versions and combinations of geared motors sorted according to the motor power. Additional combinations can be selected with our SIMOGEAR Configurator.

The power ratings and torques specified in the catalog refer to mounting position M1 and comparable types of construction, where the input stage does not run completely immersed in oil. Further, standard equipment and standard lubrication of the geared motors as well as normal ambient conditions are assumed.

The specified output speeds are guide values.
You can calculate the rated drive speed based on the rated motor speed and the transmission ratio. Please note that the actual output speed will depend on the motor load and the line supply conditions.

P_{rated}	n_2	T_2	i	F_{R2}	f_B	m	Article No.	Order code
kW	rpm	Nm	-	N	-	kg		Number of poles
0.37	**Type designation FD.49-LA71MH4**							
	13	270	105.10	8 640	1.8	27	**2KJ3403 - ■ CE11 - ■ ■ G1**	
⬇	⬇	⬇	⬇	⬇	⬇	⬇	⬇	⬇
(1)	(2)	(3)	(4)	(5)	(6)	(7)	(8)	(9)

(1) Rated motor power at 50 Hz
(2) Geared motor output speed
(3) Geared motor output torque
(4) Transmission ratio
(5) Permissible radial force at center of shaft extension (foot-mounted design with solid shaft)
(6) Service factor
(7) Drive weight without any oil
(8) Article No.
(9) Order code for pole number

© Siemens AG 2017

Structure of the tables for transmission ratios and torques

In the selection tables for transmission ratios and torques, the gearboxes are sorted according to gearbox type and ratio.

i	n_2	T_{2N}	F_{R2}	φ	J_G	R_{ex}	Motor frame size											Article No.
-	rpm	Nm	N		10^{-4} kgm²	-	63	71	80	90	100	112	132	160	180	200	225	250	
Type designation D.59																		
76.38	19	450	7 660	8	0.59	611/8	✓	✓	✓	✓	✓	✓	✓						**2KJ3205 - ■■■■ - E1**
⬇	⬇	⬇	⬇		⬇	⬇	⬇												⬇
(1)	(2)	(3)	(4)	(5)	(6)	(7)	(8)												(9)

(1) Transmission ratio

(2) Geared motor output speed at a motor speed of 1 450 rpm

(3) Maximum gearbox output torque with service factor $f_B = 1$

(4) Permissible radial force at center of shaft extension (foot-mounted design with solid shaft)

(5) Torsional backlash in minutes of arc for reduced-backlash version (order code G99)
If torsional backlash is not specified, the option "reduced-backlash version" is not possible with this transmission ratio.

(6) Moment of inertia of the gearbox reduced to the input shaft

(7) Ratio, number of teeth

(8) Geometrically possible geared motor combination

(9) Article No.

Structure of the efficiency tables

Left-hand side

	n_{mot} = 2 800 rpm				n_{mot} = 1 400 rpm				n_{mot} = 900 rpm				
i	n_2	T_{2N}	P_{mot}	η	n_2	T_{2N}	P_{mot}	η	n_2	T_{2N}	P_{mot}	η	Article No.
-	rpm	Nm	kW	%	rpm	Nm	kW	%	rpm	Nm	kW	%	
Type designation C.49													
127.64	22	300	0.95	73	11.0	355	0.56	73	7.1	355	0.37	71	**2KJ3603 - ■■■■■■ - ■■ F2**
⬇	⬇	⬇	⬇	⬇	⬇	⬇	⬇	⬇	⬇	⬇	⬇	⬇	⬇
(1)	(2)	(3)	(4)	(5)	(2)	(3)	(4)	(5)	(2)	(3)	(4)	(5)	(6)

(1) Transmission ratio

(2) Geared motor output speed at specified motor speed n_{mot}

(3) Maximum gearbox output torque with service factor $f_B = 1$

(4) Input power

(5) Efficiency

(6) Article No.

© Siemens AG 2017

Structure of the motor power tables

Motors with IE2 High Efficiency

Left-hand side

Frame size	Motor	P_{rated}	n_{rated}	T_{rated}	I_{rated}	cos φ	η		I_{St}/I_{rated}	Article No.				Order code
							4/4 load	3/4 load		Data position				Number of poles
		kW	rpm	Nm	A	-	%	%	-	9th	10th	11th	12th	
4-pole, 1 500 rpm at 50 Hz														
80	LE80MD4E	0.55	1 440	3.65	1.39	0.74	77.1	76.8	5.3	**D**	**C**	**2**	**2**	**-**
	LE80MH4E	0.75	1 440	4.97	1.79	0.76	79.6	79.9	5.6	**D**	**E**	**2**	**2**	**-**
2-pole, 3 000 rpm at 50 Hz														
80	LE80MA2E	0.75	2 805	2.55	1.67	0.84	77.4	79.5	4.9	**D**	**B**	**2**	**2**	**P00**
	LE80ME2E	1.10	2 835	3.71	2.40	0.83	79.6	81.3	6.0	**D**	**M**	**2**	**2**	**P00**
⬇	⬇	⬇	⬇	⬇	⬇	⬇	⬇	⬇	⬇	⬇	⬇	⬇	⬇	⬇
(1)	(2)	(3)	(4)	(5)	(6)	(7)	(8)	(8)	(9)	(10)	(10)	(11)	(12)	(13)

(1) Motor frame size
(2) Motor designation
(3) Rated power
(4) Rated speed
(5) Rated torque
(6) Rated current
(7) Power factor
(8) Efficiency
(9) Relative starting current
(10) Article No. of the motor frame size
(11) Article No. of the motor type
(12) Article No. of the motor series
(13) Order code for pole number

For different voltages, the starting, average acceleration and breakdown torque change acc. to a square law from their rated value.

Right-hand side

Frame size	Motor	T_{St}/T_{rated}	T_{Bk}/T_{rated}	T_A/T_{rated}	L_{pfA}	L_{WA}	Z_0	J_{mot}	m_{mot}	Article No.				Order code
										Data position				Number of poles
		-	-	-	dB (A)	dB (A)	1/h	10^{-4} kgm²	kg	9th	10th	11th	12th	
4-pole, 1 500 rpm at 50 Hz														
80	LE80MD4E	2.2	3.1	2.4	53	64	9 000	17	9.3	**D**	**C**	**2**	**2**	**-**
	LE80MH4E	2.2	3.1	2.4	53	64	9 000	21	10	**D**	**E**	**2**	**2**	**-**
2-pole, 3 000 rpm at 50 Hz														
80	LE80MA2E	1.9	2.3	2.0	60	71	6 000	8	8.3	**D**	**B**	**2**	**2**	**P00**
	LE80ME2E	2.7	3.1	2.9	60	71	6 000	11	10	**D**	**M**	**2**	**2**	**P00**
⬇	⬇	⬇	⬇	⬇	⬇	⬇	⬇	⬇	⬇	⬇	⬇	⬇	⬇	⬇
(1)	(2)	(3)	(4)	(5)	(6)	(7)	(8)	(9)	(10)	(11)	(11)	(12)	(13)	(14)

(1) Motor frame size
(2) Motor designation
(3) Relative starting torque
(4) Relative breakdown torque
(5) Relative average acceleration torque
(6) Measuring surface sound pressure level
(7) Sound power level
(8) No-load switching frequency
(9) Moment of inertia
(10) Weight (without end shield at DE)
(11) Article No. of the motor frame size
(12) Article No. of the motor type
(13) Article No. of the motor series
(14) Order code for pole number

© Siemens AG 2017

Structure of the motor power tables (continued)

NEMA Energy Efficient motors MG1

Left-hand side

Frame size	Motor	P_{rated}		n_{rated}	T_{rated}	EISA CC no.	I_{rated}	cosφ	η 4/4 load	η 3/4 load	I_{St}/I_{rated}	T_{St}/T_{rated}
		kW	hp	rpm	Nm	CC032A	A	-	%	%	-	-
4-pole, 1 800 rpm at 60 Hz, 50 Hz power												
80	LE80ZMQ4P	0.75	1.00	1 760	4.07	✓	1.53	0.71	85.50	84.50	8.30	3.10
2-pole, 3 600 rpm at 60 Hz, 50 Hz power												
80	LE80ME2P	0.75	1.00	3 480	2.06	✓	1.46	0.84	77.00	78.00	7.10	3.00
	LE80ZMJ2P	1.10	1.50	3 500	3	✓	1.98	0.83	84.00	84.00	8.40	3.30
		⬇ (1)	⬇ (2)	⬇ (3)	⬇ (3)	⬇ (4)	⬇ (5)	⬇ (6)	⬇ (7)	⬇ (8)	⬇ (9)	⬇ (9)	⬇ (10)	⬇ (11)

(1) Motor frame size
(2) Motor designation
(3) Rated power
(4) Rated speed
(5) Rated torque
(6) Energy Independence and Security Act
(7) Rated current
(8) Power factor
(9) Efficiency
(10) Starting current
(11) Relative starting torque

For different voltages, the starting, average acceleration and breakdown torque change acc. to a square law from their rated value.

Right-hand side

Frame size	Motor	T_{Bk}/T_{rated}	T_A/T_{rated}	L_{pfA}	L_{WA}	Z_0	J_{mot}	m_{mot}	Article No. Data position 9th	10th	11th	12th	Order code No. of poles	Specification NEMA	UL-R/CSA
		-	-	dB (A)	dB (A)	1/h	10^{-4} kgm²	kg							
4-pole, 1 800 rpm at 60 Hz, 50 Hz power															
80	LE80ZMQ4P	4.70	O.R.	55	66	O.R.	29	10.00	**D**	**F**	**2**	**3**	**-**	**N38**	**N35**
2-pole, 3 600 rpm at 60 Hz, 50 Hz power															
80	LE80ME2P	3.60	O.R.	64	75	O.R.	11	9.30	**D**	**B**	**2**	**3**	**P00**	**N38**	**N35**
	LE80ZMJ2P	4.50	O.R.	64	75	O.R.	13	10.00	**D**	**M**	**2**	**3**	**P00**	**N38**	**N35**
		⬇ (1)	⬇ (2)	(3)	(4)	⬇ (5)	⬇ (6)	⬇ (7)	⬇ (8)	⬇ (8)	⬇ (9)	⬇ (10)	⬇ (11)	⬇ (12)	⬇ (13)	(14)	

(1) Motor frame size
(2) Motor designation
(3) Relative breakdown torque
(4) Relative average acceleration torque
(5) Measuring surface sound pressure level
(6) Sound power level
(7) No-load switching frequency
(8) Moment of inertia
(9) Weight (without end shield at DE)
(10) Article No. of the motor frame size
(11) Article No. of the motor type
(12) Article No. of the motor series
(13) Order code for pole number
(14) Order code for special specifications

© Siemens AG 2017

Overview

Shaft heights

DIN 747 shaft heights for machines

Shaft height	Tolerance
mm	mm
≤ 250	-0.5
> 250	-1

Note:

For foot-mounted gearboxes, the mounted motor can extend below the mounting surface of the gearbox.

Shaft extensions

DIN 748-1 cylindrical shaft extensions

Diameter tolerance:

Diameter	Tolerance
mm	mm
≤ 50	ISO k6
> 50	ISO m6

Centering holes according to DIN 332, form DR:

Diameter	Thread size
mm	-
> 16 … 21	M6
> 21 … 24	M8
> 24 … 30	M10
> 30 … 38	M12
> 38 … 50	M16
> 50 … 85	M20
> 85 … 130	M24
> 130	M30

Undercut acc. to DIN 509:

Diameter	Undercut acc. to DIN 509	Suggested construction, minimum hollow on mating piece
mm		mm
> 16 … 18	E1.0x0.2	0.9 x 45 °
> 18 … 50	E1.2x0.2	1.1 x 45 °
> 50 … 80	E1.6x0.3	1.4 x 45 °
> 80 … 125	E2.5x0.4	2.2 x 45 °

Hollow shafts

Hollow shaft with feather key

Diameter tolerance Ø: ISO H7 measured using a mandrel gauge

Feather key: acc. to DIN 6885-1 (high form)

Hollow shafts with shrink disk

Diameter tolerance Ø: ISO H7 with mandrel gauge, measured in the area of the shrink disk seat. Hub seat, output side equipped with journal bearing sleeve.

Minimum requirement for the design of the customer shaft:

- Elastic limit Re ≥ 360 N/mm²
- Module of elasticity, approx. 206 kN/mm²
- Without tapped hole on the face

Hollow shafts with splines

Splines according to DIN 5480

Hollow shafts for the SIMOLOC assembly system

The diameters of the taper bushing and the bronze bushing are designed to hold a customer shaft with tolerance h11.

Minimum requirement for the design of the customer shaft:

- Bright steel drawn EN 10278 (tolerance Ø: ISO h11)
- Elastic limit Re ≥ = 360N/mm²
- Module of elasticity, approx. 206 kN/mm²
- Straightness less than 0.5 mm/m

Note:

Deviation from the specified straightness will cause radial runout of the customers shaft. Customer shafts with minor radial runout ensure optimum operating conditions for geared motors.
This has a positive impact on the service life of the drive train.

Flanges

Centering edge tolerance:

Outer flange diameter	Tolerance
mm	mm
≤ 300	ISO j6
> 350	ISO h6

Vent valves

The gearboxes are shown in the dimensional drawings with screw plugs.
If venting is required, then depending on the type of construction, an activated vent valve is installed.
The contour dimension can slightly change as a result.

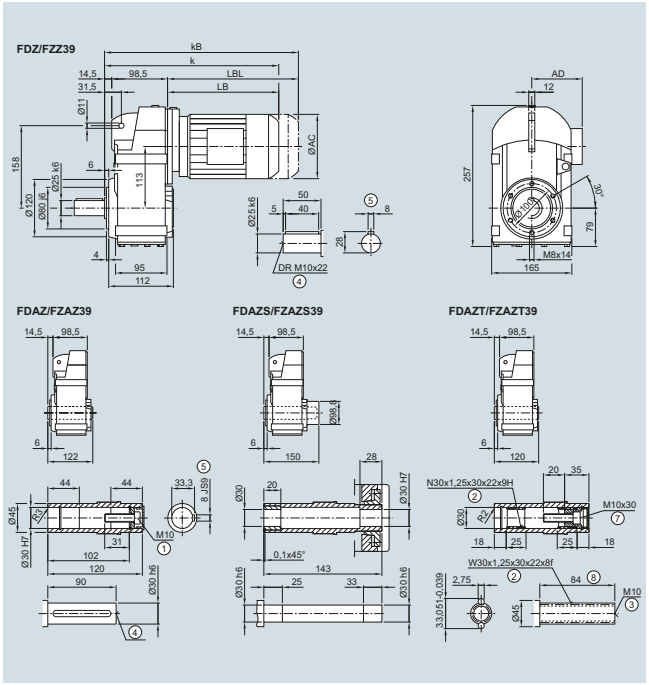

Fig. 1/16 Example, dimensional drawings

© Siemens AG 2017

Overview

The following certificates are available for SIMOGEAR geared motors. You can select these individually, or combine them freely into a multi-certificate.

Specifications

Country/economic area	Marking Examples	Legal/normative requirements
Europe/EU 		**Low Voltage Directive (LVD) 2006/95/EU**
		**Eco-design Directive 2009/125/EC** EU Regulation (EC) No. 640/2009 to implement the eco-design directive and amending regulation (EU) No. 4/2014
USA 	**MG1-12**	**NEMA MG1-12** National standard
		**UL 1004** Standard of the Underwriters Laboratories Inc. (testing and certification body)
	CC032 A	**EISA** Energy Independence Security Act
Canada 		**CSA-C22.2 No. 100** Standard of the Canadian Standards Association
		**EER** Energy Efficiency Regulations
China 		**CCC** China Compulsory Certification
		**CEL – China Energy Label** Based on the national standard GB 18613-2012 **ECL** Energy Conservation Law of PRC
Russian Federation  **Belarus**  **Kazakhstan** 		**EAC** Eurasian Conformity

© Siemens AG 2017

Motors for the North American market

Motors in frame sizes 63 to 250 are available in designs which meet the UL-R and CSA standards.

Order code:

Design in accordance with UL-R and CSA	**N38**

Note:

In the USA, a distinction is made between the rated voltage of the supply system and the rated voltage of the motor.
See the table below for the assignment:

Country	Rated voltage of the supply system	Rated voltage of the motor
USA	208 V	200 V
	240 V	230 V
	480 V	460 V
Canada	600 V	575 V

UL-R – Underwriters Laboratories Inc.

The motors are listed for up to 600 V by Underwriters Laboratories Inc. ("Recognition Mark" = R/C). Motor voltages up to 600 V are certified according to UL. "UL Recognition Mark" is included on the rating plate of the motor.

In addition, the motor is designed to meet the NEMA MG1-12 electrical standard and includes the following data on the rating plate:

- Rated voltage(s)
- Nominal efficiency
- Design letter
- Code letter
- CONT
- NEMA MG1-12

Externally or internally mounted components such as:

- Motor protection
- Heating element
- Forced ventilation
- Brake
- Encoder
- Plug connection

are UL-R/C, CSA, or C-US listed or used by manufacturers in accordance with regulations. UL-R/C cable glands must be used for the cable entry.

CSA – Canadian Standard Association

The motors are approved for up to 690 V in accordance with the "Canadian Standard Association" (CSA). Externally or internally mounted components which are used are listed by CSA or are used by manufacturers in accordance with regulations. The CSA mark and the rated voltage are stamped on the rating plate.

When energy-saving motors are ordered, they also have the "CSA-E mark" on the rating plate.

Motors for the Chinese market

CCC-certified motors, frame sizes 63 to 90, are available for export to China.

The "China Energy Label" required for import into China is available for motors in frame sizes from 80 to 250.

The motors are marked according to the requirements with CCC, CEL or both specifications.

Order code:

Design for the Chinese market	**N67**

CCC – China Compulsory Certification

"Small power motors" which are exported to China must be certified up to a rated power of:

2-pole: ≤ 2.2 kW

4-pole: ≤ 1.1 kW

6-pole: ≤ 0.75 kW

8-pole: ≤ 0.55 kW

Motors requiring certification are certified by CQC (China Quality Certification Center).
When ordered, the "CCC (Safety Mark)" logo is stamped on the rating plate and packaging.

Note:

Chinese customs checks the need for certification of imported products using the commodity code.

The following do not need to be certified:

- Motors imported to China which have already been installed in a machine
- Repair parts

CEL – China Energy Label

China introduced mandatory energy efficiency labeling for electric motors in June 2008.

From September 1, 2008, and until the transition phase expires, the affected electric motors may only be imported into China and sold in the country with a valid "China Energy Label".

The motor must be labeled with the "China Energy Label" sticker, which states the efficiency class.

In addition to the Energy Label (dimensions 80 x 54 mm) the efficiency is also stamped on the rating plate.

2-pole, 4-pole and 6-pole motors with a line frequency of 50 Hz and a rated voltage of up to 1000 V must be appropriately marked. Efficiency classes 2 and 3 apply here to motors with rated powers from 0.75 to 375 kW.

© Siemens AG 2017

Motors for the Eurasian market

SIMOGEAR geared motors are certified for the Eurasian economic area.

In the Russia, Kasachstan and Belarus customs union, new technical regulations and uniform conformity requirements (EAC) have been introduced. These replace the previous GOST-R certificates which thus lose their validity.

The certificate is mandatory for export and is required by the customs authorities.

The EAC certificate is valid for all geared motors. For gearboxes with adapters the EAC certificate is not necessary because the EAC certificate only refers to the motor.

Order code:

Version in accordance with EAC	**N30**

Without CE marking for export

For geared motors to be exported outside the European economic area, the order option "Without CE marking for export" is available. The CE marking is not displayed on the rating plate of these motors.

These geared motors may only be exported to countries outside the European economic area which do not require the CE marking.

Order code:

Without CE marking	**N68**

Explosion protection according to ATEX

SIMOGEAR gearboxes are available for operation in hazardous areas. The explosion-proof versions of the helical, parallel shaft, bevel, helical worm and worm gearboxes comply with Directive 2014/34/EU (ATEX) which came into force on April 20, 2016.

The gearboxes are approved for use in zones 1 and 2 (gases) and zones 21 and 22 (dust).

Ex atmosphere/Zone		**Category**	**Frequency**	**SIMOGEAR gearbox available**
G (gas and steam)	D (dust)			
0	20	1	constantly or long-term	no
1	21	2	infrequently	yes
2	22	3	rarely or briefly	yes

Use in explosive atmosphere G (gases) is permissible for temperature classes T1 to T4. With use in explosive atmosphere D (dust), it must be noted that the maximum permissible temperature for the gearbox is 120 °C.

© Siemens AG 2017

Efficiency classes and efficiencies according to IEC 60034-30-1

Harmonization of the efficiency classes

Various energy efficiency standards exist worldwide for induction motors. To promote international standardization, the international standard IEC 60034-30-1 03/2014 (Rotating electrical machines – Part 30: Efficiency classes of single-speed, three-phase, cage-induction motors (IE code)) was drawn up. This groups low-voltage asynchronous motors into new efficiency classes (first released in October 2008).

Applicability (excerpt)

- Low-voltage motors up to 1 000 V (50/60 Hz in line operation)
- Rating: 0.12 to 1 000 kW; with 2, 4, 6, or 8 poles
- Operating mode: S1

The efficiencies in IEC 60034-30-1 are based on the method for determining losses according to IEC 60034-2-1:2014.

IE efficiency classes

The efficiency classes are grouped according to the following nomenclature (IE = International Efficiency):

- IE1 (Standard Efficiency)
- IE2 (High Efficiency)
- IE3 (Premium Efficiency)
- IE4 (Super Premium Efficiency)

Comparison of IE efficiency classes

IEC 60034-30-1	NEMA-MG1	GB 18613-2012
IE4		Grade 1 (IE4)
IE3	Premium Efficient (60 Hz)	Grade 2 (IE3)
IE2	Energy Efficient (60 Hz)	Grade 3 (IE2)

Note:

All efficiency classes are stated with reference to 50 Hz data (unless specified otherwise).

Measuring method according to IEC 60034-2-1:2014 for determining the efficiency

With this measuring method, motor losses are no longer applied as a percentage, but are determined by standard methods. The nominal efficiencies are therefore reduced from EFF1 to IE2 and from EFF2 to IE1, even though there have been no technical or physical changes to the motors.

Previously: PLL = 0.5 % of P1 was added (IEC 60034-2)
Now: PLL = individual measurement (IEC 60034-1)

PLL = load-dependent supplementary losses

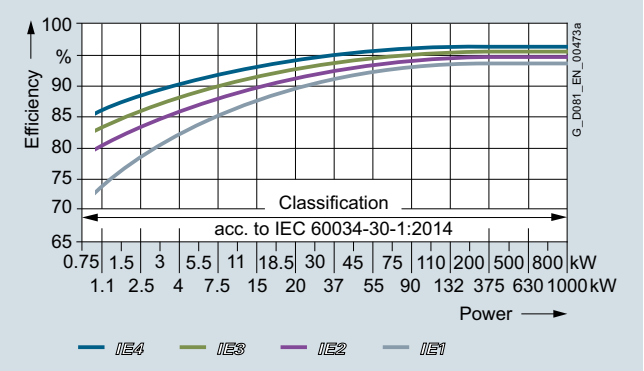

Fig. 1/17 IE1-IE3 efficiencies 4-pole at 50 Hz

Minimum efficiencies according to IEC 60034-30-1:2014

Rated power P_{rated}	Efficiency η in % IEC IE class							
	IE1-Standard Efficiency				**IE2**-High Efficiency			
kW	2-pole	4-pole	6-pole	8-pole	2-pole	4-pole	6-pole	8-pole
0.18	52.8	57.0	45.5	38.0	60.4	64.7	56.6	45.9
0.20	54.6	58.5	47.6	39.7	61.9	65.9	58.2	47.4
0.25	58.2	61.5	52.1	43.4	64.8	68.5	61.6	50.6
0.37	63.9	66.0	59.7	49.7	69.5	72.7	67.6	56.1
0.40	64.9	66.8	61.1	50.9	70.4	73.5	68.8	57.2
0.55	69.0	70.0	65.8	56.1	74.1	77.1	73.1	61.7
0.75	72.1	72.1	70.0	61.2	77.4	79.6	75.9	66.2
1.1	75.0	75.0	72.9	66.5	79.6	81.4	78.1	70.8
1.5	77.2	77.2	75.2	70.2	81.3	82.8	79.8	74.1
2.2	79.7	79.7	77.7	74.2	83.2	84.3	81.8	77.6
3.0	81.5	81.5	79.7	77.0	84.6	85.5	83.3	80.0
4.0	83.1	83.1	81.4	79.2	85.8	86.6	84.6	81.9
5.5	84.7	84.7	83.1	81.4	87.0	87.7	86.0	83.8
7.5	86.0	86.0	84.7	83.1	88.1	88.7	87.2	85.3
11	87.6	87.6	86.4	85.0	89.4	89.8	88.7	86.9
15	88.7	88.7	87.7	86.2	90.3	90.6	89.7	88.0
18.5	89.3	89.3	88.6	86.9	90.9	91.2	90.4	88.6
22	89.9	89.9	89.2	87.4	91.3	91.6	90.9	89.1
30	90.7	90.7	90.2	88.3	92.0	92.3	91.7	89.8
37	91.2	91.2	90.8	88.8	92.5	92.7	92.2	90.3
45	91.7	91.7	91.4	89.2	92.9	93.1	92.7	90.7
55	92.1	92.1	91.9	89.7	93.2	93.5	93.1	91.0
75	92.7	92.7	92.6	90.3	93.8	94.0	93.7	91.6
90	93.0	93.0	92.9	90.7	94.1	94.2	94.0	91.9
110	93.3	93.3	93.3	91.1	94.3	94.5	94.3	92.3
132	93.5	93.5	93.5	91.5	94.6	94.7	94.6	92.6
160	93.8	93.8	93.8	91.9	94.8	94.9	94.8	93.0
200 ... 375	94.0	94.0	94.0	92.5	95.0	95.1	95.0	93.5

Rated power P_{rated}	Efficiency η in % IEC IE class							
	IE3-Premium Efficiency				**IE4**-Super Premium Efficiency			
kW	2-pole	4-pole	6-pole	8-pole	2-pole	4-pole	6-pole	8-pole
0.18	65.9	69.9	63.9	58.7	70.8	74.7	70.1	67.2
0.20	67.2	71.1	65.4	60.6	71.9	75.8	71.4	68.4
0.25	69.7	73.5	68.6	64.1	74.3	77.9	74.1	70.8
0.37	73.8	77.3	73.5	69.3	78.1	81.1	78.0	74.3
0.40	74.6	78.0	74.4	70.1	78.9	81.7	78.7	74.9
0.55	77.8	80.8	77.2	73.0	81.5	83.9	80.9	77.0
0.75	80.7	82.5	78.9	75.0	83.5	85.7	82.7	78.4
1.1	82.7	84.1	81.0	77.7	85.2	87.2	84.5	80.8
1.5	84.2	85.3	82.5	79.7	86.5	88.2	85.9	82.6
2.2	85.9	86.7	84.3	81.9	88.0	89.5	87.4	84.5
3.0	87.1	87.7	85.6	83.5	89.1	90.4	88.6	85.9
4.0	88.1	88.6	86.8	84.8	90.0	91.1	89.5	87.1
5.5	89.2	89.6	88.0	86.2	90.9	91.9	90.5	88.3
7.5	90.1	90.4	89.1	87.3	91.7	92.6	91.3	89.3
11	91.2	91.4	90.3	88.6	92.6	93.3	92.3	90.4
15	91.9	92.1	91.2	89.6	93.3	93.9	92.9	91.2
18.5	92.4	92.6	91.7	90.1	93.7	94.2	93.4	91.7
22	92.7	93.0	92.2	90.6	94.0	94.5	93.7	92.1
30	93.3	93.6	92.9	91.3	94.5	94.9	94.2	92.7
37	93.7	93.9	93.3	91.8	94.8	95.2	94.5	93.1
45	94.0	94.2	93.7	92.2	95.0	95.4	94.8	93.4
55	94.3	94.6	94.1	92.5	95.3	95.7	95.1	93.7
75	94.7	95.0	94.6	93.1	95.6	96.0	95.4	94.2
90	95.0	95.2	94.9	93.4	95.8	96.1	95.6	94.4
110	95.2	95.4	95.1	93.7	96.0	96.3	95.8	94.7
132	95.4	95.6	95.4	94.0	96.2	96.4	96.0	94.9
160	95.6	95.8	95.6	94.3	96.3	96.6	96.2	95.1
200 ... 375	95.8	96.0	95.8	94.6	96.5	96.7	96.3	95.4

© Siemens AG 2017

Efficiency classes and efficiencies according to IEC 60034-30-1 (continued)

Background information

Comprehensive laws have been introduced in the European Union with the objective of reducing energy consumption and therefore CO2 emissions. EU Directive 640/2009 concerns the energy consumption or efficiency of induction motors in the industrial environment. This Directive is now in force in every country of the European economic area.

For further details on internationally applicable standards and legal requirements, visit:
www.siemens.com/international-efficiency

Exceptions to the EU Directive

- Motors that are designed to be operated totally submerged in a liquid;
- Motors fully integrated into a product (e.g. a gearbox, pump, fan or compressor) whose energy efficiency cannot be measured independently of the product;
- Motors that are specially designed for operation under the following conditions:
  - At altitudes greater than 4000 meters above sea level;
  - At ambient temperatures above 60 °C;
  - At maximum operating temperatures above 400 °C;
  - At ambient temperatures below -30 °C (any motor)
  - With cooling liquid temperatures at the product intake of below 5 °C or above 25 °C;
  - In hazardous areas in the context of Directive 94/9/EU of the European Parliament and Council;
- Brake motors

The following motors are not involved:

- 8-pole motors
- Pole-changing motors
- Synchronous motors
- Motors for intermittent duty S2 to S9
- Single-phase motors
- Motors specially developed for inverter operation in accordance with IEC 60034-25

The following changes came/will come into effect on the dates below:

Since July 27, 2014, the following exceptions have been valid in accordance with EU Regulation 04/2014:

- At altitudes exceeding 4000 m (above sea level)
- Where ambient temperatures exceed 60 °C
- At ambient temperatures of less than -30 °C, or less than 0 °C with water cooling
- Where coolant temperatures at the inlet to a product are less than 0 °C or exceed 32 °C

From January 1, 2015:

Compliance with the legally required minimum efficiency class IE3 for power ratings from 7.5 to 375 kW or, as an alternative, IE2 motor plus frequency inverter

Changes in accordance with EU Motor Regulation 640/2009

Low-voltage motors with a power rating of between 7.5 and 375 kW and efficiency IE2 must be labeled as follows with effect from January 1, 2015:

This obligation applies only within the European Economic Area. Correct application is the sole responsibility of the customer.

From January 1, 2017:

Compliance with the legally required minimum efficiency class IE3 for power ratings from 0.75 to 375 kW or, as an alternative, IE2 motor plus frequency inverter

Note:

Different minimum efficiency class requirements apply in China, Korea and Australia. Other countries will be available soon.

Motors for the North American market

The Energy Policy Act (EPAct) was superseded in December 2010 by the Energy Independence Security Act (EISA).

The following motors must fulfill the NEMA Premium Efficient Level:

- 1 to 200 hp
- 2, 4 and 6-pole
- 230 V, 460 V, motors with feet

For details, see NEMA MG1, Table 12-12.

Abbreviations

NEMA: National Electrical Manufacturers Association
IEC: International Electrotechnical Commission

© Siemens AG 2017

Geared motor noise

SIMOGEAR geared motors have noise levels below the permissible noise levels defined for gearboxes in VDI Guideline 2159 and for motors in IEC 60034-9.

When used in conjunction with gearboxes, the motor noise values L_{pfA} or L_{WA} increase on average by 3 to 5 dB (A).

The circumferential velocity of the motor pinion has a significant influence on the additional gearbox noise level. This is the reason that higher speeds or low transmission ratios result in higher noise.

Here, SIMOGEAR geared motors provide a decisive advantage, as the motor plug-on pinion allows transmission ratios of up to 12 in the input stage.

Code	Description	Unit
L_{pfA}	A-weighted measuring-surface sound-pressure level	dB (A)
L_{WA}	Sound power level	dB (A)

Motor noise in line operation

The noise level is measured according to ISO 1680 in a low-reflection room and is specified as an A-weighted measuring surface sound pressure level L_{pfA} in dB (A). This value is the spatial average value of the sound pressure levels measured at the measuring surface. The measuring surface is a cube 1 m away from the surface of the motor. The sound power level L_{WA} is also specified in dB (A).

The values specified in the motor selection tables apply to the motor without gearbox at 50 Hz
Selection and ordering data, page 8/14.

The tolerance is +3 dB. At 60 Hz, the values are approximately 4 dB (A) higher. Noise values for inverter operation on request.

Direction of rotation

Overview

All geared motors are connected as standard so that the motor rotates in the clockwise direction.

It is necessary to specify the desired direction of rotation of the output shaft when ordering a geared motor with backstop.

Direction of rotation	**Clockwise**	**Counterclockwise**
Abbreviation	CW (clockwise)	CCW (counterclockwise)
Description	Clockwise direction of rotation (when viewing the input/output shaft)	Counterclockwise direction of rotation (when viewing the input/output shaft)
Order code	**K18**	**K19**

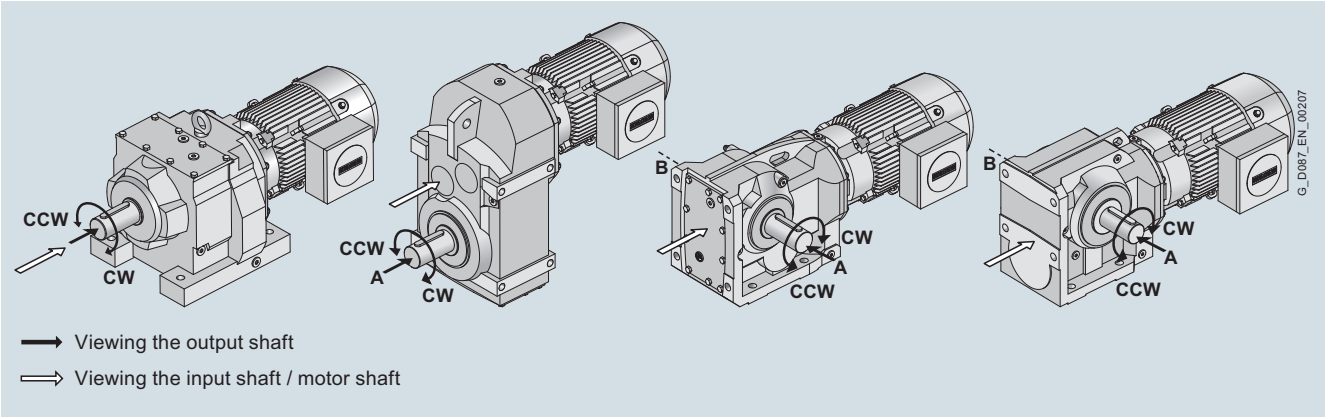

Fig. 1/18 Definition of the direction of rotation

Direction of rotation, input to output

Gearbox type	**Frame size**	**Gearbox stages**	**Output side**	**Direction of rotation**	
				Input shaft	**Output shaft**
Z	19 … 189	2	-	CW	CW
D	19 … 189	3	-	CW	CCW
FZ	29 … 189	2	-	CW	CW
FD	29 … 189	3	-	CW	CCW
B	19 … 49	2	A	CW	CW
			B	CW	CCW
K	39 … 189	3	A	CW	CCW
			B	CW	CCW
C	29 … 89	2	A	CW	CW
			B	CW	CCW
S	09 … 29	1	A	CW	CCW
			B	CW	CW

Note:

For bevel gearboxes B and K, helical worm gearboxes C and worm gearboxes S, the direction of rotation must be specified when viewing the DE or NDE.

© Siemens AG 2017

Notes

© Siemens AG 2017

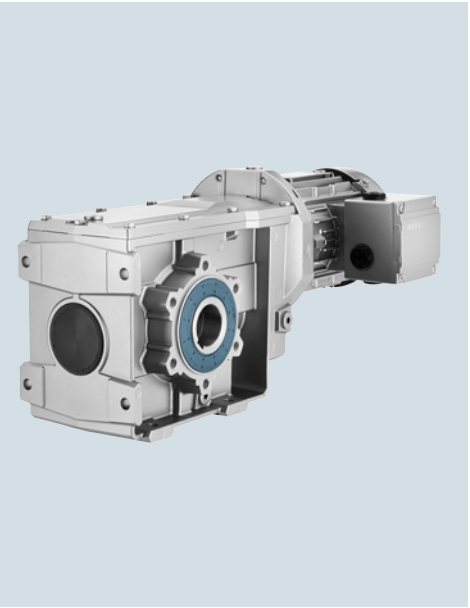

2/2 Determining the drive data
2/2 Configuring sequence
2/3 Checklist

2/4 Configuring a gearbox
2/4 Standards
2/4 Gearbox efficiency
2/4 • Helical, parallel shaft and bevel gearboxes
2/4 • Helical worm and worm gearboxes
2/4 • Self-locking with worm gearboxes
2/4 • Efficiency optimization
2/4 • Splashing losses
2/5 Service factor
2/5 • Determining the required service factor
2/5 • Determining the load classification
2/5 • Mass acceleration factor
2/6 • Service factors for helical worm gearboxes and worm gearboxes
2/6 Required torque
2/6 Input speed
2/7 Tandem gearboxes
2/7 • Checking the maximum motor power
2/7 • Protective measures
2/7 • Brake motors
2/7 • Preventing gearbox blockage
2/8 Gearbox fastening
2/9 Shaft load and bearing service life
2/9 • Available radial force
2/9 • Additional factor C for the transmission element type
2/9 • Permissible radial force
2/9 • Permissible axial force
2/9 • Higher permissible radial and axial forces
2/9 • Definition of the point of application of the radial and axial forces
2/10 • Radial force conversion for out of center force application point
2/11 Permissible torque for SIMOLOC assembly system

2/12 Configuring a three-phase motor
2/12 Determining the duty type
2/15 Number of starting operations
2/16 Additional moments of inertia
2/16 Line feeder cables
2/16 • Undervoltage
2/16 Motor protection
2/16 • Current-dependent protective devices
2/16 • Temperature-dependent protective devices
2/16 Coolant temperature and installation altitude
2/17 Degrees of protection
2/17 Cooling and ventilation
2/17 • Forced ventilation

2/18 Configuring a brake
2/18 Overview
2/18 Determining the braking torque
2/18 Braking torques as a function of speed and permissible speed limits
2/18 Braking energy per braking operation
2/18 Service life of the brake lining
2/18 Brake service life
2/19 Brake control
2/19 • Definition of switching times (VDI 2241)
2/19 • Fast brake application
2/19 • Fast brake release
2/20 Brake switching time
2/20 Braking distance and positioning accuracy
2/20 Cyclic duration factor

2/21 Configuring an encoder
2/21 Incremental encoders
2/22 Resolvers
2/22 Absolute encoders
2/23 Functionally safe rotary encoders

2/25 Configuring the motor for inverter operation
2/25 Operation of geared motors on a frequency inverter
2/25 Motor characteristic
2/25 Utilization in accordance with temperature class F
2/26 Peak load / acceleration torque
2/26 Permissible voltage stress
2/26 Bearing currents
2/26 Mechanical load, grease service life

© Siemens AG 2017

Configuring sequence

Overview

General configuring notes are provided for the standard versions in this catalog.

SIMOGEAR geared motors permit individual solutions to be created for a wide range of drive applications. In order to select the correct drive, initially specific data for the application must be known or determined.

For drives operating under special conditions, e.g. frequent reversing, short-time or intermittent duty, abnormal temperatures, reversal braking, extreme cantilever forces at the gearbox output shaft, etc. please contact your Siemens contact person with all of your technical questions.

You will find additional information on our website at www.siemens.com/gearedmotors

The flow diagram illustrates the process for selecting and dimensioning a geared motor using a traction drive as an example. However, the specific requirements and boundary conditions associated with the application in question must always be taken into account.

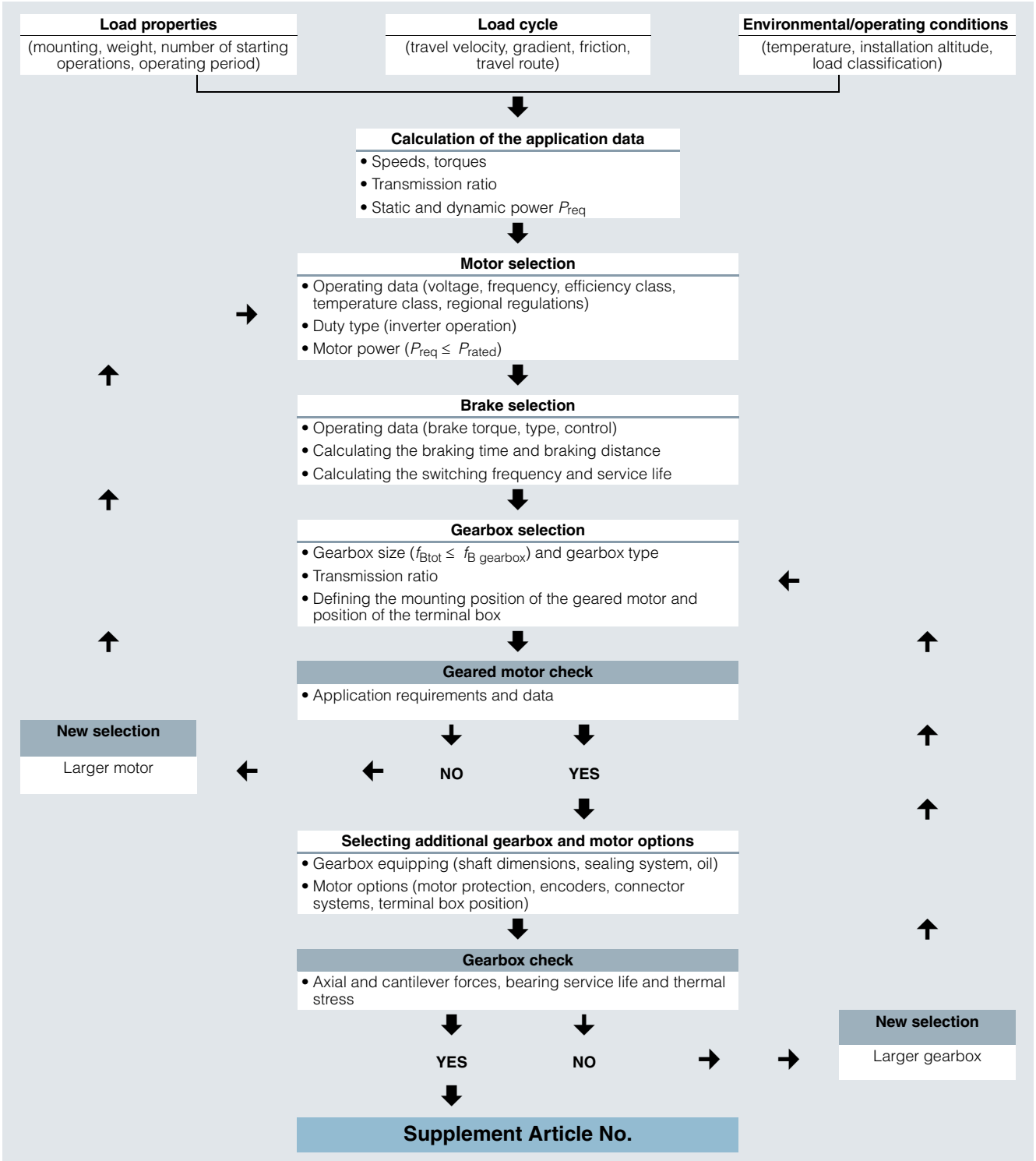

© Siemens AG 2017

General

Basic version and load data

Gearbox type: ☐ Helical gearbox ☐ Parallel shaft gearbox ☐ Bevel gearbox ☐ Helical worm gearbox ☐ Worm gearbox

Power rating: _____ kW

Output speed: _____ rpm **Output torque:** _____ Nm

Service factor: _____

Starting operations/hour: _____ s/h

Line voltage: _____ V

Line frequency: ☐ 50 Hz ☐ 60 Hz ☐ For inverter operation ☐ Maximum frequency _____ Hz

Operating period/day: ☐ 8 hours ☐ 16 hours ☐ 24 hours

Environmental conditions

Installation altitude: _____ m ☐ Outdoor operation ☐ Increased environmental stress

Air humidity: _____ % ☐ Normal environmental stress ☐ Aggressive environmental stress

Temperature: from _____ to _____ °C

Brief description of the system: (e.g. sector, conveyor system, etc.)

Gearbox

Mounting and mounting position

Mounting position: ☐ M1 ☐ M2 ☐ M3 ☐ M4 ☐ M5 ☐ M6 **Terminal box position:** _____

Mounting type: ☐ Foot-mounted design ☐ Flange-mounted design ☐ Housing flange design ☐ Shaft-mounted design

Shafts

Design: ☐ Solid shaft with/without feather key ☐ Hollow shaft with feather key ☐ Hollow shaft with shrink disk ☐ Hollow shaft with splines ☐ SIMOLOC assembly system

Shaft dimensions: (d x l) _____ x _____ mm

Other options: (e.g. axial/radial force)

Motor

Electrical design

Motor protection: ☐ PTC thermistor ☐ Winding thermostat ☐ Temperature sensor KTY 84-130 ☐ 1x resistance thermometer PT100

Mechanical design

Degree of protection: ☐ IP55 ☐ IP65 ☐ IP56

Cooling & ventilation: ☐ Self ventilation ☐ Forced ventilation

Motor plugs: ☐ HAN 10E ☐ HAN K4/4 ☐ Others _____
☐ HAN Q8 ☐ HAN Q12

Mounted components

Brake: ☐ Brake ☐ Manual release Voltage: _____ V

Encoder: ☐ Incremental encoder ☐ Absolute encoder ☐ Resolver ☐ Prepared for encoder mounting
☐ Functionally safe rotary encoder

Other options:

SINAMICS G110M

Power Module: Power rating: _____ kW Motor connection: _____

Control Unit: Type of connection: _____ Communication: _____

Supported options: ☐ Internal braking resistor Accessories: ☐ IOP Handheld ☐ SD card
☐ Externally mounted components _____ ☐ PC connecting cable

General options

Surface treatment

Surface protection: ☐ C1 ☐ C2 ☐ C3 ☐ C4 ☐ C5
☐ unpainted ☐ C3 primed ☐ C4 primed ☐ RAL color: _____

Other options:

© Siemens AG 2017

Standards

DIN/ISO	
DIN 743	Output shafts
ISO 281, ISO 76	Bearings
DIN 7190	Interference fits
DIN 6892	Parallel key connection
DIN 3990	Cylindrical gear toothing
DIN 3991	Bevel gear toothing
DIN 3996	Worm gear toothing

Calculation to AGMA available on request.

Gearbox efficiency

The efficiency of the gearbox is determined in part by the gear teeth, the rolling-contact bearing friction, and the shaft seal friction.

Helical, parallel shaft and bevel gearboxes

SIMOGEAR helical, parallel shaft, and bevel geared motors have a very high efficiency. Generally, efficiencies of 96 % (2-stage) and 94 % (3-stage) can be assumed. These gearbox types can be operated with energy-efficient motors to create an excellent solution.

Helical worm and worm gearboxes

The first stage of the helical worm gearbox is designed as a helical stage. With the optimally tuned transmission ratios of the worm stage, the best possible overall efficiency is achieved, which is considerably higher than that of worm gearboxes alone.

Precise efficiency data can be found in the tables in chapter "Helical worm gearboxes".

Owing to the high degrees of efficiency, the SIMOGEAR helical worm gearboxes are not self-locking.

Running-in period

The tooth flanks on new helical worm and worm gearboxes will not yet be fully smoothed, meaning that the friction angle will be greater and efficiency lower during the running-in period. The higher the transmission ratio, the more pronounced the effect.

The running-in process should take approximately 24 hours of operation at full load. In most cases, the catalog values will then be reached.

Self-locking with worm gearboxes

In respect of restoring torques on worm gearboxes, the efficiency is considerably reduced in comparison to standard efficiency. The restoring efficiency can be calculated as follows: $\eta' = 2 - 1/\eta$. With a normal efficiency of $\eta \leq 0.5$, worm gearboxes are usually self-locking, a characteristic which is determined by the particular lead angle of the worm gear teeth.
Only certain combinations of SIMOGEAR gearboxes are capable of self-locking. This feature is not always an advantage because it is associated with relatively high efficiency losses and thus the need for a higher motor power.

A worm gearbox is "self-locking while stationary" (static self-locking), if it is not possible to start from stationary when the worm wheel is driving.
A worm gearbox is "self-braking while running" (dynamic self-locking), if it is not possible to continue running when the worm wheel is driving while the gearbox is running – that is, if the running gearbox comes to a stop while the worm wheel is driving.

Shocks can neutralize self-locking.
A self-locking gearbox is therefore no substitute for a brake or backstop. If you want to use the self-locking braking effect for a technical purpose, please contact us.

Efficiency optimization

As result of the large range of transmission ratios, in many cases, instead of a 3-stage gearbox, a 2-stage SIMOGEAR gearbox can be used.

This means that the efficiency is improved by approximately 2 % when compared to conventional drives.

Further, the efficiency can be improved by optimizing the mounting position and the input speed.

Splashing losses

For certain gearbox types of construction, the first stage can be completely immersed in the gearbox oil. In the case of large gearboxes with a high input speed, particularly with vertical mounting positions, this may lead to increased splashing losses, which cannot be neglected.

If you wish to use gearboxes such as these, then please contact Siemens. If at all possible, you should choose horizontal types of construction in order to keep splashing losses to a minimum.

© Siemens AG 2017

Service factor

Determining the required service factor

The operating conditions are crucial in determining the service factor and for selecting the geared motor. These are taken into account by the service factor f_{Btot}.

In standard operation, i.e. with a uniform load provided by the driven machine, small masses to be accelerated, and a low number of starting operations, the service factor of $f_{Btot} = 1$ can be selected.

For different operating conditions, the service sector can be taken from the tables. When the motor power and the gearbox output speed are known, a gearbox type is selected with a service factor that meets the following condition:

$f_{Btot} = f_{B1} \leq f_B$

The gearbox size or rated gearbox torque and the resulting service factor are not standardized and depend on the manufacturer.

Determining the load classification

The service factor of the driven machine f_{Btot} is determined from the load classification, number of starting operations, and operating period per day.

The operating conditions can vary greatly. To determine the service factor, empirical values can be derived from the configuration of other similar applications. The driven machines can be assigned to three load groups according to their load classification. These groups are assessed based on their mass acceleration factor m_{AF}.

Load groups of driven machines

Load classification	**Mass acceleration factor**	**Driven machine** (examples)
I Almost shock-free	≤ 0.3	Electric generators, belt conveyors, apron conveyors, screw conveyors, lightweight elevators, electric hoists, machine tool feed drives, turbo blowers, centrifugal compressors, mixers and agitators when mixing materials with uniform density
II Moderate shock loads	≤ 3	Machine tool main drives, heavy elevators, slewing gear, cranes, shaft ventilators, mixers and agitators when mixing materials with non-uniform densities, reciprocating pumps with multiple cylinders, metering pumps
III Heavy shock loads	≤ 10	Punching presses, shears, rubber kneaders, machinery used in rolling mills and the iron and steel industry, mechanical shovels, heavy centrifuges, heavyweight metering pumps, rotary drilling rigs, briquetting presses, pug mills

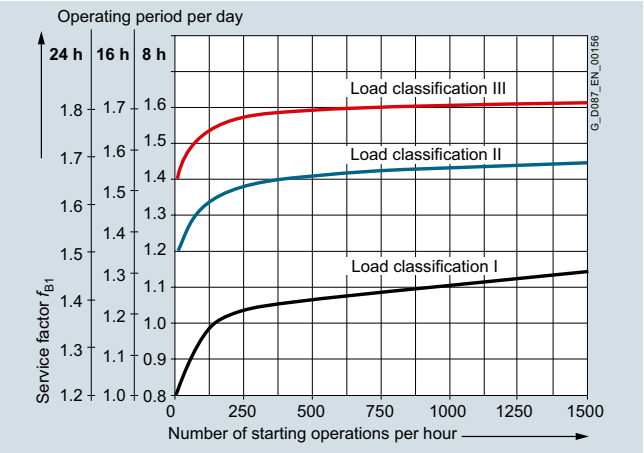

Fig. 2/1 Service factor f_{B1}

Note:

When selecting and dimensioning drives with the following special application conditions, please contact Siemens.

- Frequent reversing
- Short time and intermittent operation
- Abnormal temperatures
- Reversal braking
- Extreme and/or circulating radial forces at the gearbox output shaft
- Fluctuating loads

Mass acceleration factor

The mass acceleration factor m_{AF} is calculated as follows:

$$m_{AF} = \frac{J_x}{(J_{mot} + J_B + J_Z)}$$

All external moments of inertia are moments of inertia of the driven machine and the gearbox, which are to be reduced to the motor speed.

The calculation is made using the following formula:

$$J_X = J_2 \cdot \left(\frac{n_2}{n_1}\right)^2 = \frac{J_2}{(i)^2}$$

In most cases the relatively insignificant moment of inertia of the gearbox can be ignored.
The mass acceleration factor m_{AF} is calculated as follows with reference to the gearbox and the adapter:

$$m_{AF} = \frac{J_x + J_G + J_{AD}}{(J_{mot} + J_B + J_Z)}$$

Code	Description	Unit
i	Transmission ratio	-
J_2	Moment of inertia of the load referred to the output speed of the gearbox	kgm²
J_{AD}	Moment of inertia of the adapter referred to the input speed	kgm²
J_B	Moment of inertia of the brake	kgm²
J_G	Moment of inertia of the gear unit based on the input speed	kgm²
J_{mot}	Moment of inertia of the motor	kgm²
J_X	Moment of inertia of the load referred to the input speed	kgm²
J_Z	Additional moment of inertia of a high inertia fan	kgm²
m_{AF}	Mass acceleration factor	-
n_1	Input speed of the gearbox	rpm
n_2	Output speed of the gearbox	rpm

© Siemens AG 2017

Service factor (continued)

Service factors for helical worm gearboxes and worm gearboxes

With helical worm gearboxes and worm gearboxes, two additional service factors are used which take the duty cycle and ambient temperature into account. These additional factors can be determined from the graphs opposite. The total service factor is thus calculated as follows:

$$f_{Btot} = f_{B1} \cdot f_{B2} \cdot f_{B3}$$

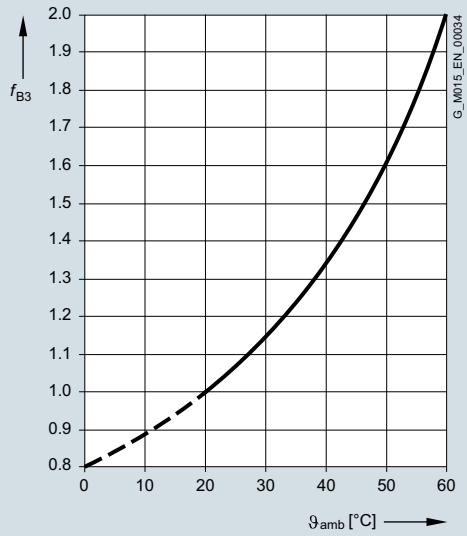

Fig. 2/2 Service factor ambient temperature

Example calculation for helical worm gearbox

Mass acceleration factor 2.5 (load classification II), runtime 15 hours per day (read at 16 hours) and 70 starts per hour result in a service factor of f_{B1} = 1.4 according to the service factor table.

A load duration of 30 minutes per hour gives a duty cycle (*DC*) of 50 %. Thus, the service factor is f_{B2} = 0.94 according to the service factor diagram.

At an ambient temperature of ϑ_{amb} = 20 °C, the service factor diagram gives a service factor of f_{B3} = 1.0.

The service factor required is therefore

$f_{Btot} = 1.4 \cdot 0.94 \cdot 1.0 = 1.32$

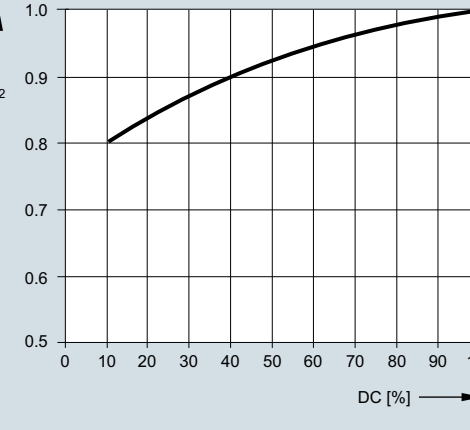

Fig. 2/3 Service factor "short-time duty"

Required torque

Once the load situation (drive data) and the service fact have been clarified, then the required output torque can be determined.

$$T_2 = \frac{P_{mot} \cdot 9550}{(n_1 / i) \cdot \eta} = \frac{P_{mot} \cdot 9550}{n_2} \cdot \eta$$

Code	Description	Unit
η	Gearbox efficiency	%
i	Transmission ratio	-
n_1	Input speed of the gearbox	rpm
n_2	Output speed of the gearbox	rpm
P_{mot}	Motor power	kW
T_2	Required input torque of the driven machine	Nm

Input speed

For an identical power and output speed, in the selection tables 4-pole geared motors have priority over 6-pole motors.

As result of the very wide range of transmission ratios of SIMOGEAR gearboxes, it is hardly necessary to use motors with other pole numbers. In addition to the good availability worldwide, 4-pole motors generally offer the optimum solution regarding price, length, noise level and service life.

Further, from the modular system, motors with other pole numbers can be mounted. As a consequence, the following special combinations can be implemented:

- Extremely high output speeds (2-pole motors)
- Extremely low output speeds (8-pole motors)
- Lower noise solutions (6-pole or 8-pole motors)

For inverter operation, the gearboxes are driven at variable speeds.
When configuring the system, we recommend that the maximum input speed in continuous operation is maintained, wherever possible, at 1 500 rpm.

At higher motor speeds above 1 500 rpm you will generally experience higher than average noise levels and a lower than average bearing service life. This depends to a large extent on the transmission ratio and gearbox size in question. Furthermore, higher speeds additionally influence the thermal properties of the gearbox and service intervals.

© Siemens AG 2017

Tandem gearboxes

An additional helical gearbox is mounted in front of the main gearbox on tandem gearboxes, allowing the gear to generate very low output speeds.

The SIMOGEAR product portfolio includes four-stage, five-stage and six-stage gearboxes.

When a gearbox version with low output speeds is selected, additional checks may need to be carried out when the gearbox is configured.

Checking the maximum motor power

The maximum motor power P_{rated} connected to the gearbox must be reduced according to the maximum output torque at the gearbox T_{2N}. For this purpose, the maximum permissible motor torque T_{1max} must be calculated and the relevant motor current value then determined.

Protective measures

The following precautions must be taken in order to ensure that the continuous power consumption of the motor never exceeds the calculated maximum motor torque T_{1max}:

- Line operation:
  Set the tripping current of the motor circuit breaker to this current value.
- Inverter operation:
  Limit the output current of the inverter according to the calculated motor current.

Brake motors

The braking torque T_{br} must be limited according to the maximum permissible motor torque T_{1max} for tandem geared motors with a brake. In this case, the maximum permissible braking torque corresponds to twice the value of the motor torque. Please contact Siemens for advice about higher switching frequencies.

$T_{brmax} = 2 \times T_{1max}$

Preventing gearbox blockage

Tandem gearboxes must be protected against blockage at the output end. Blockage can result in indeterminable torques and shaft loads and cause irreparable damage to the gearbox. If the risk of blockage cannot be eliminated, you can install friction clutches, for example.

Code	Description	Unit
P_{rated}	Rated motor power	kW
T_{1max}	Maximum permissible motor torque	Nm
T_{2N}	Maximum output torque of the gearbox	Nm
T_{brmax}	Maximum braking torque	Nm

© Siemens AG 2017

Gearbox fastening

Gearboxes and geared motors are normally secured by bolts of grade 8.8.

When the largest possible motor frame size is attached to the gearbox and with a higher load classification, elevated levels of vibration and/or smaller service factors, further measures need to be taken for flange-mounted designs of gearboxes and geared motors.

Recommended bolt quality for DZ/ZZ and DF/ZF:

Helical gearboxes DZ/ZZ and DF/ZF with the smallest available output flanges must be bolted to the mounting surface with bolts of grade 10.9 (see table).

Gearbox type		Flange	Strength class of bolt/nut
DZ/ZZ29	DF/ZF29	A120	10.9 [1]
DZ/ZZ39	DF/ZF39	A120	10.9 [1]
DZ/ZZ49	DF/ZF49	A140	10.9
DZ/ZZ59	DF/ZF59	A160	10.9
DZ/ZZ69	DF/ZF69	A200	10.9
DZ/ZZ79	DF/ZF79	A250	10.9
DZ/ZZ89	DF/ZF89	A300	10.9
DZ/ZZ109	DF/ZF109	A350	10.9
DZ/ZZ129	DF/ZF129	A350	10.9
DZ/ZZ149	DF/ZF149	A450	10.9
DZ/ZZ169	DF/ZF169	A450	10.9
DZ/ZZ189	DF/ZF189	A550	10.9

[1] Use suitable washers underneath the bolt head

We recommend that you consider the following possibilities:

- Selection of a larger output flange
- Use of bolts of grade 10.9
- Use of an anaerobic adhesive to improve the friction lock between the gearbox and the mounting surface

Recommended bolt quality for FF/FAF and KF/KAF:

Parallel shaft gearboxes FF/FAF and bevel gearboxes KF/KAF in combination with larger motors must be bolted to the mounting surface with bolts of grade 10.9 (see table).

Gearbox type		Flange	Motor frame size											
			63	71	80	90	100	112	132	160	180	200	225	250
FF/FAF39	KF/KAF39	A160	8.8	8.8	8.8	10.9	10.9							
FF/FAF49	KF/KAF49	A200	8.8	8.8	8.8	8.8	10.9	10.9						
FF/FAF69	KF/KAF69	A250	8.8	8.8	8.8	8.8	8.8	8.8	10.9					
FF/FAF79	KF/KAF79	A250	8.8	8.8	8.8	8.8	8.8	8.8	10.9					
FF/FAF89	KF/KAF89	A300		8.8	8.8	8.8	8.8	10.9	10.9	10.9				
FF/FAF109	KF/KAF109	A350			8.8	8.8	8.8	8.8	8.8	10.9	10.9			
FF/FAF129	KF/KAF129	A450				8.8	8.8	8.8	8.8	8.8	8.8	8.8		
FF/FAF149	KF/KAF149	A450				8.8	8.8	8.8	8.8	8.8	8.8	10.9	10.9	10.9
FF/FAF169	KF/KAF169	A550					8.8	8.8	8.8	8.8	10.9	10.9	10.9	10.9
FF/FAF189	KF/KAF189	A660						8.8	8.8	8.8	8.8	8.8	8.8	10.9

© Siemens AG 2017

Shaft load and bearing service life

Available radial force

The radial forces either come from the driven machine (mixer, hoisting gear) or they are caused by the transmission elements.

The available radial force F_{Ravail} at the output shaft is obtained as follows:

- The required geared motor output torque T_2
- Average diameter of the mounted transmission element d_0
- Transmission element type, e.g. sprocket wheel

The transmission element type determines the additional factor C (see table).

$$F_{Ravail} = 2000 \cdot \frac{T_2}{d_0} \cdot C$$

Additional factor C for the transmission element type

Transmission element	Explanation	Additional factor *C*
Gear wheel	> 17 teeth	1.00
	≤ 17 teeth	1.15
Sprocket wheel	≥ 20 teeth	1.00
	14 ... 19 teeth	1.25
	≤ 13 teeth	1.40
Toothed belts	Preloading force	1.50
V-belts	Preloading force	2.00
Flat belts	Preloading force	2.50
Agitator/mixer	Rotating radial force	2.50

Permissible radial force

The permissible radial force F_{R2} is determined by the required bearing service life, among other things. The nominal service life L_{h10} is determined in accordance with ISO 281. Normally, calculating the nominal bearing service life is completely adequate.

The bearing service life can be calculated for special operating conditions and in special cases on request, based on the modified service life L_{na}.

The selection tables specify the permissible radial force F_{R2} for the output shafts of foot-mounted gearboxes with solid shaft. These table values refer to the force application point at the center of the shaft extension and are minimum values, which apply under the most unfavorable conditions (force application angle, mounting position, direction of rotation).

If the values in the table are not sufficient, or if other gearbox designs are being used, please contact Siemens.

Permissible axial force

If no radial force is present, then max. 50 % of the permissible radial force can be applied as a permissible axial force F_{ax} (tension or compression).

Higher permissible radial and axial forces

The permissible radial force load can be increased, taking the force application angle α and the direction of rotation into account. Installing reinforced bearings also means that higher loads are permitted on the output shaft.

If higher radial or axial forces or combined loads comprising radial and axial forces occur, then please consult Siemens.

Note:
Bevel gearboxes B and K and helical worm gearboxes C in type of construction M1 for foot mounting on the face side:
A maximum of 50 % of the radial force F_{R2} specified in the tables is permissible.

Helical geared motors ZB and DB in a foot/flange-mounted design:
For torque transmission via the flange surface, a maximum of 50 % of the radial force F_{R2} specified in the tables is permissible.

Variables for defining shaft load and bearing service life

Code	Description	Unit
α	Force application angle	°
a	Gearbox constant	kNmm
b, d, l, y, z	Gearbox constants	mm
C	Additional factor to calculate the radial force	-
d_0	Average diameter of the mounted transmission element	mm
F_{ax}	Permissible axial force	N
F_x	Permissible radial force from out of center force application point	N
F_{xperm1}	Permissible radial force, limited by the bearing service life, at a distance of x from the shaft shoulder	N
F_{xperm2}	Permissible radial force, limited by the shaft strength, at a distance of x from the shaft shoulder	N
F_{Ravail}	Available radial force from the mounted transmission element	N
F_{R2}	Permissible radial force at the center of shaft extension (l/2)	N
L_{h10}	Nominal service life	h
L_{na}	Modified service life	h
T_2	Geared motor output torque	Nm
x	Distance from the shaft shoulder up to the point where force is applied	mm

Definition of the point of application of radial and axial forces

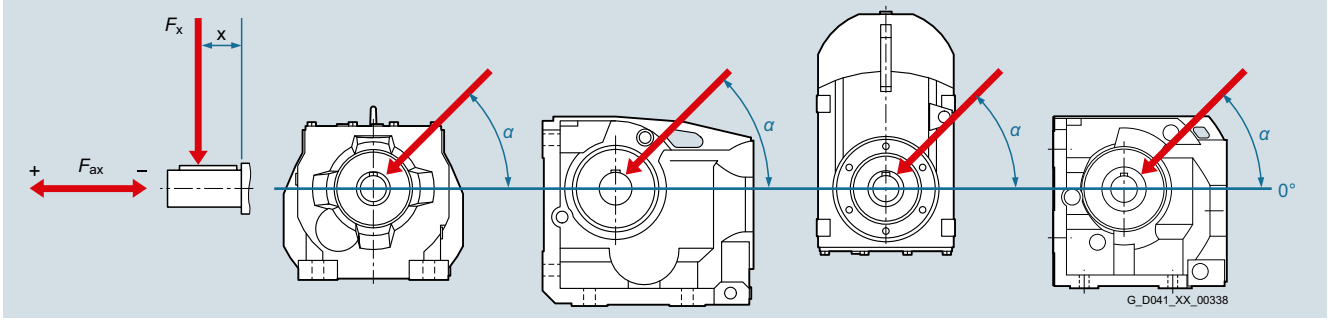

Fig. 2/4 Diagram showing force application point

© Siemens AG 2017

Shaft load and bearing service life (continued)

Radial force conversion for out of center force application point

If the force is not applied at the center of the shaft extension, the permissible radial force must be calculated using the following formula.

The lower value of F_{xperm1} (bearing service life) and F_{xperm2} (strength) is the permissible radial force. The calculation is applicable without axial force.

Permissible radial force according to the bearing service life

$$F_{xperm1} = F_{R2} \cdot \frac{y}{(z + x)}$$

Permissible radial force according to the shaft strength

$$F_{xperm2} = \frac{a}{(b + x)}$$

Gearbox constants for calculating the radial force

Gearbox size	Constants					
	y	z	a	b	d	l
	mm	mm	kNmm	mm	mm	mm
Helical gearboxes Z and D						
19	91	71	52.8	12	20	40
29	104	79	137	12	25	50
39	116	91	109	0	25	50
49	138	108	260	15	30	60
59	143.5	108.5	414	19	35	70
69	169	134	385	0	35	70
79	172.5	132.5	536	0	40	80
89	212.5	162.5	929	0	50	100
109	250	190	1 212	0	60	120
129	297	227	2 051	0	70	140
149	319	234	4 930	0	90	170
169	398	293	7 350	0	110	210
189	469	364	11 235	0	120	210
Helical gearbox E						
39	107	87	60	0	20	40
49	127.5	102.5	100	0	25	50
69	148.1	118.1	183	0	30	60
89	164.8	124.8	320	0	40	80
109	194.8	144.8	525	0	50	100
129	201.8	141.8	810	0	60	120
149	227.3	157.3	1 120	0	70	140
Parallel shaft gearbox F						
29	108.5	83.5	159	0	25	50
39	123.5	98.5	146	0	25	50
49	154.5	124.5	239	0	30	60
69	175	140	378	0	35	70
79	191	151	544	0	40	80
89	226	176	884	0	50	100
109	256	196	1 500	0	60	120
129	324	254	2 625	0	70	140
149	385	300	5 525	0	90	170
169	460	355	7 728	0	110	210
189	538	433	11 655	0	120	210
Bevel gearbox B						
19	97.5	77.5	38	0	20	40
29	117	97	83	0	20	40
39	143.5	113.5	209	0	30	60
49	175	140	392	0	35	70

© Siemens AG 2017

Shaft load and bearing service life (continued)

Gearbox constants for calculating the radial force

Gearbox size	Constants					
	y	z	a	b	d	l
	mm	mm	kNmm	mm	mm	mm
Bevel gearbox K						
39	123.5	98.5	152	0	25	50
49	154.5	124.5	235	0	30	60
69	175	140	378	0	35	70
79	191	151	556	0	40	80
89	226	176	916	0	50	100
109	256	196	1 470	0	60	120
129	324	254	2 800	0	70	140
149	385	300	5 525	0	90	170
169	459.5	354.5	7 350	0	110	210
189	538	433	10 920	0	120	210
Helical worm gearbox C						
29	117.5	97.5	84	0	20	40
39	123.5	98.5	157	0	25	50
49	154.5	124.5	236	0	30	60
69	171.5	136.5	410	0	35	70
89	220.0	175.0	736	0	45	90
Worm gearbox S						
09	83.5	63.5	36	0	16	40
19	98.0	78.0	76	0	20	40
29	120.5	100.5	72	0	20	40

Permissible torque for SIMOLOC assembly system

It is important to note that the maximum permissible torque is dependent on the selected machine shaft diameter.

Diameter of customer's shaft	Max. permissible torque T2					
	Nm					
	29	**39**	**49**	**69**	**79**	**89**
Metric shafts						
20	115					
25	150	205				
30		290	375			
35			480	460	840	
40				600	1 000	1 110
50						1 750
Imperial shafts						
0.75"	100					
1"	150	205				
1.1875"		290	375			
1.25"		290	415			
1.375"			480	460	840	
1.4375"			480	500	915	
1.5"				545	1 000	
1.625"				600	1 000	1 180
1.75"						1 375
1.9375"						1 680
2"						1 750

© Siemens AG 2017

Determining the duty type

The power ratings for continuous duty with constant load (duty type S1) are listed in the power tables. The motor power ratings listed in the catalog can be converted to the lower duty cycle using the corresponding k_{DC} factors for S1, S2, and S3 duty types.

$$P_{DC} = P_{rated} \cdot k_{DC}$$

Code	Description	Unit
P_{DC}	Power for the new duty cycle	kW
P_{rated}	Rated motor power	kW
k_{DC}	Factor for increased power	-

For increased power, you should note that the breakdown torque ratio must not fall below 1.6. This same regulation applies when differentiating between the following groups of duty types:

Duty types according to EN 60034-1 (IEC 60034-1)

Duty type	Description	Information required		Factor for increased power k_{DC}
S1	Continuous duty Cyclic duration factor = 100 %	-	-	-
S2	Constant load for a brief time, e.g. S2 - 30 min	Load duration	60 min	1.10
			30 min	1.20
			10 min	1.40
S3	Intermittent periodic duty, where starting has no significant influence (cyclic operation), e.g. S3 - 40 %	Cyclic duration factor in % (referred to 10 min)	60 %	1.10
			40 %	1.15
			25 %	1.30
			15 %	1.40
S4 ... S10	Intermittent periodic duty with the influence of starting	Cyclic duration factor in % (referred to 10 min), switch-on operations per hour, load torque and moment of inertia The duty type and motor power can be determined if the number of starting operations per hour, starting time, load duration, type of braking, braking time, idle time, cycle time, standstill time, and required power are specified.	On request	-

Operating modes

S1

Continuous duty with constant load

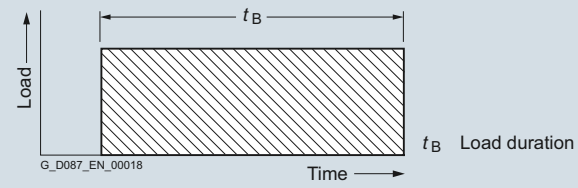

Fig. 2/5 Duty type S1

Where starting and electrical braking do not affect the stator winding temperature rise:

S2

Short-time duty

Recommendation: Operating times 10, 30, 60 and 90 minutes

After each period of duty the motor remains at zero current until the winding has cooled down to the coolant temperature.

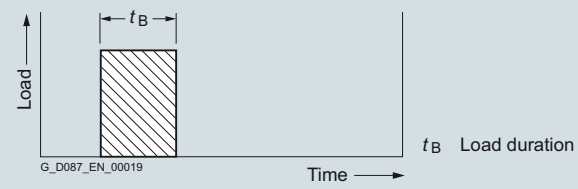

Fig. 2/6 Duty type S2

© Siemens AG 2017

Determining the duty type (continued)

Operating modes

Where starting and electrical braking do not affect the stator winding temperature rise:

S3

Intermittent duty

Where starting does not affect the temperature. Unless any agreement is made to the contrary, the cycle duration is 10 minutes. Values of 15 %, 25 %, 40 %, and 60 % are recommended for the cyclic duration factor.

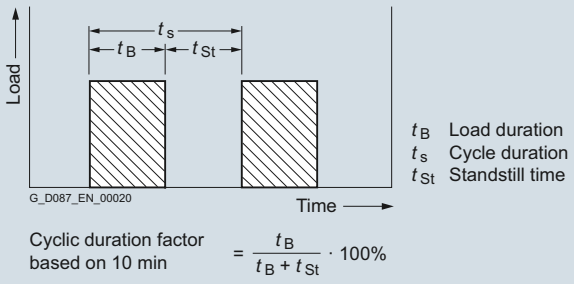

t_B Load duration
t_s Cycle duration
t_{St} Standstill time

Cyclic duration factor based on 10 min $= \frac{t_B}{t_B + t_{St}} \cdot 100\%$

Fig. 2/7 Duty type S3

S6

Continuous duty with intermittent load

The cycle duration, if nothing else has been agreed, is 10 minutes. Values of 15 %, 25 %, 40 %, and 60 % are recommended for the load duration factor.

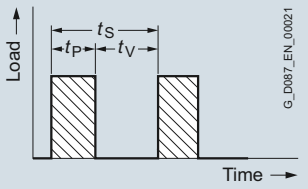

t_S Cycle duration
t_P Operating time with constant load
t_V Idle time

Cyclic duration factor $= \frac{t_P}{t_S}$

Fig. 2/8 Duty type S6

S10

Operation with discrete constant loads

In this case, a maximum of four discrete loads are available, where each load results in the thermal steady state. For this duty type, a load of the same value as the one used for the S1 duty type should be selected.

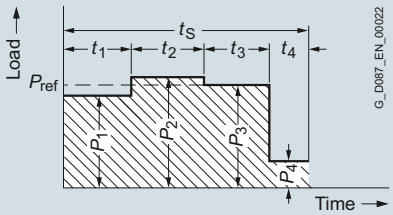

P_i Constant load within one load cycle
P_{ref} Reference load
t_S Cycle duration

Fig. 2/9 Duty type S10

Starting and braking influence the temperature rise of the stator winding and the rotor cage:

S4

Intermittent duty where starting influences the temperature

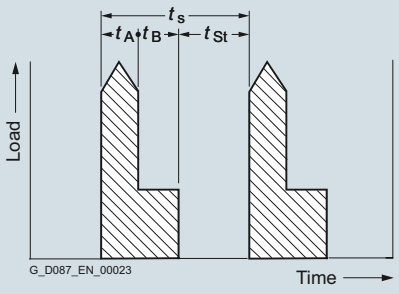

t_A Starting time
t_B Load duration
t_s Cycle duration
t_{St} Standstill time

Cyclic duration factor based on 10 min $= \frac{t_A + t_B}{t_A + t_B + t_{St}} \cdot 100\%$

Fig. 2/10 Duty type S4

© Siemens AG 2017

Determining the duty type (continued)

Duty types (continued)

Starting and braking influence the temperature rise of the stator winding and the rotor cage:

S5

Intermittent duty where starting and braking influences the temperature

For the **S4** and **S5 duty types**, this code should be followed by the cyclic duration factor, the moment of inertia of the motor (J_{mot}), and the moment of inertia of the load (J_x), both referred to the motor shaft.

The cycle duration, if nothing else has been agreed, is 10 minutes. Values of 15 %, 25 %, 40 %, and 60 % are recommended for the cyclic duration factor.

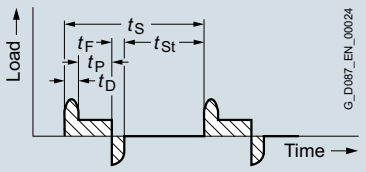

t_S Cycle duration
t_D Starting time
t_P Operating time with constant load
t_F Time with electrical braking
t_{St} Standstill time with windings at zero current

Cyclic duration factor $= \frac{t_D + t_P + t_F}{t_S}$

Fig. 2/11 Duty type S5

S7

Continuous duty with starting and braking

For S7 and S8 duty types, the moment of inertia of the load (J_x) referred to the motor shaft must be known.

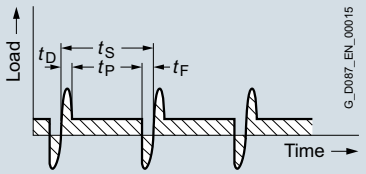

t_S Cycle duration
t_D Starting time
t_P Operating time with constant load
t_F Time with electrical braking

Cyclic duration factor = 1

Fig. 2/12 Duty type S7

S8

Continuous duty with non-periodic load and speed changes (inverter operation)

Most of the intermittent operating conditions occurring in practice are a combination of the above mentioned duty types. All of the operating conditions must be known in order to precisely determine a suitable motor.

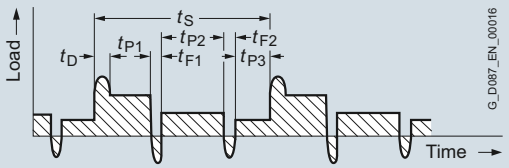

t_S Cycle duration
t_D Starting time
t_P Operating time with constant load (P1, P2, P3)
t_F Time with electrical braking (F1, F2)

Cyclic duration factor $= \frac{t_D + t_{P1}}{t_S} \cdot \frac{t_{F1} + t_{P2}}{t_S} \cdot \frac{t_{F2} + t_{P3}}{t_S}$

Fig. 2/13 Duty type S8

S9

Continuous duty with non-periodic load and speed changes (inverter operation)

Most of the intermittent operating conditions occurring in practice are a combination of the above mentioned duty types. All of the operating conditions must be known in order to precisely determine a suitable motor.

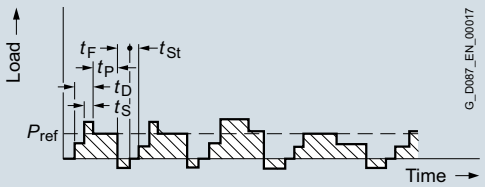

t_D Starting time
t_P Operating time with constant load
t_F Time with electrical braking
t_{St} Standstill time with windings at zero current
t_S Time with overload

Fig. 2/14 Duty type S9

© Siemens AG 2017

Number of starting operations

A higher number of starting operations means that the motor winding will be subject to a thermal load.

The permissible number of starting operations Z_{perm} has to be determined for different operating cases.

This value is influenced by the corresponding load torque, the additional moment of inertia, the power requirement, and the cyclic duration factor. These can be evaluated using the factors k_M, k_{FI} and k_P.

For 60 Hz operation, the calculated permissible switching frequency Z_{perm} must be reduced by 25 %. See the technical specifications for brakes in Chapter 10 for the permissible switching frequency for operation with function rectifiers.

The permissible no-load switching frequency Z_A for motors with brake L must be obtained from table "No-load switching frequency for brakes L" on page 11/38.

$Z_{perm} = Z_A \cdot k_M \cdot k_{FI} \cdot k_P$

The permissible no-load switching frequency Z_0 for motors without brakes must be obtained from the selection and ordering data page 8/14.

$Z_{perm} = Z_0 \cdot k_M \cdot k_{FI} \cdot k_P$

Code	Description	Unit
DC	Cyclic duration factor	%
J_{mot}	Moment of inertia of motor and brake	kgm^2
J_Z	Additional moment of inertia of a high inertia fan	kgm^2
J_X	Reduced moment of inertia on motor shaft	kgm^2
J_{add}	Additional moment of inertia	kgm^2
k_{FI}	Factor for taking into account the additional moment of inertia	-
k_M	Factor for taking into account the load torque while accelerating	-
k_P	Factor for taking into account the required power and duty cycle	-
P_S	Actual steady-state motor power	kW
P_{rated}	Rated motor power	kW
T_A	Acceleration torque of the motor	Nm
T_{rated}	Rated motor torque	Nm
T_x	Reduced load torque	Nm
t_R	Duty cycle (decimal)	
Z_A	No-load switching frequency, motor with brake	1/h
Z_0	No-load switching frequency, motor without brake	1/h
Z_{perm}	Permissible switching frequency	1/h

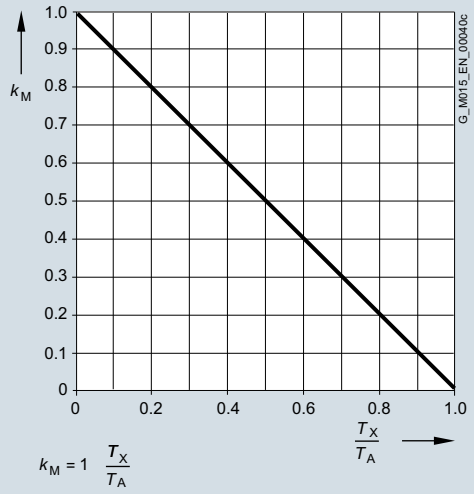

Fig. 2/15 Torque when accelerating

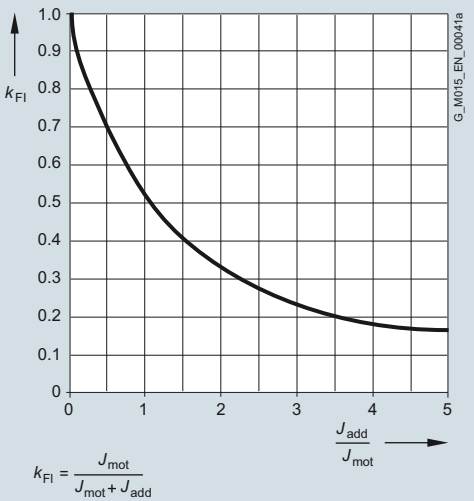

Fig. 2/16 Additional moment of inertia

$J_{add} = J_x + J_z$

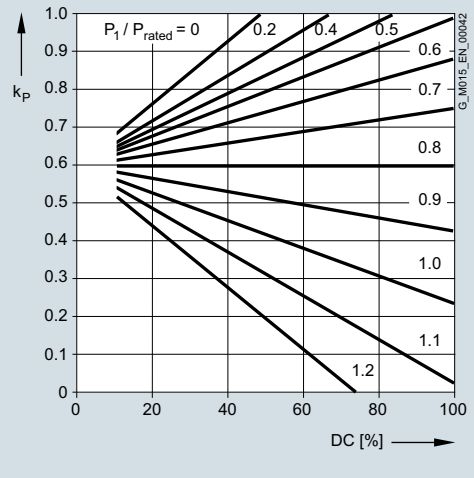

Fig. 2/17 Power requirement and duty cycle

$k_P = t_R \cdot (1 - (P_S / P_{rated})^2) + 0.6 \cdot (1 - t_R) + 0.24 \cdot t_R$

© Siemens AG 2017

Additional moments of inertia

The motor moment of inertia with standard fan is specified in the motor selection lists. The higher moment of inertia should be used for metal or high-inertia fans. This is also valid for mounted brakes, backstops and encoder systems.

Line feeder cables

Line feeder cables must be adequately dimensioned. The number of required parallel (if applicable) feeder cables is determined by the maximum connectable conductor cross-section, the type of cable, the cable installation, the ambient temperature and the permissible current. In Germany, DIN VDE 0298 must be applied when dimensioning cables.

Undervoltage

For an undervoltage condition as a result of weak line supplies, catalog values such as motor power, torque and speed are not reached. This is especially important when considering motor starting.

Motor protection

A distinction is made between current-dependent and temperature-dependent protective devices for motors.

Current-dependent protective devices

Fuses are only used to protect line cables in the event of a short-circuit. They are not suitable for protecting the motor against overload. The motors are usually protected by thermally-delayed overload protective devices (circuit breakers for motor protection or overload relays).

This protection is current-dependent and is particularly effective in the case of a locked rotor. For normal operation with short starting operations, starting currents that are not excessive and for low numbers of starting operations, motor circuit breakers provide adequate protection. Motor circuit breakers are not suitable for heavy duty starting or high numbers of starting operations. Differences in the thermal time constants for the protective devices and the motor results in unnecessary early tripping when the circuit breaker is set to the rated current.

Temperature-dependent protective devices

Temperature-dependent protective devices are integrated in the motor winding and can be implemented as **temperature sensors** and **temperature switches**.

The number of temperature-dependent protective devices depends on the number of windings and their function.

The alarm is normally set to 10 K below the switch-off temperature. The rated response temperatures of the protective devices depend on the thermal class of the motors.

In order to achieve full thermal protection it is necessary to combine a thermally-delayed overcurrent release and a PTC thermistor.

Coolant temperature and installation altitude

The rated power specified in the selection tables in Chapter 7 is valid for a coolant temperature of +40 °C and an installation altitude of 1 000 m above sea level.

Please contact Siemens for higher coolant temperatures.

The table with correction factors provides a rough idea of the derating required if conditions are different.

This results in a permissible motor power of:

$$P_{perm} = P_{rated} \cdot k_{HT}$$

Code	Description	Unit
P_{perm}	Permissible motor power	kW
P_{rated}	Rated motor power	kW
k_{HT}	Factor for abnormal coolant temperature and installation altitude	-

Factor k_{HT} for different installation altitude and coolant temperature

Installation altitude	**Coolant temperature**					
SA	**CT**					
m	< +30 °C	+30…+40 °C	+45 °C	+50 °C	+55 °C	+60 °C
1 000	1.07	1.00	0.96	0.92	0.87	0.82
1 500	1.04	0.97	0.93	0.89	0.84	0.79
2 000	1.00	0.94	0.90	0.86	0.82	0.77
2 500	0.96	0.90	0.86	0.83	0.78	0.74
3 000	0.92	0.86	0.82	0.79	0.75	0.70
3 500	0.88	0.82	0.79	0.75	0.71	0.67
4 000	0.82	0.77	0.74	0.71	0.67	0.63

© Siemens AG 2017

Degrees of protection

The motors are supplied in IP55 to standard IEC 60034-5. They can be installed in dusty or humid environments. The motors are suitable for operation in tropical climates. Guide value below 60 % relative air humidity for a coolant temperature of +40 °C.

Other requirements on request.

First digit	Brief description	Second digit	Brief description
4	The motor is protected against solid objects larger than 1 mm.	**4**	The motor is protected against water splashed from all sides.
5	The motor is protected against dust.	**5**	The motor is protected against strong jets of water
6	The machine is dust-tight.	**6**	The motor is protected against "heavy seas" or powerful jets of water.
		7	The motor is protected against immersion
		8	The motor is protected against long periods of immersion under pressure.

The first digit of the degree of protection indicates the degree to which an enclosure provides protection against contact and the ingress of foreign bodies.

The second digit indicates the protection that an enclosure offers regarding the ingress of water.

Increased corrosion protection as well as additional protective measures for the winding (protection against moisture and acid, corrosion protection in the motor) can support the selected degree of protection.

The degree of protection only refers to the motor. When selecting higher degrees of protection, the equipping on the gearbox side should be taken into account (seals, vents).

Cooling and ventilation

When the geared motor is mounted and the air intake is restricted, you must ensure that a minimum clearance is maintained between the fan cover and the wall and that the cooling air is not immediately drawn in again.

Further, it must be guaranteed that the cooling air flow to the gearbox is not obstructed. As a consequence, the gearbox operating temperature can be further reduced.

Forced ventilation

The use of a separately driven fan is recommended to increase motor utilization at low speeds and to limit noise generation at speeds significantly higher than the synchronous speed. Both are mainly used in conjunction with inverter operation.

Typical areas of application for forced ventilation:

- High number of starting operations
- Inverter drives with a control range > 1:20
- Inverter drives with rated torque at low speeds
- Noise reduction
- At high speeds

© Siemens AG 2017

Overview

The brakes can be used as working brakes or holding brakes. A holding brake is suitable for holding masses and loads at a fixed position. A working brake is also capable of decelerating masses and loads.

The brakes are designed as fail-safe spring-operated brakes. When the brake is mounted, it increases the length of the motor. The dimensions are shown in the dimensional drawings.
The spring-operated disk brakes are suitable for a standard ambient temperature range of -20 to +40 °C.

Variables

Code	Description	Unit
f_{br}	Braking torque correction factor	-
J_{AD}	Moment of inertia of the adapter	kgm²
J_G	Moment of inertia of the gearbox	kgm²
J_{mot}	Moment of inertia of the motor	kgm²
J_X	Moment of inertia of the load referred to the motor shaft	kgm²
J_Z	Additional moment of inertia of a high inertia fan	kgm²
k	Factor for taking into account operating conditions	-
L_{rated}	Service life of the brake lining until readjustment	h
$L_{ratedmax}$	Service life of the brake lining until replacement	h
n_{br}	Braking speed	rpm
η	Efficiency	%
Q_{perm}	Permissible operating energy	J
s_{br}	Braking distance	m
t_1	Application time of the brake	ms
t_{br}	Braking time	s
T_{br}	Rated braking torque	Nm
T_x	Reduced load torque	Nm
v	Travel velocity	m/s
W	Friction energy per braking operation	J
W_{tot}	Friction energy until the brake lining is replaced	MJ
W_V	Friction energy until the brake is readjusted	MJ
Z	Number of starting operations	1/h

Determining the braking torque

The braking torque must be selected in accordance with the particular drive application.
The following criteria are decisive when it comes to making this selection:

- Static safety
- Required braking time
- Permissible brake delay
- Possible braking distance
- Brake wear

The braking torque is determined using the safety factor k, which can be selected in the range 1.0 up to 2.5. As a general rule of thumb, the factor for horizontal motion is approx. 1.0 to 1.5 and for vertical motion approx. 2.0 to 2.5. However, the precise braking torque depends to a large extent on the particular operating conditions.

The rated braking torque is referred to a speed of n = 100 rpm and decreases with increasing motor speed. When calculating the braking torque, this is taken account using the correction factor f_{br}. This means that the rated braking torque is applicable for most braking operations for inverter operation.

For line operation, braking is directly from the motor speed. In addition, for vertical conveyors, the increased speed when moving downwards must be taken into account.

$$T_{br} > T_x \cdot k \cdot f_{br}$$

Braking torques as a function of the speed and permissible speed limits

The braking torque available decreases with increasing motor speed.

The maximum permissible speeds from which emergency stops can be made are listed in the table on page 11/35. These speeds should be considered as guide values and must be checked for the specific operating conditions.

The maximum permissible friction energy depends on the switching frequency and is shown for individual brakes in the diagram "Permissible operating energy" on page 11/35. Increased wear can be expected when the brakes are used for emergency stops.

Braking energy per braking operation

The braking energy W per braking operation comprises the energy of the moments of inertia to be braked and the energy which must be applied in order to brake against a load torque:

T_x is positive if the load torque is working against the braking torque (horizontal motion, upward vertical motion).

T_x is negative if it supports the brake (downward vertical motion).

The permissible operating energy Q_{perm} must be checked against the relevant switching frequency using the diagram "Permissible operating energy" on page 11/35. This is of particular importance for emergency-stop circuits.

$$W = \frac{T_{br}}{T_{br} \pm T_x \cdot \eta} \cdot \frac{(J_G + J_{AD} + J_{mot} + J_z + J_x \cdot \eta) \cdot n_{br}^2}{182.5}$$

$$W < Q_{perm}$$

Service life of the brake lining

The service life of the brake lining L_{rated} until the air gap has to be readjusted depends on various factors. The main influencing factors include the masses to be braked, the motor speed, the switching frequency, and, therefore, the temperature at the friction surfaces.

This means it is not possible to specify a value for the friction energy until readjustment that is valid for all operating conditions.
However, a wear calculation can be made according to the friction energy, so that the service life can be defined in normal operation.

Brake service life

The brake lining is subject to wear as a result of friction. As a consequence, the air gap increases and the brake application time lengthens. The air gap can be readjusted. The friction lining should be replaced after a certain number of readjustments.

Service life of the brake lining until readjustment

$$L_{rated} = \frac{W_V}{W \cdot Z}$$

Service life of the brake lining until replacement

$$L_{ratedmax} = \frac{W_{tot}}{W \cdot Z}$$

© Siemens AG 2017

Brake control

Definition of switching times (VDI 2241)

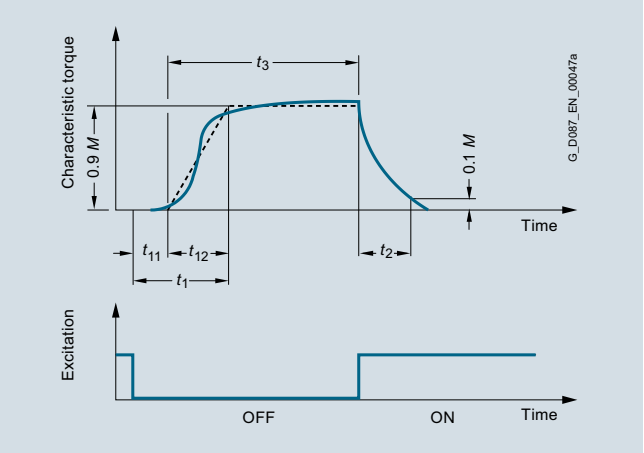

Fig. 2/18 Brake switching times

Switching times:

- t_1 Application time of the brake
- t_2 Disconnection time
- t_3 Slipping time
- t_{11} Response time
- t_{12} Rise time

Fast brake application

Disconnection on the AC side

If the brake is disconnected from the line supply, the brake is applied. With AC brake voltages, the brake application time is extended as a result of the inductance of the solenoid (disconnection on the AC side). This results in a considerable delay before the brake is mechanically applied. In order to achieve short brake application times, the circuit must also be disconnected on the DC side.

Rectifier for disconnection on the DC side

Electromagnetically released spring-operated disk brakes can be disconnected on the AC side and the DC side. Disconnection on the DC side means that the inductance and thus the magnetic field in the brake solenoid are reduced very quickly.

For disconnection on the DC side, a wire jumper can be removed from rectifier and replaced by the contacts of an external switch. This enables significantly shorter application times to be achieved than those achieved for disconnection on the AC side.

Function rectifiers for fast brake application

If function rectifiers are used for fast brake application, then there is no need for an external switch and therefore less wiring is required.

Disconnection on the DC side using current sensing

One option of disconnecting on the DC side is to sense the motor current. If the motor current falls below the rectifier's sensor current when disconnected from the three-phase line supply, the brake solenoid is disconnected from the DC voltage electronically without any contacts.

Used in conjunction with disconnection on the DC side by means of current sensing, rectifiers are generally suitable for being connected in parallel with the motor connection, even in applications involving moving loads or large moments of inertia.

Brakes controlled in this way are completely wired to the motor terminal board. Inverter operation is not permissible.

Disconnection on the DC side using voltage sensing

Another option of disconnecting on the DC side is by sensing the rectifier supply voltage.

An integrated switching transistor switches off the load if the input voltage falls below a specified switching threshold. Used in conjunction with disconnection on the DC side using voltage sensing, rectifiers are generally suitable for operation with separate AC-side brake control using an additional switching contact.

Connection in parallel with the motor connection is also possible, but it is not recommended, as the rectifier disconnection response will be impaired by the influence of the motor winding. In addition, many applications involve driving loads or large moments of inertia. This can cause the no-load voltage generated when the motor coasts down to considerably delay brake application if the switching threshold for voltage sensing is not fallen below.

If connection in parallel with the motor connection is nevertheless desired or required, disconnection on the DC side using current sensing is recommended.

Fast brake release

Function rectifiers for fast brake release

Rectifiers with overexcitation (high-speed excitation)

Rectifiers with overexcitation operate for approximately 300 ms ± 15 % with bridge rectification, i.e. when being released, the brakes are supplied with twice the rated solenoid voltage. After this time the rectifiers automatically switch from bridge to half-wave rectification and the brakes are operated with the rated solenoid voltage. This results in shorter release times and higher brake switching frequencies. The friction lining wear is also reduced, the permissible friction energy until the air gap is re-adjusted increases, and starting losses are reduced.

Rectifiers with overexcitation are generally suitable for being connected in parallel to the motor connection or for a separate circuit in the case of inverter operation (note connection information for disconnection on the DC side).

© Siemens AG 2017

Brake switching time

The total time it takes the motor to come to a standstill comprises the following times:

- Brake application time t_1
- Braking time t_{br}

The first is the time it takes the brake to reach 90 % of its braking torque. This time may be circuit- and control-dependent.
The braking time is determined as follows:

$$t_{br} = \frac{(J_G + J_{AD} + J_{mot} + J_z + J_x \cdot \eta) \cdot n_{br}}{9.55 \cdot (T_{br} \pm T_x \cdot \eta)}$$

If T_x supports the braking operation, T_x is positive, otherwise it is negative.

Braking distance and positioning accuracy

Braking distance s_{br} is the distance traveled by the driven machine during braking time t_{br} and application time t_1.

With linear motion, a positioning accuracy of between ± 12 % and ± 15 % can be assumed. However, this can be heavily influenced by the condition of the brake.

The formula below applies to horizontal motion and upward vertical motion.

$$s_{br} = v \cdot \left(\frac{t_1}{1000} + 0.5 \cdot t_{br} \right)$$

Cyclic duration factor

The cyclic duration factor *DC* is the ratio between the load duration and the cyclic duration. The cyclic duration is the sum of the ON times (operational periods) and the no-voltage periods.

$$DC = \frac{t_s}{t_s + t_O} \cdot 100$$

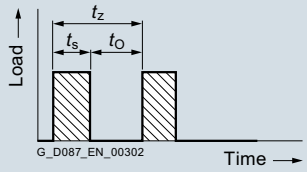

Fig. 2/19 Cyclic duration factor

Code	Description	Unit
DC	Cyclic duration factor	%
t_s	Close time (on-load factor)	s
t_O	Open time (off-load factor)	s
t_z	Cycle time (duty cycle time)	s

© Siemens AG 2017

Incremental encoders

Incremental encoders are used to determine the position of rotor shafts and are used to approach a precisely defined angular position. This is achieved by photoelectrically scanning the graduation on an indexing disk. With incremental measuring methods, the graduation consists of a regular grid structure. The position information is obtained by counting the individual increments (measuring steps) from a set zero point. Since an absolute reference is required to determine positions, the indexing disks are provided with an additional track that has a reference mark. The absolute position determined by the reference mark is assigned exactly one measuring step. The reference mark must, therefore, be scanned before an absolute reference can be established or the last selected reference point found.

The incremental signals are transmitted as square-wave pulse train sequences U_{a1} (A) and U_{a2} (B), phase-shifted through 90° elec. The reference mark signal consists of a reference pulse U_{a0} (N), which is gated with the incremental signals.
In addition, the integrated electronics generate inverse signals $\overline{U_{a1}}$ ($\overline{A}$), $\overline{U_{a2}}$ ($\overline{B}$) and $\overline{U_{a0}}$ ($\overline{N}$) for noise-proof transmission. The illustrated sequence of output signals – with U_{a2} lagging behind U_{a1} – applies for clockwise rotation of the motor.

The fault-detection signal $\overline{U_{aS}}$ indicates fault conditions such as breakage of the supply cables or failure of the light source, etc. It can be used to shut down machines in automated production environments.

The distance between two successive edges of the incremental signals U_{a1} and U_{a2} using 1-fold, 2-fold, or 4-fold evaluation is one measuring step.

The maximum permissible speed or travel velocity must never be exceeded, not even for a short time.

Incremental encoders are used with applications which require a precisely defined position to be approached/relocated. In the case of incremental encoders, the machine must travel to a reference point after each power-off state, as the position is not usually stored in the controller, and movements of the machine while the power is off are not recorded.

For the technical specifications of the incremental encoder, please refer to chapter "Motor options" on page 11/41.

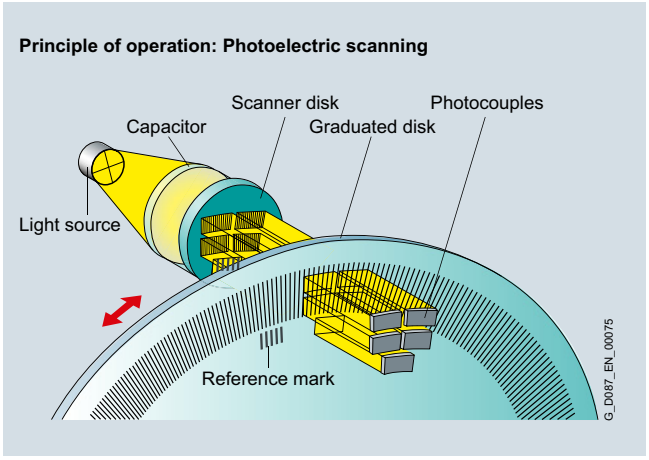

Fig. 2/20 Principle of operation, photoelectric scanning

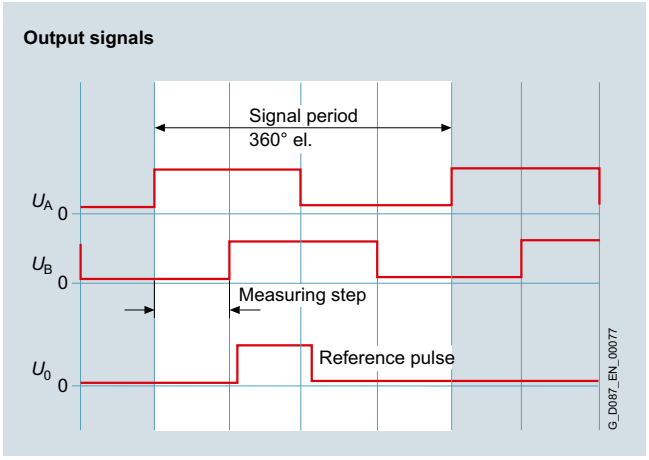

Fig. 2/21 Output signals

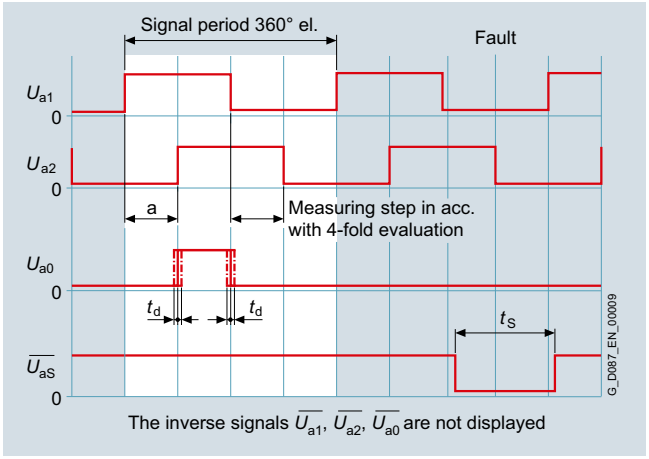

Fig. 2/22 Inverse output signals

© Siemens AG 2017

Resolvers

Resolvers are rotary measuring systems where the angle of rotation is inductively sensed without contact. They operate with analog measured value acquisition, i.e. a measuring signal value can be continuously assigned to each value of the measured variable.

The method of operation mainly corresponds to that of a rotary transformer consisting of rotor and stator. If an AC voltage is applied to the stator winding, the magnetic flux created in the rotor winding induces an amplitude-modulated voltage of the same frequency.
The amplitude change over time is modulated by the angle-dependent change of the rotor. The envelope curve shows the respective angle. At the zero crossing of these envelope ends, the modulated voltage makes a phase step of 180° el.

In practice, resolvers with several stator windings are generally used. The voltage at the secondary winding continuously changes with the spatial angle in the phase position with regard to the voltage at one of the primary windings. A phase discriminator delivers a signal that is proportional to the angle of rotation.

Resolvers are used for applications which do not require such accurate position sensing as is possible with incremental encoders due to their higher resolution. They are used under harsh conditions regarding vibration, shock loads, and/or temperature.

For the technical specifications of the resolver, please refer to chapter "Motor options" on page 11/44.

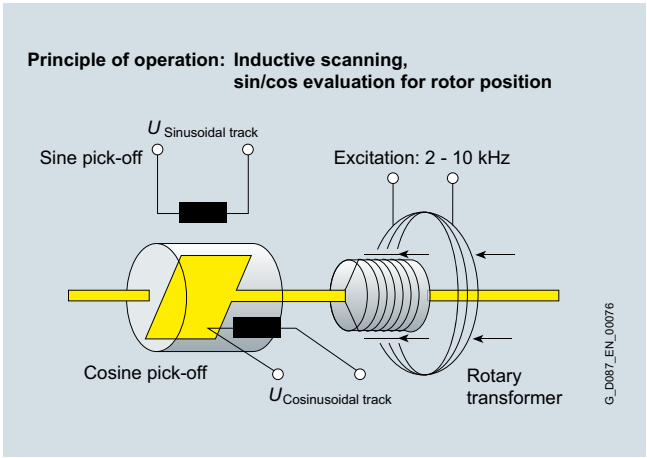

Fig. 2/23 Principle of operation, inductive scanning

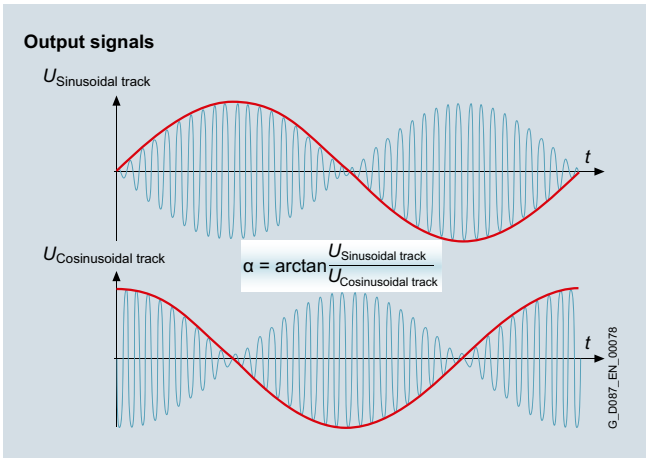

Fig. 2/24 Output signals

Absolute encoders

Absolute encoders are used to determine the position of rotor shafts and to approach a precisely defined angular position.

With the absolute measuring method, the position value is available from the encoder immediately after switch-on and can be called at any time by the subsequent electronics. There is no need to move the axes to find the reference position. The absolute position information is read from the graduation on the indexing disk, which consists of several parallel indexing tracks. The track with the finest scale division is interpolated for the position value and is used to generate an optional incremental signal at the same time. The indexing disks are photoelectrically scanned.

With singleturn rotary encoders the absolute position information is repeated at each revolution. Multiturn rotary encoders can also differentiate between revolutions.

Absolute encoders are used with applications which require a precisely defined position to be approached/relocated.

For the technical specifications of the absolute encoder, please refer to chapter "Motor options" on page 11/45.

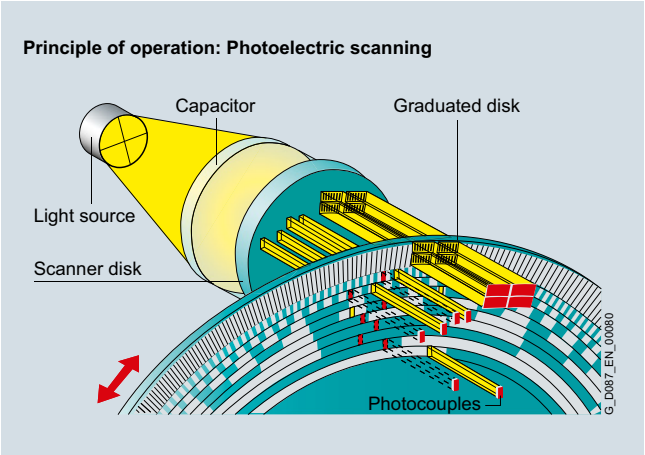

Fig. 2/25 Principle of operation, photoelectric scanning

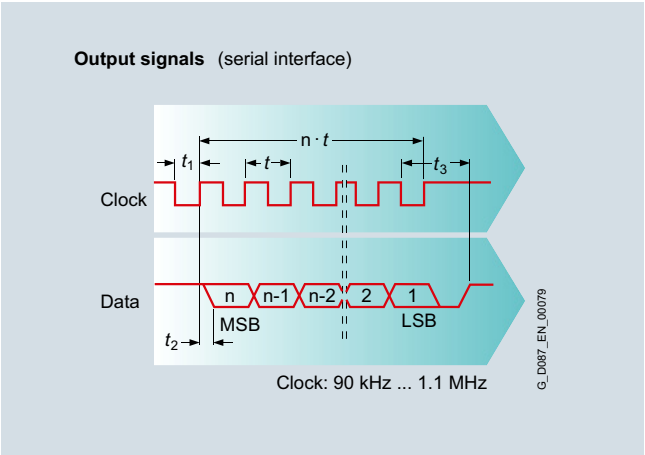

Fig. 2/26 Output signals

© Siemens AG 2017

Functionally safe rotary encoders



Fig. 2/27 Functionally safe rotary encoder IN 8.5834FS2

Legal framework

The purpose of the Machinery Directive (2006/42/EC) is to ensure that all machines placed on the market within the European Economic Area meet common minimum safety requirements.

Functional safety - electric drives

The standards listed under the Machinery Directive define appropriate safety functions that must be implemented for electric, variable-speed drive systems. When viewed in this context, a drive train essentially comprises the elements "sensor – controller – actuator" which work together to ensure functional safety.

The distributor or operator of the machine/installation bears responsibility for the required safety functions and their properties.

In cases where Siemens provides support with the definition of safety-relevant components at the project planning stage, Siemens shall not accept any responsibility for the selection of components or the implementation of safety functions.

Trend toward integrated safety systems

The trend toward greater complexity and higher modularity of machines has seen a shift in safety functions away from the classical central safety functions (for example, shutdown of the complete machine using a main disconnecting means) and into the machine control system and the drives. Frequently, this also significantly increases the productivity. This is because, for instance, equipping times can be reduced and during these set-up times, depending on the machine type, other parts can still continue to produce.

Please note the following with respect to functionally safe rotary encoders:

- Functional safety can be ensured only if the functionally safe rotary encoder is evaluated by a suitable control and evaluation unit.
- The motors must be equipped as standard with thermal motor protection and a suitable evaluation unit.
- The maximum permissible input speed is 3 000 rpm.
- The maximum permissible angular acceleration of the functionally safe rotary encoder is 4 000 rad/s^2
- The maximum permissible air gaps for brake motors with functionally safe rotary encoder are different, see table, "Technical specifications of brake with functionally safe rotary encoder" on page 11/53.
- The motors are supplied as standard with the option "Encoder under cover" (**Q95**) as mechanical protection.
- Brake motors with functionally safe rotary encoder are not compatible with option "wear-resistant friction lining" (**C03**).
- The functionally safe rotary encoder is suitable for typical industrial environments, but not for harsh industrial conditions such as those typical of offshore or chemical industry applications.
- Resonance effects must be avoided in systems supplied by an inverter or similar power control devices.

Environmental conditions

With respect to mechanical environmental conditions, the motors are approved for vibration and shocks in accordance with EN 60721-3-3 Class 3M3.
Geared motors with a functionally safe rotary encoder may be operated within an ambient temperature range of -20 °C to +40 °C.

Installation of SIMOGEAR geared motors

Geared motors must be installed such that the drive fastening elements in the machine are aligned uniformly and precisely. Vibration and resonance with rotational frequency and with multiples of the line frequency must be prevented. Care must be taken to ensure unobstructed ventilation (flow of cooling air and exhaust air must not be hindered).

Electrical connection of motors

The electrical connection of the motors must conform to the tolerance limits defined by EN 60034-1 for zone A (voltage ±5 %, frequency ±2 %).

Encoder connections

The encoders must be connected by suitable connecting cables (max. 50 m cable length). The shield of the connecting cables must be bonded over a large area/grounded at both ends (at encoder and at controller).

The following cables are recommended for use with SINAMICS S120 (SMC20):

Description	Article No.
Connecting cable for incremental encoders IN 8.5834FS2, IN 8.5834FS3	**6FX5002-2CG00-■■■■**
Connecting cable for absolute encoders IA 8.5883FS2, IA 8.5883FS3	**6FX5002-2CH00-■■■■**

For connectors for connecting cables, see chapter Motor options page 11/56.

Note:

Before you commission SIMOGEAR geared motors with the functionally safe rotary encoder, please read the information in operating instructions BA 2730.

© Siemens AG 2017

Functionally safe rotary encoders (continued)

Function

Safe actual value sensing with encoder

A drive monitor with encoder is necessary for operation of a series of safety functions.

Further information about safety functions can be found in the Safety Integrated Function Manual.
https://support.automation.siemens.com/WW/view/en/27103700/133300

Safe actual value sensing with functionally safe rotary encoder

A functionally safe rotary encoder (sensor) must be used in conjunction with a suitable encoder evaluation system (controller) and an inverter (actuator) in order to implement certain safety function.

Safety functions

The following safety functions can be implemented with the functionally safe rotary encoders integrated in SIMOGEAR:

- SS2: Safe Stop 2
- SOS: Safe Operating Stop
- SLS: Safely-Limited Speed
- SSM: Safe Speed Monitor
- SSR: Safe Speed Range
- SDI: Safe Direction
- SLA: Safely-Limited Acceleration
- SAR: Safe Acceleration Range
- SLI: Safely-Limited Increment
- SLP: Safely-Limited Position
- SCA: Safe Cam

For detailed descriptions of individual functions, please refer to Catalog D 31.

For the technical specifications of the functionally safe rotary encoder, please refer to chapter "Motor options" on page 11/49.

© Siemens AG 2017

Operation of geared motors on a frequency inverter

It is possible in principle to operate the geared motors on a frequency inverter.

Please note the following supplementary conditions:

- Maximum speed of the geared motor in the field weakening range
- Maximum speed of the brake, see page 11/35
- Speed limits of the backstop, see page 11/62

Motor characteristic

During the acceleration process, frequency inverters shift the speed-torque characteristic of the three-phase asynchronous motor over the traversing range to enable jerk-free acceleration. This enables the motor to be operated at different speeds (e.g. rapid traverse/creep speed), but also protects the mechanical components of the plant and gearbox.

Two main motor operating ranges are applicable for inverter operation:

Constant flux (constant torque)

For frequency inverters with an unregulated DC link (e.g. SINAMICS G110M) the output voltage can be as high as the line-side input voltage minus any voltage drops in the inverter (for example, for SINAMICS G110M: $U_{Output} = 0.87 \times U_{Input}$)
If the maximum output voltage has not yet been achieved, the inverter output voltage can be increased as the motor speed increases until **V/f = constant** applies. As a consequence, the magnetic flux, the motor current and therefore the transferred **continuous torque are constant** (provided that the motor is adequately cooled –> in the case of self-cooling, the torque must be reduced in accordance with the motor characteristic at low speeds due to the reduced cooling). Alternatively, if a separately driven fan is used, the full motor torque can be utilized.

Field-weakening range

If the speed increases further when the maximum output voltage has been reached, V/f ≠ remains constant. The magnetic flux reduces with increasing motor speed, the motor current and therefore the transferred continuous torque reduces with respect to 1/n, and the breakdown torque reduces according to $1/n^2$ (see motor characteristic). The motor can be operated in the field weakening range at constant power as far as the limit of stability (see under "Mechanical load, grease service life").

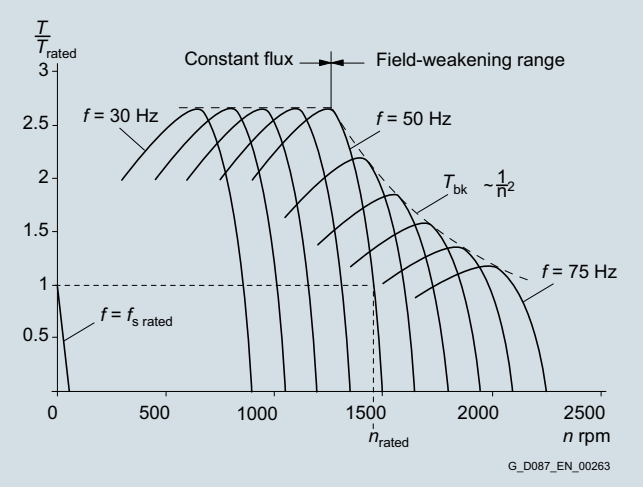

Fig. 2/28 Example for a 4-pole, three-phase asynchronous motor

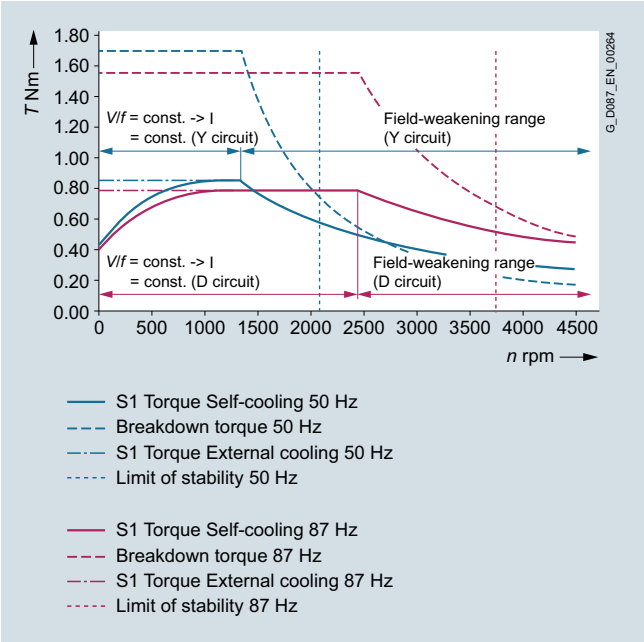

Fig. 2/29 Torque-speed characteristic for asynchronous motor (based on the example of LA63ME4)

Utilization in accordance with temperature class F

For rated power and line operation, the motor is utilized in accordance with temperature class B (130 °C maximum permissible constant temperature referred to a maximum cooling air temperature of 40 °C).
Siemens motors are designed as standard to temperature class F (155 °C maximum permissible constant temperature referred to a maximum cooling air temperature of 40 °C).

For inverter operation at reduced output voltage, the power reserve of the motor can be used to achieve the rated power.

In this case, the rated torque is applied to the motor and the frequency inverter outputs a frequency at which the motor achieves rated speed.

At this operating point the slip and current input are higher than under line operation, so that the constant motor temperature increases accordingly. Prerequisite for utilization of the motor in accordance with temperature class F is that the frequency inverter is capable of outputting a sufficiently high level of current:
$I_{FloutRated} \geq I_{Motor\ Rated\ Inc}$

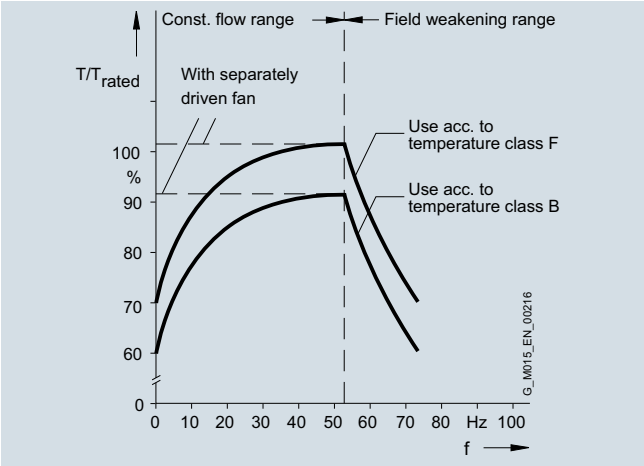

Fig. 2/30

© Siemens AG 2017

Peak load / acceleration torque

Based on experience, a safety margin of 30 % must be maintained from the breakdown torque:

$T_{max.} = 0.7 \times T_{bk}$

The engineering software "Sizer for Siemens Drives" incorporates a safety margin for the actual breakdown torque when the breakdown torque characteristic is displayed.

At a sufficiently high level of inverter output current, the motor can therefore be accelerated with approximately 0.7 times its breakdown torque.

When operating with a high switching frequency, the motor's acceleration torque may have to be limited to its rated torque. As a general rule, the rms current must not exceed the rated motor current. It is recommended that the respective traversing cycle is entered in the engineering software "Sizer for Siemens Drives", because the rms values will then be calculated automatically and represented in combination with the respective motor characteristic.

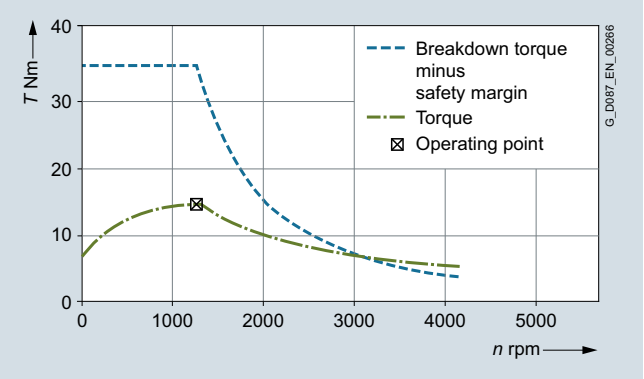

Fig. 2/31

Permissible voltage stress

More stress is placed on the insulation of the motor winding with inverter operation than with line operation. The voltage stress also depends on the type of inverter used. The inverter subjects the motor winding to stress specially as voltage pulses are quickly switched.

The maximum voltage is influenced by the rise time of the pulses, the cable length and the type of cable used between motor and inverter.

Output filters at the inverter can reduce the maximum motor voltage to uncritical values. When using output filters, the control type, pulse frequency, output frequency, and limit torque that can be realized need to be observed, among other factors.

With inverters without output filters, impermissible voltage peaks can occur even with a relatively short motor cable. Regenerative operation, in particular, can stress the motor insulation. This stress occurs predominantly during vertical motion and is dependent on the line voltage, inverter type, cable length, and cable type.

For further details, see chapter "Motor options" page 11/7.

Bearing currents

Additional bearing currents can flow when motors are operated from inverters. They are mainly caused by the steep voltage rises which occur during switching. Without output filters, significant voltage variations can occur at the winding terminals. This phenomenon mainly occurs for larger machines.

EMC-compliant installation of the drive system is a basic prerequisite for preventing premature bearing damage as a result of bearing currents.

Important measures for reducing bearing currents are:

- Using cables with a symmetrical cable cross-section.
- Using grounding cables with low impedance over a wide frequency range (0 Hz up to approximately 70 MHz), e.g. braided copper straps, HF finely-stranded conductors
- Separate HF equipotential-bonding cable between motor housing and driven machine
- Separate HF equipotential-bonding cable between motor housing and inverter PE busbar
- 360° HF contact of the cable shield at the motor housing and the inverter PE busbar. This can be achieved using EMC glands at the motor and EMC shield clips at the inverter, for example.
- Use of motor reactors
- Common-mode filters at the inverter output.
- Insulated motor bearing at the non-drive end (NDE).

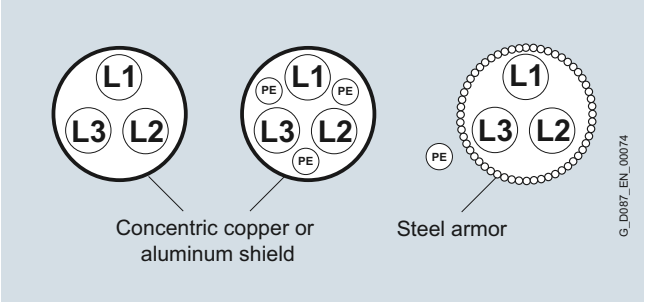

Fig. 2/32 Motors connected to an inverter

Mechanical load, grease service life

High speeds that exceed the rated speed and the resulting increased vibration alter the mechanical smooth running operation and the bearings are subject to increased mechanical stress. This reduces the grease service life and the bearing service life.

More detailed information on request.

© Siemens AG 2017

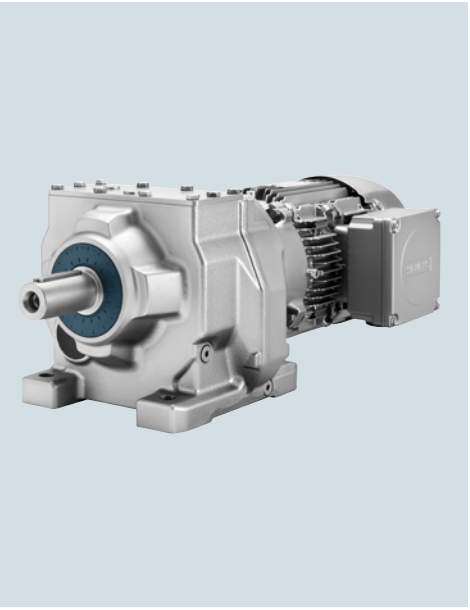

3/2 **Orientation**

3/3 **Geared motors up to 55 kW**
3/3 Selection and ordering data

3/74 **Transmission ratios and torques**
3/74 Selection and ordering data

3/87 **Transmission ratios and torques for high speeds**
3/87 Selection and ordering data

3/90 **Transmission ratios and torques for very low speeds**
3/90 Selection and ordering data

3/102 **Dimensions**
3/102 Dimensional drawing overview
3/104 Helical geared motors D./Z.19
3/107 Helical geared motors D./Z.29
3/111 Helical geared motors D./Z.39
3/115 Helical geared motors D./Z.49
3/118 Helical geared motors D./Z.59
3/121 Helical geared motors D./Z.69
3/124 Helical geared motors D./Z.79
3/127 Helical geared motors D./Z.89
3/130 Helical geared motors D./Z.109
3/133 Helical geared motors D./Z.129
3/136 Helical geared motors D./Z.149
3/138 Helical geared motors D./Z.169
3/140 Helical geared motors D./Z.189
3/142 Helical geared motors E.39
3/145 Helical geared motors E.49
3/148 Helical geared motors E.69
3/151 Helical geared motors E.89
3/154 Helical geared motors E.109
3/157 Helical geared motors E.129
3/160 Helical geared motors E.149
3/163 Helical tandem geared motors
3/164 Inner contour of the flange design

© Siemens AG 2017

Orientation

SIMOGEAR helical geared motor Z and D

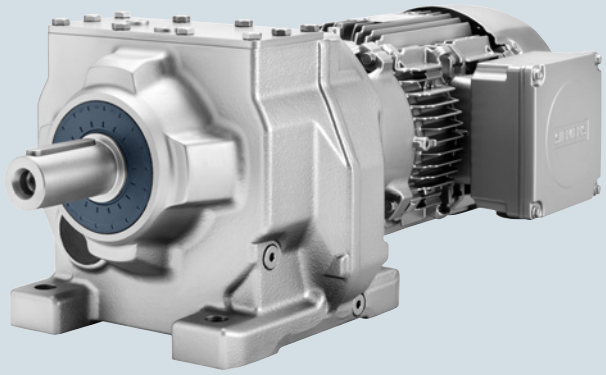

Fig. 3/1 Helical geared motor Z and D

SIMOGEAR helical geared motor E

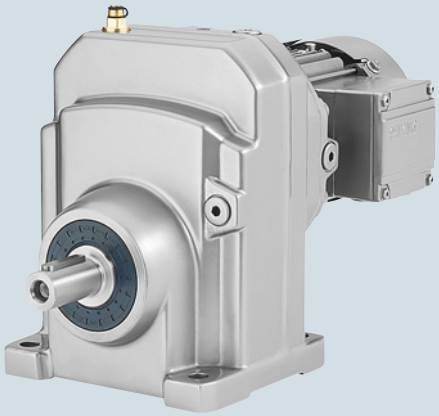

Bild 3/2 Helical geared motor E

Gearbox designation	Number of sizes	Maximum output torque	Gear ratio	Maximum motor power
		T_{2N}	i	P_1
		Nm	-	kW
Z19 … Z189 (2-stage)	13	100 … 19 000	3.4 … 57	55
D19 … D189 (3-stage)	13	100 … 19 000	36 … 328	55
E39 ... E149 (1-stage)	7	30 ... 1 490	1.29 ... 9.79	55
D-29-Z19 ... D.189-D69 (4-stage to 6-stage)	12	140 ... 19 000	325 ... 27 816	7.5

SIMOGEAR helical geared motors are available in the following versions:

Transmission stages

- 2-stage or 3-stage helical geared motors
- 1-stage helical geared motors for high output speeds
- 4-stage to 6-stage helical geared motors for very low output speeds

Versions

- Foot-mounted design
- Flange-mounted design
- Design with integrated housing flange
- Combined foot/flange-mounted design

© Siemens AG 2017

Selection and ordering data

P_{rated} kW	n_2 rpm	T_2 Nm	i -	F_{R2} N	f_B -	m kg	Article No. (Article No. supplement ➞ below)	Order code No. of poles
0.09	**D.69-LA63MF6**							
	2.6	330	328.49	11 400	1.8	27	**2KJ3206 - ■ BD11 - ■ ■ S1**	**P01**
	2.9	295	292.08	11 400	2.0	27	**2KJ3206 - ■ BD11 - ■ ■ R1**	**P01**
	D.59-LA63MF6							
	2.8	310	307.02	7 890	1.4	22	**2KJ3205 - ■ BD11 - ■ ■ S1**	**P01**
	3.1	275	272.99	7 950	1.6	22	**2KJ3205 - ■ BD11 - ■ ■ R1**	**P01**
	3.5	240	239.70	8 000	1.9	22	**2KJ3205 - ■ BD11 - ■ ■ Q1**	**P01**
	3.9	220	217.91	8 030	2.0	22	**2KJ3205 - ■ BD11 - ■ ■ P1**	**P01**
	D.49-LA63MF6							
	3.0	280	280.89	5 980	1.1	20	**2KJ3204 - ■ BD11 - ■ ■ S1**	**P01**
	3.4	250	249.76	6 040	1.3	20	**2KJ3204 - ■ BD11 - ■ ■ R1**	**P01**
	3.9	220	219.30	6 100	1.4	20	**2KJ3204 - ■ BD11 - ■ ■ Q1**	**P01**
	4.3	200	199.36	6 150	1.6	20	**2KJ3204 - ■ BD11 - ■ ■ P1**	**P01**
	D.49-LA63MD4							
	5.0	172	280.89	6 200	1.9	19	**2KJ3204 - ■ BB11 - ■ ■ S1**	
	5.6	153	249.76	6 240	2.1	19	**2KJ3204 - ■ BB11 - ■ ■ R1**	
	D.39-LA63MF6							
	3.6	235	235.29	3 490	0.84	10	**2KJ3203 - ■ BD11 - ■ ■ R1**	**P01**
	4.1	210	208.69	4 120	0.95	10	**2KJ3203 - ■ BD11 - ■ ■ Q1**	**P01**
	4.7	183	181.07	4 790	1.1	10	**2KJ3203 - ■ BD11 - ■ ■ P1**	**P01**
	5.2	166	164.61	5 220	1.2	10	**2KJ3203 - ■ BD11 - ■ ■ N1**	**P01**
	D.39-LA63MD4							
	6.0	144	235.29	5 770	1.4	10	**2KJ3203 - ■ BB11 - ■ ■ R1**	
	6.7	128	208.69	5 800	1.6	10	**2KJ3203 - ■ BB11 - ■ ■ Q1**	
	7.7	111	181.07	5 800	1.8	10	**2KJ3203 - ■ BB11 - ■ ■ P1**	
	8.5	101	164.61	5 800	2.0	10	**2KJ3203 - ■ BB11 - ■ ■ N1**	
	D.29-LA63MF6							
	5.1	170	167.63	2 910	0.83	8	**2KJ3202 - ■ BD11 - ■ ■ N1**	**P01**
	5.6	154	152.39	3 340	0.91	8	**2KJ3202 - ■ BD11 - ■ ■ M1**	**P01**
	D.29-LA63MD4							
	6.4	134	217.89	3 870	1.0	8	**2KJ3202 - ■ BB11 - ■ ■ Q1**	
	7.3	118	192.93	4 060	1.2	8	**2KJ3202 - ■ BB11 - ■ ■ P1**	
	8.4	103	167.63	4 060	1.4	8	**2KJ3202 - ■ BB11 - ■ ■ N1**	
	9.2	94	152.39	4 060	1.5	8	**2KJ3202 - ■ BB11 - ■ ■ M1**	
	11	80	129.68	4 060	1.8	8	**2KJ3202 - ■ BB11 - ■ ■ L1**	
	12	72	117.89	4 060	1.9	8	**2KJ3202 - ■ BB11 - ■ ■ K1**	
	14	63	102.79	4 060	2.2	8	**2KJ3202 - ■ BB11 - ■ ■ J1**	
	15	56	92.01	4 060	2.5	8	**2KJ3202 - ■ BB11 - ■ ■ H1**	
	17	50	81.71	4 060	2.8	8	**2KJ3202 - ■ BB11 - ■ ■ G1**	
	19	46	75.42	4 060	3.0	8	**2KJ3202 - ■ BB11 - ■ ■ F1**	
	21	40	65.52	4 060	3.5	8	**2KJ3202 - ■ BB11 - ■ ■ E1**	
	25	35	56.93	4 060	4.0	8	**2KJ3202 - ■ BB11 - ■ ■ D1**	
	27	32	51.40	4 060	4.4	8	**2KJ3202 - ■ BB11 - ■ ■ C1**	
	29	30	48.37	4 060	4.7	8	**2KJ3202 - ■ BB11 - ■ ■ B1**	
	Z.29-LA63MD4							
	34	25	41.40	4 060	5.5	8	**2KJ3102 - ■ BB11 - ■ ■ A2**	
	38	22	36.72	4 060	6.2	8	**2KJ3102 - ■ BB11 - ■ ■ X1**	
	44	20	31.86	4 060	7.2	8	**2KJ3102 - ■ BB11 - ■ ■ W1**	

Article No. supplement		
Shaft design	**1 or 9**	➞ page 10/43
Frequency and voltage	**2 or 9**	➞ page 11/2
Gearbox mounting type	**A, B, F or H**	➞ page 10/37

© Siemens AG 2017

3

Selection and ordering data (continued)

P_{rated} kW	n_2 rpm	T_2 Nm	i -	F_{R2} N	f_B -	m kg	Article No. (Article No. supplement ➞ below)	Order code No. of poles
0.09	**Z.29-LA63MD4**							
	48	18	28.96	4 060	7.9	8	**2KJ3102 - ■ BB11 - ■ ■ V1**	
	56	15	24.84	4 060	9.2	8	**2KJ3102 - ■ BB11 - ■ ■ U1**	
	62	14	22.58	4 020	10	8	**2KJ3102 - ■ BB11 - ■ ■ T1**	
	71	12	19.80	3 850	12	8	**2KJ3102 - ■ BB11 - ■ ■ S1**	
	79	11	17.67	3 710	13	8	**2KJ3102 - ■ BB11 - ■ ■ R1**	
	89	10	15.75	3 580	14	8	**2KJ3102 - ■ BB11 - ■ ■ Q1**	
	96	9	14.54	3 490	13	8	**2KJ3102 - ■ BB11 - ■ ■ P1**	
	D.19-LA63MD4							
	7.6	113	184.86	1 390	0.88	7	**2KJ3201 - ■ BB11 - ■ ■ Q1**	
	8.6	100	163.69	1 650	1.0	7	**2KJ3201 - ■ BB11 - ■ ■ P1**	
	9.8	87	142.23	1 920	1.1	7	**2KJ3201 - ■ BB11 - ■ ■ N1**	
	11	79	129.30	2 080	1.3	7	**2KJ3201 - ■ BB11 - ■ ■ M1**	
	13	68	110.02	2 290	1.5	7	**2KJ3201 - ■ BB11 - ■ ■ L1**	
	14	61	100.02	2 330	1.6	7	**2KJ3201 - ■ BB11 - ■ ■ K1**	
	16	54	87.21	2 360	1.9	7	**2KJ3201 - ■ BB11 - ■ ■ J1**	
	18	48	78.07	2 390	2.1	7	**2KJ3201 - ■ BB11 - ■ ■ H1**	
	20	43	69.32	2 420	2.3	7	**2KJ3201 - ■ BB11 - ■ ■ G1**	
	22	39	63.99	2 440	2.5	7	**2KJ3201 - ■ BB11 - ■ ■ F1**	
	25	34	55.59	2 460	2.9	7	**2KJ3201 - ■ BB11 - ■ ■ E1**	
	29	30	48.30	2 480	3.4	7	**2KJ3201 - ■ BB11 - ■ ■ D1**	
	32	27	43.61	2 500	3.7	7	**2KJ3201 - ■ BB11 - ■ ■ C1**	
	34	25	41.04	2 510	4.0	7	**2KJ3201 - ■ BB11 - ■ ■ B1**	
	Z.19-LA63MD4							
	40	22	34.97	2 520	4.7	6	**2KJ3101 - ■ BB11 - ■ ■ W1**	
	45	19	30.97	2 540	5.3	6	**2KJ3101 - ■ BB11 - ■ ■ V1**	
	52	16	26.91	2 550	6.1	6	**2KJ3101 - ■ BB11 - ■ ■ U1**	
	57	15	24.46	2 560	6.7	6	**2KJ3101 - ■ BB11 - ■ ■ T1**	
	67	13	20.82	2 570	7.8	6	**2KJ3101 - ■ BB11 - ■ ■ S1**	
	74	12	18.92	2 530	8.6	6	**2KJ3101 - ■ BB11 - ■ ■ R1**	
	85	10	16.50	2 420	9.8	6	**2KJ3101 - ■ BB11 - ■ ■ Q1**	
	95	9	14.77	2 340	10	6	**2KJ3101 - ■ BB11 - ■ ■ P1**	
	107	8	13.12	2 250	11	6	**2KJ3101 - ■ BB11 - ■ ■ N1**	
	116	7	12.11	2 200	12	6	**2KJ3101 - ■ BB11 - ■ ■ M1**	
	133	7	10.52	2 100	13	6	**2KJ3101 - ■ BB11 - ■ ■ L1**	
	153	6	9.14	2 010	14	6	**2KJ3101 - ■ BB11 - ■ ■ K1**	
	170	5	8.25	1 940	15	6	**2KJ3101 - ■ BB11 - ■ ■ J1**	
	180	5	7.76	1 910	15	6	**2KJ3101 - ■ BB11 - ■ ■ H1**	
	224	4	6.25	1 760	15	6	**2KJ3101 - ■ BB11 - ■ ■ F1**	
0.12	**D.69-LA63MG6**							
	3.0	375	328.49	11 300	1.6	27	**2KJ3206 - ■ BE11 - ■ ■ S1**	**P01**
	3.4	335	292.08	11 400	1.8	27	**2KJ3206 - ■ BE11 - ■ ■ R1**	**P01**
	3.9	290	256.46	11 400	2.0	27	**2KJ3206 - ■ BE11 - ■ ■ Q1**	**P01**
	D.59-LA63MG6							
	3.3	350	307.02	7 820	1.3	22	**2KJ3205 - ■ BE11 - ■ ■ S1**	**P01**
	3.7	310	272.99	7 890	1.4	22	**2KJ3205 - ■ BE11 - ■ ■ R1**	**P01**
	4.2	275	239.70	7 950	1.6	22	**2KJ3205 - ■ BE11 - ■ ■ Q1**	**P01**

Article No. supplement		
Shaft design	**1 or 9**	➞ page 10/43
Frequency and voltage	**2 or 9**	➞ page 11/2
Gearbox mounting type	**A, B, F or H**	➞ page 10/37

© Siemens AG 2017

Selection and ordering data (continued)

P_{rated}	n_2	T_2	i	F_{R2}	f_B	m	Article No.	Order code
kW	rpm	Nm	-	N	-	kg	(Article No. supplement ➞ below)	No. of poles
0.12	**D.59-LA63ME4**							
	4.4	260	307.02	7 970	1.7	22	**2KJ3205 - ■ BC11 - ■ ■ S1**	
	4.9	230	272.99	8 020	1.9	22	**2KJ3205 - ■ BC11 - ■ ■ R1**	
	D.49-LA63MG6							
	3.6	320	280.89	5 780	0.99	20	**2KJ3204 - ■ BE11 - ■ ■ S1**	**P01**
	4.0	285	249.76	5 970	1.1	20	**2KJ3204 - ■ BE11 - ■ ■ R1**	**P01**
	4.6	250	219.30	6 040	1.3	20	**2KJ3204 - ■ BE11 - ■ ■ Q1**	**P01**
	D.49-LA63ME4							
	4.8	235	280.89	6 070	1.3	19	**2KJ3204 - ■ BC11 - ■ ■ S1**	
	5.4	210	249.76	6 120	1.5	19	**2KJ3204 - ■ BC11 - ■ ■ R1**	
	6.2	186	219.30	6 170	1.7	19	**2KJ3204 - ■ BC11 - ■ ■ Q1**	
	6.8	169	199.36	6 210	1.9	19	**2KJ3204 - ■ BC11 - ■ ■ P1**	
	D.39-LA63MG6							
	4.8	235	208.69	3 490	0.84	10	**2KJ3203 - ■ BE11 - ■ ■ Q1**	**P01**
	5.5	205	181.07	4 240	0.96	10	**2KJ3203 - ■ BE11 - ■ ■ P1**	**P01**
	D.39-LA63ME4							
	5.7	200	235.29	4 370	1.0	10	**2KJ3203 - ■ BC11 - ■ ■ R1**	
	6.5	177	208.69	4 940	1.1	10	**2KJ3203 - ■ BC11 - ■ ■ Q1**	
	7.5	154	181.07	5 510	1.3	10	**2KJ3203 - ■ BC11 - ■ ■ P1**	
	8.2	140	164.61	5 800	1.4	10	**2KJ3203 - ■ BC11 - ■ ■ N1**	
	9.6	120	141.17	5 800	1.7	10	**2KJ3203 - ■ BC11 - ■ ■ M1**	
	11	109	128.34	5 800	1.8	10	**2KJ3203 - ■ BC11 - ■ ■ L1**	
	12	96	112.53	5 800	2.1	10	**2KJ3203 - ■ BC11 - ■ ■ K1**	
	D.29-LA63MG6							
	6.6	175	152.39	2 780	0.8	8	**2KJ3202 - ■ BE11 - ■ ■ M1**	**P01**
	D.29-LA63ME4							
	7.0	164	192.93	3 070	0.85	8	**2KJ3202 - ■ BC11 - ■ ■ P1**	
	8.1	142	167.63	3 650	0.98	8	**2KJ3202 - ■ BC11 - ■ ■ N1**	
	8.9	129	152.39	4 000	1.1	8	**2KJ3202 - ■ BC11 - ■ ■ M1**	
	10	110	129.68	4 060	1.3	8	**2KJ3202 - ■ BC11 - ■ ■ L1**	
	11	100	117.89	4 060	1.4	8	**2KJ3202 - ■ BC11 - ■ ■ K1**	
	13	87	102.79	4 060	1.6	8	**2KJ3202 - ■ BC11 - ■ ■ J1**	
	15	78	92.01	4 060	1.8	8	**2KJ3202 - ■ BC11 - ■ ■ H1**	
	17	69	81.71	4 060	2.0	8	**2KJ3202 - ■ BC11 - ■ ■ G1**	
	18	64	75.42	4 060	2.2	8	**2KJ3202 - ■ BC11 - ■ ■ F1**	
	21	56	65.52	4 060	2.5	8	**2KJ3202 - ■ BC11 - ■ ■ E1**	
	24	48	56.93	4 060	2.9	8	**2KJ3202 - ■ BC11 - ■ ■ D1**	
	26	44	51.40	4 060	3.2	8	**2KJ3202 - ■ BC11 - ■ ■ C1**	
	28	41	48.37	4 060	3.4	8	**2KJ3202 - ■ BC11 - ■ ■ B1**	
	Z.29-LA63ME4							
	33	35	41.40	4 060	4.0	8	**2KJ3102 - ■ BC11 - ■ ■ A2**	
	37	31	36.72	4 060	4.5	8	**2KJ3102 - ■ BC11 - ■ ■ X1**	
	42	27	31.86	4 060	5.2	8	**2KJ3102 - ■ BC11 - ■ ■ W1**	
	47	25	28.96	4 060	5.7	8	**2KJ3102 - ■ BC11 - ■ ■ V1**	
	54	21	24.84	4 060	6.6	8	**2KJ3102 - ■ BC11 - ■ ■ U1**	
	60	19	22.58	4 040	7.3	8	**2KJ3102 - ■ BC11 - ■ ■ T1**	
	68	17	19.80	3 870	8.3	8	**2KJ3102 - ■ BC11 - ■ ■ S1**	
	76	15	17.67	3 740	9.3	8	**2KJ3102 - ■ BC11 - ■ ■ R1**	
	86	13	15.75	3 600	10	8	**2KJ3102 - ■ BC11 - ■ ■ Q1**	
	93	12	14.54	3 510	9.7	8	**2KJ3102 - ■ BC11 - ■ ■ P1**	

Article No. supplement		
Shaft design	**1 or 9**	➞ page 10/43
Frequency and voltage	**2 or 9**	➞ page 11/2
Gearbox mounting type	**A, B, F or H**	➞ page 10/37

© Siemens AG 2017

3

Selection and ordering data (continued)

P_{rated} kW	n_2 rpm	T_2 Nm	i -	F_{R2} N	f_B -	m kg	Article No. (Article No. supplement ➞ below)	Order code No. of poles
0.25	**Z.29-LA63ME4**							
	106	11	12.73	3 360	13	8	**2KJ3102 - ■ BC11 - ■ ■ N1**	
	121	10	11.16	3 220	15	8	**2KJ3102 - ■ BC11 - ■ ■ M1**	
	195	6	6.92	2 750	13	8	**2KJ3102 - ■ BC11 - ■ ■ G1**	
	D.19-LA63ME4							
	9.5	121	142.23	1 220	0.83	7	**2KJ3201 - ■ BC11 - ■ ■ N1**	
	10	110	129.30	1 450	0.91	7	**2KJ3201 - ■ BC11 - ■ ■ M1**	
	12	93	110.02	1 800	1.1	7	**2KJ3201 - ■ BC11 - ■ ■ L1**	
	13	85	100.02	1 960	1.2	7	**2KJ3201 - ■ BC11 - ■ ■ K1**	
	15	74	87.21	2 180	1.4	7	**2KJ3201 - ■ BC11 - ■ ■ J1**	
	17	66	78.07	2 300	1.5	7	**2KJ3201 - ■ BC11 - ■ ■ H1**	
	19	59	69.32	2 340	1.7	7	**2KJ3201 - ■ BC11 - ■ ■ G1**	
	21	54	63.99	2 360	1.8	7	**2KJ3201 - ■ BC11 - ■ ■ F1**	
	24	47	55.59	2 400	2.1	7	**2KJ3201 - ■ BC11 - ■ ■ E1**	
	28	41	48.30	2 430	2.4	7	**2KJ3201 - ■ BC11 - ■ ■ D1**	
	31	37	43.61	2 450	2.7	7	**2KJ3201 - ■ BC11 - ■ ■ C1**	
	33	35	41.04	2 460	2.9	7	**2KJ3201 - ■ BC11 - ■ ■ B1**	
	Z.19-LA63ME4							
	39	30	34.97	2 480	3.4	6	**2KJ3101 - ■ BC11 - ■ ■ W1**	
	44	26	30.97	2 500	3.8	6	**2KJ3101 - ■ BC11 - ■ ■ V1**	
	50	23	26.91	2 520	4.4	6	**2KJ3101 - ■ BC11 - ■ ■ U1**	
	55	21	24.46	2 530	4.8	6	**2KJ3101 - ■ BC11 - ■ ■ T1**	
	65	18	20.82	2 540	5.7	6	**2KJ3101 - ■ BC11 - ■ ■ S1**	
	71	16	18.92	2 530	6.2	6	**2KJ3101 - ■ BC11 - ■ ■ R1**	
	82	14	16.50	2 430	7.1	6	**2KJ3101 - ■ BC11 - ■ ■ Q1**	
	91	12	14.77	2 350	7.6	6	**2KJ3101 - ■ BC11 - ■ ■ P1**	
	103	11	13.12	2 260	8.2	6	**2KJ3101 - ■ BC11 - ■ ■ N1**	
	111	10	12.11	2 210	8.6	6	**2KJ3101 - ■ BC11 - ■ ■ M1**	
	128	9	10.52	2 110	9.3	6	**2KJ3101 - ■ BC11 - ■ ■ L1**	
	148	8	9.14	2 020	10	6	**2KJ3101 - ■ BC11 - ■ ■ K1**	
	164	7	8.25	1 950	11	6	**2KJ3101 - ■ BC11 - ■ ■ J1**	
	174	7	7.76	1 920	11	6	**2KJ3101 - ■ BC11 - ■ ■ H1**	
	199	6	6.77	1 830	12	6	**2KJ3101 - ■ BC11 - ■ ■ G1**	
	216	5	6.25	1 770	11	6	**2KJ3101 - ■ BC11 - ■ ■ F1**	
	249	5	5.43	1 690	12	6	**2KJ3101 - ■ BC11 - ■ ■ E1**	
	287	4	4.71	1 620	12	6	**2KJ3101 - ■ BC11 - ■ ■ D1**	
	317	4	4.26	1 570	13	6	**2KJ3101 - ■ BC11 - ■ ■ C1**	
	337	3	4.01	1 540	14	6	**2KJ3101 - ■ BC11 - ■ ■ B1**	
	E.39-LA63ME4							
	146	8	9.22	3 000	3.8	10	**2KJ3001 - ■ BC11 - ■ ■ S1**	
0.18	**D.79-LA71MG6**							
	2.6	665	330.23	13 600	1.3	38	**2KJ3207 - ■ CD11 - ■ ■ S1**	**P01**
	2.8	605	300.21	13 700	1.4	38	**2KJ3207 - ■ CD11 - ■ ■ R1**	**P01**
	3.3	515	255.33	13 800	1.6	38	**2KJ3207 - ■ CD11 - ■ ■ Q1**	**P01**
	3.7	465	232.12	13 900	1.8	38	**2KJ3207 - ■ CD11 - ■ ■ P1**	**P01**
	D.69-LA71MG6							
	2.6	660	328.49	10 800	0.90	28	**2KJ3206 - ■ CD11 - ■ ■ S1**	**P01**
	2.9	590	292.08	11 000	1.0	28	**2KJ3206 - ■ CD11 - ■ ■ R1**	**P01**
	3.3	515	256.46	11 100	1.2	28	**2KJ3206 - ■ CD11 - ■ ■ Q1**	**P01**
	3.6	470	233.14	11 200	1.3	28	**2KJ3206 - ■ CD11 - ■ ■ P1**	**P01**

Article No. supplement		
Shaft design	**1 or 9**	➞ page 10/43
Frequency and voltage	**2 or 9**	➞ page 11/2
Gearbox mounting type	**A, B, F or H**	➞ page 10/37

© Siemens AG 2017

Selection and ordering data (continued)

P_{rated}	n_2	T_2	i	F_{R2}	f_B	m	Article No.	Order code
kW	rpm	Nm	-	N	-	kg	(Article No. supplement ➞ below)	No. of poles
0.18	**D.69-LA63MF4**							
	4.1	415	328.49	11 200	1.4	27	**2KJ3206 - ■ BD11 - ■ ■ S1**	
	4.6	370	292.08	11 300	1.6	27	**2KJ3206 - ■ BD11 - ■ ■ R1**	
	5.3	325	256.46	11 400	1.8	27	**2KJ3206 - ■ BD11 - ■ ■ Q1**	
	5.8	295	233.14	11 400	2.0	27	**2KJ3206 - ■ BD11 - ■ ■ P1**	
	D.59-LA71MG6							
	3.1	550	272.99	6 310	0.82	23	**2KJ3205 - ■ CD11 - ■ ■ R1**	**P01**
	3.5	485	239.70	7 470	0.93	23	**2KJ3205 - ■ CD11 - ■ ■ Q1**	**P01**
	3.9	440	217.91	7 680	1.0	23	**2KJ3205 - ■ CD11 - ■ ■ P1**	**P01**
	D.59-LA63MF4							
	4.4	390	307.02	7 760	1.2	22	**2KJ3205 - ■ BD11 - ■ ■ S1**	
	4.9	345	272.99	7 830	1.3	22	**2KJ3205 - ■ BD11 - ■ ■ R1**	
	5.6	305	239.70	7 900	1.5	22	**2KJ3205 - ■ BD11 - ■ ■ Q1**	
	6.2	275	217.91	7 950	1.6	22	**2KJ3205 - ■ BD11 - ■ ■ P1**	
	7.2	235	186.43	8 010	1.9	22	**2KJ3205 - ■ BD11 - ■ ■ N1**	
	8.0	215	169.48	8 040	2.1	22	**2KJ3205 - ■ BD11 - ■ ■ M1**	
	D.49-LA63MF4							
	4.8	355	280.89	4 890	0.89	20	**2KJ3204 - ■ BD11 - ■ ■ S1**	
	5.4	315	249.76	5 910	1.0	20	**2KJ3204 - ■ BD11 - ■ ■ R1**	
	6.2	275	219.30	5 990	1.1	20	**2KJ3204 - ■ BD11 - ■ ■ Q1**	
	6.8	250	199.36	6 040	1.3	20	**2KJ3204 - ■ BD11 - ■ ■ P1**	
	7.9	215	170.57	6 110	1.5	20	**2KJ3204 - ■ BD11 - ■ ■ N1**	
	8.7	197	155.06	6 150	1.6	20	**2KJ3204 - ■ BD11 - ■ ■ M1**	
	9.8	175	137.06	6 200	1.8	20	**2KJ3204 - ■ BD11 - ■ ■ L1**	
	11	159	124.60	6 230	2	20	**2KJ3204 - ■ BD11 - ■ ■ K1**	
	D.39-LA63MF4							
	7.5	230	181.07	3 610	0.87	10	**2KJ3203 - ■ BD11 - ■ ■ P1**	
	8.2	210	164.61	4 120	0.95	10	**2KJ3203 - ■ BD11 - ■ ■ N1**	
	9.6	180	141.17	4 870	1.1	10	**2KJ3203 - ■ BD11 - ■ ■ M1**	
	11	163	128.34	5 290	1.2	10	**2KJ3203 - ■ BD11 - ■ ■ L1**	
	12	143	112.53	5 790	1.4	10	**2KJ3203 - ■ BD11 - ■ ■ K1**	
	13	128	100.44	5 800	1.6	10	**2KJ3203 - ■ BD11 - ■ ■ J1**	
	15	114	89.51	5 800	1.8	10	**2KJ3203 - ■ BD11 - ■ ■ H1**	
	16	105	82.63	5 800	1.9	10	**2KJ3203 - ■ BD11 - ■ ■ G1**	
	19	92	72.34	5 800	2.2	10	**2KJ3203 - ■ BD11 - ■ ■ F1**	
	D.29-LA63MF4							
	10	165	129.68	3 040	0.85	8	**2KJ3202 - ■ BD11 - ■ ■ L1**	
	11	150	117.89	3 440	0.93	8	**2KJ3202 - ■ BD11 - ■ ■ K1**	
	13	131	102.79	3 950	1.1	8	**2KJ3202 - ■ BD11 - ■ ■ J1**	
	15	117	92.01	4 060	1.2	8	**2KJ3202 - ■ BD11 - ■ ■ H1**	
	17	104	81.71	4 060	1.3	8	**2KJ3202 - ■ BD11 - ■ ■ G1**	
	18	96	75.42	4 060	1.5	8	**2KJ3202 - ■ BD11 - ■ ■ F1**	
	21	83	65.52	4 060	1.7	8	**2KJ3202 - ■ BD11 - ■ ■ E1**	
	24	72	56.93	4 060	1.9	8	**2KJ3202 - ■ BD11 - ■ ■ D1**	
	26	65	51.40	4 060	2.1	8	**2KJ3202 - ■ BD11 - ■ ■ C1**	
	28	62	48.37	4 060	2.3	8	**2KJ3202 - ■ BD11 - ■ ■ B1**	
	Z.29-LA63MF4							
	33	53	41.40	4 060	2.7	8	**2KJ3102 - ■ BD11 - ■ ■ A2**	
	37	47	36.72	4 060	3.0	8	**2KJ3102 - ■ BD11 - ■ ■ X1**	
	42	41	31.86	4 060	3.5	8	**2KJ3102 - ■ BD11 - ■ ■ W1**	

Article No. supplement		
Shaft design	**1 or 9**	➞ page 10/43
Frequency and voltage	**2 or 9**	➞ page 11/2
Gearbox mounting type	**A, B, F or H**	➞ page 10/37

© Siemens AG 2017

3

Selection and ordering data (continued)

P_{rated}	n_2	T_2	i	F_{R2}	f_B	m	Article No.	Order code
kW	rpm	Nm	-	N	-	kg	(Article No. supplement ➞ below)	No. of poles
0.18	**Z.29-LA63MF4**							
	47	37	28.96	4 060	3.8	8	**2KJ3102 - ■ BD11 - ■ ■ V1**	
	54	32	24.84	4 060	4.4	8	**2KJ3102 - ■ BD11 - ■ ■ U1**	
	60	29	22.58	3 980	4.9	8	**2KJ3102 - ■ BD11 - ■ ■ T1**	
	68	25	19.80	3 830	5.6	8	**2KJ3102 - ■ BD11 - ■ ■ S1**	
	76	22	17.67	3 700	6.2	8	**2KJ3102 - ■ BD11 - ■ ■ R1**	
	86	20	15.75	3 560	7.0	8	**2KJ3102 - ■ BD11 - ■ ■ Q1**	
	93	18	14.54	3 480	6.5	8	**2KJ3102 - ■ BD11 - ■ ■ P1**	
	106	16	12.73	3 330	8.6	8	**2KJ3102 - ■ BD11 - ■ ■ N1**	
	121	14	11.16	3 200	9.9	8	**2KJ3102 - ■ BD11 - ■ ■ M1**	
	133	13	10.12	3 100	11	8	**2KJ3102 - ■ BD11 - ■ ■ L1**	
	142	12	9.53	3 040	12	8	**2KJ3102 - ■ BD11 - ■ ■ K1**	
	161	11	8.40	2 920	13	8	**2KJ3102 - ■ BD11 - ■ ■ J1**	
	185	9	7.29	2 790	14	8	**2KJ3102 - ■ BD11 - ■ ■ H1**	
	195	9	6.92	2 730	8.5	8	**2KJ3102 - ■ BD11 - ■ ■ G1**	
	223	8	6.06	2 620	13	8	**2KJ3102 - ■ BD11 - ■ ■ F1**	
	254	7	5.31	2 510	14	8	**2KJ3102 - ■ BD11 - ■ ■ E1**	
	280	6	4.82	2 430	14	8	**2KJ3102 - ■ BD11 - ■ ■ D1**	
	297	6	4.54	2 390	14	8	**2KJ3102 - ■ BD11 - ■ ■ C1**	
	338	5	4.00	2 290	15	8	**2KJ3102 - ■ BD11 - ■ ■ B1**	
	Z.29-LA63ME2							
	160	11	17.67	2 930	13	8	**2KJ3102 - ■ BC11 - ■ ■ R1**	**P00**
	179	10	15.75	2 820	15	8	**2KJ3102 - ■ BC11 - ■ ■ Q1**	**P00**
	194	9	14.54	2 750	14	8	**2KJ3102 - ■ BC11 - ■ ■ P1**	**P00**
	D.19-LA63MF4							
	15	111	87.21	1 430	0.90	7	**2KJ3201 - ■ BD11 - ■ ■ J1**	
	17	99	78.07	1 670	1.0	7	**2KJ3201 - ■ BD11 - ■ ■ H1**	
	19	88	69.32	1 900	1.1	7	**2KJ3201 - ■ BD11 - ■ ■ G1**	
	21	82	63.99	2 020	1.2	7	**2KJ3201 - ■ BD11 - ■ ■ F1**	
	24	71	55.59	2 250	1.4	7	**2KJ3201 - ■ BD11 - ■ ■ E1**	
	28	62	48.30	2 320	1.6	7	**2KJ3201 - ■ BD11 - ■ ■ D1**	
	31	56	43.61	2 350	1.8	7	**2KJ3201 - ■ BD11 - ■ ■ C1**	
	33	52	41.04	2 370	1.9	7	**2KJ3201 - ■ BD11 - ■ ■ B1**	
	Z.19-LA63MF4							
	39	44	34.97	2 410	2.2	7	**2KJ3101 - ■ BD11 - ■ ■ W1**	
	44	39	30.97	2 440	2.5	7	**2KJ3101 - ■ BD11 - ■ ■ V1**	
	50	34	26.91	2 460	2.9	7	**2KJ3101 - ■ BD11 - ■ ■ U1**	
	55	31	24.46	2 480	3.2	7	**2KJ3101 - ■ BD11 - ■ ■ T1**	
	65	26	20.82	2 500	3.8	7	**2KJ3101 - ■ BD11 - ■ ■ S1**	
	71	24	18.92	2 480	4.2	7	**2KJ3101 - ■ BD11 - ■ ■ R1**	
	82	21	16.50	2 380	4.7	7	**2KJ3101 - ■ BD11 - ■ ■ Q1**	
	91	19	14.77	2 300	5.1	7	**2KJ3101 - ■ BD11 - ■ ■ P1**	
	103	17	13.12	2 220	5.4	7	**2KJ3101 - ■ BD11 - ■ ■ N1**	
	111	15	12.11	2 170	5.7	7	**2KJ3101 - ■ BD11 - ■ ■ M1**	
	128	13	10.52	2 080	6.2	7	**2KJ3101 - ■ BD11 - ■ ■ L1**	
	148	12	9.14	1 990	6.7	7	**2KJ3101 - ■ BD11 - ■ ■ K1**	
	164	10	8.25	1 930	7.0	7	**2KJ3101 - ■ BD11 - ■ ■ J1**	
	174	10	7.76	1 890	7.4	7	**2KJ3101 - ■ BD11 - ■ ■ H1**	
	199	9	6.77	1 810	7.9	7	**2KJ3101 - ■ BD11 - ■ ■ G1**	

Article No. supplement		
Shaft design	**1 or 9**	➞ page 10/43
Frequency and voltage	**2 or 9**	➞ page 11/2
Gearbox mounting type	**A, B, F or H**	➞ page 10/37

© Siemens AG 2017

Selection and ordering data (continued)

P_{rated} kW	n_2 rpm	T_2 Nm	i -	F_{R2} N	f_B -	m kg	Article No. (Article No. supplement ➞ below)	Order code No. of poles
0.18	**Z.19-LA63MF4**							
	216	8	6.25	1 740	7.0	7	**2KJ3101 - ■ BD11 - ■ ■ F1**	
	249	7	5.43	1 670	7.7	7	**2KJ3101 - ■ BD11 - ■ ■ E1**	
	287	6	4.71	1 600	8.2	7	**2KJ3101 - ■ BD11 - ■ ■ D1**	
	317	5	4.26	1 550	8.7	7	**2KJ3101 - ■ BD11 - ■ ■ C1**	
	337	5	4.01	1 520	9.0	7	**2KJ3101 - ■ BD11 - ■ ■ B1**	
	Z.19-LA63ME2							
	171	10	16.50	1 900	9.8	6	**2KJ3101 - ■ BC11 - ■ ■ Q1**	**P00**
	191	9	14.77	1 840	11	6	**2KJ3101 - ■ BC11 - ■ ■ P1**	**P00**
	215	8	13.12	1 770	11	6	**2KJ3101 - ■ BC11 - ■ ■ N1**	**P00**
	233	7	12.11	1 730	12	6	**2KJ3101 - ■ BC11 - ■ ■ M1**	**P00**
	268	6	10.52	1 650	13	6	**2KJ3101 - ■ BC11 - ■ ■ L1**	**P00**
	309	6	9.14	1 580	14	6	**2KJ3101 - ■ BC11 - ■ ■ K1**	**P00**
	342	5	8.25	1 530	15	6	**2KJ3101 - ■ BC11 - ■ ■ J1**	**P00**
	363	5	7.76	1 500	15	6	**2KJ3101 - ■ BC11 - ■ ■ H1**	**P00**
	451	4	6.25	1 390	15	6	**2KJ3101 - ■ BC11 - ■ ■ F1**	**P00**
	E.39-LA63MF4							
	146	12	9.22	3 000	2.6	10	**2KJ3001 - ■ BD11 - ■ ■ S1**	
	165	10	8.20	3 000	3.3	10	**2KJ3001 - ■ BD11 - ■ ■ R1**	
0.25	**D.79-LA71MH6**							
	2.6	915	330.23	12 800	0.92	39	**2KJ3207 - ■ CE11 - ■ ■ S1**	**P01**
	2.9	830	300.21	13 400	1.0	39	**2KJ3207 - ■ CE11 - ■ ■ R1**	**P01**
	3.4	705	255.33	13 600	1.2	39	**2KJ3207 - ■ CE11 - ■ ■ Q1**	**P01**
	3.7	640	232.12	13 600	1.3	39	**2KJ3207 - ■ CE11 - ■ ■ P1**	**P01**
	D.79-LA71MG4							
	4.1	580	330.23	13 700	1.4	38	**2KJ3207 - ■ CD11 - ■ ■ S1**	
	4.5	530	300.21	13 800	1.6	38	**2KJ3207 - ■ CD11 - ■ ■ R1**	
	5.3	450	255.33	13 900	1.9	38	**2KJ3207 - ■ CD11 - ■ ■ Q1**	
	5.8	410	232.12	13 900	2.0	38	**2KJ3207 - ■ CD11 - ■ ■ P1**	
	D.69-LA71MH6							
	3.4	710	256.46	10 700	0.84	29	**2KJ3206 - ■ CE11 - ■ ■ Q1**	**P01**
	3.7	645	233.14	10 900	0.93	29	**2KJ3206 - ■ CE11 - ■ ■ P1**	**P01**
	D.69-LA71MG4							
	4.1	580	328.49	11 000	1.0	28	**2KJ3206 - ■ CD11 - ■ ■ S1**	
	4.6	515	292.08	11 100	1.2	28	**2KJ3206 - ■ CD11 - ■ ■ R1**	
	5.3	450	256.46	11 200	1.3	28	**2KJ3206 - ■ CD11 - ■ ■ Q1**	
	5.8	410	233.14	11 300	1.5	28	**2KJ3206 - ■ CD11 - ■ ■ P1**	
	6.8	350	199.47	11 300	1.7	28	**2KJ3206 - ■ CD11 - ■ ■ N1**	
	7.4	320	181.33	11 400	1.9	28	**2KJ3206 - ■ CD11 - ■ ■ M1**	
	8.4	280	160.29	11 500	2.1	28	**2KJ3206 - ■ CD11 - ■ ■ L1**	
	D.59-LA71MG4							
	4.4	540	307.02	6 490	0.83	23	**2KJ3205 - ■ CD11 - ■ ■ S1**	
	4.9	480	272.99	7 560	0.93	23	**2KJ3205 - ■ CD11 - ■ ■ R1**	
	5.6	420	239.70	7 710	1.1	23	**2KJ3205 - ■ CD11 - ■ ■ Q1**	
	6.2	385	217.91	7 770	1.2	23	**2KJ3205 - ■ CD11 - ■ ■ P1**	
	7.2	330	186.43	7 860	1.4	23	**2KJ3205 - ■ CD11 - ■ ■ N1**	
	8.0	300	169.48	7 910	1.5	23	**2KJ3205 - ■ CD11 - ■ ■ M1**	
	9.0	265	149.81	7 960	1.7	23	**2KJ3205 - ■ CD11 - ■ ■ L1**	
	9.9	240	136.19	8 000	1.9	23	**2KJ3205 - ■ CD11 - ■ ■ K1**	
	11	210	119.30	8 050	2.1	23	**2KJ3205 - ■ CD11 - ■ ■ J1**	

Article No. supplement		
Shaft design	**1 or 9**	➞ page 10/43
Frequency and voltage	**2 or 9**	➞ page 11/2
Gearbox mounting type	**A, B, F or H**	➞ page 10/37

© Siemens AG 2017

3

Selection and ordering data (continued)

P_{rated}	n_2	T_2	i	F_{R2}	f_B	m	Article No.	Order code
kW	rpm	Nm	-	N	-	kg	(Article No. supplement ➞ below)	No. of poles
0.25	**D.49-LA71MG4**							
	6.2	385	219.30	4 130	0.83	21	**2KJ3204 - ■ CD11 - ■ ■ Q1**	
	6.8	350	199.36	5 020	0.91	21	**2KJ3204 - ■ CD11 - ■ ■ P1**	
	7.9	300	170.57	5 940	1.1	21	**2KJ3204 - ■ CD11 - ■ ■ N1**	
	8.7	270	155.06	6 000	1.2	21	**2KJ3204 - ■ CD11 - ■ ■ M1**	
	9.8	240	137.06	6 060	1.3	21	**2KJ3204 - ■ CD11 - ■ ■ L1**	
	11	220	124.60	6 100	1.5	21	**2KJ3204 - ■ CD11 - ■ ■ K1**	
	12	193	109.14	6 160	1.7	21	**2KJ3204 - ■ CD11 - ■ ■ J1**	
	13	178	100.75	6 190	1.8	21	**2KJ3204 - ■ CD11 - ■ ■ H1**	
	15	158	89.20	6 230	2.0	21	**2KJ3204 - ■ CD11 - ■ ■ G1**	
	D.39-LA71MG4							
	9.6	250	141.17	3 110	0.80	11	**2KJ3203 - ■ CD11 - ■ ■ M1**	
	11	225	128.34	3 740	0.88	11	**2KJ3203 - ■ CD11 - ■ ■ L1**	
	12	199	112.53	4 390	1.0	11	**2KJ3203 - ■ CD11 - ■ ■ K1**	
	13	178	100.44	4 920	1.1	11	**2KJ3203 - ■ CD11 - ■ ■ J1**	
	15	158	89.51	5 410	1.3	11	**2KJ3203 - ■ CD11 - ■ ■ H1**	
	16	146	82.63	5 720	1.4	11	**2KJ3203 - ■ CD11 - ■ ■ G1**	
	19	128	72.34	5 800	1.6	11	**2KJ3203 - ■ CD11 - ■ ■ F1**	
	21	112	63.43	5 800	1.8	11	**2KJ3203 - ■ CD11 - ■ ■ E1**	
	Z.39-LA71MG4							
	24	99	55.95	5 800	2.0	11	**2KJ3103 - ■ CD11 - ■ ■ A2**	
	27	88	49.75	5 800	2.3	11	**2KJ3103 - ■ CD11 - ■ ■ X1**	
	D.29-LA71MG4							
	15	163	92.01	3 100	0.86	9	**2KJ3202 - ■ CD11 - ■ ■ H1**	
	17	145	81.71	3 570	0.97	9	**2KJ3202 - ■ CD11 - ■ ■ G1**	
	18	133	75.42	3 890	1.0	9	**2KJ3202 - ■ CD11 - ■ ■ F1**	
	21	116	65.52	4 060	1.2	9	**2KJ3202 - ■ CD11 - ■ ■ E1**	
	24	101	56.93	4 060	1.4	9	**2KJ3202 - ■ CD11 - ■ ■ D1**	
	26	91	51.40	4 060	1.5	9	**2KJ3202 - ■ CD11 - ■ ■ C1**	
	28	86	48.37	4 060	1.6	9	**2KJ3202 - ■ CD11 - ■ ■ B1**	
	Z.29-LA71MG4							
	33	73	41.40	4 060	1.9	9	**2KJ3102 - ■ CD11 - ■ ■ A2**	
	37	65	36.72	4 060	2.2	9	**2KJ3102 - ■ CD11 - ■ ■ X1**	
	42	56	31.86	4 060	2.5	9	**2KJ3102 - ■ CD11 - ■ ■ W1**	
	47	51	28.96	4 060	2.7	9	**2KJ3102 - ■ CD11 - ■ ■ V1**	
	54	44	24.84	4 030	3.2	9	**2KJ3102 - ■ CD11 - ■ ■ U1**	
	60	40	22.58	3 920	3.5	9	**2KJ3102 - ■ CD11 - ■ ■ T1**	
	68	35	19.80	3 770	4.0	9	**2KJ3102 - ■ CD11 - ■ ■ S1**	
	76	31	17.67	3 650	4.5	9	**2KJ3102 - ■ CD11 - ■ ■ R1**	
	86	28	15.75	3 520	5.0	9	**2KJ3102 - ■ CD11 - ■ ■ Q1**	
	93	26	14.54	3 430	4.7	9	**2KJ3102 - ■ CD11 - ■ ■ P1**	
	106	22	12.73	3 300	6.2	9	**2KJ3102 - ■ CD11 - ■ ■ N1**	
	121	20	11.16	3 160	7.1	9	**2KJ3102 - ■ CD11 - ■ ■ M1**	
	133	18	10.12	3 070	7.8	9	**2KJ3102 - ■ CD11 - ■ ■ L1**	
	142	17	9.53	3 010	8.3	9	**2KJ3102 - ■ CD11 - ■ ■ K1**	
	161	15	8.40	2 900	9.3	9	**2KJ3102 - ■ CD11 - ■ ■ J1**	
	185	13	7.29	2 770	10	9	**2KJ3102 - ■ CD11 - ■ ■ H1**	
	195	12	6.92	2 710	6.1	9	**2KJ3102 - ■ CD11 - ■ ■ G1**	
	223	11	6.06	2 600	9.3	9	**2KJ3102 - ■ CD11 - ■ ■ F1**	

Article No. supplement		
Shaft design	**1 or 9**	➞ page 10/43
Frequency and voltage	**2 or 9**	➞ page 11/2
Gearbox mounting type	**A, B, F or H**	➞ page 10/37

© Siemens AG 2017

Selection and ordering data (continued)

P_{rated}	n_2	T_2	i	F_{R2}	f_B	m	Article No.	Order code
kW	rpm	Nm	-	N	-	kg	(Article No. supplement ➞ below)	No. of poles
0.25	**Z.29-LA71MG4**							
	254	9	5.31	2 490	9.7	9	**2KJ3102 - ■ CD11 - ■ ■ E1**	
	280	9	4.82	2 420	10	9	**2KJ3102 - ■ CD11 - ■ ■ D1**	
	297	8	4.54	2 370	10	9	**2KJ3102 - ■ CD11 - ■ ■ C1**	
	338	7	4.00	2 280	11	9	**2KJ3102 - ■ CD11 - ■ ■ B1**	
	389	6	3.47	2 180	11	9	**2KJ3102 - ■ CD11 - ■ ■ A1**	
	Z.29-LA63MF2							
	160	15	17.67	2 900	9.4	8	**2KJ3102 - ■ BD11 - ■ ■ R1**	**P00**
	180	13	15.75	2 800	10	8	**2KJ3102 - ■ BD11 - ■ ■ Q1**	**P00**
	195	12	14.54	2 730	9.8	8	**2KJ3102 - ■ BD11 - ■ ■ P1**	**P00**
	222	11	12.73	2 610	13	8	**2KJ3102 - ■ BD11 - ■ ■ N1**	**P00**
	254	9	11.16	2 510	15	8	**2KJ3102 - ■ BD11 - ■ ■ M1**	**P00**
	409	6	6.92	2 140	13	8	**2KJ3102 - ■ BD11 - ■ ■ G1**	**P00**
	D.19-LA71MG4							
	19	123	69.32	1 180	0.82	8	**2KJ3201 - ■ CD11 - ■ ■ G1**	
	21	113	63.99	1 390	0.88	8	**2KJ3201 - ■ CD11 - ■ ■ F1**	
	24	98	55.59	1 690	1.0	8	**2KJ3201 - ■ CD11 - ■ ■ E1**	
	28	85	48.30	1 960	1.2	8	**2KJ3201 - ■ CD11 - ■ ■ D1**	
	31	77	43.61	2 120	1.3	8	**2KJ3201 - ■ CD11 - ■ ■ C1**	
	33	73	41.04	2 210	1.4	8	**2KJ3201 - ■ CD11 - ■ ■ B1**	
	Z.19-LA71MG4							
	39	62	34.97	2 320	1.6	8	**2KJ3101 - ■ CD11 - ■ ■ W1**	
	44	55	30.97	2 360	1.8	8	**2KJ3101 - ■ CD11 - ■ ■ V1**	
	50	48	26.91	2 390	2.1	8	**2KJ3101 - ■ CD11 - ■ ■ U1**	
	55	43	24.46	2 420	2.3	8	**2KJ3101 - ■ CD11 - ■ ■ T1**	
	65	37	20.82	2 450	2.7	8	**2KJ3101 - ■ CD11 - ■ ■ S1**	
	71	34	18.92	2 410	3.0	8	**2KJ3101 - ■ CD11 - ■ ■ R1**	
	82	29	16.50	2 320	3.4	8	**2KJ3101 - ■ CD11 - ■ ■ Q1**	
	91	26	14.77	2 250	3.6	8	**2KJ3101 - ■ CD11 - ■ ■ P1**	
	103	23	13.12	2 180	3.9	8	**2KJ3101 - ■ CD11 - ■ ■ N1**	
	111	21	12.11	2 130	4.1	8	**2KJ3101 - ■ CD11 - ■ ■ M1**	
	128	19	10.52	2 040	4.5	8	**2KJ3101 - ■ CD11 - ■ ■ L1**	
	148	16	9.14	1 960	4.8	8	**2KJ3101 - ■ CD11 - ■ ■ K1**	
	164	15	8.25	1 900	5.1	8	**2KJ3101 - ■ CD11 - ■ ■ J1**	
	174	14	7.76	1 870	5.3	8	**2KJ3101 - ■ CD11 - ■ ■ H1**	
	199	12	6.77	1 790	5.7	8	**2KJ3101 - ■ CD11 - ■ ■ G1**	
	216	11	6.25	1 710	5.1	8	**2KJ3101 - ■ CD11 - ■ ■ F1**	
	249	10	5.43	1 640	5.5	8	**2KJ3101 - ■ CD11 - ■ ■ E1**	
	287	8	4.71	1 570	5.9	8	**2KJ3101 - ■ CD11 - ■ ■ D1**	
	317	8	4.26	1 530	6.2	8	**2KJ3101 - ■ CD11 - ■ ■ C1**	
	337	7	4.01	1 500	6.5	8	**2KJ3101 - ■ CD11 - ■ ■ B1**	
	Z.19-LA63MF2							
	150	16	18.92	1 950	6.3	7	**2KJ3101 - ■ BD11 - ■ ■ R1**	**P00**
	172	14	16.50	1 870	7.1	7	**2KJ3101 - ■ BD11 - ■ ■ Q1**	**P00**
	192	12	14.77	1 820	7.6	7	**2KJ3101 - ■ BD11 - ■ ■ P1**	**P00**
	216	11	13.12	1 750	8.2	7	**2KJ3101 - ■ BD11 - ■ ■ N1**	**P00**
	234	10	12.11	1 710	8.6	7	**2KJ3101 - ■ BD11 - ■ ■ M1**	**P00**
	269	9	10.52	1 630	9.4	7	**2KJ3101 - ■ BD11 - ■ ■ L1**	**P00**
	310	8	9.14	1 560	10	7	**2KJ3101 - ■ BD11 - ■ ■ K1**	**P00**

Article No. supplement		
Shaft design	**1 or 9**	➞ page 10/43
Frequency and voltage	**2 or 9**	➞ page 11/2
Gearbox mounting type	**A, B, F or H**	➞ page 10/37

© Siemens AG 2017

3

Selection and ordering data (continued)

P_{rated} kW	n_2 rpm	T_2 Nm	i -	F_{R2} N	f_B -	m kg	Article No. (Article No. supplement ➞ below)	Order code No. of poles
0.25	**Z.19-LA63MF2**							
	343	7	8.25	1 520	11	7	**2KJ3101 - ■ BD11 - ■ ■ J1**	**P00**
	365	7	7.76	1 490	11	7	**2KJ3101 - ■ BD11 - ■ ■ H1**	**P00**
	418	6	6.77	1 420	12	7	**2KJ3101 - ■ BD11 - ■ ■ G1**	**P00**
	453	5	6.25	1 370	11	7	**2KJ3101 - ■ BD11 - ■ ■ F1**	**P00**
	521	5	5.43	1 310	12	7	**2KJ3101 - ■ BD11 - ■ ■ E1**	**P00**
	601	4	4.71	1 250	12	7	**2KJ3101 - ■ BD11 - ■ ■ D1**	**P00**
	664	4	4.26	1 220	13	7	**2KJ3101 - ■ BD11 - ■ ■ C1**	**P00**
	706	3	4.01	1 190	14	7	**2KJ3101 - ■ BD11 - ■ ■ B1**	**P00**
	E.39-LA71MG4							
	146	16	9.22	3 000	1.8	11	**2KJ3001 - ■ CD11 - ■ ■ S1**	
	165	14	8.20	3 000	2.3	11	**2KJ3001 - ■ CD11 - ■ ■ R1**	
	188	13	7.20	3 000	3.1	11	**2KJ3001 - ■ CD11 - ■ ■ Q1**	
	206	12	6.55	3 000	3.5	11	**2KJ3001 - ■ CD11 - ■ ■ P1**	
	241	10	5.60	3 000	4.0	11	**2KJ3001 - ■ CD11 - ■ ■ N1**	
	265	9	5.09	3 000	4.4	11	**2KJ3001 - ■ CD11 - ■ ■ M1**	
0.37	**D.79-LA71MH4**							
	4.1	850	330.23	13 400	0.99	39	**2KJ3207 - ■ CE11 - ■ ■ S1**	
	4.6	770	300.21	13 500	1.1	39	**2KJ3207 - ■ CE11 - ■ ■ R1**	
	5.4	655	255.33	13 600	1.3	39	**2KJ3207 - ■ CE11 - ■ ■ Q1**	
	5.9	595	232.12	13 700	1.4	39	**2KJ3207 - ■ CE11 - ■ ■ P1**	
	6.6	530	207.10	13 800	1.6	39	**2KJ3207 - ■ CE11 - ■ ■ N1**	
	7.4	475	185.70	13 900	1.8	39	**2KJ3207 - ■ CE11 - ■ ■ M1**	
	8.2	430	167.39	13 900	1.9	39	**2KJ3207 - ■ CE11 - ■ ■ L1**	
	8.9	395	154.51	14 000	2.1	39	**2KJ3207 - ■ CE11 - ■ ■ K1**	
	D.69-LA71MH4							
	4.7	750	292.08	10 600	0.80	29	**2KJ3206 - ■ CE11 - ■ ■ R1**	
	5.3	660	256.46	10 800	0.91	29	**2KJ3206 - ■ CE11 - ■ ■ Q1**	
	5.9	600	233.14	11 000	1.0	29	**2KJ3206 - ■ CE11 - ■ ■ P1**	
	6.9	510	199.47	11 100	1.2	29	**2KJ3206 - ■ CE11 - ■ ■ N1**	
	7.6	465	181.33	11 200	1.3	29	**2KJ3206 - ■ CE11 - ■ ■ M1**	
	8.5	410	160.29	11 300	1.5	29	**2KJ3206 - ■ CE11 - ■ ■ L1**	
	9.4	375	145.71	11 300	1.6	29	**2KJ3206 - ■ CE11 - ■ ■ K1**	
	11	325	127.63	11 400	1.8	29	**2KJ3206 - ■ CE11 - ■ ■ J1**	
	12	300	117.82	11 400	2.0	29	**2KJ3206 - ■ CE11 - ■ ■ H1**	
	13	265	104.31	11 500	2.2	29	**2KJ3206 - ■ CE11 - ■ ■ G1**	
	D.59-LA71MH4							
	6.3	560	217.91	6 130	0.80	25	**2KJ3205 - ■ CE11 - ■ ■ P1**	
	7.3	480	186.43	7 560	0.94	25	**2KJ3205 - ■ CE11 - ■ ■ N1**	
	8.1	435	169.48	7 690	1.0	25	**2KJ3205 - ■ CE11 - ■ ■ M1**	
	9.1	385	149.81	7 770	1.2	25	**2KJ3205 - ■ CE11 - ■ ■ L1**	
	10	350	136.19	7 820	1.3	25	**2KJ3205 - ■ CE11 - ■ ■ K1**	
	11	305	119.30	7 900	1.5	25	**2KJ3205 - ■ CE11 - ■ ■ J1**	
	12	280	110.12	7 940	1.6	25	**2KJ3205 - ■ CE11 - ■ ■ H1**	
	14	250	97.50	7 990	1.8	25	**2KJ3205 - ■ CE11 - ■ ■ G1**	
	17	205	81.15	8 060	2.2	25	**2KJ3205 - ■ CE11 - ■ ■ F1**	
	18	197	76.38	8 070	2.3	25	**2KJ3205 - ■ CE11 - ■ ■ E1**	
	D.49-LA71MH4							
	8.8	400	155.06	3 750	0.80	22	**2KJ3204 - ■ CE11 - ■ ■ M1**	
	10	350	137.06	5 020	0.91	22	**2KJ3204 - ■ CE11 - ■ ■ L1**	

Article No. supplement		
Shaft design	**1 or 9**	➞ page 10/43
Frequency and voltage	**2 or 9**	➞ page 11/2
Gearbox mounting type	**A, B, F or H**	➞ page 10/37

© Siemens AG 2017

Selection and ordering data (continued)

P_{rated}	n_2	T_2	i	F_{R2}	f_B	m	Article No.	Order code
kW	rpm	Nm	-	N	-	kg	(Article No. supplement ➞ below)	No. of poles
0.37	**D.49-LA71MH4**							
	11	320	124.60	5 780	1.0	22	**2KJ3204 - ■ CE11 - ■ ■ K1**	
	13	280	109.14	5 980	1.1	22	**2KJ3204 - ■ CE11 - ■ ■ J1**	
	14	260	100.75	6 020	1.2	22	**2KJ3204 - ■ CE11 - ■ ■ H1**	
	15	230	89.20	6 080	1.4	22	**2KJ3204 - ■ CE11 - ■ ■ G1**	
	18	191	74.24	6 160	1.7	22	**2KJ3204 - ■ CE11 - ■ ■ F1**	
	20	180	69.88	6 190	1.8	22	**2KJ3204 - ■ CE11 - ■ ■ E1**	
	22	161	62.61	6 220	2.0	22	**2KJ3204 - ■ CE11 - ■ ■ D1**	
	Z.49-LA71MH4							
	26	134	52.14	6 280	2.4	22	**2KJ3104 - ■ CE11 - ■ ■ B2**	
	D.39-LA71MH4							
	15	230	89.51	3 610	0.87	13	**2KJ3203 - ■ CE11 - ■ ■ H1**	
	17	210	82.63	4 120	0.94	13	**2KJ3203 - ■ CE11 - ■ ■ G1**	
	19	187	72.34	4 690	1.1	13	**2KJ3203 - ■ CE11 - ■ ■ F1**	
	22	164	63.43	5 270	1.2	13	**2KJ3203 - ■ CE11 - ■ ■ E1**	
	Z.39-LA71MH4							
	24	144	55.95	5 770	1.4	12	**2KJ3103 - ■ CE11 - ■ ■ A2**	
	28	128	49.75	5 800	1.6	12	**2KJ3103 - ■ CE11 - ■ ■ X1**	
	31	113	43.68	5 800	1.8	12	**2KJ3103 - ■ CE11 - ■ ■ W1**	
	35	102	39.71	5 800	2.0	12	**2KJ3103 - ■ CE11 - ■ ■ V1**	
	40	88	33.97	5 800	2.3	12	**2KJ3103 - ■ CE11 - ■ ■ U1**	
	44	80	30.88	5 800	2.5	12	**2KJ3103 - ■ CE11 - ■ ■ T1**	
	50	70	27.30	5 800	2.8	12	**2KJ3103 - ■ CE11 - ■ ■ S1**	
	D.29-LA71MH4							
	21	169	65.52	2 940	0.83	11	**2KJ3202 - ■ CE11 - ■ ■ E1**	
	24	147	56.93	3 520	0.95	11	**2KJ3202 - ■ CE11 - ■ ■ D1**	
	27	133	51.40	3 890	1.1	11	**2KJ3202 - ■ CE11 - ■ ■ C1**	
	28	125	48.37	4 060	1.1	11	**2KJ3202 - ■ CE11 - ■ ■ B1**	
	Z.29-LA71MH4							
	33	107	41.40	4 060	1.3	11	**2KJ3102 - ■ CE11 - ■ ■ A2**	
	37	95	36.72	4 060	1.5	11	**2KJ3102 - ■ CE11 - ■ ■ X1**	
	43	82	31.86	4 060	1.7	11	**2KJ3102 - ■ CE11 - ■ ■ W1**	
	47	75	28.96	4 060	1.9	11	**2KJ3102 - ■ CE11 - ■ ■ V1**	
	55	64	24.84	3 900	2.2	11	**2KJ3102 - ■ CE11 - ■ ■ U1**	
	61	58	22.58	3 800	2.4	11	**2KJ3102 - ■ CE11 - ■ ■ T1**	
	69	51	19.80	3 660	2.7	11	**2KJ3102 - ■ CE11 - ■ ■ S1**	
	78	46	17.67	3 540	3.1	11	**2KJ3102 - ■ CE11 - ■ ■ R1**	
	87	41	15.75	3 430	3.4	11	**2KJ3102 - ■ CE11 - ■ ■ Q1**	
	94	38	14.54	3 350	3.2	11	**2KJ3102 - ■ CE11 - ■ ■ P1**	
	108	33	12.73	3 220	4.3	11	**2KJ3102 - ■ CE11 - ■ ■ N1**	
	123	29	11.16	3 100	4.9	11	**2KJ3102 - ■ CE11 - ■ ■ M1**	
	135	26	10.12	3 010	5.4	11	**2KJ3102 - ■ CE11 - ■ ■ L1**	
	144	25	9.53	2 950	5.7	11	**2KJ3102 - ■ CE11 - ■ ■ K1**	
	163	22	8.40	2 840	6.4	11	**2KJ3102 - ■ CE11 - ■ ■ J1**	
	188	19	7.29	2 720	6.9	11	**2KJ3102 - ■ CE11 - ■ ■ H1**	
	198	18	6.92	2 660	4.2	11	**2KJ3102 - ■ CE11 - ■ ■ G1**	
	226	16	6.06	2 550	6.4	11	**2KJ3102 - ■ CE11 - ■ ■ F1**	
	258	14	5.31	2 450	6.6	11	**2KJ3102 - ■ CE11 - ■ ■ E1**	
	284	12	4.82	2 380	6.9	11	**2KJ3102 - ■ CE11 - ■ ■ D1**	
	302	12	4.54	2 330	7.2	11	**2KJ3102 - ■ CE11 - ■ ■ C1**	

Article No. supplement		
Shaft design	**1 or 9**	➞ page 10/43
Frequency and voltage	**2 or 9**	➞ page 11/2
Gearbox mounting type	**A, B, F or H**	➞ page 10/37

© Siemens AG 2017

3

Selection and ordering data (continued)

P_{rated}	n_2	T_2	i	F_{R2}	f_B	m	Article No.	Order code
kW	rpm	Nm	-	N	-	kg	(Article No. supplement ➞ below)	No. of poles
0.37	**Z.29-LA71MH4**							
	342	10	4.00	2 250	7.4	11	**2KJ3102 - ■ CE11 - ■ ■ B1**	
	395	9	3.47	2 150	7.8	11	**2KJ3102 - ■ CE11 - ■ ■ A1**	
	Z.29-LA71MG2							
	155	23	17.67	2 890	6.1	9	**2KJ3102 - ■ CD11 - ■ ■ R1**	**P00**
	174	20	15.75	2 790	6.9	9	**2KJ3102 - ■ CD11 - ■ ■ Q1**	**P00**
	188	19	14.54	2 720	6.4	9	**2KJ3102 - ■ CD11 - ■ ■ P1**	**P00**
	215	16	12.73	2 610	8.5	9	**2KJ3102 - ■ CD11 - ■ ■ N1**	**P00**
	246	14	11.16	2 510	9.7	9	**2KJ3102 - ■ CD11 - ■ ■ M1**	**P00**
	271	13	10.12	2 430	11	9	**2KJ3102 - ■ CD11 - ■ ■ L1**	**P00**
	288	12	9.53	2 390	11	9	**2KJ3102 - ■ CD11 - ■ ■ K1**	**P00**
	326	11	8.40	2 290	13	9	**2KJ3102 - ■ CD11 - ■ ■ J1**	**P00**
	376	9	7.29	2 190	14	9	**2KJ3102 - ■ CD11 - ■ ■ H1**	**P00**
	396	9	6.92	2 140	8.4	9	**2KJ3102 - ■ CD11 - ■ ■ G1**	**P00**
	452	8	6.06	2 060	13	9	**2KJ3102 - ■ CD11 - ■ ■ F1**	**P00**
	516	7	5.31	1 970	13	9	**2KJ3102 - ■ CD11 - ■ ■ E1**	**P00**
	568	6	4.82	1 910	14	9	**2KJ3102 - ■ CD11 - ■ ■ D1**	**P00**
	604	6	4.54	1 870	14	9	**2KJ3102 - ■ CD11 - ■ ■ C1**	**P00**
	685	5	4.00	1 800	15	9	**2KJ3102 - ■ CD11 - ■ ■ B1**	**P00**
	D.19-LA71MH4							
	28	125	48.30	1 140	0.80	9	**2KJ3201 - ■ CE11 - ■ ■ D1**	
	31	112	43.61	1 410	0.89	9	**2KJ3201 - ■ CE11 - ■ ■ C1**	
	33	106	41.04	1 530	0.94	9	**2KJ3201 - ■ CE11 - ■ ■ B1**	
	Z.19-LA71MH4							
	39	90	34.97	1 860	1.1	9	**2KJ3101 - ■ CE11 - ■ ■ W1**	
	44	80	30.97	2 060	1.3	9	**2KJ3101 - ■ CE11 - ■ ■ V1**	
	51	69	26.91	2 290	1.4	9	**2KJ3101 - ■ CE11 - ■ ■ U1**	
	56	63	24.46	2 320	1.6	9	**2KJ3101 - ■ CE11 - ■ ■ T1**	
	66	54	20.82	2 340	1.9	9	**2KJ3101 - ■ CE11 - ■ ■ S1**	
	72	49	18.92	2 290	2.0	9	**2KJ3101 - ■ CE11 - ■ ■ R1**	
	83	43	16.50	2 210	2.3	9	**2KJ3101 - ■ CE11 - ■ ■ Q1**	
	93	38	14.77	2 160	2.5	9	**2KJ3101 - ■ CE11 - ■ ■ P1**	
	104	34	13.12	2 090	2.7	9	**2KJ3101 - ■ CE11 - ■ ■ N1**	
	113	31	12.11	2 050	2.8	9	**2KJ3101 - ■ CE11 - ■ ■ M1**	
	130	27	10.52	1 970	3.1	9	**2KJ3101 - ■ CE11 - ■ ■ L1**	
	150	24	9.14	1 900	3.3	9	**2KJ3101 - ■ CE11 - ■ ■ K1**	
	166	21	8.25	1 850	3.5	9	**2KJ3101 - ■ CE11 - ■ ■ J1**	
	177	20	7.76	1 810	3.6	9	**2KJ3101 - ■ CE11 - ■ ■ H1**	
	202	18	6.77	1 740	3.9	9	**2KJ3101 - ■ CE11 - ■ ■ G1**	
	219	16	6.25	1 650	3.5	9	**2KJ3101 - ■ CE11 - ■ ■ F1**	
	252	14	5.43	1 590	3.8	9	**2KJ3101 - ■ CE11 - ■ ■ E1**	
	291	12	4.71	1 530	4.0	9	**2KJ3101 - ■ CE11 - ■ ■ D1**	
	322	11	4.26	1 480	4.3	9	**2KJ3101 - ■ CE11 - ■ ■ C1**	
	342	10	4.01	1 460	4.4	9	**2KJ3101 - ■ CE11 - ■ ■ B1**	
	Z.19-LA71MG2							
	166	21	16.50	1 850	4.7	8	**2KJ3101 - ■ CD11 - ■ ■ Q1**	**P00**
	186	19	14.77	1 790	5.0	8	**2KJ3101 - ■ CD11 - ■ ■ P1**	**P00**
	209	17	13.12	1 730	5.4	8	**2KJ3101 - ■ CD11 - ■ ■ N1**	**P00**
	226	16	12.11	1 690	5.6	8	**2KJ3101 - ■ CD11 - ■ ■ M1**	**P00**

Article No. supplement		
Shaft design	**1 or 9**	➞ page 10/43
Frequency and voltage	**2 or 9**	➞ page 11/2
Gearbox mounting type	**A, B, F or H**	➞ page 10/37

© Siemens AG 2017

Selection and ordering data (continued)

P_{rated} kW	n_2 rpm	T_2 Nm	i -	F_{R2} N	f_B -	m kg	Article No. (Article No. supplement ➞ below)	Order code No. of poles
0.37	**Z.19-LA71MG2**							
	260	14	10.52	1 620	6.1	8	**2KJ3101 - ■ CD11 - ■ ■ L1**	**P00**
	300	12	9.14	1 550	6.6	8	**2KJ3101 - ■ CD11 - ■ ■ K1**	**P00**
	332	11	8.25	1 500	7.0	8	**2KJ3101 - ■ CD11 - ■ ■ J1**	**P00**
	353	10	7.76	1 480	7.3	8	**2KJ3101 - ■ CD11 - ■ ■ H1**	**P00**
	405	9	6.77	1 420	7.8	8	**2KJ3101 - ■ CD11 - ■ ■ G1**	**P00**
	438	8	6.25	1 360	6.9	8	**2KJ3101 - ■ CD11 - ■ ■ F1**	**P00**
	505	7	5.43	1 300	7.6	8	**2KJ3101 - ■ CD11 - ■ ■ E1**	**P00**
	582	6	4.71	1 250	8.1	8	**2KJ3101 - ■ CD11 - ■ ■ D1**	**P00**
	643	6	4.26	1 210	8.6	8	**2KJ3101 - ■ CD11 - ■ ■ C1**	**P00**
	683	5	4.01	1 190	8.9	8	**2KJ3101 - ■ CD11 - ■ ■ B1**	**P00**
	E.49-LA71MH4							
	141	25	9.70	4 000	3.4	18	**2KJ3002 - ■ CE11 - ■ ■ S1**	
	E.39-LA71MH4							
	149	24	9.22	3 000	1.3	13	**2KJ3001 - ■ CE11 - ■ ■ S1**	
	167	21	8.20	3 000	1.6	13	**2KJ3001 - ■ CE11 - ■ ■ R1**	
	190	19	7.20	3 000	2.2	13	**2KJ3001 - ■ CE11 - ■ ■ Q1**	
	209	17	6.55	3 000	2.4	13	**2KJ3001 - ■ CE11 - ■ ■ P1**	
	245	14	5.60	3 000	2.8	13	**2KJ3001 - ■ CE11 - ■ ■ N1**	
	269	13	5.09	3 000	3.0	13	**2KJ3001 - ■ CE11 - ■ ■ M1**	
	304	12	4.50	3 000	4.1	13	**2KJ3001 - ■ CE11 - ■ ■ L1**	
	335	10	4.09	3 000	4.6	13	**2KJ3001 - ■ CE11 - ■ ■ K1**	
0.55	**D.89-LE80MB4**							
	4.6	1 130	311.60	18 500	1.5	65	**2KJ3208 - ■ DB21 - ■ ■ S1**	
	5.1	1 030	283.28	18 500	1.6	65	**2KJ3208 - ■ DB21 - ■ ■ R1**	
	5.7	925	254.09	18 500	1.8	65	**2KJ3208 - ■ DB21 - ■ ■ Q1**	
	6.3	830	228.45	18 500	2.0	65	**2KJ3208 - ■ DB21 - ■ ■ P1**	
	D.79-LA71ZML4							
	5.4	975	255.33	11 900	0.86	39	**2KJ3207 - ■ CH11 - ■ ■ Q1**	
	5.9	890	232.12	13 200	0.94	39	**2KJ3207 - ■ CH11 - ■ ■ P1**	
	6.6	790	207.10	13 400	1.1	39	**2KJ3207 - ■ CH11 - ■ ■ N1**	
	7.4	710	185.70	13 500	1.2	39	**2KJ3207 - ■ CH11 - ■ ■ M1**	
	8.2	640	167.39	13 600	1.3	39	**2KJ3207 - ■ CH11 - ■ ■ L1**	
	8.9	590	154.51	13 700	1.4	39	**2KJ3207 - ■ CH11 - ■ ■ K1**	
	9.7	540	141.04	13 800	1.6	39	**2KJ3207 - ■ CH11 - ■ ■ J1**	
	12	420	110.14	13 900	2.0	39	**2KJ3207 - ■ CH11 - ■ ■ G1**	
	12	445	117.03	13 900	1.9	39	**2KJ3207 - ■ CH11 - ■ ■ H1**	
	13	395	104.03	14 000	2.1	39	**2KJ3207 - ■ CH11 - ■ ■ F1**	
	D.79-LE80MB4							
	5.6	930	255.33	12 600	0.9	42	**2KJ3207 - ■ DB21 - ■ ■ Q1**	
	6.2	845	232.12	13 400	0.99	42	**2KJ3207 - ■ DB21 - ■ ■ P1**	
	7.0	755	207.10	13 500	1.1	42	**2KJ3207 - ■ DB21 - ■ ■ N1**	
	7.8	675	185.70	13 600	1.2	42	**2KJ3207 - ■ DB21 - ■ ■ M1**	
	8.6	610	167.39	13 700	1.4	42	**2KJ3207 - ■ DB21 - ■ ■ L1**	
	9.3	560	154.51	13 700	1.5	42	**2KJ3207 - ■ DB21 - ■ ■ K1**	
	10	510	141.04	13 800	1.6	42	**2KJ3207 - ■ DB21 - ■ ■ J1**	
	12	425	117.03	13 900	2.0	42	**2KJ3207 - ■ DB21 - ■ ■ H1**	
	13	400	110.14	13 900	2.1	42	**2KJ3207 - ■ DB21 - ■ ■ G1**	
	14	375	104.03	14 000	2.2	42	**2KJ3207 - ■ DB21 - ■ ■ F1**	

Article No. supplement		
Shaft design	**1 or 9**	➞ page 10/43
Frequency and voltage	**2 or 9**	➞ page 11/2
Gearbox mounting type	**A, B, F or H**	➞ page 10/37

© Siemens AG 2017

3

Selection and ordering data (continued)

P_{rated}	n_2	T_2	i	F_{R2}	f_B	m	Article No.	Order code
kW	rpm	Nm	-	N	-	kg	(Article No. supplement ➞ below)	No. of poles
0.55	**D.69-LA71ZML4**							
	7.6	695	181.33	10 800	0.86	29	**2KJ3206 - ■ CH11 - ■ ■ M1**	
	8.5	615	160.29	10 900	0.98	29	**2KJ3206 - ■ CH11 - ■ ■ L1**	
	9.4	555	145.71	11 000	1.1	29	**2KJ3206 - ■ CH11 - ■ ■ K1**	
	11	485	127.63	11 100	1.2	29	**2KJ3206 - ■ CH11 - ■ ■ J1**	
	12	450	117.82	11 200	1.3	29	**2KJ3206 - ■ CH11 - ■ ■ H1**	
	13	400	104.31	11 300	1.5	29	**2KJ3206 - ■ CH11 - ■ ■ G1**	
	16	330	86.82	11 400	1.8	29	**2KJ3206 - ■ CH11 - ■ ■ F1**	
	17	310	81.71	11 400	1.9	29	**2KJ3206 - ■ CH11 - ■ ■ E1**	
	19	280	73.22	11 500	2.1	29	**2KJ3206 - ■ CH11 - ■ ■ D1**	
	D.69-LE80MB4							
	7.2	725	199.47	10 700	0.82	32	**2KJ3206 - ■ DB21 - ■ ■ N1**	
	7.9	660	181.33	10 800	0.91	32	**2KJ3206 - ■ DB21 - ■ ■ M1**	
	9.0	585	160.29	11 000	1.0	32	**2KJ3206 - ■ DB21 - ■ ■ L1**	
	9.9	530	145.71	11 100	1.1	32	**2KJ3206 - ■ DB21 - ■ ■ K1**	
	11	465	127.63	11 200	1.3	32	**2KJ3206 - ■ DB21 - ■ ■ J1**	
	12	430	117.82	11 200	1.4	32	**2KJ3206 - ■ DB21 - ■ ■ H1**	
	14	380	104.31	11 300	1.6	32	**2KJ3206 - ■ DB21 - ■ ■ G1**	
	17	315	86.82	11 400	1.9	32	**2KJ3206 - ■ DB21 - ■ ■ F1**	
	18	295	81.71	11 400	2.0	32	**2KJ3206 - ■ DB21 - ■ ■ E1**	
	20	265	73.22	11 500	2.2	32	**2KJ3206 - ■ DB21 - ■ ■ D1**	
	D.59-LE80MB4							
	9.6	545	149.81	6 400	0.82	27	**2KJ3205 - ■ DB21 - ■ ■ L1**	
	11	495	136.19	7 300	0.91	27	**2KJ3205 - ■ DB21 - ■ ■ K1**	
	12	435	119.30	7 690	1.0	27	**2KJ3205 - ■ DB21 - ■ ■ J1**	
	13	400	110.12	7 740	1.1	27	**2KJ3205 - ■ DB21 - ■ ■ H1**	
	15	355	97.50	7 820	1.3	27	**2KJ3205 - ■ DB21 - ■ ■ G1**	
	18	295	81.15	7 910	1.5	27	**2KJ3205 - ■ DB21 - ■ ■ F1**	
	19	275	76.38	7 950	1.6	27	**2KJ3205 - ■ DB21 - ■ ■ E1**	
	21	250	68.43	7 990	1.8	27	**2KJ3205 - ■ DB21 - ■ ■ D1**	
	D.59-LA71ZML4							
	10	520	136.19	6 840	0.86	25	**2KJ3205 - ■ CH11 - ■ ■ K1**	
	11	455	119.30	7 650	0.98	25	**2KJ3205 - ■ CH11 - ■ ■ J1**	
	12	420	110.12	7 710	1.1	25	**2KJ3205 - ■ CH11 - ■ ■ H1**	
	14	370	97.50	7 790	1.2	25	**2KJ3205 - ■ CH11 - ■ ■ G1**	
	17	310	81.15	7 890	1.4	25	**2KJ3205 - ■ CH11 - ■ ■ F1**	
	18	290	76.38	7 920	1.5	25	**2KJ3205 - ■ CH11 - ■ ■ E1**	
	20	260	68.43	7 970	1.7	25	**2KJ3205 - ■ CH11 - ■ ■ D1**	
	Z.59-LE80MB4							
	25	205	56.99	8 060	2.2	27	**2KJ3105 - ■ DB21 - ■ ■ A2**	
	28	189	51.81	8 080	2.4	27	**2KJ3105 - ■ DB21 - ■ ■ X1**	
	Z.59-LA71ZML4							
	24	215	56.99	8 040	2.1	24	**2KJ3105 - ■ CH11 - ■ ■ A2**	
	26	199	51.81	8 070	2.3	24	**2KJ3105 - ■ CH11 - ■ ■ X1**	
	D.49-LA71ZML4							
	14	385	100.75	4 130	0.83	22	**2KJ3204 - ■ CH11 - ■ ■ H1**	
	15	340	89.20	5 270	0.94	22	**2KJ3204 - ■ CH11 - ■ ■ G1**	
	18	285	74.24	5 970	1.1	22	**2KJ3204 - ■ CH11 - ■ ■ F1**	
	20	265	69.88	6 010	1.2	22	**2KJ3204 - ■ CH11 - ■ ■ E1**	
	22	240	62.61	6 060	1.3	22	**2KJ3204 - ■ CH11 - ■ ■ D1**	

Article No. supplement		
Shaft design	**1 or 9**	➞ page 10/43
Frequency and voltage	**2 or 9**	➞ page 11/2
Gearbox mounting type	**A, B, F or H**	➞ page 10/37

© Siemens AG 2017

Selection and ordering data (continued)

P_{rated}	n_2	T_2	i	F_{R2}	f_B	m	Article No.	Order code
kW	rpm	Nm	-	N	-	kg	(Article No. supplement ➞ below)	No. of poles
0.55	**D.49-LE80MB4**							
	13	395	109.14	3 880	0.80	25	**2KJ3204 - ■ DB21 - ■ ■ J1**	
	14	365	100.75	4 640	0.87	25	**2KJ3204 - ■ DB21 - ■ ■ H1**	
	16	325	89.20	5 660	0.98	25	**2KJ3204 - ■ DB21 - ■ ■ G1**	
	19	270	74.24	6 000	1.2	25	**2KJ3204 - ■ DB21 - ■ ■ F1**	
	21	255	69.88	6 030	1.3	25	**2KJ3204 - ■ DB21 - ■ ■ E1**	
	23	225	62.61	6 090	1.4	25	**2KJ3204 - ■ DB21 - ■ ■ D1**	
	Z.49-LA71ZML4							
	26	200	52.14	6 150	1.6	22	**2KJ3104 - ■ CH11 - ■ ■ B2**	
	29	182	47.40	6 180	1.8	22	**2KJ3104 - ■ CH11 - ■ ■ A2**	
	34	155	40.31	6 240	2.1	22	**2KJ3104 - ■ CH11 - ■ ■ X1**	
	37	141	36.65	6 260	2.3	22	**2KJ3104 - ■ CH11 - ■ ■ W1**	
	42	125	32.70	6 300	2.6	22	**2KJ3104 - ■ CH11 - ■ ■ V1**	
	47	112	29.32	6 240	2.8	22	**2KJ3104 - ■ CH11 - ■ ■ U1**	
	Z.49-LE80MB4							
	28	190	52.14	6 170	1.7	25	**2KJ3104 - ■ DB21 - ■ ■ B2**	
	30	173	47.40	6 200	1.9	25	**2KJ3104 - ■ DB21 - ■ ■ A2**	
	36	147	40.31	6 250	2.2	25	**2KJ3104 - ■ DB21 - ■ ■ X1**	
	39	134	36.65	6 280	2.4	25	**2KJ3104 - ■ DB21 - ■ ■ W1**	
	44	119	32.70	6 310	2.7	25	**2KJ3104 - ■ DB21 - ■ ■ V1**	
	D.39-LA71ZML4							
	22	240	63.43	3 360	0.82	13	**2KJ3203 - ■ CH11 - ■ ■ E1**	
	D.39-LE80MB4							
	23	230	63.43	3 610	0.86	15	**2KJ3203 - ■ DB21 - ■ ■ E1**	
	Z.39-LA71ZML4							
	24	215	55.95	3 990	0.93	12	**2KJ3103 - ■ CH11 - ■ ■ A2**	
	28	191	49.75	4 590	1.0	12	**2KJ3103 - ■ CH11 - ■ ■ X1**	
	31	167	43.68	5 090	1.2	12	**2KJ3103 - ■ CH11 - ■ ■ W1**	
	35	152	39.71	5 180	1.3	12	**2KJ3103 - ■ CH11 - ■ ■ V1**	
	40	130	33.97	5 270	1.5	12	**2KJ3103 - ■ CH11 - ■ ■ U1**	
	44	118	30.88	5 310	1.7	12	**2KJ3103 - ■ CH11 - ■ ■ T1**	
	50	105	27.30	5 300	1.9	12	**2KJ3103 - ■ CH11 - ■ ■ S1**	
	55	95	24.82	5 300	2.1	12	**2KJ3103 - ■ CH11 - ■ ■ R1**	
	63	83	21.74	5 270	2.4	12	**2KJ3103 - ■ CH11 - ■ ■ Q1**	
	68	77	20.07	5 220	2.6	12	**2KJ3103 - ■ CH11 - ■ ■ P1**	
	77	68	17.77	5 070	2.9	12	**2KJ3103 - ■ CH11 - ■ ■ N1**	
	93	57	14.79	4 810	3.4	12	**2KJ3103 - ■ CH11 - ■ ■ M1**	
	98	53	13.92	4 720	3.5	12	**2KJ3103 - ■ CH11 - ■ ■ L1**	
	Z.39-LE80MB4							
	29	181	49.75	4 840	1.1	14	**2KJ3103 - ■ DB21 - ■ ■ X1**	
	33	159	43.68	5 140	1.3	14	**2KJ3103 - ■ DB21 - ■ ■ W1**	
	36	145	39.71	5 200	1.4	14	**2KJ3103 - ■ DB21 - ■ ■ V1**	
	42	124	33.97	5 280	1.6	14	**2KJ3103 - ■ DB21 - ■ ■ U1**	
	47	113	30.88	5 300	1.8	14	**2KJ3103 - ■ DB21 - ■ ■ T1**	
	53	100	27.30	5 290	2.0	14	**2KJ3103 - ■ DB21 - ■ ■ S1**	
	58	90	24.82	5 300	2.2	14	**2KJ3103 - ■ DB21 - ■ ■ R1**	
	66	79	21.74	5 250	2.5	14	**2KJ3103 - ■ DB21 - ■ ■ Q1**	
	72	73	20.07	5 180	2.7	14	**2KJ3103 - ■ DB21 - ■ ■ P1**	
	81	65	17.77	5 000	3.1	14	**2KJ3103 - ■ DB21 - ■ ■ N1**	

Article No. supplement		
Shaft design	**1 or 9**	➞ page 10/43
Frequency and voltage	**2 or 9**	➞ page 11/2
Gearbox mounting type	**A, B, F or H**	➞ page 10/37

© Siemens AG 2017

3

Selection and ordering data (continued)

P_{rated}	n_2	T_2	i	F_{R2}	f_B	m	Article No.	Order code
kW	rpm	Nm	-	N	-	kg	(Article No. supplement ➞ below)	No. of poles
0.55	**Z.29-LA71ZML4**							
	33	159	41.40	3 200	0.88	11	**2KJ3102 - ■ CH11 - ■ ■ A2**	
	37	141	36.72	3 680	0.99	11	**2KJ3102 - ■ CH11 - ■ ■ X1**	
	43	122	31.86	3 940	1.1	11	**2KJ3102 - ■ CH11 - ■ ■ W1**	
	47	111	28.96	3 850	1.3	11	**2KJ3102 - ■ CH11 - ■ ■ V1**	
	55	95	24.84	3 720	1.5	11	**2KJ3102 - ■ CH11 - ■ ■ U1**	
	61	87	22.58	3 630	1.6	11	**2KJ3102 - ■ CH11 - ■ ■ T1**	
	69	76	19.80	3 520	1.8	11	**2KJ3102 - ■ CH11 - ■ ■ S1**	
	78	68	17.67	3 420	2.1	11	**2KJ3102 - ■ CH11 - ■ ■ R1**	
	87	60	15.75	3 320	2.3	11	**2KJ3102 - ■ CH11 - ■ ■ Q1**	
	94	56	14.54	3 250	2.2	11	**2KJ3102 - ■ CH11 - ■ ■ P1**	
	108	49	12.73	3 130	2.9	11	**2KJ3102 - ■ CH11 - ■ ■ N1**	
	123	43	11.16	3 020	3.3	11	**2KJ3102 - ■ CH11 - ■ ■ M1**	
	135	39	10.12	2 940	3.6	11	**2KJ3102 - ■ CH11 - ■ ■ L1**	
	144	36	9.53	2 890	3.8	11	**2KJ3102 - ■ CH11 - ■ ■ K1**	
	198	26	6.92	2 600	2.8	11	**2KJ3102 - ■ CH11 - ■ ■ G1**	
	226	23	6.06	2 500	4.3	11	**2KJ3102 - ■ CH11 - ■ ■ F1**	
	258	20	5.31	2 410	4.5	11	**2KJ3102 - ■ CH11 - ■ ■ E1**	
	284	18	4.82	2 340	4.7	11	**2KJ3102 - ■ CH11 - ■ ■ D1**	
	302	17	4.54	2 300	4.8	11	**2KJ3102 - ■ CH11 - ■ ■ C1**	
	342	15	4.00	2 210	5.0	11	**2KJ3102 - ■ CH11 - ■ ■ B1**	
	395	13	3.47	2 120	5.3	11	**2KJ3102 - ■ CH11 - ■ ■ A1**	
	Z.29-LE80MB4							
	39	134	36.72	3 860	1.0	13	**2KJ3102 - ■ DB21 - ■ ■ X1**	
	45	116	31.86	3 900	1.2	13	**2KJ3102 - ■ DB21 - ■ ■ W1**	
	50	106	28.96	3 810	1.3	13	**2KJ3102 - ■ DB21 - ■ ■ V1**	
	58	91	24.84	3 670	1.5	13	**2KJ3102 - ■ DB21 - ■ ■ U1**	
	64	82	22.58	3 590	1.7	13	**2KJ3102 - ■ DB21 - ■ ■ T1**	
	73	72	19.80	3 480	1.9	13	**2KJ3102 - ■ DB21 - ■ ■ S1**	
	81	64	17.67	3 380	2.2	13	**2KJ3102 - ■ DB21 - ■ ■ R1**	
	91	57	15.75	3 280	2.4	13	**2KJ3102 - ■ DB21 - ■ ■ Q1**	
	99	53	14.54	3 200	2.3	13	**2KJ3102 - ■ DB21 - ■ ■ P1**	
	113	46	12.73	3 090	3.0	13	**2KJ3102 - ■ DB21 - ■ ■ N1**	
	129	41	11.16	2 980	3.4	13	**2KJ3102 - ■ DB21 - ■ ■ M1**	
	142	37	10.12	2 900	3.8	13	**2KJ3102 - ■ DB21 - ■ ■ L1**	
	151	35	9.53	2 850	4.0	13	**2KJ3102 - ■ DB21 - ■ ■ K1**	
	208	25	6.92	2 560	3.0	13	**2KJ3102 - ■ DB21 - ■ ■ G1**	
	238	22	6.06	2 460	4.5	13	**2KJ3102 - ■ DB21 - ■ ■ F1**	
	271	19	5.31	2 370	4.7	13	**2KJ3102 - ■ DB21 - ■ ■ E1**	
	299	18	4.82	2 300	4.9	13	**2KJ3102 - ■ DB21 - ■ ■ D1**	
	317	17	4.54	2 260	5.1	13	**2KJ3102 - ■ DB21 - ■ ■ C1**	
	360	15	4.00	2 170	5.2	13	**2KJ3102 - ■ DB21 - ■ ■ B1**	
	415	13	3.47	2 080	5.5	13	**2KJ3102 - ■ DB21 - ■ ■ A1**	
	Z.19-LA71ZML4							
	44	119	30.97	1 260	0.84	9	**2KJ3101 - ■ CH11 - ■ ■ V1**	
	51	103	26.91	1 590	0.97	9	**2KJ3101 - ■ CH11 - ■ ■ U1**	
	56	94	24.46	1 770	1.1	9	**2KJ3101 - ■ CH11 - ■ ■ T1**	
	66	80	20.82	2 060	1.3	9	**2KJ3101 - ■ CH11 - ■ ■ S1**	
	72	72	18.92	2 130	1.4	9	**2KJ3101 - ■ CH11 - ■ ■ R1**	

Article No. supplement		
Shaft design	**1 or 9**	➞ page 10/43
Frequency and voltage	**2 or 9**	➞ page 11/2
Gearbox mounting type	**A, B, F or H**	➞ page 10/37

© Siemens AG 2017

Selection and ordering data (continued)

P_{rated} kW	n_2 rpm	T_2 Nm	i -	F_{R2} N	f_B -	m kg	Article No. (Article No. supplement ➞ below)	Order code No. of poles
0.55	**Z.19-LA71ZML4**							
	83	63	16.50	2 070	1.6	9	**2KJ3101 - ■ CH11 - ■ ■ Q1**	
	93	57	14.77	2 020	1.7	9	**2KJ3101 - ■ CH11 - ■ ■ P1**	
	104	50	13.12	1 980	1.8	9	**2KJ3101 - ■ CH11 - ■ ■ N1**	
	113	46	12.11	1 950	1.9	9	**2KJ3101 - ■ CH11 - ■ ■ M1**	
	130	40	10.52	1 880	2.1	9	**2KJ3101 - ■ CH11 - ■ ■ L1**	
	150	35	9.14	1 820	2.2	9	**2KJ3101 - ■ CH11 - ■ ■ K1**	
	166	32	8.25	1 770	2.3	9	**2KJ3101 - ■ CH11 - ■ ■ J1**	
	177	30	7.76	1 740	2.5	9	**2KJ3101 - ■ CH11 - ■ ■ H1**	
	202	26	6.77	1 680	2.6	9	**2KJ3101 - ■ CH11 - ■ ■ G1**	
	219	24	6.25	1 560	2.3	9	**2KJ3101 - ■ CH11 - ■ ■ F1**	
	252	21	5.43	1 510	2.5	9	**2KJ3101 - ■ CH11 - ■ ■ E1**	
	291	18	4.71	1 460	2.7	9	**2KJ3101 - ■ CH11 - ■ ■ D1**	
	322	16	4.26	1 430	2.9	9	**2KJ3101 - ■ CH11 - ■ ■ C1**	
	342	15	4.01	1 410	3.0	9	**2KJ3101 - ■ CH11 - ■ ■ B1**	
	Z.19-LE80MB4							
	46	113	30.97	1 390	0.89	11	**2KJ3101 - ■ DB21 - ■ ■ V1**	
	54	98	26.91	1 690	1.0	11	**2KJ3101 - ■ DB21 - ■ ■ U1**	
	59	89	24.46	1 880	1.1	11	**2KJ3101 - ■ DB21 - ■ ■ T1**	
	69	76	20.82	2 140	1.3	11	**2KJ3101 - ■ DB21 - ■ ■ S1**	
	76	69	18.92	2 110	1.4	11	**2KJ3101 - ■ DB21 - ■ ■ R1**	
	87	60	16.50	2 050	1.6	11	**2KJ3101 - ■ DB21 - ■ ■ Q1**	
	97	54	14.77	2 010	1.8	11	**2KJ3101 - ■ DB21 - ■ ■ P1**	
	110	48	13.12	1 950	1.9	11	**2KJ3101 - ■ DB21 - ■ ■ N1**	
	119	44	12.11	1 920	2.0	11	**2KJ3101 - ■ DB21 - ■ ■ M1**	
	137	38	10.52	1 860	2.2	11	**2KJ3101 - ■ DB21 - ■ ■ L1**	
	158	33	9.14	1 800	2.3	11	**2KJ3101 - ■ DB21 - ■ ■ K1**	
	175	30	8.25	1 750	2.5	11	**2KJ3101 - ■ DB21 - ■ ■ J1**	
	186	28	7.76	1 730	2.6	11	**2KJ3101 - ■ DB21 - ■ ■ H1**	
	213	25	6.77	1 660	2.8	11	**2KJ3101 - ■ DB21 - ■ ■ G1**	
	230	23	6.25	1 540	2.5	11	**2KJ3101 - ■ DB21 - ■ ■ F1**	
	265	20	5.43	1 490	2.7	11	**2KJ3101 - ■ DB21 - ■ ■ E1**	
	306	17	4.71	1 450	2.9	11	**2KJ3101 - ■ DB21 - ■ ■ D1**	
	338	16	4.26	1 400	3.0	11	**2KJ3101 - ■ DB21 - ■ ■ C1**	
	359	15	4.01	1 380	3.1	11	**2KJ3101 - ■ DB21 - ■ ■ B1**	
	413	13	3.49	1 330	3.4	11	**2KJ3101 - ■ DB21 - ■ ■ A1**	
	Z.19-LA71MH2							
	170	31	16.50	1 760	3.2	9	**2KJ3101 - ■ CE11 - ■ ■ Q1**	**P00**
	190	28	14.77	1 710	3.4	9	**2KJ3101 - ■ CE11 - ■ ■ P1**	**P00**
	213	25	13.12	1 660	3.7	9	**2KJ3101 - ■ CE11 - ■ ■ N1**	**P00**
	231	23	12.11	1 620	3.9	9	**2KJ3101 - ■ CE11 - ■ ■ M1**	**P00**
	266	20	10.52	1 560	4.2	9	**2KJ3101 - ■ CE11 - ■ ■ L1**	**P00**
	306	17	9.14	1 510	4.5	9	**2KJ3101 - ■ CE11 - ■ ■ K1**	**P00**
	339	16	8.25	1 460	4.8	9	**2KJ3101 - ■ CE11 - ■ ■ J1**	**P00**
	361	15	7.76	1 430	5.0	9	**2KJ3101 - ■ CE11 - ■ ■ H1**	**P00**
	414	13	6.77	1 380	5.4	9	**2KJ3101 - ■ CE11 - ■ ■ G1**	**P00**
	448	12	6.25	1 300	4.8	9	**2KJ3101 - ■ CE11 - ■ ■ F1**	**P00**
	516	10	5.43	1 260	5.2	9	**2KJ3101 - ■ CE11 - ■ ■ E1**	**P00**
	594	9	4.71	1 210	5.5	9	**2KJ3101 - ■ CE11 - ■ ■ D1**	**P00**

Article No. supplement		
Shaft design	**1 or 9**	➞ page 10/43
Frequency and voltage	**2 or 9**	➞ page 11/2
Gearbox mounting type	**A, B, F or H**	➞ page 10/37

© Siemens AG 2017

3

Selection and ordering data (continued)

P_{rated} kW	n_2 rpm	T_2 Nm	i -	F_{R2} N	f_B -	m kg	Article No. (Article No. supplement ➞ below)	Order code No. of poles
0.55	**Z.19-LA71MH2**							
	657	8	4.26	1 170	5.9	9	**2KJ3101 - ■ CE11 - ■ ■ C1**	**P00**
	698	8	4.01	1 150	6.1	9	**2KJ3101 - ■ CE11 - ■ ■ B1**	**P00**
	E.69-LA71ZML4							
	147	36	9.30	6 100	3.4	25	**2KJ3003 - ■ CH11 - ■ ■ S1**	
	162	32	8.45	6 100	3.2	25	**2KJ3003 - ■ CH11 - ■ ■ R1**	
	E.69-LE80MB4							
	155	34	9.30	6 100	3.5	28	**2KJ3003 - ■ DB21 - ■ ■ S1**	
	170	31	8.45	6 100	3.4	28	**2KJ3003 - ■ DB21 - ■ ■ R1**	
	E.49-LA71ZML4							
	141	37	9.70	4 000	2.3	18	**2KJ3002 - ■ CH11 - ■ ■ S1**	
	155	34	8.82	4 000	3.2	18	**2KJ3002 - ■ CH11 - ■ ■ R1**	
	183	29	7.50	4 000	3.7	18	**2KJ3002 - ■ CH11 - ■ ■ Q1**	
	201	26	6.82	4 000	4.0	18	**2KJ3002 - ■ CH11 - ■ ■ P1**	
	225	23	6.08	4 000	4.5	18	**2KJ3002 - ■ CH11 - ■ ■ N1**	
	E.49-LE80MB4							
	148	35	9.70	4 000	2.4	21	**2KJ3002 - ■ DB21 - ■ ■ S1**	
	163	32	8.82	4 000	3.4	21	**2KJ3002 - ■ DB21 - ■ ■ R1**	
	192	27	7.50	4 000	3.9	21	**2KJ3002 - ■ DB21 - ■ ■ Q1**	
	211	25	6.82	4 000	4.2	21	**2KJ3002 - ■ DB21 - ■ ■ P1**	
	E.39-LE80MB4							
	176	30	8.20	3 000	1.1	15	**2KJ3001 - ■ DB21 - ■ ■ R1**	
	200	26	7.20	3 000	1.5	15	**2KJ3001 - ■ DB21 - ■ ■ Q1**	
	220	24	6.55	3 000	1.7	15	**2KJ3001 - ■ DB21 - ■ ■ P1**	
	257	20	5.60	3 000	2.0	15	**2KJ3001 - ■ DB21 - ■ ■ N1**	
	283	19	5.09	3 000	2.2	15	**2KJ3001 - ■ DB21 - ■ ■ M1**	
	320	16	4.50	3 000	2.9	15	**2KJ3001 - ■ DB21 - ■ ■ L1**	
	352	15	4.09	3 000	3.2	15	**2KJ3001 - ■ DB21 - ■ ■ K1**	
	402	13	3.58	3 000	4.4	15	**2KJ3001 - ■ DB21 - ■ ■ J1**	
	435	12	3.31	3 000	4.8	15	**2KJ3001 - ■ DB21 - ■ ■ H1**	
	E.39-LA71ZML4							
	149	35	9.22	3 000	0.85	13	**2KJ3001 - ■ CH11 - ■ ■ S1**	
	167	31	8.20	3 000	1.1	13	**2KJ3001 - ■ CH11 - ■ ■ R1**	
	190	28	7.20	3 000	1.4	13	**2KJ3001 - ■ CH11 - ■ ■ Q1**	
	209	25	6.55	3 000	1.6	13	**2KJ3001 - ■ CH11 - ■ ■ P1**	
	245	22	5.60	3 000	1.9	13	**2KJ3001 - ■ CH11 - ■ ■ N1**	
	269	20	5.09	3 000	2.0	13	**2KJ3001 - ■ CH11 - ■ ■ M1**	
	304	17	4.50	3 000	2.8	13	**2KJ3001 - ■ CH11 - ■ ■ L1**	
	335	16	4.09	3 000	3.1	13	**2KJ3001 - ■ CH11 - ■ ■ K1**	
	383	14	3.58	3 000	4.2	13	**2KJ3001 - ■ CH11 - ■ ■ J1**	
	414	13	3.31	3 000	4.6	13	**2KJ3001 - ■ CH11 - ■ ■ H1**	
0.75	**D.129-LE90SQ6P**							
	2.5	2 880	373.00	28 300	1.7	174	**2KJ3211 - ■ EC23 - ■ ■ S1**	**P01**
	2.7	2 660	344.17	28 400	1.9	174	**2KJ3211 - ■ EC23 - ■ ■ R1**	**P01**
	2.9	2 450	316.90	28 500	2.0	174	**2KJ3211 - ■ EC23 - ■ ■ Q1**	**P01**
	D.109-LE90SQ6P							
	2.7	2 700	348.88	20 200	1.1	111	**2KJ3210 - ■ EC23 - ■ ■ T1**	**P01**
	2.9	2 430	314.98	20 200	1.3	111	**2KJ3210 - ■ EC23 - ■ ■ S1**	**P01**
	3.2	2 210	285.72	20 200	1.4	111	**2KJ3210 - ■ EC23 - ■ ■ R1**	**P01**
	3.5	2 040	263.74	20 200	1.5	111	**2KJ3210 - ■ EC23 - ■ ■ Q1**	**P01**

Article No. supplement		
Shaft design	**1 or 9**	➞ page 10/43
Frequency and voltage	**2 or 9**	➞ page 11/2
Gearbox mounting type	**A, B, F or H**	➞ page 10/37

© Siemens AG 2017

Selection and ordering data (continued)

P_{rated}	n_2	T_2	i	F_{R2}	f_B	m	Article No.	Order code
kW	rpm	Nm	-	N	-	kg	(Article No. supplement ➞ below)	No. of poles
0.75	**D.109-LE90SQ6P**							
	3.9	1 850	239.75	20 200	1.7	111	**2KJ3210 - ■ EC23 - ■ ■ P1**	**P01**
	D.89-LE90SQ6P							
	3.6	1 960	254.09	18 500	0.85	69	**2KJ3208 - ■ EC23 - ■ ■ Q1**	**P01**
	4.0	1 760	228.45	18 500	0.95	69	**2KJ3208 - ■ EC23 - ■ ■ P1**	**P01**
	D.89-LE80ZMQ4P							
	4.7	1 530	311.60	18 500	1.1	67	**2KJ3208 - ■ DF23 - ■ ■ S1**	
	5.1	1 390	283.28	18 500	1.2	67	**2KJ3208 - ■ DF23 - ■ ■ R1**	
	5.7	1 250	254.09	18 500	1.3	67	**2KJ3208 - ■ DF23 - ■ ■ Q1**	
	6.3	1 120	228.45	18 500	1.5	67	**2KJ3208 - ■ DF23 - ■ ■ P1**	
	7.0	1 020	206.62	18 500	1.6	67	**2KJ3208 - ■ DF23 - ■ ■ N1**	
	7.6	940	190.73	18 500	1.8	67	**2KJ3208 - ■ DF23 - ■ ■ M1**	
	8.3	860	174.71	18 500	1.9	67	**2KJ3208 - ■ DF23 - ■ ■ L1**	
	D.79-LE80ZMQ4P							
	7.0	1 020	207.10	11 200	0.82	44	**2KJ3207 - ■ DF23 - ■ ■ N1**	
	7.8	915	185.70	12 800	0.92	44	**2KJ3207 - ■ DF23 - ■ ■ M1**	
	8.7	825	167.39	13 400	1.0	44	**2KJ3207 - ■ DF23 - ■ ■ L1**	
	9.4	760	154.51	13 500	1.1	44	**2KJ3207 - ■ DF23 - ■ ■ K1**	
	10	695	141.04	13 600	1.2	44	**2KJ3207 - ■ DF23 - ■ ■ J1**	
	12	575	117.03	13 700	1.5	44	**2KJ3207 - ■ DF23 - ■ ■ H1**	
	13	540	110.14	13 800	1.5	44	**2KJ3207 - ■ DF23 - ■ ■ G1**	
	14	510	104.03	13 800	1.6	44	**2KJ3207 - ■ DF23 - ■ ■ F1**	
	16	435	88.52	13 900	1.9	44	**2KJ3207 - ■ DF23 - ■ ■ E1**	
	19	375	75.83	14 000	2.2	44	**2KJ3207 - ■ DF23 - ■ ■ D1**	
	D.69-LE80ZMQ4P							
	10	720	145.71	10 700	0.83	34	**2KJ3206 - ■ DF23 - ■ ■ K1**	
	11	630	127.63	10 900	0.95	34	**2KJ3206 - ■ DF23 - ■ ■ J1**	
	12	580	117.82	11 000	1.0	34	**2KJ3206 - ■ DF23 - ■ ■ H1**	
	14	515	104.31	11 100	1.2	34	**2KJ3206 - ■ DF23 - ■ ■ G1**	
	17	425	86.82	11 200	1.4	34	**2KJ3206 - ■ DF23 - ■ ■ F1**	
	18	400	81.71	11 300	1.5	34	**2KJ3206 - ■ DF23 - ■ ■ E1**	
	20	360	73.22	11 300	1.7	34	**2KJ3206 - ■ DF23 - ■ ■ D1**	
	Z.69-LE80ZMQ4P							
	24	300	60.97	11 400	2.0	33	**2KJ3106 - ■ DF23 - ■ ■ A2**	
	26	270	55.43	11 500	2.2	33	**2KJ3106 - ■ DF23 - ■ ■ X1**	
	D.59-LE80ZMQ4P							
	13	540	110.12	6 490	0.83	29	**2KJ3205 - ■ DF23 - ■ ■ H1**	
	15	480	97.50	7 560	0.93	29	**2KJ3205 - ■ DF23 - ■ ■ G1**	
	18	400	81.15	7 740	1.1	29	**2KJ3205 - ■ DF23 - ■ ■ F1**	
	19	375	76.38	7 780	1.2	29	**2KJ3205 - ■ DF23 - ■ ■ E1**	
	21	335	68.43	7 850	1.3	29	**2KJ3205 - ■ DF23 - ■ ■ D1**	
	Z.59-LE80ZMQ4P							
	25	280	56.99	7 940	1.6	29	**2KJ3105 - ■ DF23 - ■ ■ A2**	
	28	255	51.81	7 980	1.8	29	**2KJ3105 - ■ DF23 - ■ ■ X1**	
	33	215	44.06	8 040	2.1	29	**2KJ3105 - ■ DF23 - ■ ■ W1**	
	36	198	40.06	8 040	2.3	29	**2KJ3105 - ■ DF23 - ■ ■ V1**	
	41	177	35.74	7 790	2.5	29	**2KJ3105 - ■ DF23 - ■ ■ U1**	
	45	158	32.05	7 560	2.8	29	**2KJ3105 - ■ DF23 - ■ ■ T1**	
	D.49-LE80ZMQ4P							
	20	365	74.24	4 640	0.87	27	**2KJ3204 - ■ DF23 - ■ ■ F1**	

Article No. supplement		
Shaft design	**1 or 9**	➞ page 10/43
Frequency and voltage	**2 or 9**	➞ page 11/2
Gearbox mounting type	**A, B, F or H**	➞ page 10/37

© Siemens AG 2017

3

Selection and ordering data (continued)

P_{rated} kW	n_2 rpm	T_2 Nm	i -	F_{R2} N	f_B -	m kg	Article No. (Article No. supplement ➞ below)	Order code No. of poles
0.75	**D.49-LE80ZMQ4P**							
	21	345	69.88	5 150	0.93	27	**2KJ3204 - ■ DF23 - ■ ■ E1**	
	23	305	62.61	5 930	1.0	27	**2KJ3204 - ■ DF23 - ■ ■ D1**	
	Z.49-LE80ZMQ4P							
	28	255	52.14	6 030	1.2	27	**2KJ3104 - ■ DF23 - ■ ■ B2**	
	31	230	47.40	6 080	1.4	27	**2KJ3104 - ■ DF23 - ■ ■ A2**	
	36	199	40.31	6 150	1.6	27	**2KJ3104 - ■ DF23 - ■ ■ X1**	
	40	181	36.65	6 180	1.8	27	**2KJ3104 - ■ DF23 - ■ ■ W1**	
	44	162	32.70	6 160	2.0	27	**2KJ3104 - ■ DF23 - ■ ■ V1**	
	49	145	29.32	5 990	2.2	27	**2KJ3104 - ■ DF23 - ■ ■ U1**	
	55	131	26.43	5 820	2.5	27	**2KJ3104 - ■ DF23 - ■ ■ T1**	
	59	120	24.39	5 700	2.7	27	**2KJ3104 - ■ DF23 - ■ ■ S1**	
	65	110	22.27	5 550	2.9	27	**2KJ3104 - ■ DF23 - ■ ■ R1**	
	Z.39-LE80ZMQ4P							
	29	245	49.75	3 240	0.81	16	**2KJ3103 - ■ DF23 - ■ ■ X1**	
	33	215	43.68	3 720	0.93	16	**2KJ3103 - ■ DF23 - ■ ■ W1**	
	37	196	39.71	3 910	1.0	16	**2KJ3103 - ■ DF23 - ■ ■ V1**	
	43	168	33.97	4 160	1.2	16	**2KJ3103 - ■ DF23 - ■ ■ U1**	
	47	153	30.88	4 280	1.3	16	**2KJ3103 - ■ DF23 - ■ ■ T1**	
	53	135	27.30	4 400	1.5	16	**2KJ3103 - ■ DF23 - ■ ■ S1**	
	58	123	24.82	4 460	1.6	16	**2KJ3103 - ■ DF23 - ■ ■ R1**	
	67	107	21.74	4 530	1.9	16	**2KJ3103 - ■ DF23 - ■ ■ Q1**	
	72	99	20.07	4 540	2.0	16	**2KJ3103 - ■ DF23 - ■ ■ P1**	
	82	88	17.77	4 540	2.3	16	**2KJ3103 - ■ DF23 - ■ ■ N1**	
	98	73	14.79	4 510	2.6	16	**2KJ3103 - ■ DF23 - ■ ■ M1**	
	104	69	13.92	4 480	2.7	16	**2KJ3103 - ■ DF23 - ■ ■ L1**	
	116	62	12.47	4 410	2.9	16	**2KJ3103 - ■ DF23 - ■ ■ K1**	
	137	52	10.62	4 210	3.2	16	**2KJ3103 - ■ DF23 - ■ ■ J1**	
	159	45	9.10	4 020	3.5	16	**2KJ3103 - ■ DF23 - ■ ■ H1**	
	185	39	7.84	3 850	3.8	16	**2KJ3103 - ■ DF23 - ■ ■ G1**	
	224	32	6.46	3 630	4.6	16	**2KJ3103 - ■ DF23 - ■ ■ F1**	
	Z.29-LE80ZMQ4P							
	46	157	31.86	2 890	0.89	15	**2KJ3102 - ■ DF23 - ■ ■ W1**	
	50	143	28.96	3 050	0.98	15	**2KJ3102 - ■ DF23 - ■ ■ V1**	
	58	123	24.84	3 230	1.1	15	**2KJ3102 - ■ DF23 - ■ ■ U1**	
	64	112	22.58	3 320	1.3	15	**2KJ3102 - ■ DF23 - ■ ■ T1**	
	73	98	19.80	3 320	1.4	15	**2KJ3102 - ■ DF23 - ■ ■ S1**	
	82	87	17.67	3 240	1.6	15	**2KJ3102 - ■ DF23 - ■ ■ R1**	
	92	78	15.75	3 150	1.8	15	**2KJ3102 - ■ DF23 - ■ ■ Q1**	
	100	72	14.54	3 090	1.7	15	**2KJ3102 - ■ DF23 - ■ ■ P1**	
	114	63	12.73	2 990	2.2	15	**2KJ3102 - ■ DF23 - ■ ■ N1**	
	130	55	11.16	2 890	2.5	15	**2KJ3102 - ■ DF23 - ■ ■ M1**	
	143	50	10.12	2 810	2.8	15	**2KJ3102 - ■ DF23 - ■ ■ L1**	
	152	47	9.53	2 770	3.0	15	**2KJ3102 - ■ DF23 - ■ ■ K1**	
	173	42	8.40	2 670	3.3	15	**2KJ3102 - ■ DF23 - ■ ■ J1**	
	199	36	7.29	2 570	3.6	15	**2KJ3102 - ■ DF23 - ■ ■ H1**	
	210	34	6.92	2 490	2.2	15	**2KJ3102 - ■ DF23 - ■ ■ G1**	
	239	30	6.06	2 400	3.3	15	**2KJ3102 - ■ DF23 - ■ ■ F1**	
	273	26	5.31	2 320	3.5	15	**2KJ3102 - ■ DF23 - ■ ■ E1**	

Article No. supplement		
Shaft design	**1 or 9**	➞ page 10/43
Frequency and voltage	**2 or 9**	➞ page 11/2
Gearbox mounting type	**A, B, F or H**	➞ page 10/37

© Siemens AG 2017

Selection and ordering data (continued)

P_{rated} kW	n_2 rpm	T_2 Nm	i -	F_{R2} N	f_B -	m kg	Article No. (Article No. supplement ➞ below)	Order code No. of poles
0.75	**Z.29-LE80ZMQ4P**							
	301	24	4.82	2 250	3.6	15	**2KJ3102 - ■ DF23 - ■ ■ D1**	
	319	22	4.54	2 220	3.7	15	**2KJ3102 - ■ DF23 - ■ ■ C1**	
	362	20	4.00	2 130	3.8	15	**2KJ3102 - ■ DF23 - ■ ■ B1**	
	418	17	3.47	2 050	4.1	15	**2KJ3102 - ■ DF23 - ■ ■ A1**	
	Z.29-LE80ME2P							
	159	45	17.67	2 740	3.1	14	**2KJ3102 - ■ DB23 - ■ ■ R1**	**P00**
	178	40	15.75	2 650	3.5	14	**2KJ3102 - ■ DB23 - ■ ■ Q1**	**P00**
	193	37	14.54	2 600	3.2	14	**2KJ3102 - ■ DB23 - ■ ■ P1**	**P00**
	220	32	12.73	2 500	4.3	14	**2KJ3102 - ■ DB23 - ■ ■ N1**	**P00**
	405	18	6.92	2 060	4.2	14	**2KJ3102 - ■ DB23 - ■ ■ G1**	**P00**
	Z.19-LE80ZMQ4P							
	59	121	24.46	1 220	0.83	13	**2KJ3101 - ■ DF23 - ■ ■ T1**	
	70	103	20.82	1 590	0.97	13	**2KJ3101 - ■ DF23 - ■ ■ S1**	
	77	94	18.92	1 770	1.1	13	**2KJ3101 - ■ DF23 - ■ ■ R1**	
	88	82	16.50	1 900	1.2	13	**2KJ3101 - ■ DF23 - ■ ■ Q1**	
	98	73	14.77	1 870	1.3	13	**2KJ3101 - ■ DF23 - ■ ■ P1**	
	111	65	13.12	1 830	1.4	13	**2KJ3101 - ■ DF23 - ■ ■ N1**	
	120	60	12.11	1 810	1.5	13	**2KJ3101 - ■ DF23 - ■ ■ M1**	
	138	52	10.52	1 760	1.6	13	**2KJ3101 - ■ DF23 - ■ ■ L1**	
	159	45	9.14	1 710	1.7	13	**2KJ3101 - ■ DF23 - ■ ■ K1**	
	176	41	8.25	1 670	1.8	13	**2KJ3101 - ■ DF23 - ■ ■ J1**	
	187	38	7.76	1 650	1.9	13	**2KJ3101 - ■ DF23 - ■ ■ H1**	
	214	33	6.77	1 600	2.0	13	**2KJ3101 - ■ DF23 - ■ ■ G1**	
	232	31	6.25	1 460	1.8	13	**2KJ3101 - ■ DF23 - ■ ■ F1**	
	267	27	5.43	1 420	2.0	13	**2KJ3101 - ■ DF23 - ■ ■ E1**	
	308	23	4.71	1 380	2.1	13	**2KJ3101 - ■ DF23 - ■ ■ D1**	
	340	21	4.26	1 350	2.2	13	**2KJ3101 - ■ DF23 - ■ ■ C1**	
	362	20	4.01	1 330	2.3	13	**2KJ3101 - ■ DF23 - ■ ■ B1**	
	415	17	3.49	1 290	2.5	13	**2KJ3101 - ■ DF23 - ■ ■ A1**	
	Z.19-LE80ME2P							
	170	42	16.50	1 690	2.3	13	**2KJ3101 - ■ DB23 - ■ ■ Q1**	**P00**
	190	38	14.77	1 640	2.5	13	**2KJ3101 - ■ DB23 - ■ ■ P1**	**P00**
	214	34	13.12	1 590	2.7	13	**2KJ3101 - ■ DB23 - ■ ■ N1**	**P00**
	232	31	12.11	1 570	2.8	13	**2KJ3101 - ■ DB23 - ■ ■ M1**	**P00**
	267	27	10.52	1 510	3.1	13	**2KJ3101 - ■ DB23 - ■ ■ L1**	**P00**
	307	23	9.14	1 460	3.3	13	**2KJ3101 - ■ DB23 - ■ ■ K1**	**P00**
	340	21	8.25	1 420	3.5	13	**2KJ3101 - ■ DB23 - ■ ■ J1**	**P00**
	361	20	7.76	1 400	3.7	13	**2KJ3101 - ■ DB23 - ■ ■ H1**	**P00**
	414	17	6.77	1 350	3.9	13	**2KJ3101 - ■ DB23 - ■ ■ G1**	**P00**
	449	16	6.25	1 260	3.5	13	**2KJ3101 - ■ DB23 - ■ ■ F1**	**P00**
	517	14	5.43	1 220	3.8	13	**2KJ3101 - ■ DB23 - ■ ■ E1**	**P00**
	596	12	4.71	1 170	4.1	13	**2KJ3101 - ■ DB23 - ■ ■ D1**	**P00**
	658	11	4.26	1 140	4.3	13	**2KJ3101 - ■ DB23 - ■ ■ C1**	**P00**
	700	10	4.01	1 130	4.5	13	**2KJ3101 - ■ DB23 - ■ ■ B1**	**P00**
	804	9	3.49	1 080	4.8	13	**2KJ3101 - ■ DB23 - ■ ■ A1**	**P00**
	E.69-LE80ZMQ4P							
	156	46	9.30	6 100	2.6	30	**2KJ3003 - ■ DF23 - ■ ■ S1**	
	172	42	8.45	6 100	2.5	30	**2KJ3003 - ■ DF23 - ■ ■ R1**	

Article No. supplement		
Shaft design	**1 or 9**	➞ page 10/43
Frequency and voltage	**2 or 9**	➞ page 11/2
Gearbox mounting type	**A, B, F or H**	➞ page 10/37

© Siemens AG 2017

3

Selection and ordering data (continued)

P_{rated}	n_2	T_2	i	F_{R2}	f_B	m	Article No.	Order code
kW	rpm	Nm	-	N	-	kg	(Article No. supplement ➞ below)	No. of poles
0.75	**E.49-LE80ZMQ4P**							
	149	48	9.70	4 000	1.8	23	**2KJ3002 - ■ DF23 - ■ ■ S1**	
	164	44	8.82	4 000	2.5	23	**2KJ3002 - ■ DF23 - ■ ■ R1**	
	193	37	7.50	4 000	2.9	23	**2KJ3002 - ■ DF23 - ■ ■ Q1**	
	213	34	6.82	4 000	3.1	23	**2KJ3002 - ■ DF23 - ■ ■ P1**	
	238	30	6.08	4 000	3.5	23	**2KJ3002 - ■ DF23 - ■ ■ N1**	
	266	27	5.45	4 000	3.8	23	**2KJ3002 - ■ DF23 - ■ ■ M1**	
	295	24	4.92	4 000	4.2	23	**2KJ3002 - ■ DF23 - ■ ■ L1**	
	319	22	4.54	4 000	4.5	23	**2KJ3002 - ■ DF23 - ■ ■ K1**	
	350	20	4.14	4 000	5.0	23	**2KJ3002 - ■ DF23 - ■ ■ J1**	
	E.39-LE80ZMQ4P							
	177	40	8.20	3 000	0.84	17	**2KJ3001 - ■ DF23 - ■ ■ R1**	
	201	36	7.20	3 000	1.1	17	**2KJ3001 - ■ DF23 - ■ ■ Q1**	
	221	32	6.55	3 000	1.2	17	**2KJ3001 - ■ DF23 - ■ ■ P1**	
	259	28	5.60	3 000	1.4	17	**2KJ3001 - ■ DF23 - ■ ■ N1**	
	285	25	5.09	3 000	1.6	17	**2KJ3001 - ■ DF23 - ■ ■ M1**	
	322	22	4.50	3 000	2.2	17	**2KJ3001 - ■ DF23 - ■ ■ L1**	
	355	20	4.09	3 000	2.4	17	**2KJ3001 - ■ DF23 - ■ ■ K1**	
	405	18	3.58	3 000	3.3	17	**2KJ3001 - ■ DF23 - ■ ■ J1**	
	438	16	3.31	3 000	3.5	17	**2KJ3001 - ■ DF23 - ■ ■ H1**	
	495	14	2.93	3 000	4.5	17	**2KJ3001 - ■ DF23 - ■ ■ G1**	
	594	12	2.44	2 980	5.4	17	**2KJ3001 - ■ DF23 - ■ ■ F1**	
	633	11	2.29	2 920	5.8	17	**2KJ3001 - ■ DF23 - ■ ■ E1**	
1.1	**D.129-LE90ZLR6P**							
	2.5	4 190	373	27 500	1.2	177	**2KJ3211 - ■ EM23 - ■ ■ S1**	**P01**
	2.7	3 860	344.17	27 700	1.3	177	**2KJ3211 - ■ EM23 - ■ ■ R1**	**P01**
	3.0	3 560	316.90	27 900	1.4	177	**2KJ3211 - ■ EM23 - ■ ■ Q1**	**P01**
	3.5	3 030	270.24	28 200	1.6	177	**2KJ3211 - ■ EM23 - ■ ■ P1**	**P01**
	D.129-LE90SM4P							
	3.8	2 750	373.00	28 300	1.8	174	**2KJ3211 - ■ EK23 - ■ ■ S1**	
	4.1	2 530	344.17	28 500	2.0	174	**2KJ3211 - ■ EK23 - ■ ■ R1**	
	D.109-LE90ZLR6P							
	3.0	3 530	314.98	20 200	0.88	114	**2KJ3210 - ■ EM23 - ■ ■ S1**	**P01**
	3.3	3 210	285.72	20 200	0.97	114	**2KJ3210 - ■ EM23 - ■ ■ R1**	**P01**
	3.5	2 960	263.74	20 200	1.0	114	**2KJ3210 - ■ EM23 - ■ ■ Q1**	**P01**
	3.9	2 690	239.75	20 200	1.2	114	**2KJ3210 - ■ EM23 - ■ ■ P1**	**P01**
	D.109-LE90SM4P							
	4.1	2 570	348.88	20 200	1.2	111	**2KJ3210 - ■ EK23 - ■ ■ T1**	
	4.5	2 320	314.98	20 200	1.3	111	**2KJ3210 - ■ EK23 - ■ ■ S1**	
	5.0	2 100	285.72	20 200	1.5	111	**2KJ3210 - ■ EK23 - ■ ■ R1**	
	5.4	1 940	263.74	20 200	1.6	111	**2KJ3210 - ■ EK23 - ■ ■ Q1**	
	5.9	1 760	239.75	20 200	1.8	111	**2KJ3210 - ■ EK23 - ■ ■ P1**	
	7.0	1 490	203.01	20 200	2.1	111	**2KJ3210 - ■ EK23 - ■ ■ N1**	
	D.89-LE90SM4P							
	5.0	2 080	283.28	18 000	0.8	69	**2KJ3208 - ■ EK23 - ■ ■ R1**	
	5.6	1 870	254.09	18 500	0.9	69	**2KJ3208 - ■ EK23 - ■ ■ Q1**	
	6.2	1 680	228.45	18 500	1.0	69	**2KJ3208 - ■ EK23 - ■ ■ P1**	
	6.9	1 520	206.62	18 500	1.1	69	**2KJ3208 - ■ EK23 - ■ ■ N1**	
	7.5	1 400	190.73	18 500	1.2	69	**2KJ3208 - ■ EK23 - ■ ■ M1**	
	8.2	1 280	174.71	18 500	1.3	69	**2KJ3208 - ■ EK23 - ■ ■ L1**	

Article No. supplement		
Shaft design	**1 or 9**	➞ page 10/43
Frequency and voltage	**2 or 9**	➞ page 11/2
Gearbox mounting type	**A, B, F or H**	➞ page 10/37

© Siemens AG 2017

Selection and ordering data (continued)

P_{rated}	n_2	T_2	i	F_{R2}	f_B	m	Article No.	Order code
kW	rpm	Nm	-	N	-	kg	(Article No. supplement ➞ below)	No. of poles
1.1	**D.89-LE90SM4P**							
	9.7	1 080	146.59	18 500	1.6	69	**2KJ3208 - ■ EK23 - ■ ■ K1**	
	10	1 010	137.97	18 500	1.7	69	**2KJ3208 - ■ EK23 - ■ ■ J1**	
	11	930	126.58	18 500	1.8	69	**2KJ3208 - ■ EK23 - ■ ■ H1**	
	13	815	110.57	18 500	2.1	69	**2KJ3208 - ■ EK23 - ■ ■ G1**	
	D.79-LE90SM4P							
	10	1 040	141.04	10 900	0.81	46	**2KJ3207 - ■ EK23 - ■ ■ J1**	
	12	860	117.03	13 400	0.97	46	**2KJ3207 - ■ EK23 - ■ ■ H1**	
	13	810	110.14	13 400	1.0	46	**2KJ3207 - ■ EK23 - ■ ■ G1**	
	14	765	104.03	13 500	1.1	46	**2KJ3207 - ■ EK23 - ■ ■ F1**	
	16	650	88.52	13 600	1.3	46	**2KJ3207 - ■ EK23 - ■ ■ E1**	
	19	555	75.83	13 700	1.5	46	**2KJ3207 - ■ EK23 - ■ ■ D1**	
	21	490	66.67	13 800	1.7	46	**2KJ3207 - ■ EK23 - ■ ■ C1**	
	Z.79-LE90SM4P							
	26	400	54.47	13 900	2.1	45	**2KJ3107 - ■ EK23 - ■ ■ A2**	
	29	365	49.52	14 000	2.3	45	**2KJ3107 - ■ EK23 - ■ ■ X1**	
	D.69-LE90SM4P							
	16	640	86.82	10 900	0.94	34	**2KJ3206 - ■ EK23 - ■ ■ F1**	
	17	600	81.71	11 000	1.0	34	**2KJ3206 - ■ EK23 - ■ ■ E1**	
	19	540	73.22	11 100	1.1	34	**2KJ3206 - ■ EK23 - ■ ■ D1**	
	Z.69-LE90SM4P							
	23	445	60.97	11 200	1.3	34	**2KJ3106 - ■ EK23 - ■ ■ A2**	
	26	405	55.43	11 300	1.5	34	**2KJ3106 - ■ EK23 - ■ ■ X1**	
	30	345	47.14	11 400	1.7	34	**2KJ3106 - ■ EK23 - ■ ■ W1**	
	33	315	42.86	11 400	1.9	34	**2KJ3106 - ■ EK23 - ■ ■ V1**	
	37	280	38.24	11 500	2.1	34	**2KJ3106 - ■ EK23 - ■ ■ U1**	
	42	250	34.29	11 500	2.4	34	**2KJ3106 - ■ EK23 - ■ ■ T1**	
	46	225	30.90	11 500	2.6	34	**2KJ3106 - ■ EK23 - ■ ■ S1**	
	D.59-LE90SM4P							
	19	560	76.38	6 130	0.80	30	**2KJ3205 - ■ EK23 - ■ ■ E1**	
	21	500	68.43	7 210	0.89	30	**2KJ3205 - ■ EK23 - ■ ■ D1**	
	Z.59-LE90SM4P							
	25	420	56.99	7 710	1.1	29	**2KJ3105 - ■ EK23 - ■ ■ A2**	
	28	380	51.81	7 780	1.2	29	**2KJ3105 - ■ EK23 - ■ ■ X1**	
	32	325	44.06	7 860	1.4	29	**2KJ3105 - ■ EK23 - ■ ■ W1**	
	36	295	40.06	7 700	1.5	29	**2KJ3105 - ■ EK23 - ■ ■ V1**	
	40	260	35.74	7 510	1.7	29	**2KJ3105 - ■ EK23 - ■ ■ U1**	
	44	235	32.05	7 300	1.9	29	**2KJ3105 - ■ EK23 - ■ ■ T1**	
	49	210	28.89	7 120	2.1	29	**2KJ3105 - ■ EK23 - ■ ■ S1**	
	53	197	26.66	6 970	2.3	29	**2KJ3105 - ■ EK23 - ■ ■ R1**	
	59	179	24.34	6 800	2.5	29	**2KJ3105 - ■ EK23 - ■ ■ Q1**	
	71	149	20.20	6 470	3.0	29	**2KJ3105 - ■ EK23 - ■ ■ P1**	
	75	140	19.01	6 360	3.2	29	**2KJ3105 - ■ EK23 - ■ ■ N1**	
	Z.49-LE90SM4P							
	27	380	52.14	5 630	0.83	27	**2KJ3104 - ■ EK23 - ■ ■ B2**	
	30	345	47.40	5 850	0.92	27	**2KJ3104 - ■ EK23 - ■ ■ A2**	
	35	295	40.31	5 950	1.1	27	**2KJ3104 - ■ EK23 - ■ ■ X1**	
	39	270	36.65	6 000	1.2	27	**2KJ3104 - ■ EK23 - ■ ■ W1**	
	44	240	32.70	5 900	1.3	27	**2KJ3104 - ■ EK23 - ■ ■ V1**	
	49	215	29.32	5 750	1.5	27	**2KJ3104 - ■ EK23 - ■ ■ U1**	

Article No. supplement		
Shaft design	**1 or 9**	➞ page 10/43
Frequency and voltage	**2 or 9**	➞ page 11/2
Gearbox mounting type	**A, B, F or H**	➞ page 10/37

© Siemens AG 2017

3

Selection and ordering data (continued)

P_{rated}	n_2	T_2	i	F_{R2}	f_B	m	Article No.	Order code
kW	rpm	Nm	-	N	-	kg	(Article No. supplement ➞ below)	No. of poles
1.1	**Z.49-LE90SM4P**							
	54	195	26.43	5 600	1.6	27	**2KJ3104 - ■ EK23 - ■ ■ T1**	
	58	180	24.39	5 500	1.8	27	**2KJ3104 - ■ EK23 - ■ ■ S1**	
	64	164	22.27	5 370	1.9	27	**2KJ3104 - ■ EK23 - ■ ■ R1**	
	77	136	18.48	5 120	2.3	27	**2KJ3104 - ■ EK23 - ■ ■ Q1**	
	82	128	17.39	5 040	2.5	27	**2KJ3104 - ■ EK23 - ■ ■ P1**	
	87	121	16.42	4 960	2.6	27	**2KJ3104 - ■ EK23 - ■ ■ N1**	
	102	103	13.98	4 750	3.1	27	**2KJ3104 - ■ EK23 - ■ ■ M1**	
	119	88	11.97	4 550	3.6	27	**2KJ3104 - ■ EK23 - ■ ■ L1**	
	Z.39-LE90SM4P							
	42	250	33.97	2 160	0.80	18	**2KJ3103 - ■ EK23 - ■ ■ U1**	
	46	225	30.88	2 530	0.88	18	**2KJ3103 - ■ EK23 - ■ ■ T1**	
	52	200	27.30	2 820	0.99	18	**2KJ3103 - ■ EK23 - ■ ■ S1**	
	57	183	24.82	3 000	1.1	18	**2KJ3103 - ■ EK23 - ■ ■ R1**	
	66	160	21.74	3 250	1.2	18	**2KJ3103 - ■ EK23 - ■ ■ Q1**	
	71	148	20.07	3 360	1.4	18	**2KJ3103 - ■ EK23 - ■ ■ P1**	
	80	131	17.77	3 500	1.5	18	**2KJ3103 - ■ EK23 - ■ ■ N1**	
	96	109	14.79	3 650	1.8	18	**2KJ3103 - ■ EK23 - ■ ■ M1**	
	102	103	13.92	3 670	1.8	18	**2KJ3103 - ■ EK23 - ■ ■ L1**	
	114	92	12.47	3 720	2.0	18	**2KJ3103 - ■ EK23 - ■ ■ K1**	
	134	78	10.62	3 760	2.2	18	**2KJ3103 - ■ EK23 - ■ ■ J1**	
	157	67	9.10	3 740	2.4	18	**2KJ3103 - ■ EK23 - ■ ■ H1**	
	182	58	7.84	3 710	2.6	18	**2KJ3103 - ■ EK23 - ■ ■ G1**	
	221	48	6.46	3 330	3.1	18	**2KJ3103 - ■ EK23 - ■ ■ F1**	
	234	45	6.08	3 330	3.3	18	**2KJ3103 - ■ EK23 - ■ ■ E1**	
	261	40	5.45	3 310	3.5	18	**2KJ3103 - ■ EK23 - ■ ■ D1**	
	307	34	4.64	3 240	3.8	18	**2KJ3103 - ■ EK23 - ■ ■ C1**	
	358	29	3.98	3 100	4.1	18	**2KJ3103 - ■ EK23 - ■ ■ B1**	
	415	25	3.43	2 960	4.4	18	**2KJ3103 - ■ EK23 - ■ ■ A1**	
	Z.39-LE80ZMJ2P							
	160	66	17.77	3 740	3.0	16	**2KJ3103 - ■ DM23 - ■ ■ N1**	**P00**
	192	55	14.79	3 690	3.5	16	**2KJ3103 - ■ DM23 - ■ ■ M1**	**P00**
	204	52	13.92	3 650	3.7	16	**2KJ3103 - ■ DM23 - ■ ■ L1**	**P00**
	227	46	12.47	3 540	3.9	16	**2KJ3103 - ■ DM23 - ■ ■ K1**	**P00**
	267	39	10.62	3 380	4.3	16	**2KJ3103 - ■ DM23 - ■ ■ J1**	**P00**
	312	34	9.10	3 230	4.7	16	**2KJ3103 - ■ DM23 - ■ ■ H1**	**P00**
	362	29	7.84	3 090	5.1	16	**2KJ3103 - ■ DM23 - ■ ■ G1**	**P00**
	Z.29-LE90SM4P							
	63	166	22.58	1 930	0.84	17	**2KJ3102 - ■ EK23 - ■ ■ T1**	
	72	146	19.80	2 190	0.96	17	**2KJ3102 - ■ EK23 - ■ ■ S1**	
	81	130	17.67	2 380	1.1	17	**2KJ3102 - ■ EK23 - ■ ■ R1**	
	90	116	15.75	2 540	1.2	17	**2KJ3102 - ■ EK23 - ■ ■ Q1**	
	98	107	14.54	2 630	1.1	17	**2KJ3102 - ■ EK23 - ■ ■ P1**	
	112	94	12.73	2 730	1.5	17	**2KJ3102 - ■ EK23 - ■ ■ N1**	
	128	82	11.16	2 750	1.7	17	**2KJ3102 - ■ EK23 - ■ ■ M1**	
	141	75	10.12	2 690	1.9	17	**2KJ3102 - ■ EK23 - ■ ■ L1**	
	150	70	9.53	2 660	2.0	17	**2KJ3102 - ■ EK23 - ■ ■ K1**	
	170	62	8.40	2 580	2.2	17	**2KJ3102 - ■ EK23 - ■ ■ J1**	
	195	54	7.29	2 490	2.4	17	**2KJ3102 - ■ EK23 - ■ ■ H1**	

Article No. supplement		
Shaft design	**1 or 9**	➞ page 10/43
Frequency and voltage	**2 or 9**	➞ page 11/2
Gearbox mounting type	**A, B, F or H**	➞ page 10/37

© Siemens AG 2017

Selection and ordering data (continued)

P_{rated}	n_2	T_2	i	F_{R2}	f_B	m	Article No.	Order code
kW	rpm	Nm	-	N	-	kg	(Article No. supplement ➞ below)	No. of poles
1.1	**Z.29-LE90SM4P**							
	206	51	6.92	2 390	1.5	17	**2KJ3102 - ■ EK23 - ■ ■ G1**	
	235	45	6.06	2 310	2.2	17	**2KJ3102 - ■ EK23 - ■ ■ F1**	
	268	39	5.31	2 240	2.3	17	**2KJ3102 - ■ EK23 - ■ ■ E1**	
	296	36	4.82	2 180	2.4	17	**2KJ3102 - ■ EK23 - ■ ■ D1**	
	314	34	4.54	2 150	2.5	17	**2KJ3102 - ■ EK23 - ■ ■ C1**	
	356	30	4.00	2 080	2.6	17	**2KJ3102 - ■ EK23 - ■ ■ B1**	
	411	26	3.47	2 000	2.7	17	**2KJ3102 - ■ EK23 - ■ ■ A1**	
	Z.29-LE80ZMJ2P							
	160	66	17.67	2 610	2.1	15	**2KJ3102 - ■ DM23 - ■ ■ R1**	**P00**
	180	58	15.75	2 540	2.4	15	**2KJ3102 - ■ DM23 - ■ ■ Q1**	**P00**
	195	54	14.54	2 490	2.2	15	**2KJ3102 - ■ DM23 - ■ ■ P1**	**P00**
	223	47	12.73	2 410	3.0	15	**2KJ3102 - ■ DM23 - ■ ■ N1**	**P00**
	254	41	11.16	2 330	3.4	15	**2KJ3102 - ■ DM23 - ■ ■ M1**	**P00**
	280	38	10.12	2 260	3.7	15	**2KJ3102 - ■ DM23 - ■ ■ L1**	**P00**
	297	35	9.53	2 230	4.0	15	**2KJ3102 - ■ DM23 - ■ ■ K1**	**P00**
	338	31	8.40	2 150	4.4	15	**2KJ3102 - ■ DM23 - ■ ■ J1**	**P00**
	389	27	7.29	2 070	4.8	15	**2KJ3102 - ■ DM23 - ■ ■ H1**	**P00**
	410	26	6.92	2 000	2.9	15	**2KJ3102 - ■ DM23 - ■ ■ G1**	**P00**
	468	22	6.06	1 930	4.5	15	**2KJ3102 - ■ DM23 - ■ ■ F1**	**P00**
	534	20	5.31	1 860	4.6	15	**2KJ3102 - ■ DM23 - ■ ■ E1**	**P00**
	588	18	4.82	1 810	4.8	15	**2KJ3102 - ■ DM23 - ■ ■ D1**	**P00**
	624	17	4.54	1 780	5.0	15	**2KJ3102 - ■ DM23 - ■ ■ C1**	**P00**
	709	15	4.00	1 710	5.1	15	**2KJ3102 - ■ DM23 - ■ ■ B1**	**P00**
	817	13	3.47	1 640	5.4	15	**2KJ3102 - ■ DM23 - ■ ■ A1**	**P00**
	Z.19-LE80ZMJ2P							
	150	70	18.92	1 580	1.4	13	**2KJ3101 - ■ DM23 - ■ ■ R1**	**P00**
	172	61	16.50	1 550	1.6	13	**2KJ3101 - ■ DM23 - ■ ■ Q1**	**P00**
	192	55	14.77	1 520	1.7	13	**2KJ3101 - ■ DM23 - ■ ■ P1**	**P00**
	216	49	13.12	1 480	1.9	13	**2KJ3101 - ■ DM23 - ■ ■ N1**	**P00**
	234	45	12.11	1 460	2.0	13	**2KJ3101 - ■ DM23 - ■ ■ M1**	**P00**
	269	39	10.52	1 420	2.1	13	**2KJ3101 - ■ DM23 - ■ ■ L1**	**P00**
	310	34	9.14	1 380	2.3	13	**2KJ3101 - ■ DM23 - ■ ■ K1**	**P00**
	344	31	8.25	1 350	2.4	13	**2KJ3101 - ■ DM23 - ■ ■ J1**	**P00**
	365	29	7.76	1 330	2.5	13	**2KJ3101 - ■ DM23 - ■ ■ H1**	**P00**
	419	25	6.77	1 290	2.7	13	**2KJ3101 - ■ DM23 - ■ ■ G1**	**P00**
	454	23	6.25	1 180	2.4	13	**2KJ3101 - ■ DM23 - ■ ■ F1**	**P00**
	522	20	5.43	1 150	2.6	13	**2KJ3101 - ■ DM23 - ■ ■ E1**	**P00**
	602	18	4.71	1 110	2.8	13	**2KJ3101 - ■ DM23 - ■ ■ D1**	**P00**
	665	16	4.26	1 080	3.0	13	**2KJ3101 - ■ DM23 - ■ ■ C1**	**P00**
	707	15	4.01	1 070	3.1	13	**2KJ3101 - ■ DM23 - ■ ■ B1**	**P00**
	812	13	3.49	1 040	3.3	13	**2KJ3101 - ■ DM23 - ■ ■ A1**	**P00**
	E.89-LE90SM4P							
	147	71	9.67	8 000	3.9	46	**2KJ3004 - ■ EK23 - ■ ■ T1**	
	E.69-LE90SM4P							
	153	69	9.30	6 100	1.8	30	**2KJ3003 - ■ EK23 - ■ ■ S1**	
	169	62	8.45	6 100	1.7	30	**2KJ3003 - ■ EK23 - ■ ■ R1**	
	188	56	7.58	6 100	3.7	30	**2KJ3003 - ■ EK23 - ■ ■ Q1**	
	209	50	6.82	6 100	3.4	30	**2KJ3003 - ■ EK23 - ■ ■ P1**	

Article No. supplement		
Shaft design	**1 or 9**	➞ page 10/43
Frequency and voltage	**2 or 9**	➞ page 11/2
Gearbox mounting type	**A, B, F or H**	➞ page 10/37

© Siemens AG 2017

3

Selection and ordering data (continued)

P_{rated}	n_2	T_2	i	F_{R2}	f_B	m	Article No.	Order code
kW	rpm	Nm	-	N	-	kg	(Article No. supplement ➞ below)	No. of poles
1.1	**E.69-LE90SM4P**							
	231	46	6.17	6 100	4.5	30	**2KJ3003 - ■ EK23 - ■ ■ N1**	
	250	42	5.69	6 100	3.9	30	**2KJ3003 - ■ EK23 - ■ ■ M1**	
	E.49-LE90SM4P							
	147	72	9.70	4 000	1.2	23	**2KJ3002 - ■ EK23 - ■ ■ S1**	
	162	65	8.82	4 000	1.7	23	**2KJ3002 - ■ EK23 - ■ ■ R1**	
	190	55	7.50	4 000	1.9	23	**2KJ3002 - ■ EK23 - ■ ■ Q1**	
	209	50	6.82	4 000	2.1	23	**2KJ3002 - ■ EK23 - ■ ■ P1**	
	234	45	6.08	4 000	2.3	23	**2KJ3002 - ■ EK23 - ■ ■ N1**	
	261	40	5.45	4 000	2.6	23	**2KJ3002 - ■ EK23 - ■ ■ M1**	
	290	36	4.92	4 000	2.8	23	**2KJ3002 - ■ EK23 - ■ ■ L1**	
	314	34	4.54	4 000	3.0	23	**2KJ3002 - ■ EK23 - ■ ■ K1**	
	344	30	4.14	4 000	3.3	23	**2KJ3002 - ■ EK23 - ■ ■ J1**	
	414	25	3.44	4 000	4.0	23	**2KJ3002 - ■ EK23 - ■ ■ H1**	
	440	24	3.24	4 000	4.2	23	**2KJ3002 - ■ EK23 - ■ ■ G1**	
	466	23	3.06	4 000	4.5	23	**2KJ3002 - ■ EK23 - ■ ■ F1**	
	548	19	2.60	3 930	5.3	23	**2KJ3002 - ■ EK23 - ■ ■ E1**	
	E.39-LE90SM4P							
	218	48	6.55	3 000	0.83	19	**2KJ3001 - ■ EK23 - ■ ■ P1**	
	254	41	5.60	3 000	0.97	19	**2KJ3001 - ■ EK23 - ■ ■ N1**	
	280	38	5.09	3 000	1.1	19	**2KJ3001 - ■ EK23 - ■ ■ M1**	
	317	33	4.50	3 000	1.4	19	**2KJ3001 - ■ EK23 - ■ ■ L1**	
	348	30	4.09	3 000	1.6	19	**2KJ3001 - ■ EK23 - ■ ■ K1**	
	398	26	3.58	3 000	2.2	19	**2KJ3001 - ■ EK23 - ■ ■ J1**	
	431	24	3.31	3 000	2.4	19	**2KJ3001 - ■ EK23 - ■ ■ H1**	
	486	22	2.93	3 000	3.0	19	**2KJ3001 - ■ EK23 - ■ ■ G1**	
	584	18	2.44	2 940	3.6	19	**2KJ3001 - ■ EK23 - ■ ■ F1**	
	622	17	2.29	2 890	3.9	19	**2KJ3001 - ■ EK23 - ■ ■ E1**	
	692	15	2.06	2 790	4.3	19	**2KJ3001 - ■ EK23 - ■ ■ D1**	
	814	13	1.75	2 650	5.1	19	**2KJ3001 - ■ EK23 - ■ ■ C1**	
	950	11	1.50	2 530	5.5	19	**2KJ3001 - ■ EK23 - ■ ■ B1**	
	1 105	10	1.29	2 410	5.7	19	**2KJ3001 - ■ EK23 - ■ ■ A1**	
1.5	**D.149-LE100LLB6P**							
	3.0	4 850	328.38	52 700	1.6	275	**2KJ3212 - ■ FM23 - ■ ■ W1**	**P01**
	3.5	4 150	281.04	53 000	1.9	275	**2KJ3212 - ■ FM23 - ■ ■ V1**	**P01**
	3.7	3 900	264.51	53 100	2.0	275	**2KJ3212 - ■ FM23 - ■ ■ U1**	**P01**
	D.129-LE100LLB6P							
	2.6	5 500	373.00	26 700	0.91	191	**2KJ3211 - ■ FM23 - ■ ■ S1**	**P01**
	2.8	5 080	344.17	27 000	0.98	191	**2KJ3211 - ■ FM23 - ■ ■ R1**	**P01**
	3.1	4 680	316.90	27 200	1.1	191	**2KJ3211 - ■ FM23 - ■ ■ Q1**	**P01**
	3.6	3 990	270.24	27 600	1.3	191	**2KJ3211 - ■ FM23 - ■ ■ P1**	**P01**
	D.129-LE90ZLR4P							
	3.9	3 690	373.00	27 800	1.4	177	**2KJ3211 - ■ EM23 - ■ ■ S1**	
	4.2	3 410	344.17	28 000	1.5	177	**2KJ3211 - ■ EM23 - ■ ■ R1**	
	4.6	3 140	316.90	28 100	1.6	177	**2KJ3211 - ■ EM23 - ■ ■ Q1**	
	5.3	2 670	270.24	28 400	1.9	177	**2KJ3211 - ■ EM23 - ■ ■ P1**	
	5.7	2 520	254.34	28 500	2.0	177	**2KJ3211 - ■ EM23 - ■ ■ N1**	
	6.1	2 340	236.03	28 600	2.1	177	**2KJ3211 - ■ EM23 - ■ ■ M1**	
	D.109-LE100LLB6P							
	3.7	3 890	263.74	20 000	0.80	127	**2KJ3210 - ■ FM23 - ■ ■ Q1**	**P01**

Article No. supplement		
Shaft design	**1 or 9**	➞ page 10/43
Frequency and voltage	**2 or 9**	➞ page 11/2
Gearbox mounting type	**A, B, F or H**	➞ page 10/37

© Siemens AG 2017

Selection and ordering data (continued)

P_{rated}	n_2	T_2	i	F_{R2}	f_B	m	Article No.	Order code
kW	rpm	Nm	-	N	-	kg	(Article No. supplement ➞ below)	No. of poles
1.5	**D.109-LE90ZLR4P**							
	4.1	3 450	348.88	20 200	0.90	114	**2KJ3210 - ■ EM23 - ■ ■ T1**	
	4.6	3 120	314.98	20 200	0.99	114	**2KJ3210 - ■ EM23 - ■ ■ S1**	
	5.1	2 830	285.72	20 200	1.1	114	**2KJ3210 - ■ EM23 - ■ ■ R1**	
	5.5	2 610	263.74	20 200	1.2	114	**2KJ3210 - ■ EM23 - ■ ■ Q1**	
	6.0	2 370	239.75	20 200	1.3	114	**2KJ3210 - ■ EM23 - ■ ■ P1**	
	7.1	2 010	203.01	20 200	1.5	114	**2KJ3210 - ■ EM23 - ■ ■ N1**	
	7.6	1 890	191.07	20 200	1.6	114	**2KJ3210 - ■ EM23 - ■ ■ M1**	
	8.2	1 740	176.45	20 200	1.8	114	**2KJ3210 - ■ EM23 - ■ ■ L1**	
	9.2	1 550	157.00	20 200	2.0	114	**2KJ3210 - ■ EM23 - ■ ■ K1**	
	10.0	1 380	139.44	20 200	2.2	114	**2KJ3210 - ■ EM23 - ■ ■ J1**	
	D.89-LE90ZLR4P							
	7.0	2 040	206.62	18 300	0.82	72	**2KJ3208 - ■ EM23 - ■ ■ N1**	
	7.6	1 890	190.73	18 500	0.89	72	**2KJ3208 - ■ EM23 - ■ ■ M1**	
	8.3	1 730	174.71	18 500	0.97	72	**2KJ3208 - ■ EM23 - ■ ■ L1**	
	9.9	1 450	146.59	18 500	1.2	72	**2KJ3208 - ■ EM23 - ■ ■ K1**	
	10	1 360	137.97	18 500	1.2	72	**2KJ3208 - ■ EM23 - ■ ■ J1**	
	11	1 250	126.58	18 500	1.3	72	**2KJ3208 - ■ EM23 - ■ ■ H1**	
	13	1 090	110.57	18 500	1.5	72	**2KJ3208 - ■ EM23 - ■ ■ G1**	
	15	980	98.99	18 500	1.7	72	**2KJ3208 - ■ EM23 - ■ ■ F1**	
	17	855	86.56	18 500	2.0	72	**2KJ3208 - ■ EM23 - ■ ■ E1**	
	19	735	74.30	18 500	2.3	72	**2KJ3208 - ■ EM23 - ■ ■ D1**	
	D.79-LE90ZLR4P							
	14	1 030	104.03	11 000	0.81	49	**2KJ3207 - ■ EM23 - ■ ■ F1**	
	16	875	88.52	13 300	0.96	49	**2KJ3207 - ■ EM23 - ■ ■ E1**	
	19	750	75.83	13 500	1.1	49	**2KJ3207 - ■ EM23 - ■ ■ D1**	
	22	660	66.67	13 600	1.3	49	**2KJ3207 - ■ EM23 - ■ ■ C1**	
	Z.79-LE90ZLR4P							
	27	540	54.47	13 800	1.6	48	**2KJ3107 - ■ EM23 - ■ ■ A2**	
	29	490	49.52	13 800	1.7	48	**2KJ3107 - ■ EM23 - ■ ■ X1**	
	33	440	44.42	13 900	1.9	48	**2KJ3107 - ■ EM23 - ■ ■ W1**	
	36	395	39.94	14 000	2.1	48	**2KJ3107 - ■ EM23 - ■ ■ V1**	
	40	355	36.12	14 000	2.3	48	**2KJ3107 - ■ EM23 - ■ ■ U1**	
	43	330	33.34	14 000	2.5	48	**2KJ3107 - ■ EM23 - ■ ■ T1**	
	47	300	30.54	14 100	2.8	48	**2KJ3107 - ■ EM23 - ■ ■ S1**	
	D.69-LE90ZLR4P							
	20	725	73.22	10 700	0.83	37	**2KJ3206 - ■ EM23 - ■ ■ D1**	
	Z.69-LE90ZLR4P							
	24	600	60.97	11 000	0.99	37	**2KJ3106 - ■ EM23 - ■ ■ A2**	
	26	550	55.43	11 000	1.1	37	**2KJ3106 - ■ EM23 - ■ ■ X1**	
	31	465	47.14	11 200	1.3	37	**2KJ3106 - ■ EM23 - ■ ■ W1**	
	34	425	42.86	11 200	1.4	37	**2KJ3106 - ■ EM23 - ■ ■ V1**	
	38	375	38.24	11 300	1.6	37	**2KJ3106 - ■ EM23 - ■ ■ U1**	
	42	340	34.29	11 400	1.8	37	**2KJ3106 - ■ EM23 - ■ ■ T1**	
	47	305	30.90	11 400	2.0	37	**2KJ3106 - ■ EM23 - ■ ■ S1**	
	51	280	28.53	11 500	2.1	37	**2KJ3106 - ■ EM23 - ■ ■ R1**	
	55	255	26.04	11 500	2.3	37	**2KJ3106 - ■ EM23 - ■ ■ Q1**	
	67	210	21.61	11 600	2.8	37	**2KJ3106 - ■ EM23 - ■ ■ P1**	
	71	200	20.34	11 600	3.0	37	**2KJ3106 - ■ EM23 - ■ ■ N1**	
	75	190	19.21	11 600	3.2	37	**2KJ3106 - ■ EM23 - ■ ■ M1**	

Article No. supplement		
Shaft design	**1 or 9**	➞ page 10/43
Frequency and voltage	**2 or 9**	➞ page 11/2
Gearbox mounting type	**A, B, F or H**	➞ page 10/37

© Siemens AG 2017

3

Selection and ordering data (continued)

P_{rated}	n_2	T_2	i	F_{R2}	f_B	m	Article No.	Order code
kW	rpm	Nm	-	N	-	kg	(Article No. supplement ➞ below)	No. of poles
1.5	**Z.59-LE90ZLR4P**							
	25	565	56.99	7 210	0.80	32	**2KJ3105 - ■ EM23 - ■ ■ A2**	
	28	510	51.81	7 570	0.88	32	**2KJ3105 - ■ EM23 - ■ ■ X1**	
	33	435	44.06	7 400	1.0	32	**2KJ3105 - ■ EM23 - ■ ■ W1**	
	36	395	40.06	7 270	1.1	32	**2KJ3105 - ■ EM23 - ■ ■ V1**	
	40	350	35.74	7 120	1.3	32	**2KJ3105 - ■ EM23 - ■ ■ U1**	
	45	315	32.05	6 950	1.4	32	**2KJ3105 - ■ EM23 - ■ ■ T1**	
	50	285	28.89	6 790	1.6	32	**2KJ3105 - ■ EM23 - ■ ■ S1**	
	54	260	26.66	6 680	1.7	32	**2KJ3105 - ■ EM23 - ■ ■ R1**	
	59	240	24.34	6 530	1.9	32	**2KJ3105 - ■ EM23 - ■ ■ Q1**	
	72	200	20.20	6 240	2.2	32	**2KJ3105 - ■ EM23 - ■ ■ P1**	
	76	188	19.01	6 140	2.4	32	**2KJ3105 - ■ EM23 - ■ ■ N1**	
	81	178	17.95	6 050	2.5	32	**2KJ3105 - ■ EM23 - ■ ■ M1**	
	95	151	15.27	5 800	3.0	32	**2KJ3105 - ■ EM23 - ■ ■ L1**	
	110	130	13.09	5 560	3.5	32	**2KJ3105 - ■ EM23 - ■ ■ K1**	
	Z.49-LE90ZLR4P							
	36	400	40.31	5 300	0.80	30	**2KJ3104 - ■ EM23 - ■ ■ X1**	
	39	360	36.65	5 650	0.88	30	**2KJ3104 - ■ EM23 - ■ ■ W1**	
	44	320	32.70	5 550	0.99	30	**2KJ3104 - ■ EM23 - ■ ■ V1**	
	49	290	29.32	5 070	1.1	30	**2KJ3104 - ■ EM23 - ■ ■ U1**	
	55	260	26.43	5 320	1.2	30	**2KJ3104 - ■ EM23 - ■ ■ T1**	
	59	240	24.39	5 230	1.3	30	**2KJ3104 - ■ EM23 - ■ ■ S1**	
	65	220	22.27	5 120	1.4	30	**2KJ3104 - ■ EM23 - ■ ■ R1**	
	78	183	18.48	4 910	1.7	30	**2KJ3104 - ■ EM23 - ■ ■ Q1**	
	83	172	17.39	4 840	1.9	30	**2KJ3104 - ■ EM23 - ■ ■ P1**	
	88	163	16.42	4 770	2.0	30	**2KJ3104 - ■ EM23 - ■ ■ N1**	
	103	139	13.98	4 580	2.3	30	**2KJ3104 - ■ EM23 - ■ ■ M1**	
	121	119	11.97	4 400	2.7	30	**2KJ3104 - ■ EM23 - ■ ■ L1**	
	137	104	10.53	4 260	3.1	30	**2KJ3104 - ■ EM23 - ■ ■ K1**	
	163	88	8.88	4 060	3.6	30	**2KJ3104 - ■ EM23 - ■ ■ J1**	
	187	77	7.74	3 910	4.2	30	**2KJ3104 - ■ EM23 - ■ ■ H1**	
	189	76	7.64	3 870	3.9	30	**2KJ3104 - ■ EM23 - ■ ■ G1**	
	200	72	7.21	3 800	4.1	30	**2KJ3104 - ■ EM23 - ■ ■ F1**	
	235	61	6.14	3 640	4.4	30	**2KJ3104 - ■ EM23 - ■ ■ E1**	
	275	52	5.26	3 480	4.7	30	**2KJ3104 - ■ EM23 - ■ ■ D1**	
	313	46	4.62	3 350	4.9	30	**2KJ3104 - ■ EM23 - ■ ■ C1**	
	371	39	3.90	3 180	5.3	30	**2KJ3104 - ■ EM23 - ■ ■ B1**	
	Z.49-LE90SM2P							
	156	92	18.48	4 110	3.5	27	**2KJ3104 - ■ EK23 - ■ ■ Q1**	**P00**
	166	86	17.39	4 040	3.7	27	**2KJ3104 - ■ EK23 - ■ ■ P1**	**P00**
	176	82	16.42	3 970	3.9	27	**2KJ3104 - ■ EK23 - ■ ■ N1**	**P00**
	Z.39-LE90ZLR4P							
	58	245	24.82	1 420	0.81	21	**2KJ3103 - ■ EM23 - ■ ■ R1**	
	66	215	21.74	1 840	0.93	21	**2KJ3103 - ■ EM23 - ■ ■ Q1**	
	72	199	20.07	2 050	1.0	21	**2KJ3103 - ■ EM23 - ■ ■ P1**	
	81	176	17.77	2 350	1.1	21	**2KJ3103 - ■ EM23 - ■ ■ N1**	
	98	147	14.79	2 670	1.3	21	**2KJ3103 - ■ EM23 - ■ ■ M1**	
	104	138	13.92	2 770	1.4	21	**2KJ3103 - ■ EM23 - ■ ■ L1**	
	116	124	12.47	2 890	1.5	21	**2KJ3103 - ■ EM23 - ■ ■ K1**	

Article No. supplement		
Shaft design	**1 or 9**	➞ page 10/43
Frequency and voltage	**2 or 9**	➞ page 11/2
Gearbox mounting type	**A, B, F or H**	➞ page 10/37

© Siemens AG 2017

Selection and ordering data (continued)

P_{rated}	n_2	T_2	i	F_{R2}	f_B	m	Article No.	Order code
kW	rpm	Nm	-	N	-	kg	(Article No. supplement ➞ below)	No. of poles
1.5	**Z.39-LE90ZLR4P**							
	136	105	10.62	3 060	1.6	21	**2KJ3103 - ■ EM23 - ■ ■ J1**	
	159	90	9.10	3 150	1.8	21	**2KJ3103 - ■ EM23 - ■ ■ H1**	
	184	78	7.84	3 180	1.9	21	**2KJ3103 - ■ EM23 - ■ ■ G1**	
	224	64	6.46	2 810	2.3	21	**2KJ3103 - ■ EM23 - ■ ■ F1**	
	238	60	6.08	2 840	2.4	21	**2KJ3103 - ■ EM23 - ■ ■ E1**	
	265	54	5.45	2 850	2.6	21	**2KJ3103 - ■ EM23 - ■ ■ D1**	
	311	46	4.64	2 870	2.8	21	**2KJ3103 - ■ EM23 - ■ ■ C1**	
	363	40	3.98	2 840	3.1	21	**2KJ3103 - ■ EM23 - ■ ■ B1**	
	421	34	3.43	2 830	3.3	21	**2KJ3103 - ■ EM23 - ■ ■ A1**	
	Z.39-LE90SM2P							
	162	88	17.77	3 160	2.3	18	**2KJ3103 - ■ EK23 - ■ ■ N1**	**P00**
	195	73	14.79	3 210	2.6	18	**2KJ3103 - ■ EK23 - ■ ■ M1**	**P00**
	207	69	13.92	3 210	2.7	18	**2KJ3103 - ■ EK23 - ■ ■ L1**	**P00**
	231	62	12.47	3 210	2.9	18	**2KJ3103 - ■ EK23 - ■ ■ K1**	**P00**
	272	53	10.62	3 180	3.2	18	**2KJ3103 - ■ EK23 - ■ ■ J1**	**P00**
	317	45	9.10	3 150	3.5	18	**2KJ3103 - ■ EK23 - ■ ■ H1**	**P00**
	368	39	7.84	3 020	3.8	18	**2KJ3103 - ■ EK23 - ■ ■ G1**	**P00**
	447	32	6.46	2 820	4.6	18	**2KJ3103 - ■ EK23 - ■ ■ F1**	**P00**
	475	30	6.08	2 800	4.9	18	**2KJ3103 - ■ EK23 - ■ ■ E1**	**P00**
	529	27	5.45	2 710	5.2	18	**2KJ3103 - ■ EK23 - ■ ■ D1**	**P00**
	622	23	4.64	2 580	5.6	18	**2KJ3103 - ■ EK23 - ■ ■ C1**	**P00**
	725	20	3.98	2 460	6.1	18	**2KJ3103 - ■ EK23 - ■ ■ B1**	**P00**
	Z.29-LE90ZLR4P							
	82	175	17.67	1 170	0.80	20	**2KJ3102 - ■ EM23 - ■ ■ R1**	
	92	156	15.75	1 450	0.90	20	**2KJ3102 - ■ EM23 - ■ ■ Q1**	
	99	144	14.54	1 620	0.83	20	**2KJ3102 - ■ EM23 - ■ ■ P1**	
	114	126	12.73	1 860	1.1	20	**2KJ3102 - ■ EM23 - ■ ■ N1**	
	129	111	11.16	2 040	1.3	20	**2KJ3102 - ■ EM23 - ■ ■ M1**	
	143	100	10.12	2 170	1.4	20	**2KJ3102 - ■ EM23 - ■ ■ L1**	
	152	94	9.53	2 230	1.5	20	**2KJ3102 - ■ EM23 - ■ ■ K1**	
	172	83	8.40	2 330	1.7	20	**2KJ3102 - ■ EM23 - ■ ■ J1**	
	198	72	7.29	2 370	1.8	20	**2KJ3102 - ■ EM23 - ■ ■ H1**	
	209	69	6.92	2 100	1.1	20	**2KJ3102 - ■ EM23 - ■ ■ G1**	
	238	60	6.06	2 190	1.7	20	**2KJ3102 - ■ EM23 - ■ ■ F1**	
	272	53	5.31	2 130	1.7	20	**2KJ3102 - ■ EM23 - ■ ■ E1**	
	300	48	4.82	2 090	1.8	20	**2KJ3102 - ■ EM23 - ■ ■ D1**	
	318	45	4.54	2 060	1.9	20	**2KJ3102 - ■ EM23 - ■ ■ C1**	
	361	40	4.00	1 990	1.9	20	**2KJ3102 - ■ EM23 - ■ ■ B1**	
	416	34	3.47	1 930	2.0	20	**2KJ3102 - ■ EM23 - ■ ■ A1**	
	Z.29-LE90SM2P							
	163	88	17.67	2 280	1.6	17	**2KJ3102 - ■ EK23 - ■ ■ R1**	**P00**
	183	78	15.75	2 370	1.8	17	**2KJ3102 - ■ EK23 - ■ ■ Q1**	**P00**
	198	72	14.54	2 370	1.7	17	**2KJ3102 - ■ EK23 - ■ ■ P1**	**P00**
	227	63	12.73	2 300	2.2	17	**2KJ3102 - ■ EK23 - ■ ■ N1**	**P00**
	259	55	11.16	2 230	2.5	17	**2KJ3102 - ■ EK23 - ■ ■ M1**	**P00**
	285	50	10.12	2 180	2.8	17	**2KJ3102 - ■ EK23 - ■ ■ L1**	**P00**
	303	47	9.53	2 150	3.0	17	**2KJ3102 - ■ EK23 - ■ ■ K1**	**P00**
	343	42	8.40	2 080	3.3	17	**2KJ3102 - ■ EK23 - ■ ■ J1**	**P00**

Article No. supplement		
Shaft design	**1 or 9**	➞ page 10/43
Frequency and voltage	**2 or 9**	➞ page 11/2
Gearbox mounting type	**A, B, F or H**	➞ page 10/37

© Siemens AG 2017

3

Selection and ordering data (continued)

P_{rated}	n_2	T_2	i	F_{R2}	f_B	m	Article No.	Order code
kW	rpm	Nm	-	N	-	kg	(Article No. supplement ➞ below)	No. of poles
1.5	**Z.29-LE90SM2P**							
	396	36	7.29	2 000	3.6	17	**2KJ3102 - ■ EK23 - ■ ■ H1**	**P00**
	417	34	6.92	1 930	2.2	17	**2KJ3102 - ■ EK23 - ■ ■ G1**	**P00**
	476	30	6.06	1 860	3.3	17	**2KJ3102 - ■ EK23 - ■ ■ F1**	**P00**
	543	26	5.31	1 800	3.5	17	**2KJ3102 - ■ EK23 - ■ ■ E1**	**P00**
	599	24	4.82	1 750	3.6	17	**2KJ3102 - ■ EK23 - ■ ■ D1**	**P00**
	635	22	4.54	1 730	3.7	17	**2KJ3102 - ■ EK23 - ■ ■ C1**	**P00**
	721	20	4.00	1 670	3.8	17	**2KJ3102 - ■ EK23 - ■ ■ B1**	**P00**
	831	17	3.47	1 600	4.1	17	**2KJ3102 - ■ EK23 - ■ ■ A1**	**P00**
	E.89-LE90ZLR4P							
	149	96	9.67	8 000	2.9	49	**2KJ3004 - ■ EM23 - ■ ■ T1**	
	166	86	8.73	8 000	3.2	49	**2KJ3004 - ■ EM23 - ■ ■ S1**	
	182	78	7.92	8 000	3.6	49	**2KJ3004 - ■ EM23 - ■ ■ R1**	
	198	72	7.31	8 000	3.6	49	**2KJ3004 - ■ EM23 - ■ ■ Q1**	
	218	66	6.64	8 000	3.9	49	**2KJ3004 - ■ EM23 - ■ ■ P1**	
	273	52	5.29	8 000	4.0	49	**2KJ3004 - ■ EM23 - ■ ■ M1**	
	E.69-LE90ZLR4P							
	155	92	9.30	6 100	1.3	33	**2KJ3003 - ■ EM23 - ■ ■ S1**	
	171	84	8.45	6 100	1.3	33	**2KJ3003 - ■ EM23 - ■ ■ R1**	
	191	75	7.58	6 100	2.7	33	**2KJ3003 - ■ EM23 - ■ ■ Q1**	
	212	68	6.82	6 100	2.5	33	**2KJ3003 - ■ EM23 - ■ ■ P1**	
	234	61	6.17	6 100	3.4	33	**2KJ3003 - ■ EM23 - ■ ■ N1**	
	254	56	5.69	6 100	2.9	33	**2KJ3003 - ■ EM23 - ■ ■ M1**	
	277	52	5.21	6 100	3.9	33	**2KJ3003 - ■ EM23 - ■ ■ L1**	
	330	43	4.38	6 100	4.6	33	**2KJ3003 - ■ EM23 - ■ ■ K1**	
	351	41	4.12	6 100	4.0	33	**2KJ3003 - ■ EM23 - ■ ■ J1**	
	382	38	3.78	6 100	5.3	33	**2KJ3003 - ■ EM23 - ■ ■ H1**	
	E.49-LE90ZLR4P							
	149	96	9.70	4 000	0.89	26	**2KJ3002 - ■ EM23 - ■ ■ S1**	
	164	87	8.82	4 000	1.2	26	**2KJ3002 - ■ EM23 - ■ ■ R1**	
	193	74	7.50	4 000	1.4	26	**2KJ3002 - ■ EM23 - ■ ■ Q1**	
	212	68	6.82	4 000	1.5	26	**2KJ3002 - ■ EM23 - ■ ■ P1**	
	238	60	6.08	4 000	1.7	26	**2KJ3002 - ■ EM23 - ■ ■ N1**	
	265	54	5.45	4 000	1.9	26	**2KJ3002 - ■ EM23 - ■ ■ M1**	
	294	49	4.92	4 000	2.1	26	**2KJ3002 - ■ EM23 - ■ ■ L1**	
	318	45	4.54	4 000	2.3	26	**2KJ3002 - ■ EM23 - ■ ■ K1**	
	349	41	4.14	4 000	2.5	26	**2KJ3002 - ■ EM23 - ■ ■ J1**	
	420	34	3.44	4 000	3.0	26	**2KJ3002 - ■ EM23 - ■ ■ H1**	
	446	32	3.24	4 000	3.1	26	**2KJ3002 - ■ EM23 - ■ ■ G1**	
	472	30	3.06	4 000	3.3	26	**2KJ3002 - ■ EM23 - ■ ■ F1**	
	556	26	2.60	3 860	4.0	26	**2KJ3002 - ■ EM23 - ■ ■ E1**	
	648	22	2.23	3 690	4.6	26	**2KJ3002 - ■ EM23 - ■ ■ D1**	
	737	19	1.96	3 540	5.3	26	**2KJ3002 - ■ EM23 - ■ ■ C1**	
	876	16	1.65	3 360	6.3	26	**2KJ3002 - ■ EM23 - ■ ■ B1**	
	E.39-LE90ZLR4P							
	321	45	4.50	3 000	1.1	22	**2KJ3001 - ■ EM23 - ■ ■ L1**	
	353	40	4.09	3 000	1.2	22	**2KJ3001 - ■ EM23 - ■ ■ K1**	
	404	36	3.58	3 000	1.6	22	**2KJ3001 - ■ EM23 - ■ ■ J1**	
	437	33	3.31	3 000	1.8	22	**2KJ3001 - ■ EM23 - ■ ■ H1**	

Article No. supplement		
Shaft design	**1 or 9**	➞ page 10/43
Frequency and voltage	**2 or 9**	➞ page 11/2
Gearbox mounting type	**A, B, F or H**	➞ page 10/37

© Siemens AG 2017

Selection and ordering data (continued)

P_{rated} kW	n_2 rpm	T_2 Nm	i -	F_{R2} N	f_B -	m kg	Article No. (Article No. supplement ➞ below)	Order code No. of poles
1.5	**E.39-LE90ZLR4P**							
	493	29	2.93	3 000	2.2	22	**2KJ3001 - ■ EM23 - ■ ■ G1**	
	592	24	2.44	2 870	2.7	22	**2KJ3001 - ■ EM23 - ■ ■ F1**	
	631	23	2.29	2 820	2.9	22	**2KJ3001 - ■ EM23 - ■ ■ E1**	
	701	20	2.06	2 730	3.2	22	**2KJ3001 - ■ EM23 - ■ ■ D1**	
	826	17	1.75	2 600	3.8	22	**2KJ3001 - ■ EM23 - ■ ■ C1**	
	963	15	1.50	2 480	4.1	22	**2KJ3001 - ■ EM23 - ■ ■ B1**	
	1 120	13	1.29	2 370	4.2	22	**2KJ3001 - ■ EM23 - ■ ■ A1**	
2.2	**D.169-LE112ZMKB6P**							
	3.0	7 080	327.18	72 700	2.0	458	**2KJ3213 - ■ GJ23 - ■ ■ V1**	**P01**
	D.149-LE112ZMKB6P							
	3.0	7 110	328.38	51 600	1.1	280	**2KJ3212 - ■ GJ23 - ■ ■ W1**	**P01**
	3.5	6 080	281.04	52 100	1.3	280	**2KJ3212 - ■ GJ23 - ■ ■ V1**	**P01**
	3.7	5 720	264.51	52 300	1.4	280	**2KJ3212 - ■ GJ23 - ■ ■ U1**	**P01**
	3.9	5 370	247.95	52 400	1.5	280	**2KJ3212 - ■ GJ23 - ■ ■ T1**	**P01**
	D.149-LE100ZLSA4P							
	4.5	4 700	328.38	52 700	1.7	278	**2KJ3212 - ■ FN23 - ■ ■ W1**	
	5.2	4 030	281.04	53 100	2.0	278	**2KJ3212 - ■ FN23 - ■ ■ V1**	
	5.5	3 790	264.51	53 200	2.1	278	**2KJ3212 - ■ FN23 - ■ ■ U1**	
	D.129-LE112ZMKB6P							
	3.6	5 850	270.24	26 500	0.85	194	**2KJ3211 - ■ GJ23 - ■ ■ P1**	**P01**
	D.129-LE100ZLSA4P							
	3.9	5 340	373.00	26 800	0.93	194	**2KJ3211 - ■ FN23 - ■ ■ S1**	
	4.3	4 930	344.17	27 100	1.0	194	**2KJ3211 - ■ FN23 - ■ ■ R1**	
	4.6	4 540	316.90	27 300	1.1	194	**2KJ3211 - ■ FN23 - ■ ■ Q1**	
	5.4	3 870	270.24	27 700	1.3	194	**2KJ3211 - ■ FN23 - ■ ■ P1**	
	5.8	3 640	254.34	27 800	1.4	194	**2KJ3211 - ■ FN23 - ■ ■ N1**	
	6.2	3 380	236.03	28 000	1.5	194	**2KJ3211 - ■ FN23 - ■ ■ M1**	
	7.0	2 990	208.67	28 200	1.7	194	**2KJ3211 - ■ FN23 - ■ ■ L1**	
	7.9	2 670	186.28	28 400	1.9	194	**2KJ3211 - ■ FN23 - ■ ■ K1**	
	8.7	2 400	167.63	28 500	2.1	194	**2KJ3211 - ■ FN23 - ■ ■ J1**	
	D.109-LE100ZLSA4P							
	5.6	3 780	263.74	20 100	0.82	130	**2KJ3210 - ■ FN23 - ■ ■ Q1**	
	6.1	3 430	239.75	20 200	0.90	130	**2KJ3210 - ■ FN23 - ■ ■ P1**	
	7.2	2 910	203.01	20 200	1.1	130	**2KJ3210 - ■ FN23 - ■ ■ N1**	
	7.7	2 740	191.07	20 200	1.1	130	**2KJ3210 - ■ FN23 - ■ ■ M1**	
	8.3	2 530	176.45	20 200	1.2	130	**2KJ3210 - ■ FN23 - ■ ■ L1**	
	9.3	2 250	157.00	20 200	1.4	130	**2KJ3210 - ■ FN23 - ■ ■ K1**	
	11	2 000	139.44	20 200	1.6	130	**2KJ3210 - ■ FN23 - ■ ■ J1**	
	12	1 790	124.82	20 200	1.7	130	**2KJ3210 - ■ FN23 - ■ ■ H1**	
	14	1 530	106.70	20 200	2.0	130	**2KJ3210 - ■ FN23 - ■ ■ G1**	
	D.89-LE100ZLSA4P							
	10	2 100	146.59	17 900	0.80	88	**2KJ3208 - ■ FN23 - ■ ■ K1**	
	11	1 970	137.97	18 500	0.85	88	**2KJ3208 - ■ FN23 - ■ ■ J1**	
	12	1 810	126.58	18 500	0.93	88	**2KJ3208 - ■ FN23 - ■ ■ H1**	
	13	1 580	110.57	18 500	1.1	88	**2KJ3208 - ■ FN23 - ■ ■ G1**	
	15	1 420	98.99	18 500	1.2	88	**2KJ3208 - ■ FN23 - ■ ■ F1**	
	17	1 240	86.56	18 500	1.4	88	**2KJ3208 - ■ FN23 - ■ ■ E1**	
	20	1 060	74.30	18 500	1.6	88	**2KJ3208 - ■ FN23 - ■ ■ D1**	
	22	940	65.67	18 500	1.8	88	**2KJ3208 - ■ FN23 - ■ ■ C1**	

Article No. supplement		
Shaft design	**1 or 9**	➞ page 10/43
Frequency and voltage	**2 or 9**	➞ page 11/2
Gearbox mounting type	**A, B, F or H**	➞ page 10/37

© Siemens AG 2017

3

Selection and ordering data (continued)

P_{rated}	n_2	T_2	i	F_{R2}	f_B	m	Article No.	Order code
kW	rpm	Nm	-	N	-	kg	(Article No. supplement ➞ below)	No. of poles
2.2	**Z.89-LE100ZLSA4P**							
	26	820	57.36	18 500	2.0	87	**2KJ3108 - ■ FN23 - ■ ■ A2**	
	28	740	51.78	18 500	2.3	87	**2KJ3108 - ■ FN23 - ■ ■ X1**	
	31	670	46.97	18 500	2.5	87	**2KJ3108 - ■ FN23 - ■ ■ W1**	
	D.79-LE100ZLSA4P							
	22	955	66.67	12 200	0.88	65	**2KJ3207 - ■ FN23 - ■ ■ C1**	
	26	805	56.25	13 400	1.0	65	**2KJ3207 - ■ FN23 - ■ ■ B1**	
	30	700	49.02	13 600	1.2	65	**2KJ3207 - ■ FN23 - ■ ■ A1**	
	Z.79-LE100ZLSA4P							
	33	635	44.42	13 600	1.3	64	**2KJ3107 - ■ FN23 - ■ ■ W1**	
	37	570	39.94	13 700	1.5	64	**2KJ3107 - ■ FN23 - ■ ■ V1**	
	41	515	36.12	13 800	1.6	64	**2KJ3107 - ■ FN23 - ■ ■ U1**	
	44	475	33.34	13 900	1.8	64	**2KJ3107 - ■ FN23 - ■ ■ T1**	
	48	435	30.54	13 900	1.9	64	**2KJ3107 - ■ FN23 - ■ ■ S1**	
	57	365	25.62	14 000	2.3	64	**2KJ3107 - ■ FN23 - ■ ■ R1**	
	61	345	24.12	14 000	2.4	64	**2KJ3107 - ■ FN23 - ■ ■ Q1**	
	66	315	22.13	14 100	2.6	64	**2KJ3107 - ■ FN23 - ■ ■ P1**	
	76	275	19.33	13 600	3.0	64	**2KJ3107 - ■ FN23 - ■ ■ N1**	
	D.69-LE100ZLSA4P							
	32	660	46.01	10 800	0.91	55	**2KJ3206 - ■ FN23 - ■ ■ A1**	
	Z.69-LE100ZLSA4P							
	38	545	38.24	11 100	1.1	55	**2KJ3106 - ■ FN23 - ■ ■ U1**	
	43	490	34.29	11 100	1.2	55	**2KJ3106 - ■ FN23 - ■ ■ T1**	
	47	440	30.90	11 200	1.4	55	**2KJ3106 - ■ FN23 - ■ ■ S1**	
	51	405	28.53	11 300	1.5	55	**2KJ3106 - ■ FN23 - ■ ■ R1**	
	56	370	26.04	11 300	1.6	55	**2KJ3106 - ■ FN23 - ■ ■ Q1**	
	68	310	21.61	11 400	1.9	55	**2KJ3106 - ■ FN23 - ■ ■ P1**	
	72	290	20.34	11 400	2.1	55	**2KJ3106 - ■ FN23 - ■ ■ N1**	
	76	275	19.21	11 500	2.2	55	**2KJ3106 - ■ FN23 - ■ ■ M1**	
	90	230	16.34	11 000	2.6	55	**2KJ3106 - ■ FN23 - ■ ■ L1**	
	105	200	14.00	10 500	3.0	55	**2KJ3106 - ■ FN23 - ■ ■ K1**	
	119	177	12.31	10 100	3.4	55	**2KJ3106 - ■ FN23 - ■ ■ J1**	
	172	122	8.50	9 070	3.7	55	**2KJ3106 - ■ FN23 - ■ ■ F1**	
	203	104	7.23	8 630	4.3	55	**2KJ3106 - ■ FN23 - ■ ■ E1**	
	Z.59-LE100ZLSA4P							
	41	510	35.74	6 450	0.88	50	**2KJ3105 - ■ FN23 - ■ ■ U1**	
	46	460	32.05	5 980	0.98	50	**2KJ3105 - ■ FN23 - ■ ■ T1**	
	51	410	28.89	6 260	1.1	50	**2KJ3105 - ■ FN23 - ■ ■ S1**	
	55	380	26.66	6 170	1.2	50	**2KJ3105 - ■ FN23 - ■ ■ R1**	
	60	345	24.34	6 080	1.3	50	**2KJ3105 - ■ FN23 - ■ ■ Q1**	
	73	290	20.20	5 850	1.6	50	**2KJ3105 - ■ FN23 - ■ ■ P1**	
	77	270	19.01	5 790	1.7	50	**2KJ3105 - ■ FN23 - ■ ■ N1**	
	82	255	17.95	5 720	1.7	50	**2KJ3105 - ■ FN23 - ■ ■ M1**	
	96	215	15.27	5 520	2.1	50	**2KJ3105 - ■ FN23 - ■ ■ L1**	
	112	188	13.09	5 310	2.4	50	**2KJ3105 - ■ FN23 - ■ ■ K1**	
	127	165	11.51	5 140	2.7	50	**2KJ3105 - ■ FN23 - ■ ■ J1**	
	151	139	9.71	4 930	3.2	50	**2KJ3105 - ■ FN23 - ■ ■ H1**	
	173	121	8.46	4 750	3.7	50	**2KJ3105 - ■ FN23 - ■ ■ G1**	
	182	116	8.07	4 660	3.5	50	**2KJ3105 - ■ FN23 - ■ ■ F1**	
	214	98	6.86	4 470	4.2	50	**2KJ3105 - ■ FN23 - ■ ■ E1**	

Article No. supplement		
Shaft design	**1 or 9**	➞ page 10/43
Frequency and voltage	**2 or 9**	➞ page 11/2
Gearbox mounting type	**A, B, F or H**	➞ page 10/37

© Siemens AG 2017

Selection and ordering data (continued)

P_{rated}	n_2	T_2	i	F_{R2}	f_B	m	Article No.	Order code
kW	rpm	Nm	-	N	-	kg	(Article No. supplement ➞ below)	No. of poles
2.2	**Z.59-LE90ZLR2P**							
	152	138	19.01	4 920	3.3	32	**2KJ3105 - ■ EM23 - ■ ■ N1**	**P00**
	161	130	17.95	4 850	3.4	32	**2KJ3105 - ■ EM23 - ■ ■ M1**	**P00**
	189	111	15.27	4 640	4.1	32	**2KJ3105 - ■ EM23 - ■ ■ L1**	**P00**
	Z.49-LE100ZLSA4P							
	55	375	26.43	4 830	0.84	48	**2KJ3104 - ■ FN23 - ■ ■ T1**	
	60	350	24.39	4 770	0.91	48	**2KJ3104 - ■ FN23 - ■ ■ S1**	
	66	315	22.27	4 720	1.0	48	**2KJ3104 - ■ FN23 - ■ ■ R1**	
	79	265	18.48	4 560	1.2	48	**2KJ3104 - ■ FN23 - ■ ■ Q1**	
	84	245	17.39	4 170	1.3	48	**2KJ3104 - ■ FN23 - ■ ■ P1**	
	89	235	16.42	4 230	1.4	48	**2KJ3104 - ■ FN23 - ■ ■ N1**	
	105	200	13.98	4 320	1.6	48	**2KJ3104 - ■ FN23 - ■ ■ M1**	
	122	172	11.97	4 170	1.9	48	**2KJ3104 - ■ FN23 - ■ ■ L1**	
	139	151	10.53	4 050	2.1	48	**2KJ3104 - ■ FN23 - ■ ■ K1**	
	165	127	8.88	3 890	2.5	48	**2KJ3104 - ■ FN23 - ■ ■ J1**	
	189	111	7.74	3 750	2.9	48	**2KJ3104 - ■ FN23 - ■ ■ H1**	
	192	110	7.64	3 700	2.7	48	**2KJ3104 - ■ FN23 - ■ ■ G1**	
	203	103	7.21	3 650	2.8	48	**2KJ3104 - ■ FN23 - ■ ■ F1**	
	239	88	6.14	3 500	3.0	48	**2KJ3104 - ■ FN23 - ■ ■ E1**	
	279	75	5.26	3 360	3.2	48	**2KJ3104 - ■ FN23 - ■ ■ D1**	
	317	66	4.62	3 250	3.4	48	**2KJ3104 - ■ FN23 - ■ ■ C1**	
	376	56	3.90	3 090	3.7	48	**2KJ3104 - ■ FN23 - ■ ■ B1**	
	431	49	3.40	2 970	3.9	48	**2KJ3104 - ■ FN23 - ■ ■ A1**	
	Z.49-LE90ZLR2P							
	156	134	18.48	3 940	2.4	30	**2KJ3104 - ■ EM23 - ■ ■ Q1**	**P00**
	166	126	17.39	3 880	2.5	30	**2KJ3104 - ■ EM23 - ■ ■ P1**	**P00**
	176	119	16.42	3 830	2.7	30	**2KJ3104 - ■ EM23 - ■ ■ N1**	**P00**
	207	102	13.98	3 670	3.1	30	**2KJ3104 - ■ EM23 - ■ ■ M1**	**P00**
	241	87	11.97	3 520	3.7	30	**2KJ3104 - ■ EM23 - ■ ■ L1**	**P00**
	274	77	10.53	3 400	4.2	30	**2KJ3104 - ■ EM23 - ■ ■ K1**	**P00**
	325	65	8.88	3 240	5.0	30	**2KJ3104 - ■ EM23 - ■ ■ J1**	**P00**
	378	56	7.64	3 090	5.3	30	**2KJ3104 - ■ EM23 - ■ ■ G1**	**P00**
	Z.39-LE100ZLSA4P							
	99	210	14.79	1 070	0.91	36	**2KJ3103 - ■ FN23 - ■ ■ M1**	
	105	200	13.92	1 190	0.95	36	**2KJ3103 - ■ FN23 - ■ ■ L1**	
	117	179	12.47	1 490	1.0	36	**2KJ3103 - ■ FN23 - ■ ■ K1**	
	138	152	10.62	1 860	1.1	36	**2KJ3103 - ■ FN23 - ■ ■ J1**	
	161	131	9.10	2 100	1.2	36	**2KJ3103 - ■ FN23 - ■ ■ H1**	
	187	112	7.84	2 310	1.3	36	**2KJ3103 - ■ FN23 - ■ ■ G1**	
	227	93	6.46	1 880	1.6	36	**2KJ3103 - ■ FN23 - ■ ■ F1**	
	241	87	6.08	1 970	1.7	36	**2KJ3103 - ■ FN23 - ■ ■ E1**	
	269	78	5.45	2 080	1.8	36	**2KJ3103 - ■ FN23 - ■ ■ D1**	
	316	66	4.64	2 220	2.0	36	**2KJ3103 - ■ FN23 - ■ ■ C1**	
	368	57	3.98	2 290	2.1	36	**2KJ3103 - ■ FN23 - ■ ■ B1**	
	427	49	3.43	2 340	2.3	36	**2KJ3103 - ■ FN23 - ■ ■ A1**	
	Z.39-LE90ZLR2P							
	163	129	17.77	2 130	1.5	21	**2KJ3103 - ■ EM23 - ■ ■ N1**	**P00**
	195	108	14.79	2 330	1.8	21	**2KJ3103 - ■ EM23 - ■ ■ M1**	**P00**
	208	101	13.92	2 410	1.9	21	**2KJ3103 - ■ EM23 - ■ ■ L1**	**P00**

Article No. supplement		
Shaft design	**1 or 9**	➞ page 10/43
Frequency and voltage	**2 or 9**	➞ page 11/2
Gearbox mounting type	**A, B, F or H**	➞ page 10/37

© Siemens AG 2017

3

Selection and ordering data (continued)

P_{rated}	n_2	T_2	i	F_{R2}	f_B	m	Article No.	Order code
kW	rpm	Nm	-	N	-	kg	(Article No. supplement ➞ below)	No. of poles
2.2	**Z.39-LE90ZLR2P**							
	232	91	12.47	2 480	2.0	21	**2KJ3103 - ■ EM23 - ■ ■ K1**	**P00**
	272	77	10.62	2 580	2.2	21	**2KJ3103 - ■ EM23 - ■ ■ J1**	**P00**
	318	66	9.10	2 630	2.4	21	**2KJ3103 - ■ EM23 - ■ ■ H1**	**P00**
	369	57	7.84	2 650	2.6	21	**2KJ3103 - ■ EM23 - ■ ■ G1**	**P00**
	447	47	6.46	2 350	3.1	21	**2KJ3103 - ■ EM23 - ■ ■ F1**	**P00**
	475	44	6.08	2 360	3.3	21	**2KJ3103 - ■ EM23 - ■ ■ E1**	**P00**
	530	40	5.45	2 350	3.5	21	**2KJ3103 - ■ EM23 - ■ ■ D1**	**P00**
	623	34	4.64	2 350	3.9	21	**2KJ3103 - ■ EM23 - ■ ■ C1**	**P00**
	726	29	3.98	2 340	4.2	21	**2KJ3103 - ■ EM23 - ■ ■ B1**	**P00**
	843	25	3.43	2 310	4.5	21	**2KJ3103 - ■ EM23 - ■ ■ A1**	**P00**
	Z.29-LE100ZLSA4P							
	131	160	11.16	715	0.87	34	**2KJ3102 - ■ FN23 - ■ ■ M1**	
	145	145	10.12	955	0.96	34	**2KJ3102 - ■ FN23 - ■ ■ L1**	
	154	137	9.53	1 070	1.0	34	**2KJ3102 - ■ FN23 - ■ ■ K1**	
	174	120	8.40	1 330	1.1	34	**2KJ3102 - ■ FN23 - ■ ■ J1**	
	201	105	7.29	1 520	1.2	34	**2KJ3102 - ■ FN23 - ■ ■ H1**	
	242	87	6.06	1 340	1.2	34	**2KJ3102 - ■ FN23 - ■ ■ F1**	
	276	76	5.31	1 510	1.2	34	**2KJ3102 - ■ FN23 - ■ ■ E1**	
	304	69	4.82	1 600	1.2	34	**2KJ3102 - ■ FN23 - ■ ■ D1**	
	323	65	4.54	1 650	1.3	34	**2KJ3102 - ■ FN23 - ■ ■ C1**	
	366	57	4.00	1 750	1.3	34	**2KJ3102 - ■ FN23 - ■ ■ B1**	
	422	50	3.47	1 800	1.4	34	**2KJ3102 - ■ FN23 - ■ ■ A1**	
	Z.29-LE90ZLR2P							
	164	128	17.67	1 210	1.1	20	**2KJ3102 - ■ EM23 - ■ ■ R1**	**P00**
	183	115	15.75	1 380	1.2	20	**2KJ3102 - ■ EM23 - ■ ■ Q1**	**P00**
	199	106	14.54	1 510	1.1	20	**2KJ3102 - ■ EM23 - ■ ■ P1**	**P00**
	227	92	12.73	1 690	1.5	20	**2KJ3102 - ■ EM23 - ■ ■ N1**	**P00**
	259	81	11.16	1 800	1.7	20	**2KJ3102 - ■ EM23 - ■ ■ M1**	**P00**
	286	74	10.12	1 860	1.9	20	**2KJ3102 - ■ EM23 - ■ ■ L1**	**P00**
	303	69	9.53	1 920	2.0	20	**2KJ3102 - ■ EM23 - ■ ■ K1**	**P00**
	344	61	8.40	1 970	2.3	20	**2KJ3102 - ■ EM23 - ■ ■ J1**	**P00**
	396	53	7.29	1 900	2.5	20	**2KJ3102 - ■ EM23 - ■ ■ H1**	**P00**
	418	50	6.92	1 820	1.5	20	**2KJ3102 - ■ EM23 - ■ ■ G1**	**P00**
	477	44	6.06	1 770	2.3	20	**2KJ3102 - ■ EM23 - ■ ■ F1**	**P00**
	544	39	5.31	1 710	2.4	20	**2KJ3102 - ■ EM23 - ■ ■ E1**	**P00**
	600	35	4.82	1 680	2.5	20	**2KJ3102 - ■ EM23 - ■ ■ D1**	**P00**
	637	33	4.54	1 650	2.5	20	**2KJ3102 - ■ EM23 - ■ ■ C1**	**P00**
	722	29	4.00	1 600	2.6	20	**2KJ3102 - ■ EM23 - ■ ■ B1**	**P00**
	833	25	3.47	1 550	2.8	20	**2KJ3102 - ■ EM23 - ■ ■ A1**	**P00**
	E.89-LE100ZLSA4P							
	151	139	9.67	8 000	2.0	65	**2KJ3004 - ■ FN23 - ■ ■ T1**	
	168	125	8.73	8 000	2.2	65	**2KJ3004 - ■ FN23 - ■ ■ S1**	
	185	114	7.92	8 000	2.5	65	**2KJ3004 - ■ FN23 - ■ ■ R1**	
	200	105	7.31	8 000	2.5	65	**2KJ3004 - ■ FN23 - ■ ■ Q1**	
	221	95	6.64	8 000	2.7	65	**2KJ3004 - ■ FN23 - ■ ■ P1**	
	261	81	5.62	8 000	4.0	65	**2KJ3004 - ■ FN23 - ■ ■ N1**	
	277	76	5.29	8 000	2.8	65	**2KJ3004 - ■ FN23 - ■ ■ M1**	

Article No. supplement		
Shaft design	**1 or 9**	➞ page 10/43
Frequency and voltage	**2 or 9**	➞ page 11/2
Gearbox mounting type	**A, B, F or H**	➞ page 10/37

© Siemens AG 2017

Selection and ordering data (continued)

P_{rated}	n_2	T_2	i	F_{R2}	f_B	m	Article No.	Order code
kW	rpm	Nm	-	N	-	kg	(Article No. supplement ➞ below)	No. of poles
2.2	**E.69-LE100ZLSA4P**							
	193	109	7.58	6 100	1.9	51	**2KJ3003 - ■ FN23 - ■ ■ Q1**	
	215	98	6.82	6 100	1.7	51	**2KJ3003 - ■ FN23 - ■ ■ P1**	
	237	88	6.17	6 100	2.3	51	**2KJ3003 - ■ FN23 - ■ ■ N1**	
	257	82	5.69	6 100	2.0	51	**2KJ3003 - ■ FN23 - ■ ■ M1**	
	281	75	5.21	6 100	2.7	51	**2KJ3003 - ■ FN23 - ■ ■ L1**	
	334	63	4.38	6 100	3.2	51	**2KJ3003 - ■ FN23 - ■ ■ K1**	
	356	59	4.12	6 100	2.8	51	**2KJ3003 - ■ FN23 - ■ ■ J1**	
	388	54	3.78	6 100	3.7	51	**2KJ3003 - ■ FN23 - ■ ■ H1**	
	444	47	3.30	6 100	4.2	51	**2KJ3003 - ■ FN23 - ■ ■ G1**	
	497	42	2.95	6 100	4.7	51	**2KJ3003 - ■ FN23 - ■ ■ F1**	
	568	37	2.58	6 100	5.3	51	**2KJ3003 - ■ FN23 - ■ ■ E1**	
	E.49-LE100ZLSA4P							
	241	87	6.08	4 000	1.2	44	**2KJ3002 - ■ FN23 - ■ ■ N1**	
	269	78	5.45	4 000	1.3	44	**2KJ3002 - ■ FN23 - ■ ■ M1**	
	298	71	4.92	4 000	1.4	44	**2KJ3002 - ■ FN23 - ■ ■ L1**	
	323	65	4.54	4 000	1.6	44	**2KJ3002 - ■ FN23 - ■ ■ K1**	
	354	59	4.14	4 000	1.7	44	**2KJ3002 - ■ FN23 - ■ ■ J1**	
	426	49	3.44	4 000	2.0	44	**2KJ3002 - ■ FN23 - ■ ■ H1**	
	452	46	3.24	4 000	2.2	44	**2KJ3002 - ■ FN23 - ■ ■ G1**	
	479	44	3.06	3 950	2.3	44	**2KJ3002 - ■ FN23 - ■ ■ F1**	
	563	37	2.60	3 770	2.7	44	**2KJ3002 - ■ FN23 - ■ ■ E1**	
	657	32	2.23	3 590	3.2	44	**2KJ3002 - ■ FN23 - ■ ■ D1**	
	747	28	1.96	3 460	3.7	44	**2KJ3002 - ■ FN23 - ■ ■ C1**	
	888	24	1.65	3 280	4.4	44	**2KJ3002 - ■ FN23 - ■ ■ B1**	
	1 017	21	1.44	3 140	4.9	44	**2KJ3002 - ■ FN23 - ■ ■ A1**	
	E.39-LE100ZLSA4P							
	358	59	4.09	2 880	0.82	37	**2KJ3001 - ■ FN23 - ■ ■ K1**	
	409	51	3.58	2 950	1.1	37	**2KJ3001 - ■ FN23 - ■ ■ J1**	
	443	48	3.31	2 960	1.2	37	**2KJ3001 - ■ FN23 - ■ ■ H1**	
	500	42	2.93	2 890	1.5	37	**2KJ3001 - ■ FN23 - ■ ■ G1**	
	600	35	2.44	2 750	1.9	37	**2KJ3001 - ■ FN23 - ■ ■ F1**	
	640	33	2.29	2 710	2.0	37	**2KJ3001 - ■ FN23 - ■ ■ E1**	
	711	30	2.06	2 620	2.2	37	**2KJ3001 - ■ FN23 - ■ ■ D1**	
	837	25	1.75	2 510	2.6	37	**2KJ3001 - ■ FN23 - ■ ■ C1**	
	977	22	1.50	2 400	2.8	37	**2KJ3001 - ■ FN23 - ■ ■ B1**	
	1 136	18	1.29	2 300	2.9	37	**2KJ3001 - ■ FN23 - ■ ■ A1**	
3	**D.169-LE132SH6P**							
	3.0	9 660	327.18	71 700	1.4	480	**2KJ3213 - ■ HF23 - ■ ■ V1**	**P01**
	3.2	9 010	305.28	72 000	1.6	480	**2KJ3213 - ■ HF23 - ■ ■ U1**	**P01**
	3.6	8 010	271.40	72 400	1.7	480	**2KJ3213 - ■ HF23 - ■ ■ T1**	**P01**
	4.0	7 190	243.68	72 700	1.9	480	**2KJ3213 - ■ HF23 - ■ ■ S1**	**P01**
	D.149-LE132SH6P							
	3.0	9 690	328.38	50 300	0.82	302	**2KJ3212 - ■ HF23 - ■ ■ W1**	**P01**
	3.5	8 300	281.04	51 000	0.96	302	**2KJ3212 - ■ HF23 - ■ ■ V1**	**P01**
	3.7	7 810	264.51	51 300	1.0	302	**2KJ3212 - ■ HF23 - ■ ■ U1**	**P01**
	3.9	7 320	247.95	51 500	1.1	302	**2KJ3212 - ■ HF23 - ■ ■ T1**	**P01**
	D.149-LE100ZLSB4P							
	4.4	6 460	328.38	51 900	1.2	278	**2KJ3212 - ■ FP23 - ■ ■ W1**	
	5.2	5 530	281.04	52 300	1.4	278	**2KJ3212 - ■ FP23 - ■ ■ V1**	

Article No. supplement		
Shaft design	**1 or 9**	➞ page 10/43
Frequency and voltage	**2 or 9**	➞ page 11/2
Gearbox mounting type	**A, B, F or H**	➞ page 10/37

© Siemens AG 2017

3

Selection and ordering data (continued)

P_{rated}	n_2	T_2	i	F_{R2}	f_B	m	Article No.	Order code
kW	rpm	Nm	-	N	-	kg	(Article No. supplement ➞ below)	No. of poles
3	**D.149-LE100ZLSB4P**							
	5.5	5 200	264.51	52 500	1.5	278	**2KJ3212 - ■ FP23 - ■ ■ U1**	
	5.9	4 880	247.95	52 700	1.6	278	**2KJ3212 - ■ FP23 - ■ ■ T1**	
	6.6	4 320	219.80	52 900	1.8	278	**2KJ3212 - ■ FP23 - ■ ■ S1**	
	7.5	3 840	195.24	53 100	2.1	278	**2KJ3212 - ■ FP23 - ■ ■ R1**	
	D.129-LE100ZLSB4P							
	4.6	6 240	316.90	26 300	0.80	194	**2KJ3211 - ■ FP23 - ■ ■ Q1**	
	5.4	5 320	270.24	26 800	0.94	194	**2KJ3211 - ■ FP23 - ■ ■ P1**	
	5.7	5 000	254.34	27 000	1.0	194	**2KJ3211 - ■ FP23 - ■ ■ N1**	
	6.2	4 640	236.03	27 200	1.1	194	**2KJ3211 - ■ FP23 - ■ ■ M1**	
	7.0	4 100	208.67	27 500	1.2	194	**2KJ3211 - ■ FP23 - ■ ■ L1**	
	7.8	3 660	186.28	27 800	1.4	194	**2KJ3211 - ■ FP23 - ■ ■ K1**	
	8.7	3 300	167.63	28 000	1.5	194	**2KJ3211 - ■ FP23 - ■ ■ J1**	
	10	2 860	145.49	28 300	1.7	194	**2KJ3211 - ■ FP23 - ■ ■ H1**	
	11	2 570	130.84	28 400	1.9	194	**2KJ3211 - ■ FP23 - ■ ■ G1**	
	13	2 250	114.36	28 600	2.2	194	**2KJ3211 - ■ FP23 - ■ ■ F1**	
	D.109-LE100ZLSB4P							
	7.6	3 760	191.07	20 100	0.82	130	**2KJ3210 - ■ FP23 - ■ ■ M1**	
	8.2	3 470	176.45	20 200	0.89	130	**2KJ3210 - ■ FP23 - ■ ■ L1**	
	9.3	3 090	157.00	20 200	1.0	130	**2KJ3210 - ■ FP23 - ■ ■ K1**	
	10	2 740	139.44	20 200	1.1	130	**2KJ3210 - ■ FP23 - ■ ■ J1**	
	12	2 450	124.82	20 200	1.3	130	**2KJ3210 - ■ FP23 - ■ ■ H1**	
	14	2 100	106.70	20 200	1.5	130	**2KJ3210 - ■ FP23 - ■ ■ G1**	
	15	1 870	95.28	20 200	1.7	130	**2KJ3210 - ■ FP23 - ■ ■ F1**	
	17	1 650	84.21	20 200	1.9	130	**2KJ3210 - ■ FP23 - ■ ■ E1**	
	20	1 450	73.90	20 200	2.1	130	**2KJ3210 - ■ FP23 - ■ ■ D1**	
	23	1 260	64.34	20 200	2.4	130	**2KJ3210 - ■ FP23 - ■ ■ C1**	
	D.89-LE100ZLSB4P							
	15	1 940	98.99	18 500	0.86	88	**2KJ3208 - ■ FP23 - ■ ■ F1**	
	17	1 700	86.56	18 500	0.99	88	**2KJ3208 - ■ FP23 - ■ ■ E1**	
	20	1 460	74.30	18 500	1.1	88	**2KJ3208 - ■ FP23 - ■ ■ D1**	
	22	1 290	65.67	18 500	1.3	88	**2KJ3208 - ■ FP23 - ■ ■ C1**	
	Z.89-LE100ZLSB4P							
	25	1 120	57.36	18 500	1.5	87	**2KJ3108 - ■ FP23 - ■ ■ A2**	
	28	1 020	51.78	18 500	1.6	87	**2KJ3108 - ■ FP23 - ■ ■ X1**	
	31	925	46.97	18 500	1.8	87	**2KJ3108 - ■ FP23 - ■ ■ W1**	
	34	850	43.36	18 500	2.0	87	**2KJ3108 - ■ FP23 - ■ ■ V1**	
	37	775	39.41	18 500	2.2	87	**2KJ3108 - ■ FP23 - ■ ■ U1**	
	44	655	33.38	18 500	2.6	87	**2KJ3108 - ■ FP23 - ■ ■ T1**	
	46	615	31.41	18 500	2.7	87	**2KJ3108 - ■ FP23 - ■ ■ S1**	
	D.79-LE100ZLSB4P							
	30	965	49.02	10 700	0.87	65	**2KJ3207 - ■ FP23 - ■ ■ A1**	
	Z.79-LE100ZLSB4P							
	33	875	44.42	11 200	0.96	64	**2KJ3107 - ■ FP23 - ■ ■ W1**	
	36	785	39.94	11 700	1.1	64	**2KJ3107 - ■ FP23 - ■ ■ V1**	
	40	710	36.12	12 100	1.2	64	**2KJ3107 - ■ FP23 - ■ ■ U1**	
	44	655	33.34	12 300	1.3	64	**2KJ3107 - ■ FP23 - ■ ■ T1**	
	48	600	30.54	12 500	1.4	64	**2KJ3107 - ■ FP23 - ■ ■ S1**	
	57	500	25.62	12 800	1.7	64	**2KJ3107 - ■ FP23 - ■ ■ R1**	
	60	475	24.12	12 800	1.8	64	**2KJ3107 - ■ FP23 - ■ ■ Q1**	

Article No. supplement		
Shaft design	**1 or 9**	➞ page 10/43
Frequency and voltage	**2 or 9**	➞ page 11/2
Gearbox mounting type	**A, B, F or H**	➞ page 10/37

© Siemens AG 2017

Selection and ordering data (continued)

P_{rated}	n_2	T_2	i	F_{R2}	f_B	m	Article No.	Order code
kW	rpm	Nm	-	N	-	kg	(Article No. supplement ➞ below)	No. of poles
3	**Z.79-LE100ZLSB4P**							
	66	435	22.13	12 800	1.9	64	**2KJ3107 - ■ FP23 - ■ ■ P1**	
	75	380	19.33	12 800	2.2	64	**2KJ3107 - ■ FP23 - ■ ■ N1**	
	84	340	17.31	12 700	2.5	64	**2KJ3107 - ■ FP23 - ■ ■ M1**	
	96	295	15.13	12 400	2.8	64	**2KJ3107 - ■ FP23 - ■ ■ L1**	
	112	255	12.99	11 900	3.3	64	**2KJ3107 - ■ FP23 - ■ ■ K1**	
	127	225	11.48	11 500	3.7	64	**2KJ3107 - ■ FP23 - ■ ■ J1**	
	Z.69-LE100ZLSB4P							
	38	750	38.24	9 110	0.80	55	**2KJ3106 - ■ FP23 - ■ ■ U1**	
	42	675	34.29	9 760	0.89	55	**2KJ3106 - ■ FP23 - ■ ■ T1**	
	47	605	30.90	10 300	0.99	55	**2KJ3106 - ■ FP23 - ■ ■ S1**	
	51	560	28.53	10 600	1.1	55	**2KJ3106 - ■ FP23 - ■ ■ R1**	
	56	510	26.04	11 000	1.2	55	**2KJ3106 - ■ FP23 - ■ ■ Q1**	
	67	425	21.61	11 200	1.4	55	**2KJ3106 - ■ FP23 - ■ ■ P1**	
	72	400	20.34	11 300	1.5	55	**2KJ3106 - ■ FP23 - ■ ■ N1**	
	76	375	19.21	11 200	1.6	55	**2KJ3106 - ■ FP23 - ■ ■ M1**	
	89	320	16.34	10 700	1.9	55	**2KJ3106 - ■ FP23 - ■ ■ L1**	
	104	275	14.00	10 300	2.2	55	**2KJ3106 - ■ FP23 - ■ ■ K1**	
	118	240	12.31	9 970	2.5	55	**2KJ3106 - ■ FP23 - ■ ■ J1**	
	140	205	10.39	9 490	2.9	55	**2KJ3106 - ■ FP23 - ■ ■ H1**	
	161	178	9.05	9 120	3.3	55	**2KJ3106 - ■ FP23 - ■ ■ G1**	
	171	167	8.50	8 940	2.7	55	**2KJ3106 - ■ FP23 - ■ ■ F1**	
	201	142	7.23	8 530	3.1	55	**2KJ3106 - ■ FP23 - ■ ■ E1**	
	235	122	6.20	8 140	3.6	55	**2KJ3106 - ■ FP23 - ■ ■ D1**	
	267	107	5.45	7 830	4.0	55	**2KJ3106 - ■ FP23 - ■ ■ C1**	
	316	91	4.60	7 430	4.9	55	**2KJ3106 - ■ FP23 - ■ ■ B1**	
	Z.59-LE100ZLSB4P							
	55	525	26.66	5 620	0.86	50	**2KJ3105 - ■ FP23 - ■ ■ R1**	
	60	475	24.34	5 590	0.94	50	**2KJ3105 - ■ FP23 - ■ ■ Q1**	
	72	395	20.20	5 140	1.1	50	**2KJ3105 - ■ FP23 - ■ ■ P1**	
	77	370	19.01	5 350	1.2	50	**2KJ3105 - ■ FP23 - ■ ■ N1**	
	81	350	17.95	5 360	1.3	50	**2KJ3105 - ■ FP23 - ■ ■ M1**	
	95	300	15.27	5 200	1.5	50	**2KJ3105 - ■ FP23 - ■ ■ L1**	
	111	255	13.09	5 060	1.7	50	**2KJ3105 - ■ FP23 - ■ ■ K1**	
	126	225	11.51	4 920	2.0	50	**2KJ3105 - ■ FP23 - ■ ■ J1**	
	150	191	9.71	4 730	2.4	50	**2KJ3105 - ■ FP23 - ■ ■ H1**	
	172	167	8.46	4 580	2.7	50	**2KJ3105 - ■ FP23 - ■ ■ G1**	
	180	159	8.07	4 500	2.6	50	**2KJ3105 - ■ FP23 - ■ ■ F1**	
	212	135	6.86	4 330	3.0	50	**2KJ3105 - ■ FP23 - ■ ■ E1**	
	247	116	5.88	4 160	3.5	50	**2KJ3105 - ■ FP23 - ■ ■ D1**	
	281	102	5.17	4 020	4.0	50	**2KJ3105 - ■ FP23 - ■ ■ C1**	
	334	86	4.36	3 840	4.7	50	**2KJ3105 - ■ FP23 - ■ ■ B1**	
	383	75	3.80	3 700	5.4	50	**2KJ3105 - ■ FP23 - ■ ■ A1**	
	Z.49-LE100ZLSB4P							
	79	360	18.48	4 200	0.88	48	**2KJ3104 - ■ FP23 - ■ ■ Q1**	
	84	340	17.39	4 160	0.93	48	**2KJ3104 - ■ FP23 - ■ ■ P1**	
	89	320	16.42	4 140	0.99	48	**2KJ3104 - ■ FP23 - ■ ■ N1**	
	104	275	13.98	4 030	1.2	48	**2KJ3104 - ■ FP23 - ■ ■ M1**	
	122	235	11.97	3 930	1.4	48	**2KJ3104 - ■ FP23 - ■ ■ L1**	

Article No. supplement		
Shaft design	**1 or 9**	➞ page 10/43
Frequency and voltage	**2 or 9**	➞ page 11/2
Gearbox mounting type	**A, B, F or H**	➞ page 10/37

© Siemens AG 2017

3

Selection and ordering data (continued)

P_{rated}	n_2	T_2	i	F_{R2}	f_B	m	Article No.	Order code
kW	rpm	Nm	-	N	-	kg	(Article No. supplement ➞ below)	No. of poles
3	**Z.49-LE100ZLSB4P**							
	138	205	10.53	3 610	1.5	48	**2KJ3104 - ■ FP23 - ■ ■ K1**	
	164	175	8.88	3 710	1.8	48	**2KJ3104 - ■ FP23 - ■ ■ J1**	
	188	152	7.74	3 600	2.1	48	**2KJ3104 - ■ FP23 - ■ ■ H1**	
	190	150	7.64	3 230	2.0	48	**2KJ3104 - ■ FP23 - ■ ■ G1**	
	202	142	7.21	3 330	2.0	48	**2KJ3104 - ■ FP23 - ■ ■ F1**	
	237	121	6.14	3 370	2.2	48	**2KJ3104 - ■ FP23 - ■ ■ E1**	
	277	104	5.26	3 250	2.4	48	**2KJ3104 - ■ FP23 - ■ ■ D1**	
	315	91	4.62	3 150	2.5	48	**2KJ3104 - ■ FP23 - ■ ■ C1**	
	373	77	3.90	3 010	2.7	48	**2KJ3104 - ■ FP23 - ■ ■ B1**	
	428	67	3.40	2 900	2.9	48	**2KJ3104 - ■ FP23 - ■ ■ A1**	
	Z.39-LE100ZLSB4P							
	137	205	10.62	545	0.81	36	**2KJ3103 - ■ FP23 - ■ ■ J1**	
	160	179	9.10	910	0.88	36	**2KJ3103 - ■ FP23 - ■ ■ H1**	
	186	154	7.84	1 270	0.96	36	**2KJ3103 - ■ FP23 - ■ ■ G1**	
	225	127	6.46	825	1.1	36	**2KJ3103 - ■ FP23 - ■ ■ F1**	
	239	120	6.08	950	1.2	36	**2KJ3103 - ■ FP23 - ■ ■ E1**	
	267	107	5.45	1 180	1.3	36	**2KJ3103 - ■ FP23 - ■ ■ D1**	
	314	91	4.64	1 450	1.4	36	**2KJ3103 - ■ FP23 - ■ ■ C1**	
	366	78	3.98	1 640	1.5	36	**2KJ3103 - ■ FP23 - ■ ■ B1**	
	424	68	3.43	1 750	1.7	36	**2KJ3103 - ■ FP23 - ■ ■ A1**	
	Z.29-LE100ZLSB4P							
	173	165	8.40	150	0.83	34	**2KJ3102 - ■ FP23 - ■ ■ J1**	
	200	144	7.29	495	0.91	34	**2KJ3102 - ■ FP23 - ■ ■ H1**	
	240	119	6.06	360	0.84	34	**2KJ3102 - ■ FP23 - ■ ■ F1**	
	274	105	5.31	620	0.87	34	**2KJ3102 - ■ FP23 - ■ ■ E1**	
	302	95	4.82	805	0.91	34	**2KJ3102 - ■ FP23 - ■ ■ D1**	
	320	89	4.54	915	0.94	34	**2KJ3102 - ■ FP23 - ■ ■ C1**	
	364	79	4.00	1 070	0.96	34	**2KJ3102 - ■ FP23 - ■ ■ B1**	
	419	68	3.47	1 250	1.0	34	**2KJ3102 - ■ FP23 - ■ ■ A1**	
	E.129-LE100ZLSB4P							
	149	193	9.79	13 500	3.4	114	**2KJ3006 - ■ FP23 - ■ ■ T1**	
	174	165	8.38	13 500	4.0	114	**2KJ3006 - ■ FP23 - ■ ■ S1**	
	185	155	7.88	13 500	4.3	114	**2KJ3006 - ■ FP23 - ■ ■ R1**	
	E.109-LE100ZLSB4P							
	202	142	7.19	10 500	4.0	89	**2KJ3005 - ■ FP23 - ■ ■ Q1**	
	215	133	6.76	10 500	4.2	89	**2KJ3005 - ■ FP23 - ■ ■ P1**	
	232	124	6.28	10 500	4.6	89	**2KJ3005 - ■ FP23 - ■ ■ N1**	
	E.89-LE100ZLSB4P							
	150	190	9.67	8 000	1.5	65	**2KJ3004 - ■ FP23 - ■ ■ T1**	
	167	172	8.73	8 000	1.6	65	**2KJ3004 - ■ FP23 - ■ ■ S1**	
	184	156	7.92	8 000	1.8	65	**2KJ3004 - ■ FP23 - ■ ■ R1**	
	199	144	7.31	8 000	1.8	65	**2KJ3004 - ■ FP23 - ■ ■ Q1**	
	219	131	6.64	8 000	2.0	65	**2KJ3004 - ■ FP23 - ■ ■ P1**	
	259	111	5.62	8 000	2.9	65	**2KJ3004 - ■ FP23 - ■ ■ N1**	
	275	104	5.29	8 000	2.0	65	**2KJ3004 - ■ FP23 - ■ ■ M1**	
	298	96	4.89	8 000	3.7	65	**2KJ3004 - ■ FP23 - ■ ■ L1**	
	334	86	4.35	8 000	4.2	65	**2KJ3004 - ■ FP23 - ■ ■ K1**	
	377	76	3.86	8 000	4.7	65	**2KJ3004 - ■ FP23 - ■ ■ J1**	
	421	68	3.46	8 000	5.4	65	**2KJ3004 - ■ FP23 - ■ ■ H1**	

Article No. supplement		
Shaft design	**1 or 9**	➞ page 10/43
Frequency and voltage	**2 or 9**	➞ page 11/2
Gearbox mounting type	**A, B, F or H**	➞ page 10/37

© Siemens AG 2017

Selection and ordering data (continued)

P_{rated}	n_2	T_2	i	F_{R2}	f_B	m	Article No.	Order code
kW	rpm	Nm	-	N	-	kg	(Article No. supplement ➞ below)	No. of poles
3	**E.69-LE100ZLSB4P**							
	192	149	7.58	6 100	1.4	51	**2KJ3003 - ■ FP23 - ■ ■ Q1**	
	213	134	6.82	6 100	1.3	51	**2KJ3003 - ■ FP23 - ■ ■ P1**	
	236	121	6.17	6 100	1.7	51	**2KJ3003 - ■ FP23 - ■ ■ N1**	
	256	112	5.69	6 100	1.5	51	**2KJ3003 - ■ FP23 - ■ ■ M1**	
	279	103	5.21	6 100	1.9	51	**2KJ3003 - ■ FP23 - ■ ■ L1**	
	332	86	4.38	6 100	2.3	51	**2KJ3003 - ■ FP23 - ■ ■ K1**	
	353	81	4.12	6 100	2.0	51	**2KJ3003 - ■ FP23 - ■ ■ J1**	
	385	74	3.78	6 100	2.7	51	**2KJ3003 - ■ FP23 - ■ ■ H1**	
	441	65	3.30	6 100	3.1	51	**2KJ3003 - ■ FP23 - ■ ■ G1**	
	493	58	2.95	6 100	3.4	51	**2KJ3003 - ■ FP23 - ■ ■ F1**	
	564	51	2.58	6 100	3.9	51	**2KJ3003 - ■ FP23 - ■ ■ E1**	
	655	44	2.22	6 100	4.5	51	**2KJ3003 - ■ FP23 - ■ ■ D1**	
	742	39	1.96	6 100	5.1	51	**2KJ3003 - ■ FP23 - ■ ■ C1**	
	871	33	1.67	6 100	6.0	51	**2KJ3003 - ■ FP23 - ■ ■ B1**	
	E.49-LE100ZLSB4P							
	239	120	6.08	4 000	0.87	44	**2KJ3002 - ■ FP23 - ■ ■ N1**	
	267	107	5.45	4 000	0.96	44	**2KJ3002 - ■ FP23 - ■ ■ M1**	
	296	97	4.92	4 000	1.1	44	**2KJ3002 - ■ FP23 - ■ ■ L1**	
	320	89	4.54	4 000	1.1	44	**2KJ3002 - ■ FP23 - ■ ■ K1**	
	351	82	4.14	4 000	1.3	44	**2KJ3002 - ■ FP23 - ■ ■ J1**	
	423	68	3.44	3 960	1.5	44	**2KJ3002 - ■ FP23 - ■ ■ H1**	
	449	64	3.24	3 900	1.6	44	**2KJ3002 - ■ FP23 - ■ ■ G1**	
	475	60	3.06	3 840	1.7	44	**2KJ3002 - ■ FP23 - ■ ■ F1**	
	560	51	2.60	3 680	2.0	44	**2KJ3002 - ■ FP23 - ■ ■ E1**	
	652	44	2.23	3 510	2.3	44	**2KJ3002 - ■ FP23 - ■ ■ D1**	
	742	39	1.96	3 380	2.7	44	**2KJ3002 - ■ FP23 - ■ ■ C1**	
	882	32	1.65	3 230	3.2	44	**2KJ3002 - ■ FP23 - ■ ■ B1**	
	1 010	28	1.44	3 100	3.6	44	**2KJ3002 - ■ FP23 - ■ ■ A1**	
	E.39-LE100ZLSB4P							
	406	70	3.58	1 880	0.82	37	**2KJ3001 - ■ FP23 - ■ ■ J1**	
	440	65	3.31	2 010	0.89	37	**2KJ3001 - ■ FP23 - ■ ■ H1**	
	497	58	2.93	2 040	1.1	37	**2KJ3001 - ■ FP23 - ■ ■ G1**	
	635	45	2.29	2 260	1.5	37	**2KJ3001 - ■ FP23 - ■ ■ E1**	
	706	41	2.06	2 210	1.6	37	**2KJ3001 - ■ FP23 - ■ ■ D1**	
	831	34	1.75	2 300	1.9	37	**2KJ3001 - ■ FP23 - ■ ■ C1**	
	970	30	1.50	2 230	2.1	37	**2KJ3001 - ■ FP23 - ■ ■ B1**	
	1 128	25	1.29	2 230	2.1	37	**2KJ3001 - ■ FP23 - ■ ■ A1**	
4	**D.189-LE132MJ6P**							
	3.1	12 300	313.63	107 000	1.5	698	**2KJ3214 - ■ HK23 - ■ ■ T1**	**P01**
	3.5	11 000	280.59	107 000	1.7	698	**2KJ3214 - ■ HK23 - ■ ■ S1**	**P01**
	3.8	9 960	253.06	107 000	1.9	698	**2KJ3214 - ■ HK23 - ■ ■ R1**	**P01**
	D.169-LE132MJ6P							
	3.0	12 800	327.18	70 600	1.1	485	**2KJ3213 - ■ HK23 - ■ ■ V1**	**P01**
	3.2	12 000	305.28	70 900	1.2	485	**2KJ3213 - ■ HK23 - ■ ■ U1**	**P01**
	3.6	10 600	271.40	71 400	1.3	485	**2KJ3213 - ■ HK23 - ■ ■ T1**	**P01**
	4.0	9 590	243.68	71 800	1.5	485	**2KJ3213 - ■ HK23 - ■ ■ S1**	**P01**
	D.169-LE112ZMKB4P							
	4.5	8 560	327.18	72 200	1.6	458	**2KJ3213 - ■ GJ23 - ■ ■ V1**	
	4.8	7 980	305.28	72 400	1.8	458	**2KJ3213 - ■ GJ23 - ■ ■ U1**	

Article No. supplement		
Shaft design	**1 or 9**	➞ page 10/43
Frequency and voltage	**2 or 9**	➞ page 11/2
Gearbox mounting type	**A, B, F or H**	➞ page 10/37

© Siemens AG 2017

3

Selection and ordering data (continued)

P_{rated}	n_2	T_2	i	F_{R2}	f_B	m	Article No.	Order code
kW	rpm	Nm	-	N	-	kg	(Article No. supplement ➞ below)	No. of poles
4	**D.169-LE112ZMKB4P**							
	5.4	7 100	271.40	72 700	2.0	458	**2KJ3213 - ■ GJ23 - ■ ■ T1**	
	D.149-LE132MJ6P							
	3.9	9 760	247.95	50 300	0.82	307	**2KJ3212 - ■ HK23 - ■ ■ T1**	**P01**
	D.149-LE112ZMKB4P							
	4.4	8 590	328.38	50 900	0.93	280	**2KJ3212 - ■ GJ23 - ■ ■ W1**	
	5.2	7 350	281.04	51 500	1.1	280	**2KJ3212 - ■ GJ23 - ■ ■ V1**	
	5.5	6 920	264.51	51 700	1.2	280	**2KJ3212 - ■ GJ23 - ■ ■ U1**	
	5.9	6 480	247.95	51 900	1.2	280	**2KJ3212 - ■ GJ23 - ■ ■ T1**	
	6.6	5 750	219.80	52 200	1.4	280	**2KJ3212 - ■ GJ23 - ■ ■ S1**	
	7.5	5 100	195.24	52 600	1.6	280	**2KJ3212 - ■ GJ23 - ■ ■ R1**	
	8.3	4 610	176.18	52 800	1.7	280	**2KJ3212 - ■ GJ23 - ■ ■ Q1**	
	9.4	4 080	156.11	53 000	2.0	280	**2KJ3212 - ■ GJ23 - ■ ■ P1**	
	11	3 610	138.26	53 300	2.2	280	**2KJ3212 - ■ GJ23 - ■ ■ N1**	
	D.129-LE112ZMKB4P							
	6.2	6 170	236.03	26 300	0.81	194	**2KJ3211 - ■ GJ23 - ■ ■ M1**	
	7.0	5 460	208.67	26 700	0.92	194	**2KJ3211 - ■ GJ23 - ■ ■ L1**	
	7.8	4 870	186.28	27 100	1.0	194	**2KJ3211 - ■ GJ23 - ■ ■ K1**	
	8.7	4 380	167.63	27 400	1.1	194	**2KJ3211 - ■ GJ23 - ■ ■ J1**	
	10	3 800	145.49	27 700	1.3	194	**2KJ3211 - ■ GJ23 - ■ ■ H1**	
	11	3 420	130.84	27 900	1.5	194	**2KJ3211 - ■ GJ23 - ■ ■ G1**	
	13	2 990	114.36	28 200	1.7	194	**2KJ3211 - ■ GJ23 - ■ ■ F1**	
	14	2 670	102.05	28 400	1.9	194	**2KJ3211 - ■ GJ23 - ■ ■ E1**	
	16	2 350	89.91	28 600	2.1	194	**2KJ3211 - ■ GJ23 - ■ ■ D1**	
	D.109-LE112ZMKB4P							
	10	3 640	139.44	20 200	0.85	130	**2KJ3210 - ■ GJ23 - ■ ■ J1**	
	12	3 260	124.82	20 200	0.95	130	**2KJ3210 - ■ GJ23 - ■ ■ H1**	
	14	2 790	106.70	20 200	1.1	130	**2KJ3210 - ■ GJ23 - ■ ■ G1**	
	15	2 490	95.28	20 200	1.2	130	**2KJ3210 - ■ GJ23 - ■ ■ F1**	
	17	2 200	84.21	20 200	1.4	130	**2KJ3210 - ■ GJ23 - ■ ■ E1**	
	20	1 930	73.90	20 200	1.6	130	**2KJ3210 - ■ GJ23 - ■ ■ D1**	
	23	1 680	64.34	20 200	1.8	130	**2KJ3210 - ■ GJ23 - ■ ■ C1**	
	Z.109-LE112ZMKB4P							
	29	1 330	51.17	20 200	2.3	128	**2KJ3110 - ■ GJ23 - ■ ■ X1**	
	D.89-LE112ZMKB4P							
	20	1 940	74.30	18 500	0.86	88	**2KJ3208 - ■ GJ23 - ■ ■ D1**	
	22	1 710	65.67	18 500	0.98	88	**2KJ3208 - ■ GJ23 - ■ ■ C1**	
	Z.89-LE112ZMKB4P							
	25	1 500	57.36	18 500	1.1	87	**2KJ3108 - ■ GJ23 - ■ ■ A2**	
	28	1 350	51.78	18 500	1.2	87	**2KJ3108 - ■ GJ23 - ■ ■ X1**	
	31	1 220	46.97	18 500	1.4	87	**2KJ3108 - ■ GJ23 - ■ ■ W1**	
	34	1 130	43.36	18 500	1.5	87	**2KJ3108 - ■ GJ23 - ■ ■ V1**	
	37	1 030	39.41	18 500	1.6	87	**2KJ3108 - ■ GJ23 - ■ ■ U1**	
	44	870	33.38	18 500	1.9	87	**2KJ3108 - ■ GJ23 - ■ ■ T1**	
	46	820	31.41	18 500	2.0	87	**2KJ3108 - ■ GJ23 - ■ ■ S1**	
	50	755	29.01	18 500	2.2	87	**2KJ3108 - ■ GJ23 - ■ ■ R1**	
	57	675	25.81	18 500	2.5	87	**2KJ3108 - ■ GJ23 - ■ ■ Q1**	
	64	600	22.92	18 500	2.8	87	**2KJ3108 - ■ GJ23 - ■ ■ P1**	
	71	535	20.52	18 500	3.1	87	**2KJ3108 - ■ GJ23 - ■ ■ N1**	

Article No. supplement		
Shaft design	**1 or 9**	➞ page 10/43
Frequency and voltage	**2 or 9**	➞ page 11/2
Gearbox mounting type	**A, B, F or H**	➞ page 10/37

© Siemens AG 2017

Selection and ordering data (continued)

P_{rated}	n_2	T_2	i	F_{R2}	f_B	m	Article No.	Order code
kW	rpm	Nm	-	N	-	kg	(Article No. supplement ➞ below)	No. of poles
4	**Z.79-LE112ZMKB4P**							
	37	1 040	39.94	13 100	0.80	65	**2KJ3107 - ■ GJ23 - ■ ■ V1**	
	40	945	36.12	13 200	0.89	65	**2KJ3107 - ■ GJ23 - ■ ■ U1**	
	44	870	33.34	13 300	0.96	65	**2KJ3107 - ■ GJ23 - ■ ■ T1**	
	48	795	30.54	13 400	1.1	65	**2KJ3107 - ■ GJ23 - ■ ■ S1**	
	57	670	25.62	10 200	1.3	65	**2KJ3107 - ■ GJ23 - ■ ■ R1**	
	61	630	24.12	10 400	1.3	65	**2KJ3107 - ■ GJ23 - ■ ■ Q1**	
	66	575	22.13	10 700	1.5	65	**2KJ3107 - ■ GJ23 - ■ ■ P1**	
	76	505	19.33	10 900	1.7	65	**2KJ3107 - ■ GJ23 - ■ ■ N1**	
	84	450	17.31	11 000	1.9	65	**2KJ3107 - ■ GJ23 - ■ ■ M1**	
	96	395	15.13	11 100	2.1	65	**2KJ3107 - ■ GJ23 - ■ ■ L1**	
	112	340	12.99	11 000	2.5	65	**2KJ3107 - ■ GJ23 - ■ ■ K1**	
	127	300	11.48	11 000	2.8	65	**2KJ3107 - ■ GJ23 - ■ ■ J1**	
	150	255	9.76	10 700	3.2	65	**2KJ3107 - ■ GJ23 - ■ ■ H1**	
	174	215	8.37	10 300	3.6	65	**2KJ3107 - ■ GJ23 - ■ ■ G1**	
	178	210	8.19	10 000	3.3	65	**2KJ3107 - ■ GJ23 - ■ ■ F1**	
	204	187	7.16	9 780	3.9	65	**2KJ3107 - ■ GJ23 - ■ ■ E1**	
	237	161	6.15	9 350	4.4	65	**2KJ3107 - ■ GJ23 - ■ ■ D1**	
	269	142	5.43	9 020	4.8	65	**2KJ3107 - ■ GJ23 - ■ ■ C1**	
	Z.69-LE112ZMKB4P							
	51	745	28.53	10 600	0.80	56	**2KJ3106 - ■ GJ23 - ■ ■ R1**	
	56	680	26.04	7 580	0.88	56	**2KJ3106 - ■ GJ23 - ■ ■ Q1**	
	68	565	21.61	8 620	1.1	56	**2KJ3106 - ■ GJ23 - ■ ■ P1**	
	72	530	20.34	8 930	1.1	56	**2KJ3106 - ■ GJ23 - ■ ■ N1**	
	76	500	19.21	9 160	1.2	56	**2KJ3106 - ■ GJ23 - ■ ■ M1**	
	89	425	16.34	9 670	1.4	56	**2KJ3106 - ■ GJ23 - ■ ■ L1**	
	104	365	14.00	9 960	1.6	56	**2KJ3106 - ■ GJ23 - ■ ■ K1**	
	119	320	12.31	9 700	1.9	56	**2KJ3106 - ■ GJ23 - ■ ■ J1**	
	141	270	10.39	9 270	2.2	56	**2KJ3106 - ■ GJ23 - ■ ■ H1**	
	161	235	9.05	8 930	2.5	56	**2KJ3106 - ■ GJ23 - ■ ■ G1**	
	172	220	8.50	8 750	2.0	56	**2KJ3106 - ■ GJ23 - ■ ■ F1**	
	202	189	7.23	8 360	2.4	56	**2KJ3106 - ■ GJ23 - ■ ■ E1**	
	235	162	6.20	8 000	2.7	56	**2KJ3106 - ■ GJ23 - ■ ■ D1**	
	268	143	5.45	7 700	3.0	56	**2KJ3106 - ■ GJ23 - ■ ■ C1**	
	317	120	4.60	7 330	3.7	56	**2KJ3106 - ■ GJ23 - ■ ■ B1**	
	364	105	4.01	7 030	4.2	56	**2KJ3106 - ■ GJ23 - ■ ■ A1**	
	Z.59-LE112ZMKB4P							
	72	525	20.20	4 930	0.85	51	**2KJ3105 - ■ GJ23 - ■ ■ P1**	
	77	495	19.01	4 910	0.90	51	**2KJ3105 - ■ GJ23 - ■ ■ N1**	
	81	470	17.95	4 880	0.96	51	**2KJ3105 - ■ GJ23 - ■ ■ M1**	
	96	400	15.27	3 960	1.1	51	**2KJ3105 - ■ GJ23 - ■ ■ L1**	
	112	340	13.09	4 470	1.3	51	**2KJ3105 - ■ GJ23 - ■ ■ K1**	
	127	300	11.51	4 620	1.5	51	**2KJ3105 - ■ GJ23 - ■ ■ J1**	
	150	250	9.71	4 500	1.8	51	**2KJ3105 - ■ GJ23 - ■ ■ H1**	
	173	220	8.46	4 370	2.0	51	**2KJ3105 - ■ GJ23 - ■ ■ G1**	
	181	210	8.07	4 280	1.9	51	**2KJ3105 - ■ GJ23 - ■ ■ F1**	
	213	179	6.86	4 140	2.3	51	**2KJ3105 - ■ GJ23 - ■ ■ E1**	
	248	154	5.88	4 000	2.7	51	**2KJ3105 - ■ GJ23 - ■ ■ D1**	
	282	135	5.17	3 880	3.0	51	**2KJ3105 - ■ GJ23 - ■ ■ C1**	

Article No. supplement		
Shaft design	**1 or 9**	➞ page 10/43
Frequency and voltage	**2 or 9**	➞ page 11/2
Gearbox mounting type	**A, B, F or H**	➞ page 10/37

© Siemens AG 2017

3

Selection and ordering data (continued)

P_{rated}	n_2	T_2	i	F_{R2}	f_B	m	Article No.	Order code
kW	rpm	Nm	-	N	-	kg	(Article No. supplement ➞ below)	No. of poles
4	**Z.59-LE112ZMKB4P**							
	335	114	4.36	3 720	3.6	51	**2KJ3105 - ■ GJ23 - ■ ■ B1**	
	384	99	3.80	3 600	4.1	51	**2KJ3105 - ■ GJ23 - ■ ■ A1**	
	Z.49-LE112ZMKB4P							
	104	365	13.98	3 670	0.87	49	**2KJ3104 - ■ GJ23 - ■ ■ M1**	
	122	310	11.97	3 630	1.0	49	**2KJ3104 - ■ GJ23 - ■ ■ L1**	
	139	275	10.53	3 560	1.2	49	**2KJ3104 - ■ GJ23 - ■ ■ K1**	
	164	230	8.88	3 490	1.4	49	**2KJ3104 - ■ GJ23 - ■ ■ J1**	
	189	200	7.74	3 410	1.6	49	**2KJ3104 - ■ GJ23 - ■ ■ H1**	
	191	200	7.64	3 320	1.5	49	**2KJ3104 - ■ GJ23 - ■ ■ G1**	
	202	189	7.21	3 290	1.5	49	**2KJ3104 - ■ GJ23 - ■ ■ F1**	
	238	161	6.14	3 190	1.6	49	**2KJ3104 - ■ GJ23 - ■ ■ E1**	
	278	138	5.26	2 670	1.8	49	**2KJ3104 - ■ GJ23 - ■ ■ D1**	
	316	121	4.62	2 900	1.9	49	**2KJ3104 - ■ GJ23 - ■ ■ C1**	
	374	102	3.90	2 900	2.0	49	**2KJ3104 - ■ GJ23 - ■ ■ B1**	
	429	89	3.40	2 810	2.1	49	**2KJ3104 - ■ GJ23 - ■ ■ A1**	
	E.129-LE112ZMKB4P							
	149	255	9.79	13 500	2.6	114	**2KJ3006 - ■ GJ23 - ■ ■ T1**	
	174	215	8.38	13 500	3.0	114	**2KJ3006 - ■ GJ23 - ■ ■ S1**	
	185	205	7.88	13 500	3.2	114	**2KJ3006 - ■ GJ23 - ■ ■ R1**	
	198	193	7.39	13 500	4.1	114	**2KJ3006 - ■ GJ23 - ■ ■ Q1**	
	E.109-LE112ZMKB4P							
	203	188	7.19	10 500	3.0	89	**2KJ3005 - ■ GJ23 - ■ ■ Q1**	
	216	177	6.76	10 500	3.2	89	**2KJ3005 - ■ GJ23 - ■ ■ P1**	
	232	164	6.28	10 500	3.4	89	**2KJ3005 - ■ GJ23 - ■ ■ N1**	
	263	145	5.55	10 500	3.9	89	**2KJ3005 - ■ GJ23 - ■ ■ M1**	
	295	130	4.95	10 500	4.3	89	**2KJ3005 - ■ GJ23 - ■ ■ L1**	
	327	117	4.46	10 500	4.8	89	**2KJ3005 - ■ GJ23 - ■ ■ K1**	
	E.89-LE112ZMKB4P							
	151	250	9.67	8 000	1.1	65	**2KJ3004 - ■ GJ23 - ■ ■ T1**	
	167	225	8.73	8 000	1.2	65	**2KJ3004 - ■ GJ23 - ■ ■ S1**	
	184	205	7.92	8 000	1.4	65	**2KJ3004 - ■ GJ23 - ■ ■ R1**	
	200	191	7.31	8 000	1.4	65	**2KJ3004 - ■ GJ23 - ■ ■ Q1**	
	220	174	6.64	8 000	1.5	65	**2KJ3004 - ■ GJ23 - ■ ■ P1**	
	260	147	5.62	8 000	2.2	65	**2KJ3004 - ■ GJ23 - ■ ■ N1**	
	276	138	5.29	8 000	1.5	65	**2KJ3004 - ■ GJ23 - ■ ■ M1**	
	299	128	4.89	8 000	2.8	65	**2KJ3004 - ■ GJ23 - ■ ■ L1**	
	336	114	4.35	8 000	3.2	65	**2KJ3004 - ■ GJ23 - ■ ■ K1**	
	378	101	3.86	8 000	3.6	65	**2KJ3004 - ■ GJ23 - ■ ■ J1**	
	422	90	3.46	8 000	4.0	65	**2KJ3004 - ■ GJ23 - ■ ■ H1**	
	493	77	2.96	8 000	4.6	65	**2KJ3004 - ■ GJ23 - ■ ■ G1**	
	553	69	2.64	8 000	5.2	65	**2KJ3004 - ■ GJ23 - ■ ■ F1**	
	627	61	2.33	8 000	5.9	65	**2KJ3004 - ■ GJ23 - ■ ■ E1**	
	E.69-LE112ZMKB4P							
	193	198	7.58	6 100	1.0	52	**2KJ3003 - ■ GJ23 - ■ ■ Q1**	
	214	178	6.82	6 100	0.95	52	**2KJ3003 - ■ GJ23 - ■ ■ P1**	
	237	161	6.17	6 100	1.3	52	**2KJ3003 - ■ GJ23 - ■ ■ N1**	
	257	149	5.69	6 100	1.1	52	**2KJ3003 - ■ GJ23 - ■ ■ M1**	
	280	136	5.21	6 100	1.5	52	**2KJ3003 - ■ GJ23 - ■ ■ L1**	
	333	115	4.38	6 100	1.7	52	**2KJ3003 - ■ GJ23 - ■ ■ K1**	

Article No. supplement		
Shaft design	**1 or 9**	➞ page 10/43
Frequency and voltage	**2 or 9**	➞ page 11/2
Gearbox mounting type	**A, B, F or H**	➞ page 10/37

© Siemens AG 2017

Selection and ordering data (continued)

P_{rated}	n_2	T_2	i	F_{R2}	f_B	m	Article No.	Order code
kW	rpm	Nm	-	N	-	kg	(Article No. supplement ➞ below)	No. of poles
4	**E.69-LE112ZMKB4P**							
	354	108	4.12	6 100	1.5	52	**2KJ3003 - ■ GJ23 - ■ ■ J1**	
	386	99	3.78	6 100	2.0	52	**2KJ3003 - ■ GJ23 - ■ ■ H1**	
	442	86	3.30	6 100	2.3	52	**2KJ3003 - ■ GJ23 - ■ ■ G1**	
	495	77	2.95	6 100	2.6	52	**2KJ3003 - ■ GJ23 - ■ ■ F1**	
	566	68	2.58	6 100	2.9	52	**2KJ3003 - ■ GJ23 - ■ ■ E1**	
	658	58	2.22	6 100	3.4	52	**2KJ3003 - ■ GJ23 - ■ ■ D1**	
	745	51	1.96	6 100	3.8	52	**2KJ3003 - ■ GJ23 - ■ ■ C1**	
	874	44	1.67	6 100	4.5	52	**2KJ3003 - ■ GJ23 - ■ ■ B1**	
	1 021	37	1.43	6 100	5.2	52	**2KJ3003 - ■ GJ23 - ■ ■ A1**	
	E.49-LE112ZMKB4P							
	322	119	4.54	3 790	0.86	45	**2KJ3002 - ■ GJ23 - ■ ■ K1**	
	353	108	4.14	3 920	0.94	45	**2KJ3002 - ■ GJ23 - ■ ■ J1**	
	424	90	3.44	3 800	1.1	45	**2KJ3002 - ■ GJ23 - ■ ■ H1**	
	451	85	3.24	3 750	1.2	45	**2KJ3002 - ■ GJ23 - ■ ■ G1**	
	477	80	3.06	3 700	1.3	45	**2KJ3002 - ■ GJ23 - ■ ■ F1**	
	562	68	2.60	3 550	1.5	45	**2KJ3002 - ■ GJ23 - ■ ■ E1**	
	655	58	2.23	3 410	1.7	45	**2KJ3002 - ■ GJ23 - ■ ■ D1**	
	745	51	1.96	3 290	2.0	45	**2KJ3002 - ■ GJ23 - ■ ■ C1**	
	885	43	1.65	3 140	2.4	45	**2KJ3002 - ■ GJ23 - ■ ■ B1**	
	1 014	38	1.44	3 010	2.7	45	**2KJ3002 - ■ GJ23 - ■ ■ A1**	
	E.39-LE112ZMKB4P							
	498	77	2.93	905	0.85	40	**2KJ3001 - ■ GJ23 - ■ ■ G1**	
	973	39	1.50	1 580	1.6	40	**2KJ3001 - ■ GJ23 - ■ ■ B1**	
	1 132	34	1.29	1 580	1.6	40	**2KJ3001 - ■ GJ23 - ■ ■ A1**	
5.5	**D.189-LE132ZMS6P**							
	3.1	16 900	313.63	107 000	1.1	700	**2KJ3214 - ■ HL23 - ■ ■ T1**	**P01**
	3.5	15 100	280.59	107 000	1.3	700	**2KJ3214 - ■ HL23 - ■ ■ S1**	**P01**
	3.8	13 700	253.06	107 000	1.4	700	**2KJ3214 - ■ HL23 - ■ ■ R1**	**P01**
	4.3	12 100	223.66	107 000	1.6	700	**2KJ3214 - ■ HL23 - ■ ■ Q1**	**P01**
	D.189-LE132ZST4P							
	4.7	11 200	313.63	107 000	1.7	700	**2KJ3214 - ■ HJ23 - ■ ■ T1**	
	5.2	10 000	280.59	107 000	1.9	700	**2KJ3214 - ■ HJ23 - ■ ■ S1**	
	5.8	9 070	253.06	107 000	2.1	700	**2KJ3214 - ■ HJ23 - ■ ■ R1**	
	D.169-LE132ZMS6P							
	3.2	16 500	305.28	69 200	0.85	487	**2KJ3213 - ■ HL23 - ■ ■ U1**	**P01**
	3.6	14 600	271.40	69 900	0.95	487	**2KJ3213 - ■ HL23 - ■ ■ T1**	**P01**
	4.0	13 100	243.68	70 500	1.1	487	**2KJ3213 - ■ HL23 - ■ ■ S1**	**P01**
	D.169-LE132ZST4P							
	4.5	11 700	327.18	71 000	1.2	487	**2KJ3213 - ■ HJ23 - ■ ■ V1**	
	4.8	10 900	305.28	71 300	1.3	487	**2KJ3213 - ■ HJ23 - ■ ■ U1**	
	5.4	9 730	271.40	71 700	1.4	487	**2KJ3213 - ■ HJ23 - ■ ■ T1**	
	6.0	8 730	243.68	72 100	1.6	487	**2KJ3213 - ■ HJ23 - ■ ■ S1**	
	6.6	7 900	220.58	72 400	1.8	487	**2KJ3213 - ■ HJ23 - ■ ■ R1**	
	7.6	6 940	193.75	72 800	2.0	487	**2KJ3213 - ■ HJ23 - ■ ■ Q1**	
	D.149-LE132ZST4P							
	5.5	9 480	264.51	50 400	0.84	309	**2KJ3212 - ■ HJ23 - ■ ■ U1**	
	5.9	8 890	247.95	50 700	0.90	309	**2KJ3212 - ■ HJ23 - ■ ■ T1**	
	6.7	7 880	219.80	51 200	1.0	309	**2KJ3212 - ■ HJ23 - ■ ■ S1**	
	7.5	7 000	195.24	51 600	1.1	309	**2KJ3212 - ■ HJ23 - ■ ■ R1**	

Article No. supplement		
Shaft design	**1 or 9**	➞ page 10/43
Frequency and voltage	**2 or 9**	➞ page 11/2
Gearbox mounting type	**A, B, F or H**	➞ page 10/37

© Siemens AG 2017

3

Selection and ordering data (continued)

P_{rated}	n_2	T_2	i	F_{R2}	f_B	m	Article No.	Order code
kW	rpm	Nm	-	N	-	kg	(Article No. supplement ➞ below)	No. of poles
5.5	**D.149-LE132ZST4P**							
	8.3	6 310	176.18	52 000	1.3	309	**2KJ3212 - ■ HJ23 - ■ ■ Q1**	
	9.4	5 590	156.11	52 300	1.4	309	**2KJ3212 - ■ HJ23 - ■ ■ P1**	
	11	4 950	138.26	52 600	1.6	309	**2KJ3212 - ■ HJ23 - ■ ■ N1**	
	12	4 410	123.04	52 900	1.8	309	**2KJ3212 - ■ HJ23 - ■ ■ M1**	
	13	3 950	110.26	53 100	2.0	309	**2KJ3212 - ■ HJ23 - ■ ■ L1**	
	D.129-LE132ZST4P							
	8.7	6 010	167.63	26 400	0.83	224	**2KJ3211 - ■ HJ23 - ■ ■ J1**	
	10	5 210	145.49	26 900	0.96	224	**2KJ3211 - ■ HJ23 - ■ ■ H1**	
	11	4 690	130.84	27 200	1.1	224	**2KJ3211 - ■ HJ23 - ■ ■ G1**	
	13	4 100	114.36	27 500	1.2	224	**2KJ3211 - ■ HJ23 - ■ ■ F1**	
	14	3 650	102.05	27 800	1.4	224	**2KJ3211 - ■ HJ23 - ■ ■ E1**	
	16	3 220	89.91	28 100	1.6	224	**2KJ3211 - ■ HJ23 - ■ ■ D1**	
	19	2 820	78.78	28 300	1.8	224	**2KJ3211 - ■ HJ23 - ■ ■ C1**	
	Z.129-LE132ZST4P							
	23	2 240	62.48	28 600	2.2	220	**2KJ3111 - ■ HJ23 - ■ ■ X1**	
	D.109-LE132ZST4P							
	14	3 820	106.70	20 000	0.81	160	**2KJ3210 - ■ HJ23 - ■ ■ G1**	
	15	3 410	95.28	20 200	0.91	160	**2KJ3210 - ■ HJ23 - ■ ■ F1**	
	17	3 010	84.21	20 200	1.0	160	**2KJ3210 - ■ HJ23 - ■ ■ E1**	
	20	2 650	73.90	20 200	1.2	160	**2KJ3210 - ■ HJ23 - ■ ■ D1**	
	23	2 300	64.34	20 200	1.3	160	**2KJ3210 - ■ HJ23 - ■ ■ C1**	
	Z.109-LE132ZST4P							
	29	1 830	51.17	20 200	1.7	158	**2KJ3110 - ■ HJ23 - ■ ■ X1**	
	34	1 560	43.64	20 200	2.0	158	**2KJ3110 - ■ HJ23 - ■ ■ W1**	
	36	1 470	41.07	20 200	2.1	158	**2KJ3110 - ■ HJ23 - ■ ■ V1**	
	38	1 360	38.12	20 200	2.3	158	**2KJ3110 - ■ HJ23 - ■ ■ U1**	
	43	1 200	33.70	20 200	2.6	158	**2KJ3110 - ■ HJ23 - ■ ■ T1**	
	D.89-LE132ZST4P							
	26	2 000	55.84	18 500	0.84	119	**2KJ3208 - ■ HJ23 - ■ ■ B1**	
	31	1 710	47.87	18 500	0.98	119	**2KJ3208 - ■ HJ23 - ■ ■ A1**	
	Z.89-LE132ZST4P							
	37	1 410	39.41	18 500	1.2	118	**2KJ3108 - ■ HJ23 - ■ ■ U1**	
	44	1 190	33.38	18 500	1.4	118	**2KJ3108 - ■ HJ23 - ■ ■ T1**	
	47	1 120	31.41	18 500	1.5	118	**2KJ3108 - ■ HJ23 - ■ ■ S1**	
	50	1 040	29.01	18 500	1.6	118	**2KJ3108 - ■ HJ23 - ■ ■ R1**	
	57	925	25.81	18 500	1.8	118	**2KJ3108 - ■ HJ23 - ■ ■ Q1**	
	64	820	22.92	18 500	2.0	118	**2KJ3108 - ■ HJ23 - ■ ■ P1**	
	71	735	20.52	18 500	2.3	118	**2KJ3108 - ■ HJ23 - ■ ■ N1**	
	84	625	17.54	18 500	2.7	118	**2KJ3108 - ■ HJ23 - ■ ■ M1**	
	94	560	15.66	18 400	3.0	118	**2KJ3108 - ■ HJ23 - ■ ■ L1**	
	106	495	13.84	17 800	3.4	118	**2KJ3108 - ■ HJ23 - ■ ■ K1**	
	121	435	12.15	17 200	3.7	118	**2KJ3108 - ■ HJ23 - ■ ■ J1**	
	213	245	6.89	14 600	4.3	118	**2KJ3108 - ■ HJ23 - ■ ■ E1**	
	Z.79-LE132ZST4P							
	57	915	25.62	13 100	0.91	96	**2KJ3107 - ■ HJ23 - ■ ■ R1**	
	61	865	24.12	12 900	0.97	96	**2KJ3107 - ■ HJ23 - ■ ■ Q1**	
	66	790	22.13	12 700	1.1	96	**2KJ3107 - ■ HJ23 - ■ ■ P1**	
	76	690	19.33	12 400	1.2	96	**2KJ3107 - ■ HJ23 - ■ ■ N1**	
	85	620	17.31	8 480	1.4	96	**2KJ3107 - ■ HJ23 - ■ ■ M1**	

Article No. supplement		
Shaft design	**1 or 9**	➞ page 10/43
Frequency and voltage	**2 or 9**	➞ page 11/2
Gearbox mounting type	**A, B, F or H**	➞ page 10/37

© Siemens AG 2017

Selection and ordering data (continued)

P_{rated}	n_2	T_2	i	F_{R2}	f_B	m	Article No.	Order code
kW	rpm	Nm	-	N	-	kg	(Article No. supplement ➞ below)	No. of poles
5.5	**Z.79-LE132ZST4P**							
	97	540	15.13	8 910	1.5	96	**2KJ3107 - ■ HJ23 - ■ ■ L1**	
	113	465	12.99	9 190	1.8	96	**2KJ3107 - ■ HJ23 - ■ ■ K1**	
	128	410	11.48	9 370	2.0	96	**2KJ3107 - ■ HJ23 - ■ ■ J1**	
	150	350	9.76	9 450	2.3	96	**2KJ3107 - ■ HJ23 - ■ ■ H1**	
	175	300	8.37	9 470	2.6	96	**2KJ3107 - ■ HJ23 - ■ ■ G1**	
	179	290	8.19	8 530	2.4	96	**2KJ3107 - ■ HJ23 - ■ ■ F1**	
	205	255	7.16	8 570	2.8	96	**2KJ3107 - ■ HJ23 - ■ ■ E1**	
	238	220	6.15	8 550	3.2	96	**2KJ3107 - ■ HJ23 - ■ ■ D1**	
	270	195	5.43	8 510	3.5	96	**2KJ3107 - ■ HJ23 - ■ ■ C1**	
	317	166	4.62	8 410	4.7	96	**2KJ3107 - ■ HJ23 - ■ ■ B1**	
	Z.69-LE132ZST4P							
	72	725	20.34	10 300	0.82	86	**2KJ3106 - ■ HJ23 - ■ ■ N1**	
	76	685	19.21	10 200	0.87	86	**2KJ3106 - ■ HJ23 - ■ ■ M1**	
	90	585	16.34	9 890	1.0	86	**2KJ3106 - ■ HJ23 - ■ ■ L1**	
	105	500	14.00	7 210	1.2	86	**2KJ3106 - ■ HJ23 - ■ ■ K1**	
	119	440	12.31	7 700	1.4	86	**2KJ3106 - ■ HJ23 - ■ ■ J1**	
	141	370	10.39	8 200	1.6	86	**2KJ3106 - ■ HJ23 - ■ ■ H1**	
	162	320	9.05	8 510	1.8	86	**2KJ3106 - ■ HJ23 - ■ ■ G1**	
	172	305	8.50	7 090	1.5	86	**2KJ3106 - ■ HJ23 - ■ ■ F1**	
	203	255	7.23	7 560	1.7	86	**2KJ3106 - ■ HJ23 - ■ ■ E1**	
	236	220	6.20	7 730	2.0	86	**2KJ3106 - ■ HJ23 - ■ ■ D1**	
	269	195	5.45	7 520	2.2	86	**2KJ3106 - ■ HJ23 - ■ ■ C1**	
	318	165	4.60	7 170	2.7	86	**2KJ3106 - ■ HJ23 - ■ ■ B1**	
	365	144	4.01	6 890	3.1	86	**2KJ3106 - ■ HJ23 - ■ ■ A1**	
	Z.59-LE132ZST4P							
	96	545	15.27	4 220	0.82	81	**2KJ3105 - ■ HJ23 - ■ ■ L1**	
	112	465	13.09	4 220	0.96	81	**2KJ3105 - ■ HJ23 - ■ ■ K1**	
	127	410	11.51	4 180	1.1	81	**2KJ3105 - ■ HJ23 - ■ ■ J1**	
	151	345	9.71	3 370	1.3	81	**2KJ3105 - ■ HJ23 - ■ ■ H1**	
	173	300	8.46	3 750	1.5	81	**2KJ3105 - ■ HJ23 - ■ ■ G1**	
	182	285	8.07	2 750	1.4	81	**2KJ3105 - ■ HJ23 - ■ ■ F1**	
	214	245	6.86	3 150	1.7	81	**2KJ3105 - ■ HJ23 - ■ ■ E1**	
	249	210	5.88	3 490	1.9	81	**2KJ3105 - ■ HJ23 - ■ ■ D1**	
	283	185	5.17	3 670	2.2	81	**2KJ3105 - ■ HJ23 - ■ ■ C1**	
	336	156	4.36	3 540	2.6	81	**2KJ3105 - ■ HJ23 - ■ ■ B1**	
	386	136	3.80	3 440	3.0	81	**2KJ3105 - ■ HJ23 - ■ ■ A1**	
	Z.49-LE132ZST4P							
	139	375	10.53	3 160	0.85	79	**2KJ3104 - ■ HJ23 - ■ ■ K1**	
	165	315	8.88	3 150	1.0	79	**2KJ3104 - ■ HJ23 - ■ ■ J1**	
	189	275	7.74	3 110	1.2	79	**2KJ3104 - ■ HJ23 - ■ ■ H1**	
	192	270	7.64	3 010	1.1	79	**2KJ3104 - ■ HJ23 - ■ ■ G1**	
	203	255	7.21	3 000	1.1	79	**2KJ3104 - ■ HJ23 - ■ ■ F1**	
	239	220	6.14	2 930	1.2	79	**2KJ3104 - ■ HJ23 - ■ ■ E1**	
	279	189	5.26	2 870	1.3	79	**2KJ3104 - ■ HJ23 - ■ ■ D1**	
	317	166	4.62	2 820	1.4	79	**2KJ3104 - ■ HJ23 - ■ ■ C1**	
	376	140	3.90	2 730	1.5	79	**2KJ3104 - ■ HJ23 - ■ ■ B1**	
	431	122	3.40	2 210	1.6	79	**2KJ3104 - ■ HJ23 - ■ ■ A1**	

Article No. supplement		
Shaft design	**1 or 9**	➞ page 10/43
Frequency and voltage	**2 or 9**	➞ page 11/2
Gearbox mounting type	**A, B, F or H**	➞ page 10/37

© Siemens AG 2017

3

Selection and ordering data (continued)

P_{rated}	n_2	T_2	i	F_{R2}	f_B	m	Article No.	Order code
kW	rpm	Nm	-	N	-	kg	(Article No. supplement ➞ below)	No. of poles
5.5	**E.149-LE132ZST4P**							
	150	350	9.76	16 000	3.4	182	**2KJ3007 - ■ HJ23 - ■ ■ S1**	
	161	325	9.11	16 000	3.9	182	**2KJ3007 - ■ HJ23 - ■ ■ R1**	
	E.129-LE132ZST4P							
	150	350	9.79	13 500	1.9	144	**2KJ3006 - ■ HJ23 - ■ ■ T1**	
	175	300	8.38	13 500	2.2	144	**2KJ3006 - ■ HJ23 - ■ ■ S1**	
	186	280	7.88	13 500	2.4	144	**2KJ3006 - ■ HJ23 - ■ ■ R1**	
	198	265	7.39	13 500	3.0	144	**2KJ3006 - ■ HJ23 - ■ ■ Q1**	
	224	235	6.55	13 500	3.4	144	**2KJ3006 - ■ HJ23 - ■ ■ P1**	
	252	205	5.82	13 500	3.8	144	**2KJ3006 - ■ HJ23 - ■ ■ N1**	
	279	188	5.25	13 500	4.2	144	**2KJ3006 - ■ HJ23 - ■ ■ M1**	
	315	167	4.65	13 500	4.8	144	**2KJ3006 - ■ HJ23 - ■ ■ L1**	
	356	148	4.12	13 500	5.3	144	**2KJ3006 - ■ HJ23 - ■ ■ K1**	
	E.109-LE132ZST4P							
	204	255	7.19	10 500	2.2	119	**2KJ3005 - ■ HJ23 - ■ ■ Q1**	
	217	240	6.76	10 500	2.3	119	**2KJ3005 - ■ HJ23 - ■ ■ P1**	
	233	225	6.28	10 500	2.5	119	**2KJ3005 - ■ HJ23 - ■ ■ N1**	
	264	199	5.55	10 500	2.8	119	**2KJ3005 - ■ HJ23 - ■ ■ M1**	
	296	177	4.95	10 500	3.2	119	**2KJ3005 - ■ HJ23 - ■ ■ L1**	
	328	160	4.46	10 500	3.5	119	**2KJ3005 - ■ HJ23 - ■ ■ K1**	
	379	139	3.87	10 500	4.0	119	**2KJ3005 - ■ HJ23 - ■ ■ J1**	
	421	125	3.48	10 500	4.4	119	**2KJ3005 - ■ HJ23 - ■ ■ H1**	
	482	109	3.04	10 500	5.0	119	**2KJ3005 - ■ HJ23 - ■ ■ G1**	
	541	97	2.71	10 500	5.6	119	**2KJ3005 - ■ HJ23 - ■ ■ F1**	
	E.89-LE132ZST4P							
	221	235	6.64	8 000	1.1	96	**2KJ3004 - ■ HJ23 - ■ ■ P1**	
	261	200	5.62	8 000	1.6	96	**2KJ3004 - ■ HJ23 - ■ ■ N1**	
	277	190	5.29	8 000	1.1	96	**2KJ3004 - ■ HJ23 - ■ ■ M1**	
	300	175	4.89	8 000	2.1	96	**2KJ3004 - ■ HJ23 - ■ ■ L1**	
	337	156	4.35	8 000	2.3	96	**2KJ3004 - ■ HJ23 - ■ ■ K1**	
	380	138	3.86	8 000	2.6	96	**2KJ3004 - ■ HJ23 - ■ ■ J1**	
	423	124	3.46	8 000	2.9	96	**2KJ3004 - ■ HJ23 - ■ ■ H1**	
	495	106	2.96	8 000	3.4	96	**2KJ3004 - ■ HJ23 - ■ ■ G1**	
	555	95	2.64	8 000	3.8	96	**2KJ3004 - ■ HJ23 - ■ ■ F1**	
	629	84	2.33	8 000	4.3	96	**2KJ3004 - ■ HJ23 - ■ ■ E1**	
	715	74	2.05	7 920	4.9	96	**2KJ3004 - ■ HJ23 - ■ ■ D1**	
	823	64	1.78	7 640	5.7	96	**2KJ3004 - ■ HJ23 - ■ ■ C1**	
	964	54	1.52	7 320	6.6	96	**2KJ3004 - ■ HJ23 - ■ ■ B1**	
	E.69-LE132ZST4P							
	281	187	5.21	6 100	1.1	82	**2KJ3003 - ■ HJ23 - ■ ■ L1**	
	334	157	4.38	6 100	1.3	82	**2KJ3003 - ■ HJ23 - ■ ■ K1**	
	356	148	4.12	6 100	1.1	82	**2KJ3003 - ■ HJ23 - ■ ■ J1**	
	388	136	3.78	6 100	1.5	82	**2KJ3003 - ■ HJ23 - ■ ■ H1**	
	444	118	3.30	6 100	1.7	82	**2KJ3003 - ■ HJ23 - ■ ■ G1**	
	497	106	2.95	6 100	1.9	82	**2KJ3003 - ■ HJ23 - ■ ■ F1**	
	568	92	2.58	6 100	2.1	82	**2KJ3003 - ■ HJ23 - ■ ■ E1**	
	660	80	2.22	6 100	2.5	82	**2KJ3003 - ■ HJ23 - ■ ■ D1**	
	747	70	1.96	6 100	2.8	82	**2KJ3003 - ■ HJ23 - ■ ■ C1**	
	877	60	1.67	6 100	3.3	82	**2KJ3003 - ■ HJ23 - ■ ■ B1**	
	1 024	51	1.43	6 100	3.8	82	**2KJ3003 - ■ HJ23 - ■ ■ A1**	

Article No. supplement		
Shaft design	**1 or 9**	➞ page 10/43
Frequency and voltage	**2 or 9**	➞ page 11/2
Gearbox mounting type	**A, B, F or H**	➞ page 10/37

© Siemens AG 2017

Selection and ordering data (continued)

P_{rated} kW	n_2 rpm	T_2 Nm	i -	F_{R2} N	f_B -	m kg	Article No. (Article No. supplement ➞ below)	Order code No. of poles
5.5	**E.49-LE132ZST4P**							
	426	123	3.44	2 540	0.82	75	**2KJ3002 - ■ HJ23 - ■ ■ H1**	
	452	116	3.24	2 690	0.87	75	**2KJ3002 - ■ HJ23 - ■ ■ G1**	
	479	110	3.06	2 800	0.92	75	**2KJ3002 - ■ HJ23 - ■ ■ F1**	
	563	93	2.60	2 950	1.1	75	**2KJ3002 - ■ HJ23 - ■ ■ E1**	
	747	70	1.96	3 060	1.5	75	**2KJ3002 - ■ HJ23 - ■ ■ C1**	
	888	59	1.65	3 010	1.7	75	**2KJ3002 - ■ HJ23 - ■ ■ B1**	
	1 017	52	1.44	2 900	2.0	75	**2KJ3002 - ■ HJ23 - ■ ■ A1**	
7.5	**D.189-LE132ZMS4P**							
	4.7	15 200	313.63	107 000	1.2	700	**2KJ3214 - ■ HL23 - ■ ■ T1**	
	5.2	13 600	280.59	107 000	1.4	700	**2KJ3214 - ■ HL23 - ■ ■ S1**	
	5.8	12 300	253.06	107 000	1.5	700	**2KJ3214 - ■ HL23 - ■ ■ R1**	
	6.6	10 800	223.66	107 000	1.7	700	**2KJ3214 - ■ HL23 - ■ ■ Q1**	
	7.2	9 960	204.44	107 000	1.9	700	**2KJ3214 - ■ HL23 - ■ ■ P1**	
	8.0	8 960	183.92	107 000	2.1	700	**2KJ3214 - ■ HL23 - ■ ■ N1**	
	D.169-LE132ZMS4P							
	4.5	15 900	327.18	69 400	0.88	487	**2KJ3213 - ■ HL23 - ■ ■ V1**	
	4.8	14 800	305.28	69 800	0.94	487	**2KJ3213 - ■ HL23 - ■ ■ U1**	
	5.4	13 200	271.40	70 400	1.1	487	**2KJ3213 - ■ HL23 - ■ ■ T1**	
	6.0	11 800	243.68	70 900	1.2	487	**2KJ3213 - ■ HL23 - ■ ■ S1**	
	6.7	10 700	220.58	71 300	1.3	487	**2KJ3213 - ■ HL23 - ■ ■ R1**	
	7.6	9 440	193.75	71 800	1.5	487	**2KJ3213 - ■ HL23 - ■ ■ Q1**	
	8.4	8 550	175.57	72 200	1.6	487	**2KJ3213 - ■ HL23 - ■ ■ P1**	
	9.4	7 610	156.36	72 500	1.8	487	**2KJ3213 - ■ HL23 - ■ ■ N1**	
	10	6 840	140.41	72 800	2.0	487	**2KJ3213 - ■ HL23 - ■ ■ M1**	
	D.149-LE132ZMS4P							
	7.5	9 510	195.24	50 400	0.84	309	**2KJ3212 - ■ HL23 - ■ ■ R1**	
	8.3	8 580	176.18	50 900	0.93	309	**2KJ3212 - ■ HL23 - ■ ■ Q1**	
	9.4	7 600	156.11	51 400	1.1	309	**2KJ3212 - ■ HL23 - ■ ■ P1**	
	11	6 730	138.26	51 800	1.2	309	**2KJ3212 - ■ HL23 - ■ ■ N1**	
	12	5 990	123.04	52 100	1.3	309	**2KJ3212 - ■ HL23 - ■ ■ M1**	
	13	5 370	110.26	52 400	1.5	309	**2KJ3212 - ■ HL23 - ■ ■ L1**	
	15	4 760	97.75	52 700	1.7	309	**2KJ3212 - ■ HL23 - ■ ■ K1**	
	17	4 200	86.29	53 000	1.9	309	**2KJ3212 - ■ HL23 - ■ ■ J1**	
	19	3 690	75.87	53 200	2.2	309	**2KJ3212 - ■ HL23 - ■ ■ H1**	
	21	3 340	68.71	53 400	2.4	309	**2KJ3212 - ■ HL23 - ■ ■ G1**	
	D.129-LE132ZMS4P							
	13	5 570	114.36	26 700	0.9	224	**2KJ3211 - ■ HL23 - ■ ■ F1**	
	14	4 970	102.05	27 000	1.0	224	**2KJ3211 - ■ HL23 - ■ ■ E1**	
	16	4 380	89.91	27 400	1.1	224	**2KJ3211 - ■ HL23 - ■ ■ D1**	
	19	3 830	78.78	27 700	1.3	224	**2KJ3211 - ■ HL23 - ■ ■ C1**	
	Z.129-LE132ZMS4P							
	24	3 040	62.48	28 200	1.6	220	**2KJ3111 - ■ HL23 - ■ ■ X1**	
	27	2 600	53.47	28 400	1.9	220	**2KJ3111 - ■ HL23 - ■ ■ W1**	
	29	2 450	50.33	28 500	2.0	220	**2KJ3111 - ■ HL23 - ■ ■ V1**	
	31	2 290	47.18	28 600	2.2	220	**2KJ3111 - ■ HL23 - ■ ■ U1**	
	35	2 030	41.82	28 800	2.5	220	**2KJ3111 - ■ HL23 - ■ ■ T1**	
	D.109-LE132ZMS4P							
	20	3 600	73.90	20 200	0.86	160	**2KJ3210 - ■ HL23 - ■ ■ D1**	
	23	3 130	64.34	20 200	0.99	160	**2KJ3210 - ■ HL23 - ■ ■ C1**	

Article No. supplement		
Shaft design	**1 or 9**	➞ page 10/43
Frequency and voltage	**2 or 9**	➞ page 11/2
Gearbox mounting type	**A, B, F or H**	➞ page 10/37

© Siemens AG 2017

3

Selection and ordering data (continued)

P_{rated}	n_2	T_2	i	F_{R2}	f_B	m	Article No.	Order code
kW	rpm	Nm	-	N	-	kg	(Article No. supplement ➞ below)	No. of poles
7.5	**Z.109-LE132ZMS4P**							
	29	2 490	51.17	20 200	1.2	158	**2KJ3110 - ■ HL23 - ■ ■ X1**	
	34	2 120	43.64	20 200	1.5	158	**2KJ3110 - ■ HL23 - ■ ■ W1**	
	36	2 000	41.07	20 200	1.5	158	**2KJ3110 - ■ HL23 - ■ ■ V1**	
	39	1 850	38.12	20 200	1.7	158	**2KJ3110 - ■ HL23 - ■ ■ U1**	
	44	1 640	33.70	20 200	1.9	158	**2KJ3110 - ■ HL23 - ■ ■ T1**	
	49	1 460	30.08	20 200	2.1	158	**2KJ3110 - ■ HL23 - ■ ■ S1**	
	54	1 310	27.07	20 200	2.3	158	**2KJ3110 - ■ HL23 - ■ ■ R1**	
	63	1 140	23.49	20 200	2.6	158	**2KJ3110 - ■ HL23 - ■ ■ Q1**	
	70	1 030	21.13	20 200	2.7	158	**2KJ3110 - ■ HL23 - ■ ■ P1**	
	80	900	18.47	20 200	3.0	158	**2KJ3110 - ■ HL23 - ■ ■ N1**	
	89	800	16.48	20 200	3.3	158	**2KJ3110 - ■ HL23 - ■ ■ M1**	
	Z.89-LE132ZMS4P							
	37	1 920	39.41	18 500	0.87	118	**2KJ3108 - ■ HL23 - ■ ■ U1**	
	44	1 620	33.38	18 500	1.0	118	**2KJ3108 - ■ HL23 - ■ ■ T1**	
	47	1 530	31.41	18 500	1.1	118	**2KJ3108 - ■ HL23 - ■ ■ S1**	
	51	1 410	29.01	18 500	1.2	118	**2KJ3108 - ■ HL23 - ■ ■ R1**	
	57	1 250	25.81	18 500	1.3	118	**2KJ3108 - ■ HL23 - ■ ■ Q1**	
	64	1 110	22.92	18 500	1.5	118	**2KJ3108 - ■ HL23 - ■ ■ P1**	
	72	1 000	20.52	18 500	1.7	118	**2KJ3108 - ■ HL23 - ■ ■ N1**	
	84	855	17.54	18 300	2.0	118	**2KJ3108 - ■ HL23 - ■ ■ M1**	
	94	760	15.66	17 800	2.2	118	**2KJ3108 - ■ HL23 - ■ ■ L1**	
	106	670	13.84	17 300	2.5	118	**2KJ3108 - ■ HL23 - ■ ■ K1**	
	121	590	12.15	16 700	2.8	118	**2KJ3108 - ■ HL23 - ■ ■ J1**	
	139	515	10.58	16 100	3.1	118	**2KJ3108 - ■ HL23 - ■ ■ H1**	
	163	440	9.04	15 400	3.5	118	**2KJ3108 - ■ HL23 - ■ ■ G1**	
	190	375	7.74	14 700	4.1	118	**2KJ3108 - ■ HL23 - ■ ■ F1**	
	213	335	6.89	14 300	3.1	118	**2KJ3108 - ■ HL23 - ■ ■ E1**	
	243	295	6.05	13 800	3.6	118	**2KJ3108 - ■ HL23 - ■ ■ D1**	
	279	255	5.26	13 200	4.1	118	**2KJ3108 - ■ HL23 - ■ ■ C1**	
	327	215	4.50	12 600	4.8	118	**2KJ3108 - ■ HL23 - ■ ■ B1**	
	Z.79-LE132ZMS4P							
	76	940	19.33	11 600	0.89	96	**2KJ3107 - ■ HL23 - ■ ■ N1**	
	85	840	17.31	11 400	1.0	96	**2KJ3107 - ■ HL23 - ■ ■ M1**	
	97	735	15.13	11 100	1.1	96	**2KJ3107 - ■ HL23 - ■ ■ L1**	
	113	630	12.99	10 700	1.3	96	**2KJ3107 - ■ HL23 - ■ ■ K1**	
	128	555	11.48	10 400	1.5	96	**2KJ3107 - ■ HL23 - ■ ■ J1**	
	151	475	9.76	10 000	1.7	96	**2KJ3107 - ■ HL23 - ■ ■ H1**	
	176	405	8.37	7 870	1.9	96	**2KJ3107 - ■ HL23 - ■ ■ G1**	
	179	395	8.19	6 570	1.8	96	**2KJ3107 - ■ HL23 - ■ ■ F1**	
	205	345	7.16	6 890	2.1	96	**2KJ3107 - ■ HL23 - ■ ■ E1**	
	239	300	6.15	7 060	2.4	96	**2KJ3107 - ■ HL23 - ■ ■ D1**	
	271	265	5.43	7 200	2.6	96	**2KJ3107 - ■ HL23 - ■ ■ C1**	
	318	225	4.62	7 300	3.4	96	**2KJ3107 - ■ HL23 - ■ ■ B1**	
	371	193	3.96	7 320	4.0	96	**2KJ3107 - ■ HL23 - ■ ■ A1**	
	Z.69-LE132ZMS4P							
	105	680	14.00	8 970	0.88	86	**2KJ3106 - ■ HL23 - ■ ■ K1**	
	119	600	12.31	8 760	1.0	86	**2KJ3106 - ■ HL23 - ■ ■ J1**	
	141	505	10.39	8 480	1.2	86	**2KJ3106 - ■ HL23 - ■ ■ H1**	

Article No. supplement		
Shaft design	**1 or 9**	➞ page 10/43
Frequency and voltage	**2 or 9**	➞ page 11/2
Gearbox mounting type	**A, B, F or H**	➞ page 10/37

© Siemens AG 2017

Selection and ordering data (continued)

P_{rated}	n_2	T_2	i	F_{R2}	f_B	m	Article No.	Order code
kW	rpm	Nm	-	N	-	kg	(Article No. supplement ➞ below)	No. of poles
7.5	**Z.69-LE132ZMS4P**							
	162	440	9.05	6 060	1.3	86	**2KJ3106 - ■ HL23 - ■ ■ G1**	
	173	410	8.50	8 100	1.1	86	**2KJ3106 - ■ HL23 - ■ ■ F1**	
	203	350	7.23	7 800	1.3	86	**2KJ3106 - ■ HL23 - ■ ■ E1**	
	237	300	6.20	5 730	1.5	86	**2KJ3106 - ■ HL23 - ■ ■ D1**	
	270	265	5.45	6 050	1.6	86	**2KJ3106 - ■ HL23 - ■ ■ C1**	
	320	220	4.60	6 470	2.0	86	**2KJ3106 - ■ HL23 - ■ ■ B1**	
	367	195	4.01	6 560	2.3	86	**2KJ3106 - ■ HL23 - ■ ■ A1**	
	Z.59-LE132ZMS4P							
	128	560	11.51	3 580	0.8	81	**2KJ3105 - ■ HL23 - ■ ■ J1**	
	151	470	9.71	3 620	0.95	81	**2KJ3105 - ■ HL23 - ■ ■ H1**	
	174	410	8.46	3 610	1.1	81	**2KJ3105 - ■ HL23 - ■ ■ G1**	
	182	390	8.07	3 520	1.0	81	**2KJ3105 - ■ HL23 - ■ ■ F1**	
	214	330	6.86	3 500	1.2	81	**2KJ3105 - ■ HL23 - ■ ■ E1**	
	250	285	5.88	3 440	1.4	81	**2KJ3105 - ■ HL23 - ■ ■ D1**	
	284	250	5.17	2 270	1.6	81	**2KJ3105 - ■ HL23 - ■ ■ C1**	
	337	210	4.36	2 720	1.9	81	**2KJ3105 - ■ HL23 - ■ ■ B1**	
	387	185	3.80	2 930	2.2	81	**2KJ3105 - ■ HL23 - ■ ■ A1**	
	Z.49-LE132ZMS4P							
	190	375	7.74	2 710	0.85	79	**2KJ3104 - ■ HL23 - ■ ■ H1**	
	204	350	7.21	2 580	0.83	79	**2KJ3104 - ■ HL23 - ■ ■ F1**	
	239	295	6.14	2 610	0.89	79	**2KJ3104 - ■ HL23 - ■ ■ E1**	
	279	255	5.26	2 580	0.96	79	**2KJ3104 - ■ HL23 - ■ ■ D1**	
	318	225	4.62	2 560	1.0	79	**2KJ3104 - ■ HL23 - ■ ■ C1**	
	377	190	3.90	2 510	1.1	79	**2KJ3104 - ■ HL23 - ■ ■ B1**	
	432	166	3.40	2 470	1.2	79	**2KJ3104 - ■ HL23 - ■ ■ A1**	
	E.149-LE132ZMS4P							
	151	475	9.76	16 000	2.5	182	**2KJ3007 - ■ HL23 - ■ ■ S1**	
	161	440	9.11	16 000	2.8	182	**2KJ3007 - ■ HL23 - ■ ■ R1**	
	181	395	8.10	16 000	3.4	182	**2KJ3007 - ■ HL23 - ■ ■ Q1**	
	202	350	7.27	16 000	3.8	182	**2KJ3007 - ■ HL23 - ■ ■ P1**	
	223	320	6.58	16 000	4.1	182	**2KJ3007 - ■ HL23 - ■ ■ N1**	
	E.129-LE132ZMS4P							
	150	475	9.79	13 500	1.4	144	**2KJ3006 - ■ HL23 - ■ ■ T1**	
	175	405	8.38	13 500	1.6	144	**2KJ3006 - ■ HL23 - ■ ■ S1**	
	187	380	7.88	13 500	1.7	144	**2KJ3006 - ■ HL23 - ■ ■ R1**	
	199	360	7.39	13 500	2.2	144	**2KJ3006 - ■ HL23 - ■ ■ Q1**	
	224	315	6.55	13 500	2.5	144	**2KJ3006 - ■ HL23 - ■ ■ P1**	
	253	280	5.82	13 500	2.8	144	**2KJ3006 - ■ HL23 - ■ ■ N1**	
	280	255	5.25	13 500	3.1	144	**2KJ3006 - ■ HL23 - ■ ■ M1**	
	316	225	4.65	13 500	3.5	144	**2KJ3006 - ■ HL23 - ■ ■ L1**	
	357	200	4.12	13 500	3.9	144	**2KJ3006 - ■ HL23 - ■ ■ K1**	
	401	179	3.67	13 500	4.4	144	**2KJ3006 - ■ HL23 - ■ ■ J1**	
	447	160	3.29	13 200	4.9	144	**2KJ3006 - ■ HL23 - ■ ■ H1**	
	505	142	2.91	12 800	5.4	144	**2KJ3006 - ■ HL23 - ■ ■ G1**	
	E.109-LE132ZMS4P							
	204	350	7.19	10 500	1.6	119	**2KJ3005 - ■ HL23 - ■ ■ Q1**	
	217	325	6.76	10 500	1.7	119	**2KJ3005 - ■ HL23 - ■ ■ P1**	
	234	305	6.28	10 500	1.8	119	**2KJ3005 - ■ HL23 - ■ ■ N1**	
	265	270	5.55	10 500	2.1	119	**2KJ3005 - ■ HL23 - ■ ■ M1**	

Article No. supplement		
Shaft design	**1 or 9**	➞ page 10/43
Frequency and voltage	**2 or 9**	➞ page 11/2
Gearbox mounting type	**A, B, F or H**	➞ page 10/37

© Siemens AG 2017

3

Selection and ordering data (continued)

P_{rated}	n_2	T_2	i	F_{R2}	f_B	m	Article No.	Order code
kW	rpm	Nm	-	N	-	kg	(Article No. supplement ➞ below)	No. of poles
7.5	**E.109-LE132ZMS4P**							
	297	240	4.95	10 500	2.3	119	**2KJ3005 - ■ HL23 - ■ ■ L1**	
	330	215	4.46	10 500	2.6	119	**2KJ3005 - ■ HL23 - ■ ■ K1**	
	380	189	3.87	10 500	2.9	119	**2KJ3005 - ■ HL23 - ■ ■ J1**	
	422	170	3.48	10 500	3.2	119	**2KJ3005 - ■ HL23 - ■ ■ H1**	
	484	148	3.04	10 500	3.7	119	**2KJ3005 - ■ HL23 - ■ ■ G1**	
	542	132	2.71	10 500	4.1	119	**2KJ3005 - ■ HL23 - ■ ■ F1**	
	615	116	2.39	10 500	4.6	119	**2KJ3005 - ■ HL23 - ■ ■ E1**	
	700	102	2.10	10 500	5.2	119	**2KJ3005 - ■ HL23 - ■ ■ D1**	
	803	89	1.83	10 100	5.9	119	**2KJ3005 - ■ HL23 - ■ ■ C1**	
	880	81	1.67	9 900	6.5	119	**2KJ3005 - ■ HL23 - ■ ■ B1**	
	E.89-LE132ZMS4P							
	221	320	6.64	8 000	0.8	96	**2KJ3004 - ■ HL23 - ■ ■ P1**	
	262	270	5.62	8 000	1.2	96	**2KJ3004 - ■ HL23 - ■ ■ N1**	
	278	255	5.29	8 000	0.81	96	**2KJ3004 - ■ HL23 - ■ ■ M1**	
	301	235	4.89	8 000	1.5	96	**2KJ3004 - ■ HL23 - ■ ■ L1**	
	338	210	4.35	8 000	1.7	96	**2KJ3004 - ■ HL23 - ■ ■ K1**	
	381	188	3.86	8 000	1.9	96	**2KJ3004 - ■ HL23 - ■ ■ J1**	
	425	169	3.46	8 000	2.2	96	**2KJ3004 - ■ HL23 - ■ ■ H1**	
	497	144	2.96	8 000	2.5	96	**2KJ3004 - ■ HL23 - ■ ■ G1**	
	557	129	2.64	8 000	2.8	96	**2KJ3004 - ■ HL23 - ■ ■ F1**	
	631	114	2.33	7 990	3.2	96	**2KJ3004 - ■ HL23 - ■ ■ E1**	
	717	100	2.05	7 730	3.6	96	**2KJ3004 - ■ HL23 - ■ ■ D1**	
	826	87	1.78	7 460	4.2	96	**2KJ3004 - ■ HL23 - ■ ■ C1**	
	967	74	1.52	7 160	4.9	96	**2KJ3004 - ■ HL23 - ■ ■ B1**	
	1 131	63	1.30	6 880	5.7	96	**2KJ3004 - ■ HL23 - ■ ■ A1**	
	E.69-LE132ZMS4P							
	336	210	4.38	6 100	0.94	82	**2KJ3003 - ■ HL23 - ■ ■ K1**	
	357	200	4.12	6 100	0.82	82	**2KJ3003 - ■ HL23 - ■ ■ J1**	
	389	184	3.78	6 100	1.1	82	**2KJ3003 - ■ HL23 - ■ ■ H1**	
	445	161	3.30	6 100	1.2	82	**2KJ3003 - ■ HL23 - ■ ■ G1**	
	498	144	2.95	6 100	1.4	82	**2KJ3003 - ■ HL23 - ■ ■ F1**	
	570	126	2.58	6 100	1.6	82	**2KJ3003 - ■ HL23 - ■ ■ E1**	
	662	108	2.22	6 100	1.8	82	**2KJ3003 - ■ HL23 - ■ ■ D1**	
	750	96	1.96	6 100	2.1	82	**2KJ3003 - ■ HL23 - ■ ■ C1**	
	880	81	1.67	6 100	2.4	82	**2KJ3003 - ■ HL23 - ■ ■ B1**	
	1 028	70	1.43	6 100	2.8	82	**2KJ3003 - ■ HL23 - ■ ■ A1**	
	E.49-LE132ZMS4P							
	565	127	2.60	1 380	0.81	75	**2KJ3002 - ■ HL23 - ■ ■ E1**	
	10 21	70	1.44	2 050	1.5	75	**2KJ3002 - ■ HL23 - ■ ■ A1**	
9.2	**D.189-LE160MPA4P**							
	4.7	18 700	313.63	107 000	1.0	717	**2KJ3214 - ■ JQ23 - ■ ■ T1**	
	5.2	16 700	280.59	107 000	1.1	717	**2KJ3214 - ■ JQ23 - ■ ■ S1**	
	5.8	15 100	253.06	107 000	1.3	717	**2KJ3214 - ■ JQ23 - ■ ■ R1**	
	6.6	13 300	223.66	107 000	1.4	717	**2KJ3214 - ■ JQ23 - ■ ■ Q1**	
	7.2	12 200	204.44	107 000	1.6	717	**2KJ3214 - ■ JQ23 - ■ ■ P1**	
	8.0	10 900	183.92	107 000	1.7	717	**2KJ3214 - ■ JQ23 - ■ ■ N1**	
	8.9	9 820	164.36	107 000	1.9	717	**2KJ3214 - ■ JQ23 - ■ ■ M1**	
	9.9	8 880	148.63	107 000	2.1	717	**2KJ3214 - ■ JQ23 - ■ ■ L1**	

Article No. supplement		
Shaft design	**1 or 9**	➞ page 10/43
Frequency and voltage	**2 or 9**	➞ page 11/2
Gearbox mounting type	**A, B, F or H**	➞ page 10/37

© Siemens AG 2017

Selection and ordering data (continued)

P_{rated}	n_2	T_2	i	F_{R2}	f_B	m	Article No.	Order code
kW	rpm	Nm	-	N	-	kg	(Article No. supplement ➞ below)	No. of poles
9.2	**D.169-LE160MPA4P**							
	5.4	16 200	271.40	69 300	0.86	504	**2KJ3213 - ■ JQ23 - ■ ■ T1**	
	6.0	14 500	243.68	69 900	0.96	504	**2KJ3213 - ■ JQ23 - ■ ■ S1**	
	6.7	13 100	220.58	70 500	1.1	504	**2KJ3213 - ■ JQ23 - ■ ■ R1**	
	7.6	11 500	193.75	71 000	1.2	504	**2KJ3213 - ■ JQ23 - ■ ■ Q1**	
	8.4	10 400	175.57	71 500	1.3	504	**2KJ3213 - ■ JQ23 - ■ ■ P1**	
	9.4	9 340	156.36	71 900	1.5	504	**2KJ3213 - ■ JQ23 - ■ ■ N1**	
	10	8 390	140.41	72 200	1.7	504	**2KJ3213 - ■ JQ23 - ■ ■ M1**	
	12	7 480	125.28	72 600	1.9	504	**2KJ3213 - ■ JQ23 - ■ ■ L1**	
	13	6 670	111.69	72 900	2.1	504	**2KJ3213 - ■ JQ23 - ■ ■ K1**	
	D.149-LE160MPA4P							
	9.4	9 330	156.11	50 500	0.86	325	**2KJ3212 - ■ JQ23 - ■ ■ P1**	
	11	8 260	138.26	51 000	0.97	325	**2KJ3212 - ■ JQ23 - ■ ■ N1**	
	12	7 350	123.04	51 500	1.1	325	**2KJ3212 - ■ JQ23 - ■ ■ M1**	
	13	6 590	110.26	51 800	1.2	325	**2KJ3212 - ■ JQ23 - ■ ■ L1**	
	15	5 840	97.75	52 200	1.4	325	**2KJ3212 - ■ JQ23 - ■ ■ K1**	
	17	5 150	86.29	52 500	1.6	325	**2KJ3212 - ■ JQ23 - ■ ■ J1**	
	19	4 530	75.87	52 800	1.8	325	**2KJ3212 - ■ JQ23 - ■ ■ H1**	
	21	4 100	68.71	53 000	1.9	325	**2KJ3212 - ■ JQ23 - ■ ■ G1**	
	Z.149-LE160MPA4P							
	26	3 380	56.64	53 400	2.4	319	**2KJ3112 - ■ JQ23 - ■ ■ W1**	
	28	3 150	52.84	53 500	2.4	319	**2KJ3112 - ■ JQ23 - ■ ■ V1**	
	D.129-LE160MPA4P							
	14	6 090	102.05	26 400	0.82	241	**2KJ3211 - ■ JQ23 - ■ ■ E1**	
	16	5 370	89.91	26 800	0.93	241	**2KJ3211 - ■ JQ23 - ■ ■ D1**	
	19	4 700	78.78	27 200	1.1	241	**2KJ3211 - ■ JQ23 - ■ ■ C1**	
	Z.129-LE160MPA4P							
	24	3 730	62.48	27 800	1.3	237	**2KJ3111 - ■ JQ23 - ■ ■ X1**	
	27	3 190	53.47	28 100	1.6	237	**2KJ3111 - ■ JQ23 - ■ ■ W1**	
	29	3 000	50.33	28 200	1.7	237	**2KJ3111 - ■ JQ23 - ■ ■ V1**	
	31	2 820	47.18	28 300	1.8	237	**2KJ3111 - ■ JQ23 - ■ ■ U1**	
	35	2 500	41.82	28 500	2.0	237	**2KJ3111 - ■ JQ23 - ■ ■ T1**	
	40	2 220	37.15	28 600	2.3	237	**2KJ3111 - ■ JQ23 - ■ ■ S1**	
	44	2 000	33.52	28 800	2.5	237	**2KJ3111 - ■ JQ23 - ■ ■ R1**	
	49	1 770	29.70	28 900	2.8	237	**2KJ3111 - ■ JQ23 - ■ ■ Q1**	
	D.109-LE160MPA4P							
	23	3 840	64.34	20 000	0.81	178	**2KJ3210 - ■ JQ23 - ■ ■ C1**	
	Z.109-LE160MPA4P							
	29	3 050	51.17	20 200	1.0	175	**2KJ3110 - ■ JQ23 - ■ ■ X1**	
	34	2 600	43.64	20 200	1.2	175	**2KJ3110 - ■ JQ23 - ■ ■ W1**	
	36	2 450	41.07	20 200	1.3	175	**2KJ3110 - ■ JQ23 - ■ ■ V1**	
	39	2 270	38.12	20 200	1.4	175	**2KJ3110 - ■ JQ23 - ■ ■ U1**	
	44	2 010	33.70	20 200	1.5	175	**2KJ3110 - ■ JQ23 - ■ ■ T1**	
	49	1 790	30.08	20 200	1.7	175	**2KJ3110 - ■ JQ23 - ■ ■ S1**	
	54	1 610	27.07	20 200	1.9	175	**2KJ3110 - ■ JQ23 - ■ ■ R1**	
	63	1 400	23.49	20 200	2.1	175	**2KJ3110 - ■ JQ23 - ■ ■ Q1**	
	70	1 260	21.13	20 200	2.2	175	**2KJ3110 - ■ JQ23 - ■ ■ P1**	
	80	1 100	18.47	20 200	2.5	175	**2KJ3110 - ■ JQ23 - ■ ■ N1**	
	89	985	16.48	20 200	2.7	175	**2KJ3110 - ■ JQ23 - ■ ■ M1**	
	101	865	14.52	19 800	3.0	175	**2KJ3110 - ■ JQ23 - ■ ■ L1**	

Article No. supplement		
Shaft design	**1 or 9**	➞ page 10/43
Frequency and voltage	**2 or 9**	➞ page 11/2
Gearbox mounting type	**A, B, F or H**	➞ page 10/37

© Siemens AG 2017

3

Selection and ordering data (continued)

P_{rated}	n_2	T_2	i	F_{R2}	f_B	m	Article No.	Order code
kW	rpm	Nm	-	N	-	kg	(Article No. supplement ➞ below)	No. of poles
9.2	**Z.109-LE160MPA4P**							
	116	760	12.72	19 200	3.3	175	**2KJ3110 - ■ JQ23 - ■ ■ K1**	
	133	660	11.09	18 600	3.7	175	**2KJ3110 - ■ JQ23 - ■ ■ J1**	
	145	605	10.12	18 200	4.0	175	**2KJ3110 - ■ JQ23 - ■ ■ H1**	
	Z.89-LE160MPA4P							
	44	1 990	33.38	18 500	0.84	137	**2KJ3108 - ■ JQ23 - ■ ■ T1**	
	47	1 870	31.41	18 500	0.89	137	**2KJ3108 - ■ JQ23 - ■ ■ S1**	
	51	1 730	29.01	18 500	0.97	137	**2KJ3108 - ■ JQ23 - ■ ■ R1**	
	57	1 540	25.81	18 500	1.1	137	**2KJ3108 - ■ JQ23 - ■ ■ Q1**	
	64	1 370	22.92	18 500	1.2	137	**2KJ3108 - ■ JQ23 - ■ ■ P1**	
	72	1 220	20.52	18 400	1.4	137	**2KJ3108 - ■ JQ23 - ■ ■ N1**	
	84	1 040	17.54	17 800	1.6	137	**2KJ3108 - ■ JQ23 - ■ ■ M1**	
	94	935	15.66	17 300	1.8	137	**2KJ3108 - ■ JQ23 - ■ ■ L1**	
	106	825	13.84	16 800	2.0	137	**2KJ3108 - ■ JQ23 - ■ ■ K1**	
	121	725	12.15	16 300	2.2	137	**2KJ3108 - ■ JQ23 - ■ ■ J1**	
	139	630	10.58	15 800	2.5	137	**2KJ3108 - ■ JQ23 - ■ ■ H1**	
	163	540	9.04	15 100	2.9	137	**2KJ3108 - ■ JQ23 - ■ ■ G1**	
	190	460	7.74	14 500	3.3	137	**2KJ3108 - ■ JQ23 - ■ ■ F1**	
	213	410	6.89	14 100	2.5	137	**2KJ3108 - ■ JQ23 - ■ ■ E1**	
	243	360	6.05	13 600	2.9	137	**2KJ3108 - ■ JQ23 - ■ ■ D1**	
	279	310	5.26	13 100	3.4	137	**2KJ3108 - ■ JQ23 - ■ ■ C1**	
	327	265	4.50	12 500	3.9	137	**2KJ3108 - ■ JQ23 - ■ ■ B1**	
	382	230	3.85	11 900	4.6	137	**2KJ3108 - ■ JQ23 - ■ ■ A1**	
	Z.79-LE160MPA4P							
	85	1 030	17.31	10 800	0.81	114	**2KJ3107 - ■ JQ23 - ■ ■ M1**	
	97	900	15.13	10 600	0.93	114	**2KJ3107 - ■ JQ23 - ■ ■ L1**	
	113	775	12.99	10 300	1.1	114	**2KJ3107 - ■ JQ23 - ■ ■ K1**	
	128	685	11.48	10 000	1.2	114	**2KJ3107 - ■ JQ23 - ■ ■ J1**	
	151	580	9.76	9 760	1.4	114	**2KJ3107 - ■ JQ23 - ■ ■ H1**	
	176	500	8.37	6 440	1.6	114	**2KJ3107 - ■ JQ23 - ■ ■ G1**	
	179	490	8.19	4 820	1.5	114	**2KJ3107 - ■ JQ23 - ■ ■ F1**	
	205	425	7.16	5 410	1.7	114	**2KJ3107 - ■ JQ23 - ■ ■ E1**	
	239	365	6.15	5 860	1.9	114	**2KJ3107 - ■ JQ23 - ■ ■ D1**	
	271	325	5.43	6 090	2.1	114	**2KJ3107 - ■ JQ23 - ■ ■ C1**	
	318	275	4.62	6 380	2.8	114	**2KJ3107 - ■ JQ23 - ■ ■ B1**	
	371	235	3.96	6 540	3.3	114	**2KJ3107 - ■ JQ23 - ■ ■ A1**	
	E.149-LE160MPA4P							
	151	580	9.76	16 000	2.1	198	**2KJ3007 - ■ JQ23 - ■ ■ S1**	
	161	540	9.11	16 000	2.3	198	**2KJ3007 - ■ JQ23 - ■ ■ R1**	
	181	480	8.10	16 000	2.7	198	**2KJ3007 - ■ JQ23 - ■ ■ Q1**	
	202	435	7.27	16 000	3.1	198	**2KJ3007 - ■ JQ23 - ■ ■ P1**	
	223	390	6.58	16 000	3.4	198	**2KJ3007 - ■ JQ23 - ■ ■ N1**	
	254	345	5.78	16 000	4.3	198	**2KJ3007 - ■ JQ23 - ■ ■ M1**	
	281	310	5.24	16 000	4.8	198	**2KJ3007 - ■ JQ23 - ■ ■ L1**	
	E.129-LE160MPA4P							
	150	585	9.79	13 500	1.1	161	**2KJ3006 - ■ JQ23 - ■ ■ T1**	
	175	500	8.38	13 500	1.3	161	**2KJ3006 - ■ JQ23 - ■ ■ S1**	
	187	470	7.88	13 500	1.4	161	**2KJ3006 - ■ JQ23 - ■ ■ R1**	
	199	440	7.39	13 500	1.8	161	**2KJ3006 - ■ JQ23 - ■ ■ Q1**	

Article No. supplement		
Shaft design	**1 or 9**	➞ page 10/43
Frequency and voltage	**2 or 9**	➞ page 11/2
Gearbox mounting type	**A, B, F or H**	➞ page 10/37

© Siemens AG 2017

Selection and ordering data (continued)

P_{rated}	n_2	T_2	i	F_{R2}	f_B	m	Article No.	Order code
kW	rpm	Nm	-	N	-	kg	(Article No. supplement ➞ below)	No. of poles
9.2	**E.129-LE160MPA4P**							
	224	390	6.55	13 500	2.0	161	**2KJ3006 - ■ JQ23 - ■ ■ P1**	
	253	345	5.82	13 500	2.3	161	**2KJ3006 - ■ JQ23 - ■ ■ N1**	
	280	310	5.25	13 500	2.5	161	**2KJ3006 - ■ JQ23 - ■ ■ M1**	
	316	275	4.65	13 500	2.9	161	**2KJ3006 - ■ JQ23 - ■ ■ L1**	
	357	245	4.12	13 500	3.2	161	**2KJ3006 - ■ JQ23 - ■ ■ K1**	
	401	215	3.67	13 400	3.6	161	**2KJ3006 - ■ JQ23 - ■ ■ J1**	
	447	197	3.29	13 000	4.0	161	**2KJ3006 - ■ JQ23 - ■ ■ H1**	
	505	174	2.91	12 600	4.4	161	**2KJ3006 - ■ JQ23 - ■ ■ G1**	
	572	154	2.57	12 200	5.0	161	**2KJ3006 - ■ JQ23 - ■ ■ F1**	
	650	135	2.26	11 800	5.6	161	**2KJ3006 - ■ JQ23 - ■ ■ E1**	
	717	123	2.05	11 500	6.2	161	**2KJ3006 - ■ JQ23 - ■ ■ D1**	
	E.109-LE160MPA4P							
	204	430	7.19	10 500	1.3	137	**2KJ3005 - ■ JQ23 - ■ ■ Q1**	
	217	400	6.76	10 500	1.4	137	**2KJ3005 - ■ JQ23 - ■ ■ P1**	
	234	375	6.28	10 500	1.5	137	**2KJ3005 - ■ JQ23 - ■ ■ N1**	
	265	330	5.55	10 500	1.7	137	**2KJ3005 - ■ JQ23 - ■ ■ M1**	
	297	295	4.95	10 500	1.9	137	**2KJ3005 - ■ JQ23 - ■ ■ L1**	
	330	265	4.46	10 500	2.1	137	**2KJ3005 - ■ JQ23 - ■ ■ K1**	
	380	230	3.87	10 500	2.4	137	**2KJ3005 - ■ JQ23 - ■ ■ J1**	
	422	205	3.48	10 500	2.6	137	**2KJ3005 - ■ JQ23 - ■ ■ H1**	
	484	182	3.04	10 500	3.0	137	**2KJ3005 - ■ JQ23 - ■ ■ G1**	
	542	162	2.71	10 500	3.4	137	**2KJ3005 - ■ JQ23 - ■ ■ F1**	
	615	143	2.39	10 500	3.8	137	**2KJ3005 - ■ JQ23 - ■ ■ E1**	
	700	126	2.10	10 300	4.3	137	**2KJ3005 - ■ JQ23 - ■ ■ D1**	
	803	109	1.83	10 000	4.8	137	**2KJ3005 - ■ JQ23 - ■ ■ C1**	
	880	100	1.67	9 780	5.3	137	**2KJ3005 - ■ JQ23 - ■ ■ B1**	
	1 028	86	1.43	9 390	5.4	137	**2KJ3005 - ■ JQ23 - ■ ■ A1**	
	E.89-LE160MPA4P							
	262	335	5.62	8 000	0.95	115	**2KJ3004 - ■ JQ23 - ■ ■ N1**	
	301	290	4.89	8 000	1.2	115	**2KJ3004 - ■ JQ23 - ■ ■ L1**	
	338	260	4.35	8 000	1.4	115	**2KJ3004 - ■ JQ23 - ■ ■ K1**	
	381	230	3.86	8 000	1.6	115	**2KJ3004 - ■ JQ23 - ■ ■ J1**	
	425	205	3.46	8 000	1.8	115	**2KJ3004 - ■ JQ23 - ■ ■ H1**	
	497	177	2.96	8 000	2.0	115	**2KJ3004 - ■ JQ23 - ■ ■ G1**	
	557	158	2.64	8 000	2.3	115	**2KJ3004 - ■ JQ23 - ■ ■ F1**	
	631	139	2.33	7 810	2.6	115	**2KJ3004 - ■ JQ23 - ■ ■ E1**	
	717	123	2.05	7 570	2.9	115	**2KJ3004 - ■ JQ23 - ■ ■ D1**	
	826	106	1.78	7 320	3.4	115	**2KJ3004 - ■ JQ23 - ■ ■ C1**	
	967	91	1.52	7 040	4.0	115	**2KJ3004 - ■ JQ23 - ■ ■ B1**	
	1 131	78	1.30	6 760	4.6	115	**2KJ3004 - ■ JQ23 - ■ ■ A1**	
	E.69-LE160MPA4P							
	389	225	3.78	1 000	0.89	90	**2KJ3003 - ■ JQ23 - ■ ■ H1**	
	445	197	3.30	6 100	1.0	90	**2KJ3003 - ■ JQ23 - ■ ■ G1**	
	498	176	2.95	6 100	1.1	90	**2KJ3003 - ■ JQ23 - ■ ■ F1**	
	662	133	2.22	6 100	1.5	90	**2KJ3003 - ■ JQ23 - ■ ■ D1**	
	750	117	1.96	6 100	1.7	90	**2KJ3003 - ■ JQ23 - ■ ■ C1**	
	880	100	1.67	6 030	2.0	90	**2KJ3003 - ■ JQ23 - ■ ■ B1**	
	1 028	86	1.43	5 890	2.3	90	**2KJ3003 - ■ JQ23 - ■ ■ A1**	

Article No. supplement		
Shaft design	**1 or 9**	➞ page 10/43
Frequency and voltage	**2 or 9**	➞ page 11/2
Gearbox mounting type	**A, B, F or H**	➞ page 10/37

© Siemens AG 2017

3

Selection and ordering data (continued)

P_{rated}	n_2	T_2	i	F_{R2}	f_B	m	Article No.	Order code
kW	rpm	Nm	-	N	-	kg	(Article No. supplement ➞ below)	No. of poles
11	**D.189-LE160MPB4P**							
	4.7	22 300	313.63	107 000	0.85	709	**2KJ3214 - ■ JR23 - ■ ■ T1**	
	5.3	19 900	280.59	107 000	0.95	709	**2KJ3214 - ■ JR23 - ■ ■ S1**	
	5.8	18 000	253.06	107 000	1.1	709	**2KJ3214 - ■ JR23 - ■ ■ R1**	
	6.6	15 900	223.66	107 000	1.2	709	**2KJ3214 - ■ JR23 - ■ ■ Q1**	
	7.2	14 500	204.44	107 000	1.3	709	**2KJ3214 - ■ JR23 - ■ ■ P1**	
	8.0	13 000	183.92	107 000	1.5	709	**2KJ3214 - ■ JR23 - ■ ■ N1**	
	9.0	11 700	164.36	107 000	1.6	709	**2KJ3214 - ■ JR23 - ■ ■ M1**	
	9.9	10 500	148.63	107 000	1.8	709	**2KJ3214 - ■ JR23 - ■ ■ L1**	
	11	9 340	131.17	107 000	2.0	709	**2KJ3214 - ■ JR23 - ■ ■ K1**	
	D.169-LE160MPB4P							
	6.1	17 300	243.68	68 900	0.81	496	**2KJ3213 - ■ JR23 - ■ ■ S1**	
	6.7	15 700	220.58	69 500	0.89	496	**2KJ3213 - ■ JR23 - ■ ■ R1**	
	7.6	13 700	193.75	70 200	1.0	496	**2KJ3213 - ■ JR23 - ■ ■ Q1**	
	8.4	12 500	175.57	70 700	1.1	496	**2KJ3213 - ■ JR23 - ■ ■ P1**	
	9.4	11 100	156.36	71 200	1.3	496	**2KJ3213 - ■ JR23 - ■ ■ N1**	
	11	10 000	140.41	71 600	1.4	496	**2KJ3213 - ■ JR23 - ■ ■ M1**	
	12	8 920	125.28	72 000	1.6	496	**2KJ3213 - ■ JR23 - ■ ■ L1**	
	13	7 950	111.69	72 400	1.8	496	**2KJ3213 - ■ JR23 - ■ ■ K1**	
	15	7 050	99.06	72 700	2.0	496	**2KJ3213 - ■ JR23 - ■ ■ J1**	
	16	6 470	90.94	72 900	2.2	496	**2KJ3213 - ■ JR23 - ■ ■ H1**	
	D.149-LE160MPB4P							
	11	9 840	138.26	50 300	0.81	317	**2KJ3212 - ■ JR23 - ■ ■ N1**	
	12	8 760	123.04	50 800	0.91	317	**2KJ3212 - ■ JR23 - ■ ■ M1**	
	13	7 850	110.26	51 200	1.0	317	**2KJ3212 - ■ JR23 - ■ ■ L1**	
	15	6 960	97.75	51 600	1.1	317	**2KJ3212 - ■ JR23 - ■ ■ K1**	
	17	6 140	86.29	52 100	1.3	317	**2KJ3212 - ■ JR23 - ■ ■ J1**	
	19	5 400	75.87	52 400	1.5	317	**2KJ3212 - ■ JR23 - ■ ■ H1**	
	21	4 890	68.71	52 700	1.6	317	**2KJ3212 - ■ JR23 - ■ ■ G1**	
	Z.149-LE160MPB4P							
	26	4 030	56.64	53 100	2.0	311	**2KJ3112 - ■ JR23 - ■ ■ W1**	
	28	3 760	52.84	53 200	2.0	311	**2KJ3112 - ■ JR23 - ■ ■ V1**	
	31	3 340	46.98	53 200	2.3	311	**2KJ3112 - ■ JR23 - ■ ■ U1**	
	35	3 000	42.18	51 800	2.5	311	**2KJ3112 - ■ JR23 - ■ ■ T1**	
	D.129-LE160MPB4P							
	19	5 610	78.78	26 700	0.89	233	**2KJ3211 - ■ JR23 - ■ ■ C1**	
	Z.129-LE160MPB4P							
	24	4 450	62.48	27 300	1.1	229	**2KJ3111 - ■ JR23 - ■ ■ X1**	
	28	3 800	53.47	27 700	1.3	229	**2KJ3111 - ■ JR23 - ■ ■ W1**	
	29	3 580	50.33	27 900	1.4	229	**2KJ3111 - ■ JR23 - ■ ■ V1**	
	31	3 360	47.18	28 000	1.5	229	**2KJ3111 - ■ JR23 - ■ ■ U1**	
	35	2 970	41.82	28 200	1.7	229	**2KJ3111 - ■ JR23 - ■ ■ T1**	
	40	2 640	37.15	28 400	1.9	229	**2KJ3111 - ■ JR23 - ■ ■ S1**	
	44	2 380	33.52	28 500	2.1	229	**2KJ3111 - ■ JR23 - ■ ■ R1**	
	50	2 110	29.70	28 600	2.4	229	**2KJ3111 - ■ JR23 - ■ ■ Q1**	
	56	1 870	26.30	27 800	2.7	229	**2KJ3111 - ■ JR23 - ■ ■ P1**	
	63	1 660	23.41	27 100	3.0	229	**2KJ3111 - ■ JR23 - ■ ■ N1**	
	Z.109-LE160MPB4P							
	29	3 640	51.17	20 200	0.85	167	**2KJ3110 - ■ JR23 - ■ ■ X1**	
	34	3 100	43.64	20 200	1.0	167	**2KJ3110 - ■ JR23 - ■ ■ W1**	

Article No. supplement		
Shaft design	**1 or 9**	➞ page 10/43
Frequency and voltage	**2 or 9**	➞ page 11/2
Gearbox mounting type	**A, B, F or H**	➞ page 10/37

© Siemens AG 2017

Selection and ordering data (continued)

P_{rated}	n_2	T_2	i	F_{R2}	f_B	m	Article No.	Order code
kW	rpm	Nm	-	N	-	kg	(Article No. supplement ➞ below)	No. of poles
11	**Z.109-LE160MPB4P**							
	36	2 920	41.07	20 200	1.1	167	**2KJ3110 - ■ JR23 - ■ ■ V1**	
	39	2 710	38.12	20 200	1.1	167	**2KJ3110 - ■ JR23 - ■ ■ U1**	
	44	2 400	33.70	20 200	1.3	167	**2KJ3110 - ■ JR23 - ■ ■ T1**	
	49	2 140	30.08	20 200	1.4	167	**2KJ3110 - ■ JR23 - ■ ■ S1**	
	54	1 920	27.07	20 200	1.6	167	**2KJ3110 - ■ JR23 - ■ ■ R1**	
	63	1 670	23.49	20 200	1.7	167	**2KJ3110 - ■ JR23 - ■ ■ Q1**	
	70	1 500	21.13	20 200	1.9	167	**2KJ3110 - ■ JR23 - ■ ■ P1**	
	80	1 310	18.47	20 200	2.1	167	**2KJ3110 - ■ JR23 - ■ ■ N1**	
	90	1 170	16.48	19 900	2.2	167	**2KJ3110 - ■ JR23 - ■ ■ M1**	
	102	1 030	14.52	19 400	2.5	167	**2KJ3110 - ■ JR23 - ■ ■ L1**	
	116	905	12.72	18 800	2.8	167	**2KJ3110 - ■ JR23 - ■ ■ K1**	
	133	790	11.09	18 200	3.1	167	**2KJ3110 - ■ JR23 - ■ ■ J1**	
	146	720	10.12	17 900	3.4	167	**2KJ3110 - ■ JR23 - ■ ■ H1**	
	169	620	8.71	17 200	3.8	167	**2KJ3110 - ■ JR23 - ■ ■ G1**	
	175	595	8.41	17 000	3.8	167	**2KJ3110 - ■ JR23 - ■ ■ F1**	
	199	525	7.41	16 500	4.3	167	**2KJ3110 - ■ JR23 - ■ ■ E1**	
	Z.89-LE160MPB4P							
	51	2 060	29.01	15 700	0.81	129	**2KJ3108 - ■ JR23 - ■ ■ R1**	
	57	1 830	25.81	17 000	0.91	129	**2KJ3108 - ■ JR23 - ■ ■ Q1**	
	64	1 630	22.92	17 900	1.0	129	**2KJ3108 - ■ JR23 - ■ ■ P1**	
	72	1 460	20.52	17 700	1.1	129	**2KJ3108 - ■ JR23 - ■ ■ N1**	
	84	1 240	17.54	17 200	1.3	129	**2KJ3108 - ■ JR23 - ■ ■ M1**	
	94	1 110	15.66	16 800	1.5	129	**2KJ3108 - ■ JR23 - ■ ■ L1**	
	107	985	13.84	16 400	1.7	129	**2KJ3108 - ■ JR23 - ■ ■ K1**	
	121	865	12.15	15 900	1.9	129	**2KJ3108 - ■ JR23 - ■ ■ J1**	
	139	750	10.58	15 400	2.1	129	**2KJ3108 - ■ JR23 - ■ ■ H1**	
	163	640	9.04	14 800	2.4	129	**2KJ3108 - ■ JR23 - ■ ■ G1**	
	191	550	7.74	14 200	2.8	129	**2KJ3108 - ■ JR23 - ■ ■ F1**	
	214	490	6.89	13 900	2.1	129	**2KJ3108 - ■ JR23 - ■ ■ E1**	
	244	430	6.05	13 400	2.5	129	**2KJ3108 - ■ JR23 - ■ ■ D1**	
	280	375	5.26	12 900	2.8	129	**2KJ3108 - ■ JR23 - ■ ■ C1**	
	328	320	4.50	12 300	3.3	129	**2KJ3108 - ■ JR23 - ■ ■ B1**	
	383	270	3.85	11 800	3.9	129	**2KJ3108 - ■ JR23 - ■ ■ A1**	
	Z.79-LE160MPB4P							
	114	925	12.99	9 850	0.91	106	**2KJ3107 - ■ JR23 - ■ ■ K1**	
	128	815	11.48	9 680	1.0	106	**2KJ3107 - ■ JR23 - ■ ■ J1**	
	151	695	9.76	9 400	1.2	106	**2KJ3107 - ■ JR23 - ■ ■ H1**	
	176	595	8.37	4 990	1.3	106	**2KJ3107 - ■ JR23 - ■ ■ G1**	
	180	580	8.19	8 880	1.2	106	**2KJ3107 - ■ JR23 - ■ ■ F1**	
	206	510	7.16	8 650	1.4	106	**2KJ3107 - ■ JR23 - ■ ■ E1**	
	240	435	6.15	4 550	1.6	106	**2KJ3107 - ■ JR23 - ■ ■ D1**	
	272	385	5.43	4 970	1.8	106	**2KJ3107 - ■ JR23 - ■ ■ C1**	
	319	325	4.62	5 440	2.4	106	**2KJ3107 - ■ JR23 - ■ ■ B1**	
	372	280	3.96	5 700	2.7	106	**2KJ3107 - ■ JR23 - ■ ■ A1**	
	E.149-LE160MPB4P							
	151	695	9.76	16 000	1.7	190	**2KJ3007 - ■ JR23 - ■ ■ S1**	
	162	645	9.11	16 000	1.9	190	**2KJ3007 - ■ JR23 - ■ ■ R1**	
	182	575	8.10	16 000	2.3	190	**2KJ3007 - ■ JR23 - ■ ■ Q1**	

Article No. supplement		
Shaft design	**1 or 9**	➞ page 10/43
Frequency and voltage	**2 or 9**	➞ page 11/2
Gearbox mounting type	**A, B, F or H**	➞ page 10/37

© Siemens AG 2017

3

Selection and ordering data (continued)

P_{rated}	n_2	T_2	i	F_{R2}	f_B	m	Article No.	Order code
kW	rpm	Nm	-	N	-	kg	(Article No. supplement ➞ below)	No. of poles
11	**E.149-LE160MPB4P**							
	203	515	7.27	16 000	2.6	190	**2KJ3007 - ■ JR23 - ■ ■ P1**	
	224	465	6.58	16 000	2.8	190	**2KJ3007 - ■ JR23 - ■ ■ N1**	
	255	410	5.78	16 000	3.6	190	**2KJ3007 - ■ JR23 - ■ ■ M1**	
	281	370	5.24	16 000	4.0	190	**2KJ3007 - ■ JR23 - ■ ■ L1**	
	316	330	4.67	16 000	4.4	190	**2KJ3007 - ■ JR23 - ■ ■ K1**	
	352	295	4.19	15 800	5.0	190	**2KJ3007 - ■ JR23 - ■ ■ J1**	
	E.129-LE160MPB4P							
	151	695	9.79	13 500	0.95	153	**2KJ3006 - ■ JR23 - ■ ■ T1**	
	176	595	8.38	13 500	1.1	153	**2KJ3006 - ■ JR23 - ■ ■ S1**	
	187	560	7.88	13 500	1.2	153	**2KJ3006 - ■ JR23 - ■ ■ R1**	
	200	525	7.39	13 500	1.5	153	**2KJ3006 - ■ JR23 - ■ ■ Q1**	
	225	465	6.55	13 500	1.7	153	**2KJ3006 - ■ JR23 - ■ ■ P1**	
	253	415	5.82	13 500	1.9	153	**2KJ3006 - ■ JR23 - ■ ■ N1**	
	281	370	5.25	13 500	2.1	153	**2KJ3006 - ■ JR23 - ■ ■ M1**	
	317	330	4.65	13 500	2.4	153	**2KJ3006 - ■ JR23 - ■ ■ L1**	
	358	290	4.12	13 500	2.7	153	**2KJ3006 - ■ JR23 - ■ ■ K1**	
	402	260	3.67	13 100	3.0	153	**2KJ3006 - ■ JR23 - ■ ■ J1**	
	448	230	3.29	12 800	3.3	153	**2KJ3006 - ■ JR23 - ■ ■ H1**	
	507	205	2.91	12 400	3.7	153	**2KJ3006 - ■ JR23 - ■ ■ G1**	
	574	183	2.57	12 100	4.2	153	**2KJ3006 - ■ JR23 - ■ ■ F1**	
	653	161	2.26	11 700	4.7	153	**2KJ3006 - ■ JR23 - ■ ■ E1**	
	720	146	2.05	11 400	5.2	153	**2KJ3006 - ■ JR23 - ■ ■ D1**	
	829	127	1.78	11 000	6.0	153	**2KJ3006 - ■ JR23 - ■ ■ C1**	
	E.109-LE160MPB4P							
	205	510	7.19	10 500	1.1	129	**2KJ3005 - ■ JR23 - ■ ■ Q1**	
	218	480	6.76	10 500	1.2	129	**2KJ3005 - ■ JR23 - ■ ■ P1**	
	235	445	6.28	10 500	1.3	129	**2KJ3005 - ■ JR23 - ■ ■ N1**	
	266	395	5.55	10 500	1.4	129	**2KJ3005 - ■ JR23 - ■ ■ M1**	
	298	350	4.95	10 500	1.6	129	**2KJ3005 - ■ JR23 - ■ ■ L1**	
	331	315	4.46	10 500	1.8	129	**2KJ3005 - ■ JR23 - ■ ■ K1**	
	381	275	3.87	10 500	2.0	129	**2KJ3005 - ■ JR23 - ■ ■ J1**	
	424	245	3.48	10 500	2.2	129	**2KJ3005 - ■ JR23 - ■ ■ H1**	
	485	215	3.04	10 500	2.5	129	**2KJ3005 - ■ JR23 - ■ ■ G1**	
	544	193	2.71	10 500	2.8	129	**2KJ3005 - ■ JR23 - ■ ■ F1**	
	617	170	2.39	10 500	3.2	129	**2KJ3005 - ■ JR23 - ■ ■ E1**	
	702	150	2.10	10 200	3.6	129	**2KJ3005 - ■ JR23 - ■ ■ D1**	
	806	130	1.83	9 890	4.1	129	**2KJ3005 - ■ JR23 - ■ ■ C1**	
	883	119	1.67	9 650	4.5	129	**2KJ3005 - ■ JR23 - ■ ■ B1**	
	1 031	102	1.43	9 280	4.6	129	**2KJ3005 - ■ JR23 - ■ ■ A1**	
	E.89-LE160MPB4P							
	262	400	5.62	8 000	0.80	107	**2KJ3004 - ■ JR23 - ■ ■ N1**	
	302	345	4.89	8 000	1.0	107	**2KJ3004 - ■ JR23 - ■ ■ L1**	
	339	310	4.35	8 000	1.2	107	**2KJ3004 - ■ JR23 - ■ ■ K1**	
	382	275	3.86	8 000	1.3	107	**2KJ3004 - ■ JR23 - ■ ■ J1**	
	426	245	3.46	8 000	1.5	107	**2KJ3004 - ■ JR23 - ■ ■ H1**	
	498	210	2.96	8 000	1.7	107	**2KJ3004 - ■ JR23 - ■ ■ G1**	
	559	188	2.64	7 820	1.9	107	**2KJ3004 - ■ JR23 - ■ ■ F1**	
	633	166	2.33	7 620	2.2	107	**2KJ3004 - ■ JR23 - ■ ■ E1**	

Article No. supplement		
Shaft design	**1 or 9**	➞ page 10/43
Frequency and voltage	**2 or 9**	➞ page 11/2
Gearbox mounting type	**A, B, F or H**	➞ page 10/37

© Siemens AG 2017

Selection and ordering data (continued)

P_{rated} kW	n_2 rpm	T_2 Nm	i -	F_{R2} N	f_B -	m kg	Article No. (Article No. supplement ➞ below)	Order code No. of poles
11	**E.89-LE160MPB4P**							
	720	146	2.05	7 400	2.5	107	**2KJ3004 - ■ JR23 - ■ ■ D1**	
	829	127	1.78	7 160	2.9	107	**2KJ3004 - ■ JR23 - ■ ■ C1**	
	970	108	1.52	6 900	3.3	107	**2KJ3004 - ■ JR23 - ■ ■ B1**	
	1 135	93	1.30	6 630	3.9	107	**2KJ3004 - ■ JR23 - ■ ■ A1**	
	E.69-LE160MPB4P							
	447	235	3.30	5 190	0.85	82	**2KJ3003 - ■ JR23 - ■ ■ G1**	
	500	210	2.95	5 390	0.95	82	**2KJ3003 - ■ JR23 - ■ ■ F1**	
	883	119	1.67	5 450	1.6	82	**2KJ3003 - ■ JR23 - ■ ■ B1**	
	1 031	102	1.43	5 370	1.9	82	**2KJ3003 - ■ JR23 - ■ ■ A1**	
15	**D.189-LE160ZLL4P**							
	6.6	21 700	223.66	107 000	0.87	734	**2KJ3214 - ■ JU23 - ■ ■ Q1**	
	7.2	19 800	204.44	107 000	0.96	734	**2KJ3214 - ■ JU23 - ■ ■ P1**	
	8.0	17 800	183.92	107 000	1.1	734	**2KJ3214 - ■ JU23 - ■ ■ N1**	
	9.0	15 900	164.36	107 000	1.2	734	**2KJ3214 - ■ JU23 - ■ ■ M1**	
	9.9	14 400	148.63	107 000	1.3	734	**2KJ3214 - ■ JU23 - ■ ■ L1**	
	11	12 700	131.17	107 000	1.5	734	**2KJ3214 - ■ JU23 - ■ ■ K1**	
	13	11 300	116.88	107 000	1.7	734	**2KJ3214 - ■ JU23 - ■ ■ J1**	
	14	10 200	105.89	107 000	1.8	734	**2KJ3214 - ■ JU23 - ■ ■ H1**	
	15	9 250	95.24	107 000	2.1	734	**2KJ3214 - ■ JU23 - ■ ■ G1**	
	D.169-LE160ZLL4P							
	8.4	17 000	175.57	69 000	0.82	521	**2KJ3213 - ■ JU23 - ■ ■ P1**	
	9.4	15 100	156.36	69 700	0.92	521	**2KJ3213 - ■ JU23 - ■ ■ N1**	
	11	13 600	140.41	70 300	1.0	521	**2KJ3213 - ■ JU23 - ■ ■ M1**	
	12	12 100	125.28	70 800	1.2	521	**2KJ3213 - ■ JU23 - ■ ■ L1**	
	13	10 800	111.69	71 300	1.3	521	**2KJ3213 - ■ JU23 - ■ ■ K1**	
	15	9 620	99.06	71 800	1.5	521	**2KJ3213 - ■ JU23 - ■ ■ J1**	
	16	8 830	90.94	72 100	1.6	521	**2KJ3213 - ■ JU23 - ■ ■ H1**	
	18	7 780	80.12	72 400	1.8	521	**2KJ3213 - ■ JU23 - ■ ■ G1**	
	22	6 380	65.72	72 900	2.2	521	**2KJ3213 - ■ JU23 - ■ ■ F1**	
	D.149-LE160ZLL4P							
	15	9 490	97.75	50 400	0.84	342	**2KJ3212 - ■ JU23 - ■ ■ K1**	
	17	8 380	86.29	51 000	0.95	342	**2KJ3212 - ■ JU23 - ■ ■ J1**	
	19	7 360	75.87	51 500	1.1	342	**2KJ3212 - ■ JU23 - ■ ■ H1**	
	21	6 670	68.71	51 800	1.2	342	**2KJ3212 - ■ JU23 - ■ ■ G1**	
	Z.149-LE160ZLL4P							
	26	5 500	56.64	52 400	1.5	336	**2KJ3112 - ■ JU23 - ■ ■ W1**	
	28	5 130	52.84	52 500	1.5	336	**2KJ3112 - ■ JU23 - ■ ■ V1**	
	31	4 560	46.98	51 500	1.7	336	**2KJ3112 - ■ JU23 - ■ ■ U1**	
	35	4 090	42.18	50 300	1.9	336	**2KJ3112 - ■ JU23 - ■ ■ T1**	
	39	3 700	38.18	49 200	2.0	336	**2KJ3112 - ■ JU23 - ■ ■ S1**	
	44	3 250	33.54	47 700	2.5	336	**2KJ3112 - ■ JU23 - ■ ■ R1**	
	49	2 950	30.39	46 600	2.7	336	**2KJ3112 - ■ JU23 - ■ ■ Q1**	
	Z.129-LE160ZLL4P							
	24	6 060	62.48	26 400	0.82	254	**2KJ3111 - ■ JU23 - ■ ■ X1**	
	28	5 190	53.47	26 900	0.96	254	**2KJ3111 - ■ JU23 - ■ ■ W1**	
	29	4 880	50.33	27 100	1.0	254	**2KJ3111 - ■ JU23 - ■ ■ V1**	
	31	4 580	47.18	27 300	1.1	254	**2KJ3111 - ■ JU23 - ■ ■ U1**	
	35	4 060	41.82	27 600	1.2	254	**2KJ3111 - ■ JU23 - ■ ■ T1**	
	40	3 600	37.15	27 800	1.4	254	**2KJ3111 - ■ JU23 - ■ ■ S1**	

Article No. supplement		
Shaft design	**1 or 9**	➞ page 10/43
Frequency and voltage	**2 or 9**	➞ page 11/2
Gearbox mounting type	**A, B, F or H**	➞ page 10/37

© Siemens AG 2017

3

Selection and ordering data (continued)

P_{rated}	n_2	T_2	i	F_{R2}	f_B	m	Article No.	Order code
kW	rpm	Nm	-	N	-	kg	(Article No. supplement ➞ below)	No. of poles
15	**Z.129-LE160ZLL4P**							
	44	3 250	33.52	27 800	1.5	254	**2KJ3111 - ■ JU23 - ■ ■ R1**	
	50	2 880	29.70	27 300	1.7	254	**2KJ3111 - ■ JU23 - ■ ■ Q1**	
	56	2 550	26.30	26 700	2.0	254	**2KJ3111 - ■ JU23 - ■ ■ P1**	
	63	2 270	23.41	26 100	2.2	254	**2KJ3111 - ■ JU23 - ■ ■ N1**	
	70	2 030	20.98	25 500	2.5	254	**2KJ3111 - ■ JU23 - ■ ■ M1**	
	79	1 800	18.60	24 900	2.8	254	**2KJ3111 - ■ JU23 - ■ ■ L1**	
	90	1 590	16.42	24 200	3.1	254	**2KJ3111 - ■ JU23 - ■ ■ K1**	
	102	1 400	14.43	23 500	3.5	254	**2KJ3111 - ■ JU23 - ■ ■ J1**	
	Z.109-LE160ZLL4P							
	39	3 700	38.12	20 100	0.84	192	**2KJ3110 - ■ JU23 - ■ ■ U1**	
	44	3 270	33.70	20 200	0.95	192	**2KJ3110 - ■ JU23 - ■ ■ T1**	
	49	2 920	30.08	20 200	1.1	192	**2KJ3110 - ■ JU23 - ■ ■ S1**	
	54	2 620	27.07	20 200	1.2	192	**2KJ3110 - ■ JU23 - ■ ■ R1**	
	63	2 280	23.49	19 900	1.3	192	**2KJ3110 - ■ JU23 - ■ ■ Q1**	
	70	2 050	21.13	19 600	1.4	192	**2KJ3110 - ■ JU23 - ■ ■ P1**	
	80	1 790	18.47	19 200	1.5	192	**2KJ3110 - ■ JU23 - ■ ■ N1**	
	90	1 600	16.48	18 900	1.6	192	**2KJ3110 - ■ JU23 - ■ ■ M1**	
	102	1 410	14.52	18 500	1.8	192	**2KJ3110 - ■ JU23 - ■ ■ L1**	
	116	1 230	12.72	18 100	2.0	192	**2KJ3110 - ■ JU23 - ■ ■ K1**	
	133	1 070	11.09	17 600	2.3	192	**2KJ3110 - ■ JU23 - ■ ■ J1**	
	146	980	10.12	17 300	2.5	192	**2KJ3110 - ■ JU23 - ■ ■ H1**	
	169	845	8.71	16 700	2.8	192	**2KJ3110 - ■ JU23 - ■ ■ G1**	
	175	815	8.41	16 400	2.8	192	**2KJ3110 - ■ JU23 - ■ ■ F1**	
	199	720	7.41	16 000	3.2	192	**2KJ3110 - ■ JU23 - ■ ■ E1**	
	227	630	6.50	15 500	3.6	192	**2KJ3110 - ■ JU23 - ■ ■ D1**	
	261	550	5.66	15 000	4.2	192	**2KJ3110 - ■ JU23 - ■ ■ C1**	
	285	500	5.17	14 700	4.5	192	**2KJ3110 - ■ JU23 - ■ ■ B1**	
	331	430	4.45	14 200	5.0	192	**2KJ3110 - ■ JU23 - ■ ■ A1**	
	Z.89-LE160ZLL4P							
	72	1 990	20.52	12 100	0.84	154	**2KJ3108 - ■ JU23 - ■ ■ N1**	
	84	1 700	17.54	13 800	0.99	154	**2KJ3108 - ■ JU23 - ■ ■ M1**	
	94	1 520	15.66	14 700	1.1	154	**2KJ3108 - ■ JU23 - ■ ■ L1**	
	107	1 340	13.84	15 300	1.2	154	**2KJ3108 - ■ JU23 - ■ ■ K1**	
	121	1 180	12.15	15 000	1.4	154	**2KJ3108 - ■ JU23 - ■ ■ J1**	
	139	1 020	10.58	14 600	1.5	154	**2KJ3108 - ■ JU23 - ■ ■ H1**	
	163	875	9.04	14 100	1.8	154	**2KJ3108 - ■ JU23 - ■ ■ G1**	
	191	750	7.74	13 600	2.0	154	**2KJ3108 - ■ JU23 - ■ ■ F1**	
	214	665	6.89	13 400	1.6	154	**2KJ3108 - ■ JU23 - ■ ■ E1**	
	244	585	6.05	13 000	1.8	154	**2KJ3108 - ■ JU23 - ■ ■ D1**	
	280	510	5.26	12 500	2.1	154	**2KJ3108 - ■ JU23 - ■ ■ C1**	
	328	435	4.50	12 000	2.4	154	**2KJ3108 - ■ JU23 - ■ ■ B1**	
	383	370	3.85	11 500	2.8	154	**2KJ3108 - ■ JU23 - ■ ■ A1**	
	Z.79-LE160ZLL4P							
	151	945	9.76	8 640	0.86	131	**2KJ3107 - ■ JU23 - ■ ■ H1**	
	176	810	8.37	8 480	0.97	131	**2KJ3107 - ■ JU23 - ■ ■ G1**	
	180	795	8.19	8 150	0.9	131	**2KJ3107 - ■ JU23 - ■ ■ F1**	
	206	695	7.16	8 020	1.0	131	**2KJ3107 - ■ JU23 - ■ ■ E1**	
	240	595	6.15	7 840	1.2	131	**2KJ3107 - ■ JU23 - ■ ■ D1**	

Article No. supplement		
Shaft design	**1 or 9**	➞ page 10/43
Frequency and voltage	**2 or 9**	➞ page 11/2
Gearbox mounting type	**A, B, F or H**	➞ page 10/37

© Siemens AG 2017

Selection and ordering data (continued)

P_{rated}	n_2	T_2	i	F_{R2}	f_B	m	Article No.	Order code
kW	rpm	Nm	-	N	-	kg	(Article No. supplement ➞ below)	No. of poles
15	**Z.79-LE160ZLL4P**							
	272	525	5.43	7 680	1.3	131	**2KJ3107 - ■ JU23 - ■ ■ C1**	
	319	445	4.62	7 460	1.7	131	**2KJ3107 - ■ JU23 - ■ ■ B1**	
	372	385	3.96	3 760	2.0	131	**2KJ3107 - ■ JU23 - ■ ■ A1**	
	E.149-LE160ZLL4P							
	151	945	9.76	16 000	1.3	215	**2KJ3007 - ■ JU23 - ■ ■ S1**	
	162	885	9.11	16 000	1.4	215	**2KJ3007 - ■ JU23 - ■ ■ R1**	
	182	785	8.10	16 000	1.7	215	**2KJ3007 - ■ JU23 - ■ ■ Q1**	
	203	705	7.27	16 000	1.9	215	**2KJ3007 - ■ JU23 - ■ ■ P1**	
	224	635	6.58	16 000	2.1	215	**2KJ3007 - ■ JU23 - ■ ■ N1**	
	255	560	5.78	16 000	2.7	215	**2KJ3007 - ■ JU23 - ■ ■ M1**	
	281	505	5.24	16 000	2.9	215	**2KJ3007 - ■ JU23 - ■ ■ L1**	
	316	450	4.67	15 700	3.3	215	**2KJ3007 - ■ JU23 - ■ ■ K1**	
	352	405	4.19	15 300	3.6	215	**2KJ3007 - ■ JU23 - ■ ■ J1**	
	394	360	3.74	14 900	4.1	215	**2KJ3007 - ■ JU23 - ■ ■ H1**	
	443	320	3.33	14 500	4.6	215	**2KJ3007 - ■ JU23 - ■ ■ G1**	
	498	285	2.96	14 100	5.1	215	**2KJ3007 - ■ JU23 - ■ ■ F1**	
	544	260	2.71	13 800	5.5	215	**2KJ3007 - ■ JU23 - ■ ■ E1**	
	E.129-LE160ZLL4P							
	176	810	8.38	13 500	0.82	178	**2KJ3006 - ■ JU23 - ■ ■ S1**	
	187	765	7.88	13 500	0.87	178	**2KJ3006 - ■ JU23 - ■ ■ R1**	
	200	715	7.39	13 500	1.1	178	**2KJ3006 - ■ JU23 - ■ ■ Q1**	
	225	635	6.55	13 500	1.3	178	**2KJ3006 - ■ JU23 - ■ ■ P1**	
	253	565	5.82	13 500	1.4	178	**2KJ3006 - ■ JU23 - ■ ■ N1**	
	281	510	5.25	13 500	1.6	178	**2KJ3006 - ■ JU23 - ■ ■ M1**	
	317	450	4.65	13 200	1.8	178	**2KJ3006 - ■ JU23 - ■ ■ L1**	
	358	400	4.12	12 900	2.0	178	**2KJ3006 - ■ JU23 - ■ ■ K1**	
	402	355	3.67	12 600	2.2	178	**2KJ3006 - ■ JU23 - ■ ■ J1**	
	448	320	3.29	12 300	2.4	178	**2KJ3006 - ■ JU23 - ■ ■ H1**	
	507	280	2.91	12 000	2.7	178	**2KJ3006 - ■ JU23 - ■ ■ G1**	
	574	250	2.57	11 600	3.1	178	**2KJ3006 - ■ JU23 - ■ ■ F1**	
	653	215	2.26	11 300	3.5	178	**2KJ3006 - ■ JU23 - ■ ■ E1**	
	720	199	2.05	11 000	3.8	178	**2KJ3006 - ■ JU23 - ■ ■ D1**	
	829	173	1.78	10 700	4.4	178	**2KJ3006 - ■ JU23 - ■ ■ C1**	
	1 010	142	1.46	10 100	5.3	178	**2KJ3006 - ■ JU23 - ■ ■ B1**	
	1 190	120	1.24	9 750	6.2	178	**2KJ3006 - ■ JU23 - ■ ■ A1**	
	E.109-LE160ZLL4P							
	205	695	7.19	10 500	0.81	154	**2KJ3005 - ■ JU23 - ■ ■ Q1**	
	218	655	6.76	10 500	0.86	154	**2KJ3005 - ■ JU23 - ■ ■ P1**	
	235	610	6.28	10 500	0.93	154	**2KJ3005 - ■ JU23 - ■ ■ N1**	
	266	535	5.55	10 500	1.0	154	**2KJ3005 - ■ JU23 - ■ ■ M1**	
	298	480	4.95	10 500	1.2	154	**2KJ3005 - ■ JU23 - ■ ■ L1**	
	331	430	4.46	10 500	1.3	154	**2KJ3005 - ■ JU23 - ■ ■ K1**	
	381	375	3.87	10 500	1.5	154	**2KJ3005 - ■ JU23 - ■ ■ J1**	
	424	335	3.48	10 500	1.6	154	**2KJ3005 - ■ JU23 - ■ ■ H1**	
	485	295	3.04	10 500	1.8	154	**2KJ3005 - ■ JU23 - ■ ■ G1**	
	544	260	2.71	10 500	2.1	154	**2KJ3005 - ■ JU23 - ■ ■ F1**	
	617	230	2.39	10 200	2.3	154	**2KJ3005 - ■ JU23 - ■ ■ E1**	
	702	200	2.10	9 940	2.6	154	**2KJ3005 - ■ JU23 - ■ ■ D1**	

Article No. supplement		
Shaft design	**1 or 9**	➞ page 10/43
Frequency and voltage	**2 or 9**	➞ page 11/2
Gearbox mounting type	**A, B, F or H**	➞ page 10/37

© Siemens AG 2017

3

Selection and ordering data (continued)

P_{rated} kW	n_2 rpm	T_2 Nm	i -	F_{R2} N	f_B -	m kg	Article No. (Article No. supplement ➞ below)	Order code No. of poles
15	**E.109-LE160ZLL4P**							
	806	178	1.83	9 590	3.0	154	**2KJ3005 - ■ JU23 - ■ ■ C1**	
	883	162	1.67	9 390	3.3	154	**2KJ3005 - ■ JU23 - ■ ■ B1**	
	1 031	139	1.43	9 040	3.3	154	**2KJ3005 - ■ JU23 - ■ ■ A1**	
	E.89-LE160ZLL4P							
	339	420	4.35	7 010	0.85	132	**2KJ3004 - ■ JU23 - ■ ■ K1**	
	382	375	3.86	7 190	0.96	132	**2KJ3004 - ■ JU23 - ■ ■ J1**	
	426	335	3.46	7 360	1.1	132	**2KJ3004 - ■ JU23 - ■ ■ H1**	
	498	285	2.96	7 470	1.3	132	**2KJ3004 - ■ JU23 - ■ ■ G1**	
	559	255	2.64	7 360	1.4	132	**2KJ3004 - ■ JU23 - ■ ■ F1**	
	633	225	2.33	7 210	1.6	132	**2KJ3004 - ■ JU23 - ■ ■ E1**	
	720	199	2.05	7 020	1.8	132	**2KJ3004 - ■ JU23 - ■ ■ D1**	
	829	173	1.78	6 830	2.1	132	**2KJ3004 - ■ JU23 - ■ ■ C1**	
	970	148	1.52	6 600	2.4	132	**2KJ3004 - ■ JU23 - ■ ■ B1**	
	1 135	126	1.30	6 370	2.9	132	**2KJ3004 - ■ JU23 - ■ ■ A1**	
18.5	**D.189-LES180MQ4P**							
	8.0	22 100	183.92	107 000	0.86	783	**2KJ3214 - ■ KL33 - ■ ■ N1**	
	8.9	19 800	164.36	107 000	0.96	783	**2KJ3214 - ■ KL33 - ■ ■ M1**	
	9.9	17 900	148.63	107 000	1.1	783	**2KJ3214 - ■ KL33 - ■ ■ L1**	
	11	15 800	131.17	107 000	1.2	783	**2KJ3214 - ■ KL33 - ■ ■ K1**	
	13	14 000	116.88	107 000	1.3	783	**2KJ3214 - ■ KL33 - ■ ■ J1**	
	14	12 700	105.89	107 000	1.5	783	**2KJ3214 - ■ KL33 - ■ ■ H1**	
	15	11 400	95.24	107 000	1.7	783	**2KJ3214 - ■ KL33 - ■ ■ G1**	
	19	9 540	79.14	107 000	2.0	783	**2KJ3214 - ■ KL33 - ■ ■ F1**	
	21	8 480	70.36	107 000	2.2	783	**2KJ3214 - ■ KL33 - ■ ■ E1**	
	D.169-LES180MQ4P							
	10	16 900	140.41	69 000	0.83	570	**2KJ3213 - ■ KL33 - ■ ■ M1**	
	12	15 100	125.28	69 700	0.93	570	**2KJ3213 - ■ KL33 - ■ ■ L1**	
	13	13 400	111.69	70 400	1.0	570	**2KJ3213 - ■ KL33 - ■ ■ K1**	
	15	11 900	99.06	70 900	1.2	570	**2KJ3213 - ■ KL33 - ■ ■ J1**	
	16	10 900	90.94	71 300	1.3	570	**2KJ3213 - ■ KL33 - ■ ■ H1**	
	18	9 660	80.12	71 700	1.4	570	**2KJ3213 - ■ KL33 - ■ ■ G1**	
	22	7 920	65.72	72 400	1.8	570	**2KJ3213 - ■ KL33 - ■ ■ F1**	
	25	6 950	57.63	72 800	2.0	570	**2KJ3213 - ■ KL33 - ■ ■ E1**	
	33	5 430	45.06	73 300	2.6	570	**2KJ3213 - ■ KL33 - ■ ■ D1**	
	Z.169-LES180MQ4P							
	40	4 400	36.55	73 700	2.7	553	**2KJ3113 - ■ KL33 - ■ ■ Q1**	
	D.149-LES180MQ4P							
	19	9 150	75.87	50 600	0.87	397	**2KJ3212 - ■ KL33 - ■ ■ H1**	
	21	8 280	68.71	51 000	0.97	397	**2KJ3212 - ■ KL33 - ■ ■ G1**	
	24	7 210	59.82	51 500	1.1	397	**2KJ3212 - ■ KL33 - ■ ■ F1**	
	30	5 910	49.05	50 500	1.4	397	**2KJ3212 - ■ KL33 - ■ ■ E1**	
	34	5 240	43.51	49 400	1.5	397	**2KJ3212 - ■ KL33 - ■ ■ D1**	
	37	4 750	39.41	48 400	1.7	397	**2KJ3212 - ■ KL33 - ■ ■ C1**	
	43	4 130	34.31	47 000	1.9	397	**2KJ3212 - ■ KL33 - ■ ■ B1**	
	Z.149-LES180MQ4P							
	48	3 660	30.39	45 800	2.2	415	**2KJ3112 - ■ KL33 - ■ ■ Q1**	
	54	3 260	27.07	44 600	2.5	415	**2KJ3112 - ■ KL33 - ■ ■ P1**	
	60	2 930	24.30	43 500	2.7	415	**2KJ3112 - ■ KL33 - ■ ■ N1**	
	68	2 610	21.69	42 300	3.1	415	**2KJ3112 - ■ KL33 - ■ ■ M1**	

Article No. supplement		
Shaft design	**1 or 9**	➞ page 10/43
Frequency and voltage	**2 or 9**	➞ page 11/2
Gearbox mounting type	**A, B, F or H**	➞ page 10/37

© Siemens AG 2017

Selection and ordering data (continued)

P_{rated}	n_2	T_2	i	F_{R2}	f_B	m	Article No.	Order code
kW	rpm	Nm	-	N	-	kg	(Article No. supplement ➞ below)	No. of poles
18.5	**Z.129-LES180MQ4P**							
	56	3 170	26.30	25 700	1.6	331	**2KJ3111 - ■ KL33 - ■ ■ P1**	
	63	2 820	23.41	25 200	1.8	331	**2KJ3111 - ■ KL33 - ■ ■ N1**	
	70	2 530	20.98	24 700	2.0	331	**2KJ3111 - ■ KL33 - ■ ■ M1**	
	79	2 240	18.60	24 200	2.2	331	**2KJ3111 - ■ KL33 - ■ ■ L1**	
	89	1 980	16.42	23 600	2.5	331	**2KJ3111 - ■ KL33 - ■ ■ K1**	
	102	1 740	14.43	23 000	2.8	331	**2KJ3111 - ■ KL33 - ■ ■ J1**	
	112	1 570	13.07	22 500	3.1	331	**2KJ3111 - ■ KL33 - ■ ■ H1**	
	129	1 370	11.38	21 800	3.5	331	**2KJ3111 - ■ KL33 - ■ ■ G1**	
	157	1 120	9.33	20 900	4.1	331	**2KJ3111 - ■ KL33 - ■ ■ F1**	
	172	1 020	8.53	20 200	3.5	331	**2KJ3111 - ■ KL33 - ■ ■ E1**	
	195	900	7.50	19 600	4.0	331	**2KJ3111 - ■ KL33 - ■ ■ D1**	
	216	815	6.79	19 100	4.4	331	**2KJ3111 - ■ KL33 - ■ ■ C1**	
	Z.109-LES180MQ4P							
	69	2 540	21.13	18 500	1.1	271	**2KJ3110 - ■ KL33 - ■ ■ P1**	
	79	2 220	18.47	18 300	1.2	271	**2KJ3110 - ■ KL33 - ■ ■ N1**	
	89	1 980	16.48	18 100	1.3	271	**2KJ3110 - ■ KL33 - ■ ■ M1**	
	101	1 750	14.52	17 700	1.5	271	**2KJ3110 - ■ KL33 - ■ ■ L1**	
	115	1 530	12.72	17 400	1.6	271	**2KJ3110 - ■ KL33 - ■ ■ K1**	
	132	1 330	11.09	17 000	1.8	271	**2KJ3110 - ■ KL33 - ■ ■ J1**	
	145	1 220	10.12	16 700	2.0	271	**2KJ3110 - ■ KL33 - ■ ■ H1**	
	168	1 050	8.71	16 300	2.3	271	**2KJ3110 - ■ KL33 - ■ ■ G1**	
	174	1 010	8.41	16 000	2.3	271	**2KJ3110 - ■ KL33 - ■ ■ F1**	
	198	890	7.41	15 600	2.6	271	**2KJ3110 - ■ KL33 - ■ ■ E1**	
	225	780	6.50	15 200	2.9	271	**2KJ3110 - ■ KL33 - ■ ■ D1**	
	259	680	5.66	14 700	3.4	271	**2KJ3110 - ■ KL33 - ■ ■ C1**	
	283	620	5.17	14 400	3.7	271	**2KJ3110 - ■ KL33 - ■ ■ B1**	
	329	535	4.45	13 900	4.0	271	**2KJ3110 - ■ KL33 - ■ ■ A1**	
	Z.89-LES180MQ4P							
	94	1 880	15.66	10 300	0.89	230	**2KJ3108 - ■ KL33 - ■ ■ L1**	
	106	1 660	13.84	11 700	1.0	230	**2KJ3108 - ■ KL33 - ■ ■ K1**	
	121	1 460	12.15	12 800	1.1	230	**2KJ3108 - ■ KL33 - ■ ■ J1**	
	138	1 270	10.58	13 800	1.2	230	**2KJ3108 - ■ KL33 - ■ ■ H1**	
	162	1 090	9.04	13 500	1.4	230	**2KJ3108 - ■ KL33 - ■ ■ G1**	
	189	930	7.74	13 200	1.6	230	**2KJ3108 - ■ KL33 - ■ ■ F1**	
	213	830	6.89	12 600	1.3	230	**2KJ3108 - ■ KL33 - ■ ■ E1**	
	242	730	6.05	12 700	1.5	230	**2KJ3108 - ■ KL33 - ■ ■ D1**	
	279	630	5.26	12 300	1.7	230	**2KJ3108 - ■ KL33 - ■ ■ C1**	
	326	540	4.50	11 800	2.0	230	**2KJ3108 - ■ KL33 - ■ ■ B1**	
	381	460	3.85	11 300	2.3	230	**2KJ3108 - ■ KL33 - ■ ■ A1**	
	E.149-LES180MQ4P							
	280	630	5.24	15 600	2.4	294	**2KJ3007 - ■ KL33 - ■ ■ L1**	
	314	560	4.67	15 200	2.6	294	**2KJ3007 - ■ KL33 - ■ ■ K1**	
	350	505	4.19	14 900	2.9	294	**2KJ3007 - ■ KL33 - ■ ■ J1**	
	392	450	3.74	14 500	3.3	294	**2KJ3007 - ■ KL33 - ■ ■ H1**	
	440	400	3.33	14 200	3.7	294	**2KJ3007 - ■ KL33 - ■ ■ G1**	
	495	355	2.96	13 800	4.1	294	**2KJ3007 - ■ KL33 - ■ ■ F1**	
	541	325	2.71	13 500	4.5	294	**2KJ3007 - ■ KL33 - ■ ■ E1**	
	613	285	2.39	13 100	5.1	294	**2KJ3007 - ■ KL33 - ■ ■ D1**	
	747	235	1.96	12 500	6.2	294	**2KJ3007 - ■ KL33 - ■ ■ C1**	

Article No. supplement		
Shaft design	**1 or 9**	➞ page 10/43
Frequency and voltage	**2 or 9**	➞ page 11/2
Gearbox mounting type	**A, B, F or H**	➞ page 10/37

© Siemens AG 2017

3

Selection and ordering data (continued)

P_{rated} kW	n_2 rpm	T_2 Nm	i -	F_{R2} N	f_B -	m kg	Article No. (Article No. supplement ➞ below)	Order code No. of poles
18.5	**E.129-LES180MQ4P**							
	356	495	4.12	12 400	1.6	255	**2KJ3006 - ■ KL33 - ■ ■ K1**	
	399	440	3.67	12 100	1.8	255	**2KJ3006 - ■ KL33 - ■ ■ J1**	
	445	395	3.29	11 900	2.0	255	**2KJ3006 - ■ KL33 - ■ ■ H1**	
	503	350	2.91	11 600	2.2	255	**2KJ3006 - ■ KL33 - ■ ■ G1**	
	570	310	2.57	11 300	2.5	255	**2KJ3006 - ■ KL33 - ■ ■ F1**	
	648	270	2.26	11 000	2.8	255	**2KJ3006 - ■ KL33 - ■ ■ E1**	
	715	245	2.05	10 800	3.1	255	**2KJ3006 - ■ KL33 - ■ ■ D1**	
	823	215	1.78	10 400	3.5	255	**2KJ3006 - ■ KL33 - ■ ■ C1**	
	1 003	176	1.46	9 970	4.3	255	**2KJ3006 - ■ KL33 - ■ ■ B1**	
	1 181	150	1.24	9 560	5.0	255	**2KJ3006 - ■ KL33 - ■ ■ A1**	
	E.109-LES180MQ4P							
	421	420	3.48	10 500	1.3	232	**2KJ3005 - ■ KL33 - ■ ■ H1**	
	482	365	3.04	10 400	1.5	232	**2KJ3005 - ■ KL33 - ■ ■ G1**	
	541	325	2.71	10 200	1.7	232	**2KJ3005 - ■ KL33 - ■ ■ F1**	
	613	285	2.39	9 950	1.9	232	**2KJ3005 - ■ KL33 - ■ ■ E1**	
	698	250	2.10	9 670	2.1	232	**2KJ3005 - ■ KL33 - ■ ■ D1**	
	801	220	1.83	9 360	2.4	232	**2KJ3005 - ■ KL33 - ■ ■ C1**	
	877	200	1.67	9 170	2.6	232	**2KJ3005 - ■ KL33 - ■ ■ B1**	
	1 024	172	1.43	8 850	2.7	232	**2KJ3005 - ■ KL33 - ■ ■ A1**	
	E.89-LES180MQ4P							
	555	315	2.64	6 310	1.1	208	**2KJ3004 - ■ KL33 - ■ ■ F1**	
	715	245	2.05	6 490	1.5	208	**2KJ3004 - ■ KL33 - ■ ■ D1**	
	823	215	1.78	6 470	1.7	208	**2KJ3004 - ■ KL33 - ■ ■ C1**	
	964	183	1.52	6 350	2.0	208	**2KJ3004 - ■ KL33 - ■ ■ B1**	
	1 127	157	1.30	6 150	2.3	208	**2KJ3004 - ■ KL33 - ■ ■ A1**	
22	**D.189-LES180ZLN4P**							
	8.9	23 400	164.36	107 000	0.81	788	**2KJ3214 - ■ KN33 - ■ ■ M1**	
	9.9	21 200	148.63	107 000	0.89	788	**2KJ3214 - ■ KN33 - ■ ■ L1**	
	11	18 700	131.17	107 000	1.0	788	**2KJ3214 - ■ KN33 - ■ ■ K1**	
	13	16 700	116.88	107 000	1.1	788	**2KJ3214 - ■ KN33 - ■ ■ J1**	
	14	15 100	105.89	107 000	1.3	788	**2KJ3214 - ■ KN33 - ■ ■ H1**	
	15	13 600	95.24	107 000	1.4	788	**2KJ3214 - ■ KN33 - ■ ■ G1**	
	19	11 300	79.14	107 000	1.7	788	**2KJ3214 - ■ KN33 - ■ ■ F1**	
	21	10 000	70.36	107 000	1.9	788	**2KJ3214 - ■ KN33 - ■ ■ E1**	
	26	8 010	56.08	107 000	2.4	788	**2KJ3214 - ■ KN33 - ■ ■ D1**	
	D.169-LES180ZLN4P							
	13	15 900	111.69	69 400	0.88	575	**2KJ3213 - ■ KN33 - ■ ■ K1**	
	15	14 100	99.06	70 100	0.99	575	**2KJ3213 - ■ KN33 - ■ ■ J1**	
	16	12 900	90.94	70 500	1.1	575	**2KJ3213 - ■ KN33 - ■ ■ H1**	
	18	11 400	80.12	71 000	1.2	575	**2KJ3213 - ■ KN33 - ■ ■ G1**	
	22	9 390	65.72	71 800	1.5	575	**2KJ3213 - ■ KN33 - ■ ■ F1**	
	26	8 230	57.63	72 300	1.7	575	**2KJ3213 - ■ KN33 - ■ ■ E1**	
	33	6 440	45.06	72 900	2.2	575	**2KJ3213 - ■ KN33 - ■ ■ D1**	
	35	5 920	41.43	73 100	2.4	575	**2KJ3213 - ■ KN33 - ■ ■ C1**	
	40	5 190	36.33	73 400	2.7	575	**2KJ3213 - ■ KN33 - ■ ■ B1**	
	Z.169-LES180ZLN4P							
	40	5 220	36.55	73 400	2.3	558	**2KJ3113 - ■ KN33 - ■ ■ Q1**	
	D.149-LES180ZLN4P							
	21	9 820	68.71	50 300	0.81	402	**2KJ3212 - ■ KN33 - ■ ■ G1**	

Article No. supplement		
Shaft design	**1 or 9**	➞ page 10/43
Frequency and voltage	**2 or 9**	➞ page 11/2
Gearbox mounting type	**A, B, F or H**	➞ page 10/37

© Siemens AG 2017

Selection and ordering data (continued)

P_{rated}	n_2	T_2	i	F_{R2}	f_B	m	Article No.	Order code
kW	rpm	Nm	-	N	-	kg	(Article No. supplement ➞ below)	No. of poles
22	**D.149-LES180ZLN4P**							
	25	8 550	59.82	50 500	0.94	402	**2KJ3212 - ■ KN33 - ■ ■ F1**	
	30	7 010	49.05	49 000	1.1	402	**2KJ3212 - ■ KN33 - ■ ■ E1**	
	34	6 210	43.51	48 000	1.3	402	**2KJ3212 - ■ KN33 - ■ ■ D1**	
	37	5 630	39.41	47 100	1.4	402	**2KJ3212 - ■ KN33 - ■ ■ C1**	
	43	4 900	34.31	45 900	1.6	402	**2KJ3212 - ■ KN33 - ■ ■ B1**	
	Z.149-LES180ZLN4P							
	48	4 340	30.39	44 800	1.8	420	**2KJ3112 - ■ KN33 - ■ ■ Q1**	
	54	3 860	27.07	43 700	2.1	420	**2KJ3112 - ■ KN33 - ■ ■ P1**	
	60	3 470	24.30	42 700	2.3	420	**2KJ3112 - ■ KN33 - ■ ■ N1**	
	68	3 100	21.69	41 600	2.6	420	**2KJ3112 - ■ KN33 - ■ ■ M1**	
	76	2 760	19.33	40 500	2.9	420	**2KJ3112 - ■ KN33 - ■ ■ L1**	
	86	2 450	17.15	39 400	3.3	420	**2KJ3112 - ■ KN33 - ■ ■ K1**	
	Z.129-LES180ZLN4P							
	56	3 750	26.30	24 600	1.3	336	**2KJ3111 - ■ KN33 - ■ ■ P1**	
	63	3 340	23.41	24 300	1.5	336	**2KJ3111 - ■ KN33 - ■ ■ N1**	
	70	2 990	20.98	23 900	1.7	336	**2KJ3111 - ■ KN33 - ■ ■ M1**	
	79	2 650	18.60	23 500	1.9	336	**2KJ3111 - ■ KN33 - ■ ■ L1**	
	90	2 340	16.42	23 000	2.1	336	**2KJ3111 - ■ KN33 - ■ ■ K1**	
	102	2 060	14.43	22 400	2.4	336	**2KJ3111 - ■ KN33 - ■ ■ J1**	
	112	1 860	13.07	22 000	2.6	336	**2KJ3111 - ■ KN33 - ■ ■ H1**	
	129	1 620	11.38	21 400	2.9	336	**2KJ3111 - ■ KN33 - ■ ■ G1**	
	158	1 330	9.33	20 500	3.5	336	**2KJ3111 - ■ KN33 - ■ ■ F1**	
	172	1 210	8.53	19 800	3.0	336	**2KJ3111 - ■ KN33 - ■ ■ E1**	
	196	1 070	7.50	19 200	3.4	336	**2KJ3111 - ■ KN33 - ■ ■ D1**	
	216	970	6.79	18 800	3.7	336	**2KJ3111 - ■ KN33 - ■ ■ C1**	
	249	845	5.91	18 200	4.3	336	**2KJ3111 - ■ KN33 - ■ ■ B1**	
	303	690	4.85	17 300	4.7	336	**2KJ3111 - ■ KN33 - ■ ■ A1**	
	Z.109-LES180ZLN4P							
	70	3 020	21.13	17 400	0.94	276	**2KJ3110 - ■ KN33 - ■ ■ P1**	
	80	2 640	18.47	17 300	1.0	276	**2KJ3110 - ■ KN33 - ■ ■ N1**	
	89	2 350	16.48	17 200	1.1	276	**2KJ3110 - ■ KN33 - ■ ■ M1**	
	101	2 070	14.52	17 000	1.2	276	**2KJ3110 - ■ KN33 - ■ ■ L1**	
	116	1 810	12.72	16 700	1.4	276	**2KJ3110 - ■ KN33 - ■ ■ K1**	
	133	1 580	11.09	16 400	1.6	276	**2KJ3110 - ■ KN33 - ■ ■ J1**	
	145	1 440	10.12	16 200	1.7	276	**2KJ3110 - ■ KN33 - ■ ■ H1**	
	169	1 240	8.71	15 800	1.9	276	**2KJ3110 - ■ KN33 - ■ ■ G1**	
	175	1 200	8.41	15 500	1.9	276	**2KJ3110 - ■ KN33 - ■ ■ F1**	
	198	1 050	7.41	15 200	2.2	276	**2KJ3110 - ■ KN33 - ■ ■ E1**	
	226	925	6.50	14 800	2.5	276	**2KJ3110 - ■ KN33 - ■ ■ D1**	
	260	805	5.66	14 400	2.8	276	**2KJ3110 - ■ KN33 - ■ ■ C1**	
	284	735	5.17	14 100	3.1	276	**2KJ3110 - ■ KN33 - ■ ■ B1**	
	330	635	4.45	13 700	3.4	276	**2KJ3110 - ■ KN33 - ■ ■ A1**	
	Z.89-LES180ZLN4P							
	106	1 970	13.84	7 850	0.85	235	**2KJ3108 - ■ KN33 - ■ ■ K1**	
	121	1 730	12.15	9 460	0.94	235	**2KJ3108 - ■ KN33 - ■ ■ J1**	
	139	1 510	10.58	10 800	1.1	235	**2KJ3108 - ■ KN33 - ■ ■ H1**	
	163	1 290	9.04	12 000	1.2	235	**2KJ3108 - ■ KN33 - ■ ■ G1**	
	190	1 100	7.74	12 700	1.4	235	**2KJ3108 - ■ KN33 - ■ ■ F1**	

Article No. supplement		
Shaft design	**1 or 9**	➞ page 10/43
Frequency and voltage	**2 or 9**	➞ page 11/2
Gearbox mounting type	**A, B, F or H**	➞ page 10/37

© Siemens AG 2017

3

Selection and ordering data (continued)

P_{rated} kW	n_2 rpm	T_2 Nm	i -	F_{R2} N	f_B -	m kg	Article No. (Article No. supplement ➞ below)	Order code No. of poles
22	**Z.89-LES180ZLN4P**							
	213	985	6.89	10 200	1.1	235	**2KJ3108 - ■ KN33 - ■ ■ E1**	
	243	865	6.05	10 900	1.2	235	**2KJ3108 - ■ KN33 - ■ ■ D1**	
	279	750	5.26	11 600	1.4	235	**2KJ3108 - ■ KN33 - ■ ■ C1**	
	327	640	4.50	11 500	1.6	235	**2KJ3108 - ■ KN33 - ■ ■ B1**	
	382	550	3.85	11 100	1.9	235	**2KJ3108 - ■ KN33 - ■ ■ A1**	
	E.149-LES180ZLN4P							
	281	745	5.24	15 000	2.0	299	**2KJ3007 - ■ KN33 - ■ ■ L1**	
	315	665	4.67	14 700	2.2	299	**2KJ3007 - ■ KN33 - ■ ■ K1**	
	351	595	4.19	14 500	2.5	299	**2KJ3007 - ■ KN33 - ■ ■ J1**	
	393	535	3.74	14 100	2.8	299	**2KJ3007 - ■ KN33 - ■ ■ H1**	
	441	475	3.33	13 800	3.1	299	**2KJ3007 - ■ KN33 - ■ ■ G1**	
	497	420	2.96	13 500	3.5	299	**2KJ3007 - ■ KN33 - ■ ■ F1**	
	542	385	2.71	13 200	3.8	299	**2KJ3007 - ■ KN33 - ■ ■ E1**	
	615	340	2.39	12 800	4.3	299	**2KJ3007 - ■ KN33 - ■ ■ D1**	
	750	280	1.96	12 200	5.2	299	**2KJ3007 - ■ KN33 - ■ ■ C1**	
	855	245	1.72	11 900	5.9	299	**2KJ3007 - ■ KN33 - ■ ■ B1**	
	1 097	192	1.34	11 100	6.7	299	**2KJ3007 - ■ KN33 - ■ ■ A1**	
	E.129-LES180ZLN4P							
	357	585	4.12	11 900	1.3	260	**2KJ3006 - ■ KN33 - ■ ■ K1**	
	401	525	3.67	11 600	1.5	260	**2KJ3006 - ■ KN33 - ■ ■ J1**	
	447	470	3.29	11 400	1.7	260	**2KJ3006 - ■ KN33 - ■ ■ H1**	
	505	415	2.91	11 200	1.9	260	**2KJ3006 - ■ KN33 - ■ ■ G1**	
	572	365	2.57	11 000	2.1	260	**2KJ3006 - ■ KN33 - ■ ■ F1**	
	650	320	2.26	10 700	2.4	260	**2KJ3006 - ■ KN33 - ■ ■ E1**	
	717	290	2.05	10 500	2.6	260	**2KJ3006 - ■ KN33 - ■ ■ D1**	
	826	250	1.78	10 200	3.0	260	**2KJ3006 - ■ KN33 - ■ ■ C1**	
	1 007	205	1.46	9 760	3.6	260	**2KJ3006 - ■ KN33 - ■ ■ B1**	
	1 185	177	1.24	9 360	4.2	260	**2KJ3006 - ■ KN33 - ■ ■ A1**	
	E.109-LES180ZLN4P							
	422	495	3.48	10 200	1.1	237	**2KJ3005 - ■ KN33 - ■ ■ H1**	
	484	430	3.04	10 000	1.3	237	**2KJ3005 - ■ KN33 - ■ ■ G1**	
	542	385	2.71	9 850	1.4	237	**2KJ3005 - ■ KN33 - ■ ■ F1**	
	615	340	2.39	9 620	1.6	237	**2KJ3005 - ■ KN33 - ■ ■ E1**	
	700	300	2.10	9 360	1.8	237	**2KJ3005 - ■ KN33 - ■ ■ D1**	
	803	260	1.83	9 110	2.0	237	**2KJ3005 - ■ KN33 - ■ ■ C1**	
	880	235	1.67	8 950	2.2	237	**2KJ3005 - ■ KN33 - ■ ■ B1**	
	1 028	200	1.43	8 660	2.3	237	**2KJ3005 - ■ KN33 - ■ ■ A1**	
	E.89-LES180ZLN4P							
	557	375	2.64	5 080	0.95	213	**2KJ3004 - ■ KN33 - ■ ■ F1**	
	967	215	1.52	5 660	1.7	213	**2KJ3004 - ■ KN33 - ■ ■ B1**	
	1 131	186	1.30	5 600	1.9	213	**2KJ3004 - ■ KN33 - ■ ■ A1**	
30	**D.189-LES200ZLU4P**							
	13	22 700	116.88	107 000	0.83	858	**2KJ3214 - ■ LN33 - ■ ■ J1**	
	14	20 600	105.89	107 000	0.92	858	**2KJ3214 - ■ LN33 - ■ ■ H1**	
	15	18 500	95.24	107 000	1.0	858	**2KJ3214 - ■ LN33 - ■ ■ G1**	
	19	15 400	79.14	107 000	1.2	858	**2KJ3214 - ■ LN33 - ■ ■ F1**	
	21	13 700	70.36	107 000	1.4	858	**2KJ3214 - ■ LN33 - ■ ■ E1**	
	26	10 900	56.08	107 000	1.7	858	**2KJ3214 - ■ LN33 - ■ ■ D1**	
	33	8 690	44.63	107 000	2.2	858	**2KJ3214 - ■ LN33 - ■ ■ C1**	

Article No. supplement		
Shaft design	**1 or 9**	➞ page 10/43
Frequency and voltage	**2 or 9**	➞ page 11/2
Gearbox mounting type	**A, B, F or H**	➞ page 10/37

© Siemens AG 2017

Selection and ordering data (continued)

P_{rated}	n_2	T_2	i	F_{R2}	f_B	m	Article No.	Order code
kW	rpm	Nm	-	N	-	kg	(Article No. supplement ➞ below)	No. of poles
30	**D.189-LES200ZLU4P**							
	40	7 140	36.67	107 000	2.7	858	**2KJ3214 - ■ LN33 - ■ ■ B1**	
	D.169-LES200ZLU4P							
	18	15 600	80.12	69 500	0.9	645	**2KJ3213 - ■ LN33 - ■ ■ G1**	
	22	12 800	65.72	70 600	1.1	645	**2KJ3213 - ■ LN33 - ■ ■ F1**	
	26	11 200	57.63	71 100	1.2	645	**2KJ3213 - ■ LN33 - ■ ■ E1**	
	33	8 780	45.06	72 100	1.6	645	**2KJ3213 - ■ LN33 - ■ ■ D1**	
	35	8 070	41.43	72 300	1.7	645	**2KJ3213 - ■ LN33 - ■ ■ C1**	
	40	7 080	36.33	72 700	2.0	645	**2KJ3213 - ■ LN33 - ■ ■ B1**	
	Z.169-LES200ZLU4P							
	45	6 400	32.88	72 900	2.2	634	**2KJ3113 - ■ LN33 - ■ ■ P1**	
	50	5 720	29.38	73 200	2.4	634	**2KJ3113 - ■ LN33 - ■ ■ N1**	
	55	5 170	26.57	73 400	2.7	634	**2KJ3113 - ■ LN33 - ■ ■ M1**	
	D.149-LES200ZLU4P							
	30	9 560	49.05	45 500	0.84	472	**2KJ3212 - ■ LN33 - ■ ■ E1**	
	34	8 480	43.51	44 900	0.94	472	**2KJ3212 - ■ LN33 - ■ ■ D1**	
	37	7 680	39.41	44 300	1.0	472	**2KJ3212 - ■ LN33 - ■ ■ C1**	
	43	6 680	34.31	43 500	1.2	472	**2KJ3212 - ■ LN33 - ■ ■ B1**	
	Z.149-LES200ZLU4P							
	54	5 270	27.07	41 800	1.5	494	**2KJ3112 - ■ LN33 - ■ ■ P1**	
	60	4 730	24.30	41 000	1.7	494	**2KJ3112 - ■ LN33 - ■ ■ N1**	
	68	4 220	21.69	40 100	1.9	494	**2KJ3112 - ■ LN33 - ■ ■ M1**	
	76	3 760	19.33	39 100	2.1	494	**2KJ3112 - ■ LN33 - ■ ■ L1**	
	86	3 340	17.15	38 100	2.4	494	**2KJ3112 - ■ LN33 - ■ ■ K1**	
	93	3 060	15.74	37 400	2.6	494	**2KJ3112 - ■ LN33 - ■ ■ J1**	
	106	2 700	13.87	36 400	3.0	494	**2KJ3112 - ■ LN33 - ■ ■ H1**	
	129	2 210	11.38	34 700	3.6	494	**2KJ3112 - ■ LN33 - ■ ■ G1**	
	202	1 410	7.27	31 200	3.4	494	**2KJ3112 - ■ LN33 - ■ ■ D1**	
	247	1 160	5.96	29 600	4.2	494	**2KJ3112 - ■ LN33 - ■ ■ C1**	
	281	1 010	5.23	28 600	4.8	494	**2KJ3112 - ■ LN33 - ■ ■ B1**	
	Z.129-LES200ZLU4P							
	63	4 560	23.41	22 200	1.1	411	**2KJ3111 - ■ LN33 - ■ ■ N1**	
	70	4 080	20.98	22 000	1.2	411	**2KJ3111 - ■ LN33 - ■ ■ M1**	
	79	3 620	18.60	21 800	1.4	411	**2KJ3111 - ■ LN33 - ■ ■ L1**	
	90	3 200	16.42	21 500	1.6	411	**2KJ3111 - ■ LN33 - ■ ■ K1**	
	102	2 810	14.43	21 100	1.8	411	**2KJ3111 - ■ LN33 - ■ ■ J1**	
	112	2 540	13.07	20 800	1.9	411	**2KJ3111 - ■ LN33 - ■ ■ H1**	
	129	2 210	11.38	20 400	2.1	411	**2KJ3111 - ■ LN33 - ■ ■ G1**	
	158	1 810	9.33	19 600	2.6	411	**2KJ3111 - ■ LN33 - ■ ■ F1**	
	172	1 660	8.53	18 900	2.2	411	**2KJ3111 - ■ LN33 - ■ ■ E1**	
	196	1 460	7.50	18 400	2.5	411	**2KJ3111 - ■ LN33 - ■ ■ D1**	
	216	1 320	6.79	18 100	2.7	411	**2KJ3111 - ■ LN33 - ■ ■ C1**	
	249	1 150	5.91	17 600	3.1	411	**2KJ3111 - ■ LN33 - ■ ■ B1**	
	303	945	4.85	16 800	3.5	411	**2KJ3111 - ■ LN33 - ■ ■ A1**	
	Z.109-LES200ZLU4P							
	89	3 210	16.48	15 200	0.82	351	**2KJ3110 - ■ LN33 - ■ ■ M1**	
	101	2 830	14.52	15 200	0.91	351	**2KJ3110 - ■ LN33 - ■ ■ L1**	
	116	2 470	12.72	15 200	1.0	351	**2KJ3110 - ■ LN33 - ■ ■ K1**	
	133	2 160	11.09	15 100	1.1	351	**2KJ3110 - ■ LN33 - ■ ■ J1**	
	145	1 970	10.12	15 000	1.2	351	**2KJ3110 - ■ LN33 - ■ ■ H1**	

Article No. supplement		
Shaft design	**1 or 9**	➞ page 10/43
Frequency and voltage	**2 or 9**	➞ page 11/2
Gearbox mounting type	**A, B, F or H**	➞ page 10/37

© Siemens AG 2017

3

Selection and ordering data (continued)

P_{rated} kW	n_2 rpm	T_2 Nm	i -	F_{R2} N	f_B -	m kg	Article No. (Article No. supplement ➞ below)	Order code No. of poles
30	**Z.109-LES200ZLU4P**							
	169	1 690	8.71	14 800	1.4	351	**2KJ3110 - ■ LN33 - ■ ■ G1**	
	175	1 630	8.41	14 400	1.4	351	**2KJ3110 - ■ LN33 - ■ ■ F1**	
	198	1 440	7.41	14 200	1.6	351	**2KJ3110 - ■ LN33 - ■ ■ E1**	
	226	1 260	6.50	13 900	1.8	351	**2KJ3110 - ■ LN33 - ■ ■ D1**	
	260	1 100	5.66	13 600	2.1	351	**2KJ3110 - ■ LN33 - ■ ■ C1**	
	284	1 000	5.17	13 500	2.3	351	**2KJ3110 - ■ LN33 - ■ ■ B1**	
	330	865	4.45	13 100	2.5	351	**2KJ3110 - ■ LN33 - ■ ■ A1**	
	E.149-LES200ZLU4P							
	315	910	4.67	13 600	1.6	374	**2KJ3007 - ■ LN33 - ■ ■ K1**	
	351	815	4.19	13 500	1.8	374	**2KJ3007 - ■ LN33 - ■ ■ J1**	
	393	725	3.74	13 200	2.0	374	**2KJ3007 - ■ LN33 - ■ ■ H1**	
	441	645	3.33	13 000	2.3	374	**2KJ3007 - ■ LN33 - ■ ■ G1**	
	497	575	2.96	12 700	2.5	374	**2KJ3007 - ■ LN33 - ■ ■ F1**	
	542	525	2.71	12 600	2.8	374	**2KJ3007 - ■ LN33 - ■ ■ E1**	
	615	465	2.39	12 200	3.1	374	**2KJ3007 - ■ LN33 - ■ ■ D1**	
	750	380	1.96	11 700	3.8	374	**2KJ3007 - ■ LN33 - ■ ■ C1**	
	855	335	1.72	11 400	4.4	374	**2KJ3007 - ■ LN33 - ■ ■ B1**	
	1 097	260	1.34	10 800	4.9	374	**2KJ3007 - ■ LN33 - ■ ■ A1**	
	E.129-LES200ZLU4P							
	401	715	3.67	10 200	1.1	335	**2KJ3006 - ■ LN33 - ■ ■ J1**	
	447	640	3.29	10 400	1.2	335	**2KJ3006 - ■ LN33 - ■ ■ H1**	
	505	565	2.91	10 300	1.4	335	**2KJ3006 - ■ LN33 - ■ ■ G1**	
	572	500	2.57	10 200	1.5	335	**2KJ3006 - ■ LN33 - ■ ■ F1**	
	650	440	2.26	10 000	1.7	335	**2KJ3006 - ■ LN33 - ■ ■ E1**	
	717	400	2.05	9 830	1.9	335	**2KJ3006 - ■ LN33 - ■ ■ D1**	
	826	345	1.78	9 610	2.2	335	**2KJ3006 - ■ LN33 - ■ ■ C1**	
	1 007	285	1.46	9 220	2.7	335	**2KJ3006 - ■ LN33 - ■ ■ B1**	
	1 185	240	1.24	8 910	3.1	335	**2KJ3006 - ■ LN33 - ■ ■ A1**	
	E.109-LES200ZLU4P							
	484	590	3.04	7 660	0.92	312	**2KJ3005 - ■ LN33 - ■ ■ G1**	
	542	525	2.71	7 980	1.0	312	**2KJ3005 - ■ LN33 - ■ ■ F1**	
	803	355	1.83	8 310	1.5	312	**2KJ3005 - ■ LN33 - ■ ■ C1**	
	880	325	1.67	8 320	1.6	312	**2KJ3005 - ■ LN33 - ■ ■ B1**	
	1 028	275	1.43	8 180	1.7	312	**2KJ3005 - ■ LN33 - ■ ■ A1**	
37	**D.189-LES225SD4P**							
	16	22 700	95.24	107 000	0.83	935	**2KJ3214 - ■ MF33 - ■ ■ G1**	
	19	18 900	79.14	107 000	1.0	935	**2KJ3214 - ■ MF33 - ■ ■ F1**	
	21	16 800	70.36	107 000	1.1	935	**2KJ3214 - ■ MF33 - ■ ■ E1**	
	26	13 400	56.08	107 000	1.4	935	**2KJ3214 - ■ MF33 - ■ ■ D1**	
	33	10 600	44.63	107 000	1.8	935	**2KJ3214 - ■ MF33 - ■ ■ C1**	
	Z.189-LES225SD4P							
	43	8 180	34.25	107 000	2.3	853	**2KJ3114 - ■ MF33 - ■ ■ L1**	
	48	7 340	30.73	107 000	2.6	853	**2KJ3114 - ■ MF33 - ■ ■ K1**	
	54	6 560	27.46	105 100	2.9	853	**2KJ3114 - ■ MF33 - ■ ■ J1**	
	D.169-LES225SD4P							
	22	15 700	65.72	69 500	0.89	721	**2KJ3213 - ■ MF33 - ■ ■ F1**	
	26	13 700	57.63	70 200	1.0	721	**2KJ3213 - ■ MF33 - ■ ■ E1**	
	33	10 700	45.06	71 300	1.3	721	**2KJ3213 - ■ MF33 - ■ ■ D1**	
	36	9 900	41.43	71 700	1.4	721	**2KJ3213 - ■ MF33 - ■ ■ C1**	

Article No. supplement		
Shaft design	**1 or 9**	➞ page 10/43
Frequency and voltage	**2 or 9**	➞ page 11/2
Gearbox mounting type	**A, B, F or H**	➞ page 10/37

© Siemens AG 2017

Selection and ordering data (continued)

P_{rated}	n_2	T_2	i	F_{R2}	f_B	m	Article No.	Order code
kW	rpm	Nm	-	N	-	kg	(Article No. supplement ➞ below)	No. of poles
37	**D.169-LES225SD4P**							
	41	8 680	36.33	72 100	1.6	721	**2KJ3213 - ■ MF33 - ■ ■ B1**	
	Z.169-LES225SD4P							
	50	7 020	29.38	72 700	2.0	677	**2KJ3113 - ■ MF33 - ■ ■ N1**	
	56	6 350	26.57	72 100	2.2	677	**2KJ3113 - ■ MF33 - ■ ■ M1**	
	63	5 600	23.45	70 000	2.5	677	**2KJ3113 - ■ MF33 - ■ ■ L1**	
	71	4 990	20.90	68 200	2.8	677	**2KJ3113 - ■ MF33 - ■ ■ K1**	
	78	4 520	18.93	66 600	3.1	677	**2KJ3113 - ■ MF33 - ■ ■ J1**	
	D.149-LES225SD4P							
	38	9 420	39.41	41 900	0.85	546	**2KJ3212 - ■ MF33 - ■ ■ C1**	
	43	8 200	34.31	41 300	0.98	546	**2KJ3212 - ■ MF33 - ■ ■ B1**	
	53	6 720	28.13	40 300	1.2	546	**2KJ3212 - ■ MF33 - ■ ■ A1**	
	Z.149-LES225SD4P							
	61	5 800	24.30	39 400	1.4	539	**2KJ3112 - ■ MF33 - ■ ■ N1**	
	68	5 180	21.69	38 700	1.5	539	**2KJ3112 - ■ MF33 - ■ ■ M1**	
	76	4 620	19.33	37 900	1.7	539	**2KJ3112 - ■ MF33 - ■ ■ L1**	
	86	4 100	17.15	37 000	2.0	539	**2KJ3112 - ■ MF33 - ■ ■ K1**	
	94	3 760	15.74	36 400	2.1	539	**2KJ3112 - ■ MF33 - ■ ■ J1**	
	107	3 310	13.87	35 500	2.4	539	**2KJ3112 - ■ MF33 - ■ ■ H1**	
	130	2 720	11.38	34 000	2.9	539	**2KJ3112 - ■ MF33 - ■ ■ G1**	
	148	2 380	9.98	33 000	3.4	539	**2KJ3112 - ■ MF33 - ■ ■ F1**	
	189	1 860	7.80	31 100	4.3	539	**2KJ3112 - ■ MF33 - ■ ■ E1**	
	203	1 730	7.27	30 700	2.8	539	**2KJ3112 - ■ MF33 - ■ ■ D1**	
	248	1 420	5.96	29 200	3.4	539	**2KJ3112 - ■ MF33 - ■ ■ C1**	
	283	1 250	5.23	28 200	3.9	539	**2KJ3112 - ■ MF33 - ■ ■ B1**	
	361	975	4.09	26 400	5.0	539	**2KJ3112 - ■ MF33 - ■ ■ A1**	
	Z.129-LES225SD4P							
	70	5 010	20.98	20 400	1.0	455	**2KJ3111 - ■ MF33 - ■ ■ M1**	
	79	4 440	18.60	20 300	1.1	455	**2KJ3111 - ■ MF33 - ■ ■ L1**	
	90	3 920	16.42	20 200	1.3	455	**2KJ3111 - ■ MF33 - ■ ■ K1**	
	102	3 450	14.43	20 000	1.4	455	**2KJ3111 - ■ MF33 - ■ ■ J1**	
	113	3 120	13.07	19 800	1.6	455	**2KJ3111 - ■ MF33 - ■ ■ H1**	
	130	2 720	11.38	19 500	1.7	455	**2KJ3111 - ■ MF33 - ■ ■ G1**	
	158	2 230	9.33	18 900	2.1	455	**2KJ3111 - ■ MF33 - ■ ■ F1**	
	173	2 030	8.53	18 100	1.8	455	**2KJ3111 - ■ MF33 - ■ ■ E1**	
	197	1 790	7.50	17 800	2.0	455	**2KJ3111 - ■ MF33 - ■ ■ D1**	
	218	1 620	6.79	17 500	2.2	455	**2KJ3111 - ■ MF33 - ■ ■ C1**	
	250	1 410	5.91	17 000	2.6	455	**2KJ3111 - ■ MF33 - ■ ■ B1**	
	305	1 160	4.85	16 400	2.8	455	**2KJ3111 - ■ MF33 - ■ ■ A1**	
	Z.109-LES225SD4P							
	116	3 040	12.72	13 800	0.83	393	**2KJ3110 - ■ MF33 - ■ ■ K1**	
	133	2 650	11.09	13 900	0.93	393	**2KJ3110 - ■ MF33 - ■ ■ J1**	
	146	2 410	10.12	13 900	1.0	393	**2KJ3110 - ■ MF33 - ■ ■ H1**	
	170	2 080	8.71	13 800	1.1	393	**2KJ3110 - ■ MF33 - ■ ■ G1**	
	176	2 010	8.41	13 400	1.1	393	**2KJ3110 - ■ MF33 - ■ ■ F1**	
	199	1 770	7.41	13 300	1.3	393	**2KJ3110 - ■ MF33 - ■ ■ E1**	
	227	1 550	6.50	13 200	1.5	393	**2KJ3110 - ■ MF33 - ■ ■ D1**	
	261	1 350	5.66	13 000	1.7	393	**2KJ3110 - ■ MF33 - ■ ■ C1**	
	286	1 230	5.17	12 800	1.8	393	**2KJ3110 - ■ MF33 - ■ ■ B1**	
	332	1 060	4.45	12 600	2.0	393	**2KJ3110 - ■ MF33 - ■ ■ A1**	

Article No. supplement		
Shaft design	**1 or 9**	➞ page 10/43
Frequency and voltage	**2 or 9**	➞ page 11/2
Gearbox mounting type	**A, B, F or H**	➞ page 10/37

© Siemens AG 2017

3

Selection and ordering data (continued)

P_{rated} kW	n_2 rpm	T_2 Nm	i -	F_{R2} N	f_B -	m kg	Article No. (Article No. supplement ➞ below)	Order code No. of poles
37	**E.149-LES225SD4P**							
	353	1 000	4.19	12 600	1.5	419	**2KJ3007 - ■ MF33 - ■ ■ J1**	
	395	890	3.74	12 500	1.7	419	**2KJ3007 - ■ MF33 - ■ ■ H1**	
	444	795	3.33	12 300	1.9	419	**2KJ3007 - ■ MF33 - ■ ■ G1**	
	499	705	2.96	12 100	2.1	419	**2KJ3007 - ■ MF33 - ■ ■ F1**	
	545	645	2.71	12 000	2.3	419	**2KJ3007 - ■ MF33 - ■ ■ E1**	
	618	570	2.39	11 700	2.6	419	**2KJ3007 - ■ MF33 - ■ ■ D1**	
	754	465	1.96	11 300	3.1	419	**2KJ3007 - ■ MF33 - ■ ■ C1**	
	859	410	1.72	11 000	3.6	419	**2KJ3007 - ■ MF33 - ■ ■ B1**	
	1103	320	1.34	10 400	4.0	419	**2KJ3007 - ■ MF33 - ■ ■ A1**	
	E.129-LES225SD4P							
	449	785	3.29	8 430	0.99	379	**2KJ3006 - ■ MF33 - ■ ■ H1**	
	508	695	2.91	8 760	1.1	379	**2KJ3006 - ■ MF33 - ■ ■ G1**	
	721	490	2.05	9 140	1.6	379	**2KJ3006 - ■ MF33 - ■ ■ D1**	
	830	425	1.78	9 070	1.8	379	**2KJ3006 - ■ MF33 - ■ ■ C1**	
	1012	345	1.46	8 790	2.2	379	**2KJ3006 - ■ MF33 - ■ ■ B1**	
	1192	295	1.24	8 500	2.5	379	**2KJ3006 - ■ MF33 - ■ ■ A1**	
	E.109-LES225SD4P							
	545	645	2.71	5 910	0.84	354	**2KJ3005 - ■ MF33 - ■ ■ F1**	
45	**D.189-LES225YMF4P**							
	19	23 000	79.14	107 000	0.83	980	**2KJ3214 - ■ MT33 - ■ ■ F1**	
	21	20 400	70.36	107 000	0.93	980	**2KJ3214 - ■ MT33 - ■ ■ E1**	
	26	16 300	56.08	107 000	1.2	980	**2KJ3214 - ■ MT33 - ■ ■ D1**	
	33	12 900	44.63	107 000	1.5	980	**2KJ3214 - ■ MT33 - ■ ■ C1**	
	Z.189-LES225YMF4P							
	43	9 950	34.25	107 000	1.9	898	**2KJ3114 - ■ MT33 - ■ ■ L1**	
	48	8 930	30.73	106 700	2.1	898	**2KJ3114 - ■ MT33 - ■ ■ K1**	
	54	7 980	27.46	103 800	2.4	898	**2KJ3114 - ■ MT33 - ■ ■ J1**	
	60	7 130	24.53	100 900	2.7	898	**2KJ3114 - ■ MT33 - ■ ■ H1**	
	66	6 520	22.44	98 600	2.9	898	**2KJ3114 - ■ MT33 - ■ ■ G1**	
	D.169-LES225YMF4P							
	26	16 700	57.63	69 100	0.84	766	**2KJ3213 - ■ MT33 - ■ ■ E1**	
	33	13 100	45.06	70 500	1.1	766	**2KJ3213 - ■ MT33 - ■ ■ D1**	
	36	12 000	41.43	70 900	1.2	766	**2KJ3213 - ■ MT33 - ■ ■ C1**	
	41	10 500	36.33	71 400	1.3	766	**2KJ3213 - ■ MT33 - ■ ■ B1**	
	Z.169-LES225YMF4P							
	50	8 540	29.38	71 800	1.6	722	**2KJ3113 - ■ MT33 - ■ ■ N1**	
	56	7 720	26.57	70 400	1.8	722	**2KJ3113 - ■ MT33 - ■ ■ M1**	
	63	6 810	23.45	68 600	2.1	722	**2KJ3113 - ■ MT33 - ■ ■ L1**	
	71	6 070	20.90	66 900	2.3	722	**2KJ3113 - ■ MT33 - ■ ■ K1**	
	78	5 500	18.93	65 400	2.5	722	**2KJ3113 - ■ MT33 - ■ ■ J1**	
	87	4 950	17.03	63 800	2.8	722	**2KJ3113 - ■ MT33 - ■ ■ H1**	
	104	4 110	14.15	61 100	3.4	722	**2KJ3113 - ■ MT33 - ■ ■ G1**	
	201	2 140	7.37	51 700	3.7	722	**2KJ3113 - ■ MT33 - ■ ■ C1**	
	251	1 710	5.88	48 700	4.6	722	**2KJ3113 - ■ MT33 - ■ ■ B1**	
	D.149-LES225YMF4P							
	43	9 970	34.31	38 900	0.8	591	**2KJ3212 - ■ MT33 - ■ ■ B1**	
	53	8 170	28.13	38 300	0.98	591	**2KJ3212 - ■ MT33 - ■ ■ A1**	
	Z.149-LES225YMF4P							
	61	7 060	24.30	37 700	1.1	584	**2KJ3112 - ■ MT33 - ■ ■ N1**	

Article No. supplement		
Shaft design	**1 or 9**	➞ page 10/43
Frequency and voltage	**2 or 9**	➞ page 11/2
Gearbox mounting type	**A, B, F or H**	➞ page 10/37

© Siemens AG 2017

Selection and ordering data (continued)

P_{rated}	n_2	T_2	i	F_{R2}	f_B	m	Article No.	Order code
kW	rpm	Nm	-	N	-	kg	(Article No. supplement ➞ below)	No. of poles
45	**Z.149-LES225YMF4P**							
	68	6 300	21.69	37 100	1.3	584	**2KJ3112 - ■ MT33 - ■ ■ M1**	
	76	5 620	19.33	36 500	1.4	584	**2KJ3112 - ■ MT33 - ■ ■ L1**	
	86	4 980	17.15	35 800	1.6	584	**2KJ3112 - ■ MT33 - ■ ■ K1**	
	94	4 570	15.74	35 300	1.7	584	**2KJ3112 - ■ MT33 - ■ ■ J1**	
	107	4 030	13.87	34 500	2.0	584	**2KJ3112 - ■ MT33 - ■ ■ H1**	
	130	3 300	11.38	33 200	2.4	584	**2KJ3112 - ■ MT33 - ■ ■ G1**	
	148	2 900	9.98	32 300	2.8	584	**2KJ3112 - ■ MT33 - ■ ■ F1**	
	189	2 260	7.80	30 600	3.5	584	**2KJ3112 - ■ MT33 - ■ ■ E1**	
	203	2 110	7.27	30 200	2.3	584	**2KJ3112 - ■ MT33 - ■ ■ D1**	
	248	1 730	5.96	28 800	2.8	584	**2KJ3112 - ■ MT33 - ■ ■ C1**	
	283	1 520	5.23	27 900	3.2	584	**2KJ3112 - ■ MT33 - ■ ■ B1**	
	361	1 180	4.09	26 200	4.1	584	**2KJ3112 - ■ MT33 - ■ ■ A1**	
	Z.129-LES225YMF4P							
	70	6 100	20.98	12 900	0.82	500	**2KJ3111 - ■ MT33 - ■ ■ M1**	
	79	5 400	18.60	16 700	0.92	500	**2KJ3111 - ■ MT33 - ■ ■ L1**	
	90	4 770	16.42	18 700	1.0	500	**2KJ3111 - ■ MT33 - ■ ■ K1**	
	102	4 190	14.43	18 700	1.2	500	**2KJ3111 - ■ MT33 - ■ ■ J1**	
	113	3 800	13.07	18 600	1.3	500	**2KJ3111 - ■ MT33 - ■ ■ H1**	
	130	3 300	11.38	18 500	1.4	500	**2KJ3111 - ■ MT33 - ■ ■ G1**	
	158	2 710	9.33	18 100	1.7	500	**2KJ3111 - ■ MT33 - ■ ■ F1**	
	173	2 480	8.53	17 200	1.5	500	**2KJ3111 - ■ MT33 - ■ ■ E1**	
	197	2 180	7.50	17 000	1.7	500	**2KJ3111 - ■ MT33 - ■ ■ D1**	
	218	1 970	6.79	16 800	1.8	500	**2KJ3111 - ■ MT33 - ■ ■ C1**	
	250	1 710	5.91	16 400	2.1	500	**2KJ3111 - ■ MT33 - ■ ■ B1**	
	305	1 410	4.85	15 900	2.3	500	**2KJ3111 - ■ MT33 - ■ ■ A1**	
	Z.109-LES225YMF4P							
	146	2 940	10.12	12 700	0.83	438	**2KJ3110 - ■ MT33 - ■ ■ H1**	
	170	2 530	8.71	12 800	0.94	438	**2KJ3110 - ■ MT33 - ■ ■ G1**	
	176	2 440	8.41	12 300	0.94	438	**2KJ3110 - ■ MT33 - ■ ■ F1**	
	199	2 150	7.41	12 400	1.1	438	**2KJ3110 - ■ MT33 - ■ ■ E1**	
	227	1 890	6.50	12 300	1.2	438	**2KJ3110 - ■ MT33 - ■ ■ D1**	
	261	1 640	5.66	12 300	1.4	438	**2KJ3110 - ■ MT33 - ■ ■ C1**	
	286	1 500	5.17	12 200	1.5	438	**2KJ3110 - ■ MT33 - ■ ■ B1**	
	332	1 290	4.45	12 000	1.7	438	**2KJ3110 - ■ MT33 - ■ ■ A1**	
	E.149-LES225YMF4P							
	353	1 210	4.19	10 600	1.2	464	**2KJ3007 - ■ MT33 - ■ ■ J1**	
	395	1 080	3.74	11 000	1.4	464	**2KJ3007 - ■ MT33 - ■ ■ H1**	
	444	965	3.33	11 200	1.5	464	**2KJ3007 - ■ MT33 - ■ ■ G1**	
	499	860	2.96	11 400	1.7	464	**2KJ3007 - ■ MT33 - ■ ■ F1**	
	545	785	2.71	11 300	1.9	464	**2KJ3007 - ■ MT33 - ■ ■ E1**	
	618	695	2.39	11 100	2.1	464	**2KJ3007 - ■ MT33 - ■ ■ D1**	
	754	570	1.96	10 800	2.6	464	**2KJ3007 - ■ MT33 - ■ ■ C1**	
	859	500	1.72	10 500	2.9	464	**2KJ3007 - ■ MT33 - ■ ■ B1**	
	1 103	390	1.34	10 000	3.3	464	**2KJ3007 - ■ MT33 - ■ ■ A1**	
	E.129-LES225YMF4P							
	449	955	3.29	6 110	0.82	424	**2KJ3006 - ■ MT33 - ■ ■ H1**	
	508	845	2.91	6 660	0.91	424	**2KJ3006 - ■ MT33 - ■ ■ G1**	
	830	515	1.78	7 770	1.5	424	**2KJ3006 - ■ MT33 - ■ ■ C1**	

Article No. supplement		
Shaft design	**1 or 9**	➞ page 10/43
Frequency and voltage	**2 or 9**	➞ page 11/2
Gearbox mounting type	**A, B, F or H**	➞ page 10/37

© Siemens AG 2017

3

Selection and ordering data (continued)

P_{rated} kW	n_2 rpm	T_2 Nm	i -	F_{R2} N	f_B -	m kg	Article No. (Article No. supplement ➞ below)	Order code No. of poles
45	**E.129-LES225YMF4P**							
	1 012	425	1.46	7 830	1.8	424	**2KJ3006 - ■ MT33 - ■ ■ B1**	
	1 192	360	1.24	7 830	2.1	424	**2KJ3006 - ■ MT33 - ■ ■ A1**	
55	**D.189-LES250MD4P**							
	26	20 000	56.08	107 000	0.95	1 083	**2KJ3214 - ■ NM33 - ■ ■ D1**	
	33	15 900	44.63	107 000	1.2	1 083	**2KJ3214 - ■ NM33 - ■ ■ C1**	
	40	13 100	36.67	107 000	1.5	1 083	**2KJ3214 - ■ NM33 - ■ ■ B1**	
	Z.189-LES250MD4P							
	54	9 810	27.46	102 300	1.9	1 001	**2KJ3114 - ■ NM33 - ■ ■ J1**	
	60	8 760	24.53	99 600	2.2	1 001	**2KJ3114 - ■ NM33 - ■ ■ H1**	
	66	8 010	22.44	97 400	2.4	1 001	**2KJ3114 - ■ NM33 - ■ ■ G1**	
	74	7 120	19.95	94 600	2.7	1 001	**2KJ3114 - ■ NM33 - ■ ■ F1**	
	87	6 040	16.93	90 700	3.1	1 001	**2KJ3114 - ■ NM33 - ■ ■ E1**	
	D.169-LES250MD4P							
	33	16 100	45.06	69 300	0.87	870	**2KJ3213 - ■ NM33 - ■ ■ D1**	
	35	14 800	41.43	69 800	0.95	870	**2KJ3213 - ■ NM33 - ■ ■ C1**	
	40	12 900	36.33	70 500	1.1	870	**2KJ3213 - ■ NM33 - ■ ■ B1**	
	52	10 100	28.41	69 200	1.4	870	**2KJ3213 - ■ NM33 - ■ ■ A1**	
	Z.169-LES250MD4P							
	63	8 370	23.45	66 700	1.7	826	**2KJ3113 - ■ NM33 - ■ ■ L1**	
	70	7 460	20.90	65 200	1.9	826	**2KJ3113 - ■ NM33 - ■ ■ K1**	
	78	6 760	18.93	63 900	2.1	826	**2KJ3113 - ■ NM33 - ■ ■ J1**	
	86	6 080	17.03	62 500	2.3	826	**2KJ3113 - ■ NM33 - ■ ■ H1**	
	104	5 050	14.15	60 000	2.8	826	**2KJ3113 - ■ NM33 - ■ ■ G1**	
	117	4 490	12.58	58 400	3.1	826	**2KJ3113 - ■ NM33 - ■ ■ F1**	
	147	3 580	10.03	55 300	3.9	826	**2KJ3113 - ■ NM33 - ■ ■ E1**	
	199	2 630	7.37	51 200	3.0	826	**2KJ3113 - ■ NM33 - ■ ■ C1**	
	250	2 100	5.88	48 300	3.8	826	**2KJ3113 - ■ NM33 - ■ ■ B1**	
	314	1 670	4.68	45 400	4.7	826	**2KJ3113 - ■ NM33 - ■ ■ A1**	
	D.149-LES250MD4P							
	52	10 000	28.13	35 900	0.8	693	**2KJ3212 - ■ NM33 - ■ ■ A1**	
	Z.149-LES250MD4P							
	76	6 900	19.33	34 800	1.2	686	**2KJ3112 - ■ NM33 - ■ ■ L1**	
	86	6 120	17.15	34 300	1.3	686	**2KJ3112 - ■ NM33 - ■ ■ K1**	
	93	5 620	15.74	33 900	1.4	686	**2KJ3112 - ■ NM33 - ■ ■ J1**	
	106	4 950	13.87	33 300	1.6	686	**2KJ3112 - ■ NM33 - ■ ■ H1**	
	129	4 060	11.38	32 200	2.0	686	**2KJ3112 - ■ NM33 - ■ ■ G1**	
	147	3 560	9.98	31 400	2.2	686	**2KJ3112 - ■ NM33 - ■ ■ F1**	
	188	2 780	7.80	29 900	2.9	686	**2KJ3112 - ■ NM33 - ■ ■ E1**	
	202	2 590	7.27	29 600	1.9	686	**2KJ3112 - ■ NM33 - ■ ■ D1**	
	247	2 130	5.96	28 300	2.3	686	**2KJ3112 - ■ NM33 - ■ ■ C1**	
	281	1 860	5.23	27 500	2.6	686	**2KJ3112 - ■ NM33 - ■ ■ B1**	
	359	1 460	4.09	25 900	3.3	686	**2KJ3112 - ■ NM33 - ■ ■ A1**	
	Z.129-LES250MD4P							
	90	5 860	16.42	10 400	0.85	601	**2KJ3111 - ■ NM33 - ■ ■ K1**	
	102	5 150	14.43	14 300	0.96	601	**2KJ3111 - ■ NM33 - ■ ■ J1**	
	112	4 670	13.07	16 800	1.0	601	**2KJ3111 - ■ NM33 - ■ ■ H1**	
	129	4 060	11.38	17 200	1.2	601	**2KJ3111 - ■ NM33 - ■ ■ G1**	
	158	3 330	9.33	17 000	1.4	601	**2KJ3111 - ■ NM33 - ■ ■ F1**	
	172	3 040	8.53	16 200	1.2	601	**2KJ3111 - ■ NM33 - ■ ■ E1**	

Article No. supplement		
Shaft design	**1 or 9**	➞ page 10/43
Frequency and voltage	**2 or 9**	➞ page 11/2
Gearbox mounting type	**A, B, F or H**	➞ page 10/37

© Siemens AG 2017

Selection and ordering data (continued)

P_{rated}	n_2	T_2	i	F_{R2}	f_B	m	Article No.	Order code
kW	rpm	Nm	-	N	-	kg	(Article No. supplement ➞ below)	No. of poles
55	**Z.129-LES250MD4P**							
	196	2 680	7.50	16 000	1.4	601	**2KJ3111 - ■ NM33 - ■ ■ D1**	
	216	2 420	6.79	15 900	1.5	601	**2KJ3111 - ■ NM33 - ■ ■ C1**	
	249	2 110	5.91	15 700	1.7	601	**2KJ3111 - ■ NM33 - ■ ■ B1**	
	303	1 730	4.85	15 300	1.9	601	**2KJ3111 - ■ NM33 - ■ ■ A1**	
	E.129-LES250MD4P							
	441	1 190	3.33	8 910	1.2	566	**2KJ3007 - ■ NM33 - ■ ■ G1**	
	497	1 050	2.96	9 390	1.4	566	**2KJ3007 - ■ NM33 - ■ ■ F1**	
	542	965	2.71	9 610	1.5	566	**2KJ3007 - ■ NM33 - ■ ■ E1**	
	615	850	2.39	9 870	1.7	566	**2KJ3007 - ■ NM33 - ■ ■ D1**	
	750	700	1.96	9 960	2.1	566	**2KJ3007 - ■ NM33 - ■ ■ C1**	
	855	615	1.72	10 000	2.4	566	**2KJ3007 - ■ NM33 - ■ ■ B1**	
	1 097	475	1.34	9 640	2.7	566	**2KJ3007 - ■ NM33 - ■ ■ A1**	
	1 185	440	1.24	6 430	1.7	525	**2KJ3006 - ■ NM33 - ■ ■ A1**	

Article No. supplement		
Shaft design	**1 or 9**	➞ page 10/43
Frequency and voltage	**2 or 9**	➞ page 11/2
Gearbox mounting type	**A, B, F or H**	➞ page 10/37

© Siemens AG 2017

Transmission ratios and torques

Selection and ordering data

i	n_2	T_{2N}	F_{R2}	φ [1]	J_G	R_{ex}	Motor frame size											Article No.
-	rpm	Nm	N	'	10^{-4} kgm²	-	63	71	80	90	100	112	132	160	180	200	225	250	
D.19																			
184.86	7.8	100	1 650	13.1	0.02	50468/273	✓	✓											**2KJ3201 - ■■■■■ - ■■ Q1**
163.69	8.9	100	1 650	13.2	0.03	74481/455	✓	✓											**2KJ3201 - ■■■■■ - ■■ P1**
142.23	10	100	1 650	13.2	0.04	64713/455	✓	✓											**2KJ3201 - ■■■■■ - ■■ N1**
129.30	11	100	1 650	13.2	0.04	11766/91	✓	✓											**2KJ3201 - ■■■■■ - ■■ M1**
110.02	13	100	1 650	13.2	0.06	50061/455	✓	✓											**2KJ3201 - ■■■■■ - ■■ L1**
100.02	14	100	1 650	13.2	0.07	9102/91	✓	✓											**2KJ3201 - ■■■■■ - ■■ K1**
87.21	17	100	1 650	13.3	0.08	1221/14	✓	✓											**2KJ3201 - ■■■■■ - ■■ J1**
78.07	19	100	1 650	13.3	0.11	7104/91	✓	✓											**2KJ3201 - ■■■■■ - ■■ H1**
69.32	21	100	1 650	13.3	0.13	12617/182	✓	✓											**2KJ3201 - ■■■■■ - ■■ G1**
63.99	23	100	1 650	13.3	0.16	75702/1183	✓	✓											**2KJ3201 - ■■■■■ - ■■ F1**
55.59	26	100	1 650	13.4	0.17	35409/637	✓	✓											**2KJ3201 - ■■■■■ - ■■ E1**
48.30	30	100	1 650	13.3	0.18	21978/455	✓	✓											**2KJ3201 - ■■■■■ - ■■ D1**
43.61	33	100	1 650	13.3	0.22	1221/28	✓	✓											**2KJ3201 - ■■■■■ - ■■ C1**
41.04	35	100	1 650	13.3	0.26	4884/119	✓	✓											**2KJ3201 - ■■■■■ - ■■ B1**
35.78	41	100	1 650	13.4	0.29	3256/91	✓	✓											**2KJ3201 - ■■■■■ - ■■ A1**
Z.19																			
34.97	41	100	1 650	12.6	0.02	1364/39	✓	✓											**2KJ3101 - ■■■■■ - ■■ W1**
30.97	47	100	1 650	13.2	0.03	2013/65	✓	✓	✓										**2KJ3101 - ■■■■■ - ■■ V1**
26.91	54	100	1 650	13.3	0.04	1749/65	✓	✓	✓										**2KJ3101 - ■■■■■ - ■■ U1**
24.46	59	100	1 650	13.3	0.05	318/13	✓	✓	✓										**2KJ3101 - ■■■■■ - ■■ T1**
20.82	70	100	1 650	13.5	0.06	1353/65	✓	✓	✓										**2KJ3101 - ■■■■■ - ■■ S1**
18.92	77	100	1 790	13.5	0.08	246/13	✓	✓	✓										**2KJ3101 - ■■■■■ - ■■ R1**
16.50	88	99	1 900	13.7	0.09	33/2	✓	✓	✓										**2KJ3101 - ■■■■■ - ■■ Q1**
14.77	98	95	1 870	13.8	0.12	192/13	✓	✓	✓										**2KJ3101 - ■■■■■ - ■■ P1**
13.12	111	91	1 830	13.9	0.15	341/26	✓	✓	✓										**2KJ3101 - ■■■■■ - ■■ N1**
12.11	120	88	1 810	13.9	0.18	2046/169	✓	✓	✓										**2KJ3101 - ■■■■■ - ■■ M1**
10.52	138	82	1 760	14.3	0.20	957/91	✓	✓	✓										**2KJ3101 - ■■■■■ - ■■ L1**
9.14	159	78	1 710	13.9	0.21	594/65	✓	✓	✓										**2KJ3101 - ■■■■■ - ■■ K1**
8.25	176	74	1 670	14.1	0.27	33/4	✓	✓	✓										**2KJ3101 - ■■■■■ - ■■ J1**
7.76	187	73	1 650	14.1	0.32	132/17	✓	✓	✓										**2KJ3101 - ■■■■■ - ■■ H1**
6.77	214	68	1 600	14.5	0.36	88/13	✓	✓	✓										**2KJ3101 - ■■■■■ - ■■ G1**
6.25	232	56	1 460	20.3	0.19	1705/273	✓	✓	✓										**2KJ3101 - ■■■■■ - ■■ F1**
5.43	267	53	1 420	21.0	0.22	1595/294	✓	✓	✓										**2KJ3101 - ■■■■■ - ■■ E1**
4.71	308	49	1 380	20.3	0.22	33/7	✓	✓	✓										**2KJ3101 - ■■■■■ - ■■ D1**
4.26	340	47	1 350	20.7	0.29	715/168	✓	✓	✓										**2KJ3101 - ■■■■■ - ■■ C1**
4.01	362	46	1 330	20.7	0.32	1430/357	✓	✓	✓										**2KJ3101 - ■■■■■ - ■■ B1**
3.49	415	43	1 290	21.5	0.39	220/63			✓										**2KJ3101 - ■■■■■ - ■■ A1**

[1] Only in conjunction with reduced-backlash version

© Siemens AG 2017

Selection and ordering data (continued)

i	n_2	T_{2N}	F_{R2}	φ [1]	J_G	R_{ex}	Motor frame size												Article No.
-	rpm	Nm	N	‘	10^{-4} kgm²	-	63	71	80	90	100	112	132	160	180	200	225	250	
D.29																			
217.89	6.7	140	3 710	10.7	0.02	7626/35	✓	✓											2KJ3202 - ■■■■■ - ■■ Q1
192.93	7.5	140	3 710	10.8	0.03	67527/350	✓	✓	✓	✓									2KJ3202 - ■■■■■ - ■■ P1
167.63	8.7	140	3 710	10.8	0.04	58671/350	✓	✓	✓	✓									2KJ3202 - ■■■■■ - ■■ N1
152.39	9.5	140	3 710	10.8	0.05	58671/385	✓	✓	✓	✓									2KJ3202 - ■■■■■ - ■■ M1
129.68	11	140	3 710	10.9	0.06	45387/350	✓	✓	✓	✓									2KJ3202 - ■■■■■ - ■■ L1
117.89	12	140	3 710	10.9	0.08	45387/385	✓	✓	✓	✓									2KJ3202 - ■■■■■ - ■■ K1
102.79	14	140	3 710	10.9	0.09	14391/140	✓	✓	✓	✓	✓								2KJ3202 - ■■■■■ - ■■ J1
92.01	16	140	3 710	10.9	0.12	35424/385	✓	✓	✓	✓	✓								2KJ3202 - ■■■■■ - ■■ H1
81.71	18	140	3 710	10.9	0.14	11439/140	✓	✓	✓	✓	✓								2KJ3202 - ■■■■■ - ■■ G1
75.42	19	140	3 710	10.9	0.17	34317/455	✓	✓	✓	✓	✓								2KJ3202 - ■■■■■ - ■■ F1
65.52	22	140	3 710	11.0	0.19	32103/490	✓	✓	✓	✓	✓								2KJ3202 - ■■■■■ - ■■ E1
56.93	25	140	3 710	10.9	0.19	9963/175	✓	✓	✓	✓	✓								2KJ3202 - ■■■■■ - ■■ D1
51.40	28	140	3 710	11.0	0.25	14391/280	✓	✓	✓	✓	✓								2KJ3202 - ■■■■■ - ■■ C1
48.37	30	140	3 710	11.0	0.29	28782/595	✓	✓	✓	✓	✓								2KJ3202 - ■■■■■ - ■■ B1
42.17	34	140	3 710	11.0	0.33	1476/35	✓	✓	✓	✓	✓								2KJ3202 - ■■■■■ - ■■ A1
Z.29																			
41.40	35	140	3 710	10.8	0.04	207/5	✓	✓											2KJ3102 - ■■■■■ - ■■ A2
36.72	39	140	3 670	10.8	0.05	918/25	✓	✓	✓	✓									2KJ3102 - ■■■■■ - ■■ X1
31.86	46	140	3 330	10.9	0.06	1593/50	✓	✓	✓	✓									2KJ3102 - ■■■■■ - ■■ W1
28.96	50	140	3 110	10.9	0.07	1593/55	✓	✓	✓	✓									2KJ3102 - ■■■■■ - ■■ V1
24.84	58	140	2 770	11.0	0.09	621/25	✓	✓	✓	✓									2KJ3102 - ■■■■■ - ■■ U1
22.58	64	140	2 570	11.0	0.11	1242/55	✓	✓	✓	✓									2KJ3102 - ■■■■■ - ■■ T1
19.80	73	140	2 300	11.2	0.13	99/5	✓	✓	✓	✓	✓								2KJ3102 - ■■■■■ - ■■ S1
17.67	82	140	2 070	11.3	0.15	972/55	✓	✓	✓	✓	✓								2KJ3102 - ■■■■■ - ■■ R1
15.75	92	140	1 850	11.4	0.18	63/4	✓	✓	✓	✓	✓								2KJ3102 - ■■■■■ - ■■ Q1
14.54	100	120	2 240	11.4	0.23	189/13	✓	✓	✓	✓	✓								2KJ3102 - ■■■■■ - ■■ P1
12.73	114	140	1 470	11.6	0.26	891/70	✓	✓	✓	✓	✓								2KJ3102 - ■■■■■ - ■■ N1
11.16	130	140	1 250	11.9	0.27	279/25	✓	✓	✓	✓	✓								2KJ3102 - ■■■■■ - ■■ M1
10.12	143	140	1 090	12.1	0.34	81/8	✓	✓	✓	✓	✓								2KJ3102 - ■■■■■ - ■■ L1
9.53	152	140	1 000	12.1	0.40	162/17	✓	✓	✓	✓	✓								2KJ3102 - ■■■■■ - ■■ K1
8.40	173	138	855	11.7	0.45	42/5	✓	✓	✓	✓	✓								2KJ3102 - ■■■■■ - ■■ J1
7.29	199	130	860	11.9	0.60	729/100	✓	✓	✓	✓	✓								2KJ3102 - ■■■■■ - ■■ H1
6.92	210	75	1 900	17.4	0.29	90/13	✓	✓	✓	✓	✓								2KJ3102 - ■■■■■ - ■■ G1
6.06	239	100	945	17.9	0.34	297/49	✓	✓	✓	✓	✓								2KJ3102 - ■■■■■ - ■■ F1
5.31	273	91	1 050	18.6	0.37	186/35	✓	✓	✓	✓	✓								2KJ3102 - ■■■■■ - ■■ E1
4.82	301	86	1 080	18.9	0.46	135/28	✓	✓	✓	✓	✓								2KJ3102 - ■■■■■ - ■■ D1
4.54	319	84	1 070	18.9	0.54	540/119	✓	✓	✓	✓	✓								2KJ3102 - ■■■■■ - ■■ C1
4.00	362	76	1 160	18.2	0.63	4/1	✓	✓	✓	✓	✓								2KJ3102 - ■■■■■ - ■■ B1
3.47	418	70	1 240	18.5	0.84	243/70	✓	✓	✓	✓	✓								2KJ3102 - ■■■■■ - ■■ A1

[1] Only in conjunction with reduced-backlash version

© Siemens AG 2017

3

Selection and ordering data (continued)

i	n_2	T_{2N}	F_{R2}	φ [1]	J_G	R_{ex}	Motor frame size												Article No.
-	rpm	Nm	N	‘	10^{-4} kgm²	-	63	71	80	90	100	112	132	160	180	200	225	250	
D.39																			
235.29	6.2	200	4 370	8.1	0.03	179998/765	✓	✓											**2KJ3203 - ■■■■■ - ■■ R1**
208.69	6.9	200	4 370	8.2	0.05	15652/75	✓	✓	✓	✓									**2KJ3203 - ■■■■■ - ■■ Q1**
181.07	8	200	4 370	8.2	0.05	230867/1275	✓	✓	✓	✓									**2KJ3203 - ■■■■■ - ■■ P1**
164.61	8.8	200	4 370	8.2	0.07	461734/2805	✓	✓	✓	✓									**2KJ3203 - ■■■■■ - ■■ N1**
141.17	10	200	4 370	8.2	0.08	179998/1275	✓	✓	✓	✓									**2KJ3203 - ■■■■■ - ■■ M1**
128.34	11	200	4 370	8.2	0.10	359996/2805	✓	✓	✓	✓									**2KJ3203 - ■■■■■ - ■■ L1**
112.53	13	200	4 370	8.2	0.12	86086/765	✓	✓	✓	✓	✓	✓							**2KJ3203 - ■■■■■ - ■■ K1**
100.44	14	200	4 370	8.3	0.15	93912/935	✓	✓	✓	✓	✓	✓							**2KJ3203 - ■■■■■ - ■■ J1**
89.51	16	200	4 370	8.3	0.17	27391/306	✓	✓	✓	✓	✓	✓							**2KJ3203 - ■■■■■ - ■■ H1**
82.63	18	200	4 370	8.3	0.21	4214/51	✓	✓	✓	✓	✓	✓							**2KJ3203 - ■■■■■ - ■■ G1**
72.34	20	200	4 370	8.3	0.25	6149/85	✓	✓	✓	✓	✓	✓							**2KJ3203 - ■■■■■ - ■■ F1**
63.43	23	200	4 370	8.4	0.23	242606/3825	✓	✓	✓	✓	✓	✓							**2KJ3203 - ■■■■■ - ■■ E1**
57.54	25	200	4 370	8.4	0.33	3913/68	✓	✓	✓	✓	✓	✓							**2KJ3203 - ■■■■■ - ■■ D1**
54.16	27	200	4 370	8.4	0.39	15652/289	✓	✓	✓	✓	✓	✓							**2KJ3203 - ■■■■■ - ■■ C1**
47.74	30	200	4 350	8.3	0.43	109564/2295	✓	✓	✓	✓	✓	✓							**2KJ3203 - ■■■■■ - ■■ B1**
41.43	35	200	3 920	8.4	0.58	35217/850	✓	✓	✓	✓	✓	✓							**2KJ3203 - ■■■■■ - ■■ A1**
Z.39																			
55.95	26	200	4 370	7.7	0.06	7553/135	✓	✓											**2KJ3103 - ■■■■■ - ■■ A2**
49.75	29	200	4 370	7.7	0.07	3731/75	✓	✓	✓	✓									**2KJ3103 - ■■■■■ - ■■ X1**
43.68	33	200	4 070	7.8	0.08	1092/25	✓	✓	✓	✓									**2KJ3103 - ■■■■■ - ■■ W1**
39.71	37	200	3 790	7.8	0.10	2184/55	✓	✓	✓	✓									**2KJ3103 - ■■■■■ - ■■ V1**
33.97	43	200	3 340	7.9	0.12	2548/75	✓	✓	✓	✓									**2KJ3103 - ■■■■■ - ■■ U1**
30.88	47	200	3 080	7.9	0.14	5096/165	✓	✓	✓	✓									**2KJ3103 - ■■■■■ - ■■ T1**
27.30	53	200	2 760	8.0	0.17	273/10	✓	✓	✓	✓	✓	✓							**2KJ3103 - ■■■■■ - ■■ S1**
24.82	58	200	2 520	8.0	0.22	273/11	✓	✓	✓	✓	✓	✓							**2KJ3103 - ■■■■■ - ■■ R1**
21.74	67	200	2 190	8.1	0.25	3913/180	✓	✓	✓	✓	✓	✓							**2KJ3103 - ■■■■■ - ■■ Q1**
20.07	72	200	2 000	8.1	0.31	301/15	✓	✓	✓	✓	✓	✓							**2KJ3103 - ■■■■■ - ■■ P1**
17.77	82	200	1 720	8.3	0.36	533/30	✓	✓	✓	✓	✓	✓							**2KJ3103 - ■■■■■ - ■■ N1**
14.79	98	193	1 500	8.4	0.47	1183/80	✓	✓	✓	✓	✓	✓							**2KJ3103 - ■■■■■ - ■■ M1**
13.92	104	189	1 470	8.4	0.55	1183/85	✓	✓	✓	✓	✓	✓							**2KJ3103 - ■■■■■ - ■■ L1**
12.47	116	180	1 470	8.6	0.60	3367/270	✓	✓	✓	✓	✓	✓							**2KJ3103 - ■■■■■ - ■■ K1**
10.62	137	169	1 440	8.8	0.78	637/60	✓	✓	✓	✓	✓	✓							**2KJ3103 - ■■■■■ - ■■ J1**
9.10	159	158	1 430	9.0	1.02	91/10			✓	✓	✓	✓							**2KJ3103 - ■■■■■ - ■■ H1**
7.84	185	148	1 420	9.3	1.30	2821/360			✓	✓	✓	✓							**2KJ3103 - ■■■■■ - ■■ G1**
6.46	224	146	225	13.4	0.57	2379/368	✓	✓	✓	✓	✓	✓							**2KJ3103 - ■■■■■ - ■■ F1**
6.08	238	147	100	13.4	0.66	2379/391	✓	✓	✓	✓	✓	✓							**2KJ3103 - ■■■■■ - ■■ E1**
5.45	266	140	150	13.8	0.74	2257/414	✓	✓	✓	✓	✓	✓							**2KJ3103 - ■■■■■ - ■■ D1**
4.64	312	130	490	14.3	0.97	427/92	✓	✓	✓	✓	✓	✓							**2KJ3103 - ■■■■■ - ■■ C1**
3.98	364	121	820	14.8	1.28	183/46			✓	✓	✓	✓							**2KJ3103 - ■■■■■ - ■■ B1**
3.43	423	112	1 070	15.4	1.65	1891/552			✓	✓	✓	✓							**2KJ3103 - ■■■■■ - ■■ A1**

[1] Only in conjunction with reduced-backlash version

© Siemens AG 2017

Selection and ordering data (continued)

i	n_2	T_{2N}	F_{R2}	φ [1]	J_G	R_{ex}	Motor frame size												Article No.
-	rpm	Nm	N	‘	10^{-4} kgm²	-	63	71	80	90	100	112	132	160	180	200	225	250	
D.49																			
280.89	5.2	320	5 780	7.3	0.06	60673/216	✓	✓											2KJ3204 - ■■■■■ - ■■ S1
249.76	5.8	320	5 780	7.3	0.07	29971/120	✓	✓	✓	✓									2KJ3204 - ■■■■■ - ■■ R1
219.30	6.6	320	5 780	7.4	0.08	2193/10	✓	✓	✓	✓									2KJ3204 - ■■■■■ - ■■ Q1
199.36	7.3	320	5 780	7.4	0.10	2193/11	✓	✓	✓	✓									2KJ3204 - ■■■■■ - ■■ P1
170.57	8.5	320	5 780	7.4	0.12	5117/30	✓	✓	✓	✓									2KJ3204 - ■■■■■ - ■■ N1
155.06	9.4	320	5 780	7.4	0.14	5117/33	✓	✓	✓	✓									2KJ3204 - ■■■■■ - ■■ M1
137.06	11	320	5 780	7.4	0.17	2193/16	✓	✓	✓	✓	✓	✓							2KJ3204 - ■■■■■ - ■■ L1
124.60	12	320	5 780	7.4	0.22	10965/88	✓	✓	✓	✓	✓	✓							2KJ3204 - ■■■■■ - ■■ K1
109.14	13	320	5 780	7.4	0.25	31433/288	✓	✓	✓	✓	✓	✓							2KJ3204 - ■■■■■ - ■■ J1
100.75	14	320	5 780	7.4	0.31	31433/312	✓	✓	✓	✓	✓	✓							2KJ3204 - ■■■■■ - ■■ H1
89.20	16	320	5 780	7.4	0.37	29971/336	✓	✓	✓	✓	✓	✓	✓						2KJ3204 - ■■■■■ - ■■ G1
74.24	20	320	5 780	7.5	0.50	9503/128	✓	✓	✓	✓	✓	✓	✓						2KJ3204 - ■■■■■ - ■■ F1
69.88	21	320	5 780	7.5	0.58	559/8	✓	✓	✓	✓	✓	✓	✓						2KJ3204 - ■■■■■ - ■■ E1
62.61	23	320	5 780	7.5	0.65	27047/432	✓	✓	✓	✓	✓	✓	✓						2KJ3204 - ■■■■■ - ■■ D1
53.30	27	320	5 780	7.5	0.85	5117/96	✓	✓	✓	✓	✓	✓	✓						2KJ3204 - ■■■■■ - ■■ C1
45.69	32	320	5 780	7.6	1.12	731/16			✓	✓	✓	✓	✓						2KJ3204 - ■■■■■ - ■■ B1
39.34	37	320	5 540	7.6	1.43	22661/576			✓	✓	✓	✓	✓						2KJ3204 - ■■■■■ - ■■ A1
Z.49																			
52.14	28	320	5 900	7.0	0.17	4171/80	✓	✓	✓	✓									2KJ3104 - ■■■■■ - ■■ B2
47.40	31	320	5 780	7.0	0.21	4171/88	✓	✓	✓	✓									2KJ3104 - ■■■■■ - ■■ A2
40.31	36	320	5 650	7.1	0.25	645/16	✓	✓	✓	✓									2KJ3104 - ■■■■■ - ■■ X1
36.65	40	320	5 220	7.1	0.31	3225/88	✓	✓	✓	✓									2KJ3104 - ■■■■■ - ■■ W1
32.70	44	320	5 520	7.1	0.36	3139/96	✓	✓	✓	✓	✓	✓							2KJ3104 - ■■■■■ - ■■ V1
29.32	49	320	5 280	7.2	0.43	645/22	✓	✓	✓	✓	✓	✓							2KJ3104 - ■■■■■ - ■■ U1
26.43	55	320	5 060	7.2	0.50	2537/96	✓	✓	✓	✓	✓	✓							2KJ3104 - ■■■■■ - ■■ T1
24.39	59	320	4 890	7.2	0.59	2537/104	✓	✓	✓	✓	✓	✓							2KJ3104 - ■■■■■ - ■■ S1
22.27	65	320	4 710	7.2	0.71	1247/56	✓	✓	✓	✓	✓	✓	✓						2KJ3104 - ■■■■■ - ■■ R1
18.48	78	320	4 350	7.4	0.90	2365/128	✓	✓	✓	✓	✓	✓	✓						2KJ3104 - ■■■■■ - ■■ Q1
17.39	83	320	4 230	7.4	1.03	2365/136	✓	✓	✓	✓	✓	✓	✓						2KJ3104 - ■■■■■ - ■■ P1
16.42	88	320	4 130	7.4	1.17	2365/144	✓	✓	✓	✓	✓	✓	✓						2KJ3104 - ■■■■■ - ■■ N1
13.98	104	320	3 850	7.5	1.44	559/40	✓	✓	✓	✓	✓	✓	✓						2KJ3104 - ■■■■■ - ■■ M1
11.97	121	320	3 590	7.5	1.76	2107/176			✓	✓	✓	✓	✓						2KJ3104 - ■■■■■ - ■■ L1
10.53	138	320	3 390	7.5	2.10	2021/192			✓	✓	✓	✓	✓						2KJ3104 - ■■■■■ - ■■ K1
8.88	163	320	3 130	7.8	2.70	817/92			✓	✓	✓	✓	✓						2KJ3104 - ■■■■■ - ■■ J1
7.74	187	320	3 100	8.0	3.60	387/50			✓	✓	✓	✓	✓						2KJ3104 - ■■■■■ - ■■ H1
7.64	190	295	3 000	11.8	1.18	649/85	✓	✓	✓	✓	✓	✓	✓						2KJ3104 - ■■■■■ - ■■ G1
7.21	201	290	2 980	11.8	1.34	649/90	✓	✓	✓	✓	✓	✓	✓						2KJ3104 - ■■■■■ - ■■ F1
6.14	236	265	2 940	12.2	1.67	767/125	✓	✓	✓	✓	✓	✓	✓						2KJ3104 - ■■■■■ - ■■ E1
5.26	276	245	2 880	12.2	2.10	2891/550			✓	✓	✓	✓	✓						2KJ3104 - ■■■■■ - ■■ D1
4.62	314	225	2 820	12.2	2.60	2773/600			✓	✓	✓	✓	✓						2KJ3104 - ■■■■■ - ■■ C1
3.90	372	205	2 740	12.2	3.30	2242/575			✓	✓	✓	✓	✓						2KJ3104 - ■■■■■ - ■■ B1
3.40	426	191	2 210	12.2	4.40	2124/625			✓	✓	✓	✓	✓						2KJ3104 - ■■■■■ - ■■ A1

[1] Only in conjunction with reduced-backlash version

© Siemens AG 2017

3

Selection and ordering data (continued)

i	n_2	T_{2N}	F_{R2}	φ[1]	J_G	R_{ex}	Motor frame size												Article No.
-	rpm	Nm	N	‘	10^{-4} kgm²	-	63	71	80	90	100	112	132	160	180	200	225	250	
D.59																			
307.02	4.7	450	7 660	6.8	0.06	66317/216	✓	✓											2KJ3205 - ■■■■■ - ■■ S1
272.99	5.3	450	7 660	6.8	0.07	32759/120	✓	✓	✓	✓									2KJ3205 - ■■■■■ - ■■ R1
239.70	6	450	7 660	6.8	0.08	2397/10	✓	✓	✓	✓									2KJ3205 - ■■■■■ - ■■ Q1
217.91	6.7	450	7 660	6.8	0.10	2397/11	✓	✓	✓	✓									2KJ3205 - ■■■■■ - ■■ P1
186.43	7.8	450	7 660	6.9	0.12	5593/30	✓	✓	✓	✓									2KJ3205 - ■■■■■ - ■■ N1
169.48	8.6	450	7 660	6.9	0.14	5593/33	✓	✓	✓	✓									2KJ3205 - ■■■■■ - ■■ M1
149.81	9.7	450	7 660	6.9	0.17	2397/16	✓	✓	✓	✓	✓	✓							2KJ3205 - ■■■■■ - ■■ L1
136.19	11	450	7 660	6.9	0.22	11985/88	✓	✓	✓	✓	✓	✓							2KJ3205 - ■■■■■ - ■■ K1
119.30	12	450	7 660	6.9	0.26	34357/288	✓	✓	✓	✓	✓	✓							2KJ3205 - ■■■■■ - ■■ J1
110.12	13	450	7 660	6.9	0.31	34357/312	✓	✓	✓	✓	✓	✓							2KJ3205 - ■■■■■ - ■■ H1
97.50	15	450	7 660	6.9	0.37	32759/336	✓	✓	✓	✓	✓	✓	✓						2KJ3205 - ■■■■■ - ■■ G1
81.15	18	450	7 660	7.0	0.50	10387/128	✓	✓	✓	✓	✓	✓	✓						2KJ3205 - ■■■■■ - ■■ F1
76.38	19	450	7 660	7.0	0.59	611/8	✓	✓	✓	✓	✓	✓	✓						2KJ3205 - ■■■■■ - ■■ E1
68.43	21	450	7 660	7.0	0.65	29563/432	✓	✓	✓	✓	✓	✓	✓						2KJ3205 - ■■■■■ - ■■ D1
58.26	25	450	7 660	7.0	0.85	5593/96	✓	✓	✓	✓	✓	✓	✓						2KJ3205 - ■■■■■ - ■■ C1
49.94	29	450	7 660	7.1	1.12	799/16			✓	✓	✓	✓	✓						2KJ3205 - ■■■■■ - ■■ B1
43.00	34	450	7 230	7.1	1.44	24769/576			✓	✓	✓	✓	✓						2KJ3205 - ■■■■■ - ■■ A1
Z.59																			
56.99	25	450	7 660	6.5	0.18	4559/80	✓	✓	✓	✓									2KJ3105 - ■■■■■ - ■■ A2
51.81	28	450	7 660	6.5	0.21	4559/88	✓	✓	✓	✓									2KJ3105 - ■■■■■ - ■■ X1
44.06	33	450	7 310	6.6	0.26	705/16	✓	✓	✓	✓									2KJ3105 - ■■■■■ - ■■ W1
40.06	36	450	7 020	6.6	0.32	3525/88	✓	✓	✓	✓									2KJ3105 - ■■■■■ - ■■ V1
35.74	41	450	6 690	6.6	0.37	3431/96	✓	✓	✓	✓	✓	✓							2KJ3105 - ■■■■■ - ■■ U1
32.05	45	450	6 180	6.7	0.44	705/22	✓	✓	✓	✓	✓	✓							2KJ3105 - ■■■■■ - ■■ T1
28.89	50	450	5 690	6.7	0.52	2773/96	✓	✓	✓	✓	✓	✓							2KJ3105 - ■■■■■ - ■■ S1
26.66	54	450	5 330	6.7	0.62	2773/104	✓	✓	✓	✓	✓	✓							2KJ3105 - ■■■■■ - ■■ R1
24.34	60	450	4 930	6.7	0.73	1363/56	✓	✓	✓	✓	✓	✓	✓						2KJ3105 - ■■■■■ - ■■ Q1
20.20	72	450	5 230	6.9	0.94	2585/128	✓	✓	✓	✓	✓	✓	✓						2KJ3105 - ■■■■■ - ■■ P1
19.01	76	450	5 090	6.9	1.08	2585/136	✓	✓	✓	✓	✓	✓	✓						2KJ3105 - ■■■■■ - ■■ N1
17.95	81	450	4 960	6.9	1.23	2585/144	✓	✓	✓	✓	✓	✓	✓						2KJ3105 - ■■■■■ - ■■ M1
15.27	95	450	4 600	7.0	1.51	611/40	✓	✓	✓	✓	✓	✓	✓						2KJ3105 - ■■■■■ - ■■ L1
13.09	111	450	4 280	7.2	1.85	2303/176			✓	✓	✓	✓	✓						2KJ3105 - ■■■■■ - ■■ K1
11.51	126	450	4 030	7.3	2.30	2209/192			✓	✓	✓	✓	✓						2KJ3105 - ■■■■■ - ■■ J1
9.71	149	450	3 710	7.5	2.90	893/92			✓	✓	✓	✓	✓						2KJ3105 - ■■■■■ - ■■ H1
8.46	171	450	3 600	8.0	3.90	423/50			✓	✓	✓	✓	✓						2KJ3105 - ■■■■■ - ■■ G1
8.07	180	410	3 500	10.6	1.45	121/15	✓	✓	✓	✓	✓	✓	✓						2KJ3105 - ■■■■■ - ■■ F1
6.86	211	410	3 480	11.0	1.81	858/125	✓	✓	✓	✓	✓	✓	✓						2KJ3105 - ■■■■■ - ■■ E1
5.88	247	410	3 440	11.3	2.30	147/25			✓	✓	✓	✓	✓						2KJ3105 - ■■■■■ - ■■ D1
5.17	280	410	2 210	11.6	2.80	517/100			✓	✓	✓	✓	✓						2KJ3105 - ■■■■■ - ■■ C1
4.36	333	405	2 650	12.0	3.60	2508/575			✓	✓	✓	✓	✓						2KJ3105 - ■■■■■ - ■■ B1
3.80	382	405	2 920	13.4	4.90	2376/625			✓	✓	✓	✓	✓						2KJ3105 - ■■■■■ - ■■ A1

[1] Only in conjunction with reduced-backlash version

© Siemens AG 2017

Selection and ordering data (continued)

i	n_2	T_{2N}	F_{R2}	φ[1]	J_G	R_{ex}	Motor frame size												Article No.
-	rpm	Nm	N	‘	10^{-4} kgm²	-	63	71	80	90	100	112	132	160	180	200	225	250	
D.69																			
328.49	4.4	600	11 000	6.5	0.06	62084/189	✓	✓											2KJ3206 - ■■■■■ - ■■ S1
292.08	5.0	600	11 000	6.5	0.07	30668/105	✓	✓	✓	✓									2KJ3206 - ■■■■■ - ■■ R1
256.46	5.7	600	11 000	6.6	0.08	8976/35	✓	✓	✓	✓									2KJ3206 - ■■■■■ - ■■ Q1
233.14	6.2	600	11 000	6.6	0.10	1632/7	✓	✓	✓	✓									2KJ3206 - ■■■■■ - ■■ P1
199.47	7.3	600	11 000	6.6	0.12	2992/15	✓	✓	✓	✓									2KJ3206 - ■■■■■ - ■■ N1
181.33	8	600	11 000	6.6	0.14	544/3	✓	✓	✓	✓									2KJ3206 - ■■■■■ - ■■ M1
160.29	9	600	11 000	6.6	0.17	1122/7	✓	✓	✓	✓	✓	✓							2KJ3206 - ■■■■■ - ■■ L1
145.71	10	600	11 000	6.6	0.22	1020/7	✓	✓	✓	✓	✓	✓							2KJ3206 - ■■■■■ - ■■ K1
127.63	11	600	11 000	6.6	0.26	8041/63	✓	✓	✓	✓	✓	✓							2KJ3206 - ■■■■■ - ■■ J1
117.82	12	600	11 000	6.6	0.31	32164/273	✓	✓	✓	✓	✓	✓							2KJ3206 - ■■■■■ - ■■ H1
104.31	14	600	11 000	6.6	0.37	15334/147	✓	✓	✓	✓	✓	✓	✓						2KJ3206 - ■■■■■ - ■■ G1
86.82	17	600	11 000	6.7	0.50	2431/28	✓	✓	✓	✓	✓	✓	✓						2KJ3206 - ■■■■■ - ■■ F1
81.71	18	600	11 000	6.7	0.59	572/7	✓	✓	✓	✓	✓	✓	✓						2KJ3206 - ■■■■■ - ■■ E1
73.22	20	600	11 000	6.7	0.66	13838/189	✓	✓	✓	✓	✓	✓	✓						2KJ3206 - ■■■■■ - ■■ D1
62.33	23	600	11 000	6.7	0.86	187/3	✓	✓	✓	✓	✓	✓	✓						2KJ3206 - ■■■■■ - ■■ C1
53.43	27	600	11 000	6.7	1.14	374/7			✓	✓	✓	✓	✓						2KJ3206 - ■■■■■ - ■■ B1
46.01	32	600	11 000	6.7	1.46	5797/126			✓	✓	✓	✓	✓						2KJ3206 - ■■■■■ - ■■ A1
Z.69																			
60.97	24	600	11 000	6.2	0.18	2134/35	✓	✓	✓	✓									2KJ3106 - ■■■■■ - ■■ A2
55.43	26	600	11 000	6.2	0.22	388/7	✓	✓	✓	✓									2KJ3106 - ■■■■■ - ■■ X1
47.14	31	600	11 000	6.3	0.28	330/7	✓	✓	✓	✓									2KJ3106 - ■■■■■ - ■■ W1
42.86	34	600	11 000	6.3	0.34	300/7	✓	✓	✓	✓									2KJ3106 - ■■■■■ - ■■ V1
38.24	38	600	11 000	6.4	0.39	803/21	✓	✓	✓	✓	✓	✓							2KJ3106 - ■■■■■ - ■■ U1
34.29	42	600	11 000	6.4	0.47	240/7	✓	✓	✓	✓	✓	✓							2KJ3106 - ■■■■■ - ■■ T1
30.90	47	600	10 400	6.4	0.56	649/21	✓	✓	✓	✓	✓	✓							2KJ3106 - ■■■■■ - ■■ S1
28.53	51	600	9 860	6.4	0.66	2596/91	✓	✓	✓	✓	✓	✓							2KJ3106 - ■■■■■ - ■■ R1
26.04	56	600	9 200	6.5	0.79	1276/49	✓	✓	✓	✓	✓	✓	✓						2KJ3106 - ■■■■■ - ■■ Q1
21.61	67	600	7 910	6.6	1.01	605/28	✓	✓	✓	✓	✓	✓	✓						2KJ3106 - ■■■■■ - ■■ P1
20.34	71	600	7 510	6.6	1.16	2420/119	✓	✓	✓	✓	✓	✓	✓						2KJ3106 - ■■■■■ - ■■ N1
19.21	75	600	7 140	6.6	1.32	1210/63	✓	✓	✓	✓	✓	✓	✓						2KJ3106 - ■■■■■ - ■■ M1
16.34	89	600	9 850	6.7	1.64	572/35	✓	✓	✓	✓	✓	✓	✓						2KJ3106 - ■■■■■ - ■■ L1
14.00	104	600	9 260	6.8	2.00	14/1			✓	✓	✓	✓	✓						2KJ3106 - ■■■■■ - ■■ K1
12.31	118	600	8 790	7.0	2.50	517/42			✓	✓	✓	✓	✓						2KJ3106 - ■■■■■ - ■■ J1
10.39	140	600	8 200	7.1	3.20	1672/161			✓	✓	✓	✓	✓						2KJ3106 - ■■■■■ - ■■ H1
9.05	160	591	7 920	7.7	4.30	1584/175			✓	✓	✓	✓	✓						2KJ3106 - ■■■■■ - ■■ G1
8.50	171	446	8 000	10.0	1.67	1760/207	✓	✓	✓	✓	✓	✓	✓						2KJ3106 - ■■■■■ - ■■ F1
7.23	201	447	7 540	10.3	2.10	832/115	✓	✓	✓	✓	✓	✓	✓						2KJ3106 - ■■■■■ - ■■ E1
6.20	234	445	7 290	10.6	2.70	1568/253			✓	✓	✓	✓	✓						2KJ3106 - ■■■■■ - ■■ D1
5.45	266	429	7 090	10.9	3.40	376/69			✓	✓	✓	✓	✓						2KJ3106 - ■■■■■ - ■■ C1
4.60	315	446	6 810	11.3	4.40	2432/529			✓	✓	✓	✓	✓						2KJ3106 - ■■■■■ - ■■ B1
4.01	362	445	5 440	11.6	5.80	2304/575			✓	✓	✓	✓	✓						2KJ3106 - ■■■■■ - ■■ A1

[1] Only in conjunction with reduced-backlash version

© Siemens AG 2017

3

Selection and ordering data (continued)

i	n_2	T_{2N}	F_{R2}	φ [1]	J_G	R_{ex}	Motor frame size												Article No.
-	rpm	Nm	N	‘	10^{-4} kgm²	-	63	71	80	90	100	112	132	160	180	200	225	250	
D.79																			
330.23	4.4	840	13 400	6.1	0.17	369861/1120		✓	✓	✓									2KJ3207 - ■■■■■ - ■■ S1
300.21	4.8	840	13 400	6.1	0.20	369861/1232		✓	✓	✓									2KJ3207 - ■■■■■ - ■■ R1
255.33	5.7	840	13 400	6.2	0.25	57195/224		✓	✓	✓									2KJ3207 - ■■■■■ - ■■ Q1
232.12	6.2	840	13 400	6.2	0.30	285975/1232		✓	✓	✓									2KJ3207 - ■■■■■ - ■■ P1
207.10	7	840	13 400	6.2	0.35	92783/448		✓	✓	✓	✓	✓							2KJ3207 - ■■■■■ - ■■ N1
185.70	7.8	840	13 400	6.2	0.42	57195/308		✓	✓	✓	✓	✓							2KJ3207 - ■■■■■ - ■■ M1
167.39	8.7	840	13 400	6.2	0.49	74989/448		✓	✓	✓	✓	✓							2KJ3207 - ■■■■■ - ■■ L1
154.51	9.4	840	13 400	6.2	0.58	224967/1456		✓	✓	✓	✓	✓							2KJ3207 - ■■■■■ - ■■ K1
141.04	10	840	13 400	6.2	0.69	110577/784		✓	✓	✓	✓	✓	✓	✓					2KJ3207 - ■■■■■ - ■■ J1
117.03	12	840	13 400	6.2	0.87	209715/1792		✓	✓	✓	✓	✓	✓	✓					2KJ3207 - ■■■■■ - ■■ H1
110.14	13	840	13 400	6.2	1.00	209715/1904		✓	✓	✓	✓	✓	✓	✓					2KJ3207 - ■■■■■ - ■■ G1
104.03	14	840	13 400	6.2	1.14	69905/672		✓	✓	✓	✓	✓	✓	✓					2KJ3207 - ■■■■■ - ■■ F1
88.52	16	840	13 400	6.2	1.39	49569/560		✓	✓	✓	✓	✓	✓	✓					2KJ3207 - ■■■■■ - ■■ E1
75.83	19	840	13 400	6.2	1.69	26691/352			✓	✓	✓	✓	✓	✓					2KJ3207 - ■■■■■ - ■■ D1
66.67	22	840	13 400	6.2	2.10	59737/896			✓	✓	✓	✓	✓	✓					2KJ3207 - ■■■■■ - ■■ C1
56.25	26	840	13 400	6.2	2.60	72447/1288			✓	✓	✓	✓	✓	✓					2KJ3207 - ■■■■■ - ■■ B1
49.02	30	840	12 600	6.2	3.50	34317/700			✓	✓	✓	✓	✓	✓					2KJ3207 - ■■■■■ - ■■ A1
Z.79																			
54.47	27	840	13 400	6.1	0.43	3813/70		✓	✓	✓									2KJ3107 - ■■■■■ - ■■ A2
49.52	29	840	12 600	6.1	0.53	3813/77		✓	✓	✓									2KJ3107 - ■■■■■ - ■■ X1
44.42	33	840	11 700	6.2	0.73	533/12		✓	✓	✓	✓	✓							2KJ3107 - ■■■■■ - ■■ W1
39.94	36	840	10 900	6.2	0.83	3075/77		✓	✓	✓	✓	✓							2KJ3107 - ■■■■■ - ■■ V1
36.12	40	840	10 100	6.2	0.92	1517/42		✓	✓	✓	✓	✓							2KJ3107 - ■■■■■ - ■■ U1
33.34	43	840	13 400	6.2	1.08	3034/91		✓	✓	✓	✓	✓							2KJ3107 - ■■■■■ - ■■ T1
30.54	47	840	13 400	6.3	1.41	2993/98		✓	✓	✓	✓	✓	✓	✓					2KJ3107 - ■■■■■ - ■■ S1
25.62	57	840	13 300	6.0	1.52	205/8		✓	✓	✓	✓	✓	✓	✓					2KJ3107 - ■■■■■ - ■■ R1
24.12	60	840	13 000	6.0	1.73	410/17		✓	✓	✓	✓	✓	✓	✓					2KJ3107 - ■■■■■ - ■■ Q1
22.13	66	840	12 600	6.1	1.90	1394/63		✓	✓	✓	✓	✓	✓	✓					2KJ3107 - ■■■■■ - ■■ P1
19.33	75	840	11 900	6.1	2.7	1353/70		✓	✓	✓	✓	✓	✓	✓					2KJ3107 - ■■■■■ - ■■ N1
17.31	84	840	11 400	6.2	3.3	2665/154			✓	✓	✓	✓	✓	✓					2KJ3107 - ■■■■■ - ■■ M1
15.13	96	840	10 800	6.3	3.9	1271/84			✓	✓	✓	✓	✓	✓					2KJ3107 - ■■■■■ - ■■ L1
12.99	112	840	10 100	6.3	4.3	2091/161			✓	✓	✓	✓	✓	✓					2KJ3107 - ■■■■■ - ■■ K1
11.48	126	840	9 640	6.7	5.5	287/25			✓	✓	✓	✓	✓	✓					2KJ3107 - ■■■■■ - ■■ J1
9.76	149	815	9 080	6.9	7.0	205/21					✓	✓	✓	✓					2KJ3107 - ■■■■■ - ■■ H1
8.37	173	790	8 580	7.1	9.3	410/49					✓	✓	✓	✓					2KJ3107 - ■■■■■ - ■■ G1
8.19	177	715	8 460	9.2	4.0	3965/484			✓	✓	✓	✓	✓	✓					2KJ3107 - ■■■■■ - ■■ F1
7.16	203	730	8 030	9.4	4.8	1891/264			✓	✓	✓	✓	✓	✓					2KJ3107 - ■■■■■ - ■■ E1
6.15	236	715	7 850	9.6	5.4	3111/506			✓	✓	✓	✓	✓	✓					2KJ3107 - ■■■■■ - ■■ D1
5.43	267	685	7 690	10.5	6.9	2989/550			✓	✓	✓	✓	✓	✓					2KJ3107 - ■■■■■ - ■■ C1
4.62	314	775	7 460	10.9	9.1	305/66					✓	✓	✓	✓					2KJ3107 - ■■■■■ - ■■ B1
3.96	366	775	3 730	11.3	12.0	305/77					✓	✓	✓	✓					2KJ3107 - ■■■■■ - ■■ A1

[1] Only in conjunction with reduced-backlash version

© Siemens AG 2017

Selection and ordering data (continued)

i	n_2	T_{2N}	F_{R2}	φ [1]	J_G	R_{ex}	Motor frame size												Article No.
-	rpm	Nm	N	‘	10^{-4} kgm²	-	63	71	80	90	100	112	132	160	180	200	225	250	
D.89																			
311.60	4.7	1 680	18 500	5.7	0.41	132432/425			✓	✓									**2KJ3208 - ■■■■■ - ■■ S1**
283.28	5.1	1 680	18 500	5.7	0.50	264864/935			✓	✓									**2KJ3208 - ■■■■■ - ■■ R1**
254.09	5.7	1 680	18 500	5.7	0.70	64792/255			✓	✓	✓	✓							**2KJ3208 - ■■■■■ - ■■ Q1**
228.45	6.3	1 680	18 500	5.7	0.79	42720/187			✓	✓	✓	✓							**2KJ3208 - ■■■■■ - ■■ P1**
206.62	7	1 680	18 500	5.7	0.87	52688/255			✓	✓	✓	✓							**2KJ3208 - ■■■■■ - ■■ N1**
190.73	7.6	1 680	18 500	5.7	1.03	210752/1105			✓	✓	✓	✓							**2KJ3208 - ■■■■■ - ■■ M1**
174.71	8.3	1 680	18 500	5.7	1.35	103952/595			✓	✓	✓	✓	✓	✓					**2KJ3208 - ■■■■■ - ■■ L1**
146.59	9.9	1 680	18 500	5.7	1.43	2492/17			✓	✓	✓	✓	✓	✓					**2KJ3208 - ■■■■■ - ■■ K1**
137.97	11	1 680	18 500	5.7	1.63	39872/289			✓	✓	✓	✓	✓	✓					**2KJ3208 - ■■■■■ - ■■ J1**
126.58	11	1 680	18 500	5.7	1.78	5696/45			✓	✓	✓	✓	✓	✓					**2KJ3208 - ■■■■■ - ■■ H1**
110.57	13	1 680	18 500	5.7	2.5	46992/425			✓	✓	✓	✓	✓	✓					**2KJ3208 - ■■■■■ - ■■ G1**
98.99	15	1 680	18 500	5.7	3.1	18512/187			✓	✓	✓	✓	✓	✓					**2KJ3208 - ■■■■■ - ■■ F1**
86.56	17	1 680	18 500	5.7	3.7	22072/255			✓	✓	✓	✓	✓	✓					**2KJ3208 - ■■■■■ - ■■ E1**
74.30	20	1 680	18 500	5.7	4.0	8544/115			✓	✓	✓	✓	✓	✓					**2KJ3208 - ■■■■■ - ■■ D1**
65.67	22	1 680	18 500	5.7	5.0	139552/2125			✓	✓	✓	✓	✓	✓					**2KJ3208 - ■■■■■ - ■■ C1**
55.84	26	1 680	18 500	5.7	6.4	2848/51					✓	✓	✓	✓					**2KJ3208 - ■■■■■ - ■■ B1**
47.87	30	1 680	18 500	5.7	8.5	5696/119					✓	✓	✓	✓					**2KJ3208 - ■■■■■ - ■■ A1**
Z.89																			
57.36	25	1 680	18 500	5.4	1.34	2581/45			✓	✓	✓	✓							**2KJ3108 - ■■■■■ - ■■ A2**
51.78	28	1 680	18 500	5.4	1.46	2848/55			✓	✓	✓	✓							**2KJ3108 - ■■■■■ - ■■ X1**
46.97	31	1 680	18 500	5.4	1.71	1691/36			✓	✓	✓	✓							**2KJ3108 - ■■■■■ - ■■ W1**
43.36	33	1 680	18 500	5.4	2.0	1691/39			✓	✓	✓	✓							**2KJ3108 - ■■■■■ - ■■ V1**
39.41	37	1 680	18 500	5.5	2.3	2759/70			✓	✓	✓	✓	✓	✓					**2KJ3108 - ■■■■■ - ■■ U1**
33.38	43	1 680	18 500	5.5	2.8	267/8			✓	✓	✓	✓	✓	✓					**2KJ3108 - ■■■■■ - ■■ T1**
31.41	46	1 680	18 500	5.5	2.8	534/17			✓	✓	✓	✓	✓	✓					**2KJ3108 - ■■■■■ - ■■ S1**
29.01	50	1 680	18 500	5.6	4.3	3916/135			✓	✓	✓	✓	✓	✓					**2KJ3108 - ■■■■■ - ■■ R1**
25.81	56	1 680	18 500	5.6	5.3	2581/100			✓	✓	✓	✓	✓	✓					**2KJ3108 - ■■■■■ - ■■ Q1**
22.92	63	1 680	17 400	5.6	6.4	1513/66			✓	✓	✓	✓	✓	✓					**2KJ3108 - ■■■■■ - ■■ P1**
20.52	71	1 680	16 000	5.7	6.4	7387/360			✓	✓	✓	✓	✓	✓					**2KJ3108 - ■■■■■ - ■■ N1**
17.54	83	1 680	14 200	5.7	7.5	6052/345			✓	✓	✓	✓	✓	✓					**2KJ3108 - ■■■■■ - ■■ M1**
15.66	93	1 680	12 900	6.0	9.5	1958/125			✓	✓	✓	✓	✓	✓	✓				**2KJ3108 - ■■■■■ - ■■ L1**
13.84	105	1 680	11 500	6.1	11	623/45					✓	✓	✓	✓	✓				**2KJ3108 - ■■■■■ - ■■ K1**
12.15	119	1 630	10 700	5.9	15	3827/315					✓	✓	✓	✓	✓				**2KJ3108 - ■■■■■ - ■■ J1**
10.58	137	1 590	10 700	6.0	19	3649/345					✓	✓	✓	✓	✓				**2KJ3108 - ■■■■■ - ■■ H1**
9.04	160	1 560	11 900	6.1	24	2848/315					✓	✓	✓	✓	✓				**2KJ3108 - ■■■■■ - ■■ G1**
7.74	187	1 530	12 700	6.3	30	178/23					✓	✓	✓	✓	✓				**2KJ3108 - ■■■■■ - ■■ F1**
6.89	210	1 050	10 100	8.6	12	62/9					✓	✓	✓	✓	✓				**2KJ3108 - ■■■■■ - ■■ E1**
6.05	240	1 060	10 900	8.8	17	2666/441					✓	✓	✓	✓	✓				**2KJ3108 - ■■■■■ - ■■ D1**
5.26	276	1 060	11 600	9.0	21	2542/483					✓	✓	✓	✓	✓				**2KJ3108 - ■■■■■ - ■■ C1**
4.50	322	1 060	11 500	9.3	28	1984/441					✓	✓	✓	✓	✓				**2KJ3108 - ■■■■■ - ■■ B1**
3.85	377	1 060	11 100	9.7	35	620/161					✓	✓	✓	✓	✓				**2KJ3108 - ■■■■■ - ■■ A1**

[1] Only in conjunction with reduced-backlash version

© Siemens AG 2017

3

Selection and ordering data (continued)

i	n_2	T_{2N}	F_{R2}	φ[1]	J_G	R_{ex}	Motor frame size												Article No.
-	rpm	Nm	N	‘	10^{-4} kgm²	-	63	71	80	90	100	112	132	160	180	200	225	250	
D.109																			
348.88	4.2	3 100	20 200	5.5	1.27	263755/756				✓	✓	✓							2KJ3210 - ■■■■■ - ■■ T1
314.98	4.6	3 100	20 200	5.5	1.36	72760/231				✓	✓	✓							2KJ3210 - ■■■■■ - ■■ S1
285.72	5.1	3 100	20 200	5.5	1.60	864025/3024				✓	✓	✓							2KJ3210 - ■■■■■ - ■■ R1
263.74	5.5	3 100	20 200	5.5	1.88	864025/3276				✓	✓	✓							2KJ3210 - ■■■■■ - ■■ Q1
239.75	6	3 100	20 200	5.5	2.1	281945/1176				✓	✓	✓	✓	✓					2KJ3210 - ■■■■■ - ■■ P1
203.01	7.1	3 100	20 200	5.5	2.6	45475/224				✓	✓	✓	✓	✓					2KJ3210 - ■■■■■ - ■■ N1
191.07	7.6	3 100	20 200	5.5	2.6	2675/14				✓	✓	✓	✓	✓					2KJ3210 - ■■■■■ - ■■ M1
176.45	8.2	3 100	20 200	5.6	4.0	100045/567				✓	✓	✓	✓	✓					2KJ3210 - ■■■■■ - ■■ L1
157.00	9.2	3 100	20 200	5.6	5.0	52751/336				✓	✓	✓	✓	✓					2KJ3210 - ■■■■■ - ■■ K1
139.44	10	3 100	20 200	5.6	5.9	773075/5544				✓	✓	✓	✓	✓					2KJ3210 - ■■■■■ - ■■ J1
124.82	12	3 100	20 200	5.6	5.8	754885/6048				✓	✓	✓	✓	✓					2KJ3210 - ■■■■■ - ■■ H1
106.70	14	3 100	20 200	5.6	6.7	154615/1449				✓	✓	✓	✓	✓					2KJ3210 - ■■■■■ - ■■ G1
95.28	15	3 100	20 200	5.6	8.5	20009/210				✓	✓	✓	✓	✓					2KJ3210 - ■■■■■ - ■■ F1
84.21	17	3 100	20 200	5.6	9.6	9095/108					✓	✓	✓	✓					2KJ3210 - ■■■■■ - ■■ E1
73.90	20	3 100	20 200	5.6	13	391085/5292					✓	✓	✓	✓					2KJ3210 - ■■■■■ - ■■ D1
64.34	23	3 100	20 200	5.6	16	372895/5796					✓	✓	✓	✓					2KJ3210 - ■■■■■ - ■■ C1
55.00	26	3 090	20 200	5.6	20	72760/1323					✓	✓	✓	✓					2KJ3210 - ■■■■■ - ■■ B1
47.08	31	2 930	20 200	5.7	25	45475/966					✓	✓	✓	✓					2KJ3210 - ■■■■■ - ■■ A1
Z.109																			
51.17	28	3 100	20 200	5.4	4.7	5015/98				✓	✓	✓	✓	✓					2KJ3110 - ■■■■■ - ■■ X1
43.64	33	3 100	20 200	5.4	6.0	9775/224				✓	✓	✓	✓	✓					2KJ3110 - ■■■■■ - ■■ W1
41.07	35	3 100	20 200	5.4	6.8	575/14				✓	✓	✓	✓	✓					2KJ3110 - ■■■■■ - ■■ V1
38.12	38	3 100	20 200	5.4	7.4	9605/252				✓	✓	✓	✓	✓					2KJ3110 - ■■■■■ - ■■ U1
33.70	43	3 100	20 200	5.4	9.0	1887/56				✓	✓	✓	✓	✓					2KJ3110 - ■■■■■ - ■■ T1
30.08	48	3 100	20 000	5.5	11	9265/308				✓	✓	✓	✓	✓					2KJ3110 - ■■■■■ - ■■ S1
27.07	54	3 040	19 300	5.5	13	9095/336				✓	✓	✓	✓	✓					2KJ3110 - ■■■■■ - ■■ R1
23.49	62	2 920	18 400	5.5	15	7565/322				✓	✓	✓	✓	✓					2KJ3110 - ■■■■■ - ■■ Q1
21.13	69	2 830	17 900	5.7	18	1479/70				✓	✓	✓	✓	✓	✓				2KJ3110 - ■■■■■ - ■■ P1
18.47	79	2 720	17 100	5.8	21	6205/336					✓	✓	✓	✓	✓	✓			2KJ3110 - ■■■■■ - ■■ N1
16.48	88	2 630	16 600	5.8	25	1615/98					✓	✓	✓	✓	✓	✓	✓		2KJ3110 - ■■■■■ - ■■ M1
14.52	100	2 570	15 900	5.9	30	4675/322					✓	✓	✓	✓	✓	✓	✓		2KJ3110 - ■■■■■ - ■■ L1
12.72	114	2 510	15 100	6.0	37	1870/147					✓	✓	✓	✓	✓	✓	✓		2KJ3110 - ■■■■■ - ■■ K1
11.09	131	2 460	14 400	6.1	44	255/23					✓	✓	✓	✓	✓	✓	✓		2KJ3110 - ■■■■■ - ■■ J1
10.12	143	2 430	13 900	6.1	51	425/42					✓	✓	✓	✓	✓	✓	✓		2KJ3110 - ■■■■■ - ■■ H1
8.71	166	2 380	13 200	6.3	64	2805/322							✓	✓	✓	✓	✓		2KJ3110 - ■■■■■ - ■■ G1
8.41	172	2 290	12 800	8.6	29	589/70					✓	✓	✓	✓	✓	✓	✓		2KJ3110 - ■■■■■ - ■■ F1
7.41	196	2 280	12 300	8.7	34	341/46					✓	✓	✓	✓	✓	✓	✓		2KJ3110 - ■■■■■ - ■■ E1
6.50	223	2 280	12 300	8.8	42	682/105					✓	✓	✓	✓	✓	✓	✓		2KJ3110 - ■■■■■ - ■■ D1
5.66	256	2 290	12 200	9.0	51	651/115					✓	✓	✓	✓	✓	✓	✓		2KJ3110 - ■■■■■ - ■■ C1
5.17	280	2 280	12 200	9.1	60	31/6					✓	✓	✓	✓	✓	✓	✓		2KJ3110 - ■■■■■ - ■■ B1
4.45	326	2 150	12 000	9.4	75	1023/230							✓	✓	✓	✓	✓		2KJ3110 - ■■■■■ - ■■ A1

[1] Only in conjunction with reduced-backlash version

© Siemens AG 2017

Selection and ordering data (continued)

i	n_2	T_{2N}	F_{R2}	φ[1]	J_G	R_{ex}	Motor frame size												Article No.
-	rpm	Nm	N	‘	10^{-4} kgm²	-	63	71	80	90	100	112	132	160	180	200	225	250	
D.129																			
373.00	3.9	5 000	27 000	6.4	3.3	523481/1404				✓	✓	✓							2KJ3211 - ■■■■■ - ■■ S1
344.17	4.2	5 000	27 000	6.4	3.9	523481/1521				✓	✓	✓							2KJ3211 - ■■■■■ - ■■ R1
316.90	4.6	5 000	27 000	6.4	4.5	259541/819				✓	✓	✓	✓	✓					2KJ3211 - ■■■■■ - ■■ Q1
270.24	5.4	5 000	27 000	6.4	5.6	505885/1872				✓	✓	✓	✓	✓					2KJ3211 - ■■■■■ - ■■ P1
254.34	5.7	5 000	27 000	6.4	6.4	505885/1989				✓	✓	✓	✓	✓					2KJ3211 - ■■■■■ - ■■ N1
236.03	6.1	5 000	27 000	6.4	6.9	497087/2106				✓	✓	✓	✓	✓					2KJ3211 - ■■■■■ - ■■ M1
208.67	6.9	5 000	27 000	6.4	8.4	162763/780				✓	✓	✓	✓	✓					2KJ3211 - ■■■■■ - ■■ L1
186.28	7.8	5 000	27 000	6.4	9.9	479491/2574				✓	✓	✓	✓	✓					2KJ3211 - ■■■■■ - ■■ K1
167.63	8.7	5 000	27 000	6.4	12	470693/2808				✓	✓	✓	✓	✓					2KJ3211 - ■■■■■ - ■■ J1
145.49	10	5 000	27 000	6.4	14	391511/2691				✓	✓	✓	✓	✓					2KJ3211 - ■■■■■ - ■■ H1
130.84	11	5 000	27 000	6.4	16	127571/975				✓	✓	✓	✓	✓					2KJ3211 - ■■■■■ - ■■ G1
114.36	13	5 000	27 000	6.5	19	321127/2808					✓	✓	✓	✓					2KJ3211 - ■■■■■ - ■■ F1
102.05	14	5 000	27 000	6.5	23	83581/819					✓	✓	✓	✓					2KJ3211 - ■■■■■ - ■■ E1
89.91	16	5 000	27 000	6.5	27	241945/2691					✓	✓	✓	✓					2KJ3211 - ■■■■■ - ■■ D1
78.78	18	5 000	27 000	6.5	31	193556/2457					✓	✓	✓	✓					2KJ3211 - ■■■■■ - ■■ C1
68.66	21	5 000	27 000	6.5	37	61586/897					✓	✓	✓	✓					2KJ3211 - ■■■■■ - ■■ B1
62.66	23	5 000	27 000	6.5	44	21995/351					✓	✓	✓	✓					2KJ3211 - ■■■■■ - ■■ A1
Z.129																			
62.48	23	5 000	27 000	6.2	7.5	11371/182				✓	✓	✓	✓	✓					2KJ3111 - ■■■■■ - ■■ X1
53.47	27	5 000	27 000	6.2	9.5	5561/104				✓	✓	✓	✓	✓					2KJ3111 - ■■■■■ - ■■ W1
50.33	29	5 000	27 000	6.2	11	11122/221				✓	✓	✓	✓	✓					2KJ3111 - ■■■■■ - ■■ V1
47.18	31	5 000	27 000	6.2	12	11039/234				✓	✓	✓	✓	✓					2KJ3111 - ■■■■■ - ■■ U1
41.82	35	5 000	27 000	6.3	14	10873/260				✓	✓	✓	✓	✓					2KJ3111 - ■■■■■ - ■■ T1
37.15	39	5 000	26 000	6.3	17	5312/143				✓	✓	✓	✓	✓					2KJ3111 - ■■■■■ - ■■ S1
33.52	43	5 000	24 900	6.3	20	1743/52				✓	✓	✓	✓	✓					2KJ3111 - ■■■■■ - ■■ R1
29.70	49	5 000	23 700	6.3	25	8881/299				✓	✓	✓	✓	✓					2KJ3111 - ■■■■■ - ■■ Q1
26.30	55	5 000	22 600	6.4	28	8549/325				✓	✓	✓	✓	✓	✓				2KJ3111 - ■■■■■ - ■■ P1
23.41	62	5 000	21 500	6.4	33	913/39					✓	✓	✓	✓	✓	✓			2KJ3111 - ■■■■■ - ■■ N1
20.98	69	5 000	20 500	6.5	40	1909/91					✓	✓	✓	✓	✓	✓	✓		2KJ3111 - ■■■■■ - ■■ M1
18.60	78	5 000	19 500	6.5	47	5561/299					✓	✓	✓	✓	✓	✓	✓		2KJ3111 - ■■■■■ - ■■ L1
16.42	88	5 000	18 100	6.6	57	1494/91					✓	✓	✓	✓	✓	✓	✓	✓	2KJ3111 - ■■■■■ - ■■ K1
14.43	100	4 940	16 200	6.6	69	332/23					✓	✓	✓	✓	✓	✓	✓	✓	2KJ3111 - ■■■■■ - ■■ J1
13.07	111	4 850	16 600	6.6	78	3569/273					✓	✓	✓	✓	✓	✓	✓	✓	2KJ3111 - ■■■■■ - ■■ H1
11.38	127	4 760	17 200	6.6	95	3403/299							✓	✓	✓	✓	✓	✓	2KJ3111 - ■■■■■ - ■■ G1
9.33	155	4 660	17 000	6.7	126	1577/169							✓	✓	✓	✓	✓	✓	2KJ3111 - ■■■■■ - ■■ F1
8.53	170	3 640	16 200	7.4	66	162/19					✓	✓	✓	✓	✓	✓	✓	✓	2KJ3111 - ■■■■■ - ■■ E1
7.50	193	3 630	16 100	8.3	80	3276/437					✓	✓	✓	✓	✓	✓	✓	✓	2KJ3111 - ■■■■■ - ■■ D1
6.79	214	3 630	15 900	8.3	91	129/19					✓	✓	✓	✓	✓	✓	✓	✓	2KJ3111 - ■■■■■ - ■■ C1
5.91	245	3 610	15 700	8.5	112	2583/437							✓	✓	✓	✓	✓	✓	2KJ3111 - ■■■■■ - ■■ B1
4.85	299	3 270	15 300	8.8	151	63/13							✓	✓	✓	✓	✓	✓	2KJ3111 - ■■■■■ - ■■ A1

[1] Only in conjunction with reduced-backlash version

© Siemens AG 2017

3

Selection and ordering data (continued)

i	n_2	T_{2N}	F_{R2}	φ [1]	J_G	R_{ex}	Motor frame size												Article No.
-	rpm	Nm	N	'	10^{-4} kgm²	-	63	71	80	90	100	112	132	160	180	200	225	250	
D.149																			
328.38	4.4	8 000	51 200	5.5	7.1	321813/980					✓	✓	✓	✓					2KJ3212 - ■■■■■ - ■■ W1
281.04	5.2	8 000	51 200	5.5	9	157383/560					✓	✓	✓	✓					2KJ3212 - ■■■■■ - ■■ V1
264.51	5.5	8 000	51 200	5.5	10	157383/595					✓	✓	✓	✓					2KJ3212 - ■■■■■ - ■■ U1
247.95	5.8	8 000	51 200	5.5	11	4959/20					✓	✓	✓	✓					2KJ3212 - ■■■■■ - ■■ T1
219.80	6.6	8 000	51 200	5.5	14	307719/1400					✓	✓	✓	✓					2KJ3212 - ■■■■■ - ■■ S1
195.24	7.4	8 000	51 200	5.5	16	75168/385					✓	✓	✓	✓					2KJ3212 - ■■■■■ - ■■ R1
176.18	8.2	8 000	51 200	5.5	19	7047/40					✓	✓	✓	✓					2KJ3212 - ■■■■■ - ■■ Q1
156.11	9.3	8 000	51 200	5.5	23	251343/1610					✓	✓	✓	✓					2KJ3212 - ■■■■■ - ■■ P1
138.26	10	8 000	51 200	5.5	26	241947/1750					✓	✓	✓	✓	✓				2KJ3212 - ■■■■■ - ■■ N1
123.04	12	8 000	51 200	5.5	31	8613/70					✓	✓	✓	✓	✓	✓			2KJ3212 - ■■■■■ - ■■ M1
110.26	13	8 000	51 200	5.5	37	54027/490					✓	✓	✓	✓	✓	✓	✓		2KJ3212 - ■■■■■ - ■■ L1
97.75	15	8 000	51 200	5.5	43	157383/1610					✓	✓	✓	✓	✓	✓	✓		2KJ3212 - ■■■■■ - ■■ K1
86.29	17	8 000	51 200	5.5	52	21141/245					✓	✓	✓	✓	✓	✓	✓	✓	2KJ3212 - ■■■■■ - ■■ J1
75.87	19	8 000	51 200	5.5	63	61074/805					✓	✓	✓	✓	✓	✓	✓	✓	2KJ3212 - ■■■■■ - ■■ H1
68.71	21	8 000	51 200	5.6	70	33669/490					✓	✓	✓	✓	✓	✓	✓	✓	2KJ3212 - ■■■■■ - ■■ G1
59.82	24	8 000	51 200	5.6	85	96309/1610							✓	✓	✓	✓	✓	✓	2KJ3212 - ■■■■■ - ■■ F1
49.05	30	8 000	47 700	5.6	110	44631/910							✓	✓	✓	✓	✓	✓	2KJ3212 - ■■■■■ - ■■ E1
43.51	33	8 000	45 700	5.8	72	55042/1265					✓	✓	✓	✓	✓	✓	✓	✓	2KJ3212 - ■■■■■ - ■■ D1
39.41	37	8 000	44 000	5.8	82	91031/2310					✓	✓	✓	✓	✓	✓	✓	✓	2KJ3212 - ■■■■■ - ■■ C1
34.31	42	8 000	41 800	5.8	101	86797/2530							✓	✓	✓	✓	✓	✓	2KJ3212 - ■■■■■ - ■■ B1
28.13	52	8 000	38 700	5.9	133	40223/1430							✓	✓	✓	✓	✓	✓	2KJ3212 - ■■■■■ - ■■ A1
Z.149																			
56.64	26	8 000	50 300	5.2	19	4814/85					✓	✓	✓	✓					2KJ3112 - ■■■■■ - ■■ W1
52.84	27	7 710	49 500	5.2	21	2378/45					✓	✓	✓	✓					2KJ3112 - ■■■■■ - ■■ V1
46.98	31	7 570	47 600	5.2	25	2349/50					✓	✓	✓	✓					2KJ3112 - ■■■■■ - ■■ U1
42.18	34	7 660	45 600	5.2	30	464/11					✓	✓	✓	✓					2KJ3112 - ■■■■■ - ■■ T1
38.18	38	7 550	44 100	5.2	35	2291/60					✓	✓	✓	✓					2KJ3112 - ■■■■■ - ■■ S1
33.54	43	8 000	41 400	5.2	43	3857/115					✓	✓	✓	✓					2KJ3112 - ■■■■■ - ■■ R1
30.39	48	8 000	39 900	5.2	50	3799/125					✓	✓	✓	✓	✓				2KJ3112 - ■■■■■ - ■■ Q1
27.07	54	8 000	38 100	5.3	59	406/15					✓	✓	✓	✓	✓	✓			2KJ3112 - ■■■■■ - ■■ P1
24.30	60	8 000	36 600	5.3	70	2552/105					✓	✓	✓	✓	✓	✓	✓		2KJ3112 - ■■■■■ - ■■ N1
21.69	67	8 000	35 000	5.3	81	2494/115					✓	✓	✓	✓	✓	✓	✓		2KJ3112 - ■■■■■ - ■■ M1
19.33	75	8 000	33 400	5.4	96	58/3					✓	✓	✓	✓	✓	✓	✓	✓	2KJ3112 - ■■■■■ - ■■ L1
17.15	85	8 000	31 900	5.4	113	1972/115					✓	✓	✓	✓	✓	✓	✓	✓	2KJ3112 - ■■■■■ - ■■ K1
15.74	92	8 000	30 800	5.4	127	551/35					✓	✓	✓	✓	✓	✓	✓	✓	2KJ3112 - ■■■■■ - ■■ J1
13.87	105	8 000	29 200	5.5	150	319/23							✓	✓	✓	✓	✓	✓	2KJ3112 - ■■■■■ - ■■ H1
11.38	127	8 000	28 700	5.5	203	1479/130							✓	✓	✓	✓	✓	✓	2KJ3112 - ■■■■■ - ■■ G1
9.98	145	8 000	28 300	5.6	227	1247/125							✓	✓	✓	✓	✓	✓	2KJ3112 - ■■■■■ - ■■ F1
7.80	186	8 000	27 500	5.9	360	39/5							✓	✓	✓	✓	✓	✓	2KJ3112 - ■■■■■ - ■■ E1
7.27	199	4 880	27 500	7.5	173	836/115							✓	✓	✓	✓	✓	✓	2KJ3112 - ■■■■■ - ■■ D1
5.96	243	4 870	26 600	7.7	237	1938/325							✓	✓	✓	✓	✓	✓	2KJ3112 - ■■■■■ - ■■ C1
5.23	277	4 870	26 000	7.7	273	3268/625							✓	✓	✓	✓	✓	✓	2KJ3112 - ■■■■■ - ■■ B1
4.09	355	4 870	24 700	7.7	432	2964/725							✓	✓	✓	✓	✓	✓	2KJ3112 - ■■■■■ - ■■ A1

[1] Only in conjunction with reduced-backlash version

© Siemens AG 2017

Selection and ordering data (continued)

i	n_2	T_{2N}	F_{R2}	φ[1]	J_G	R_{ex}	Motor frame size											Article No.
-	rpm	Nm	N	‘	10^{-4} kgm²	-	63	71	80	90	100	112	132	160	180	200	225	250	
D.169																			
327.18	4.4	14 000	70 100	5.0	18	472768 / 1445						✓	✓	✓					2KJ3213 - ■■■■■ - ■■ V1
305.28	4.7	14 000	70 100	5.0	19	233536 / 765						✓	✓	✓					2KJ3213 - ■■■■■ - ■■ U1
271.40	5.3	14 000	70 100	5.0	23	115344 / 425						✓	✓	✓					2KJ3213 - ■■■■■ - ■■ T1
243.68	6.0	14 000	70 100	5.0	28	45568 / 187						✓	✓	✓					2KJ3213 - ■■■■■ - ■■ S1
220.58	6.6	14 000	70 100	5.0	33	56248 / 255						✓	✓	✓					2KJ3213 - ■■■■■ - ■■ R1
193.75	7.5	14 000	70 100	5.0	40	378784 / 1955						✓	✓	✓					2KJ3213 - ■■■■■ - ■■ Q1
175.57	8.3	14 000	70 100	5.0	46	373088 / 2125						✓	✓	✓	✓				2KJ3213 - ■■■■■ - ■■ P1
156.36	9.3	14 000	70 100	5.0	54	39872 / 255						✓	✓	✓	✓	✓			2KJ3213 - ■■■■■ - ■■ N1
140.41	10	14 000	70 100	5.0	64	250624 / 1785						✓	✓	✓	✓	✓	✓		2KJ3213 - ■■■■■ - ■■ M1
125.28	12	14 000	70 100	5.0	74	244928 / 1955						✓	✓	✓	✓	✓	✓		2KJ3213 - ■■■■■ - ■■ L1
111.69	13	14 000	70 100	5.0	85	5696 / 51						✓	✓	✓	✓	✓	✓	✓	2KJ3213 - ■■■■■ - ■■ K1
99.06	15	14 000	70 100	5.0	101	11392 / 115						✓	✓	✓	✓	✓	✓	✓	2KJ3213 - ■■■■■ - ■■ J1
90.94	16	14 000	70 100	5.0	112	54112 / 595						✓	✓	✓	✓	✓	✓	✓	2KJ3213 - ■■■■■ - ■■ H1
80.12	18	14 000	70 100	5.0	132	31328 / 391							✓	✓	✓	✓	✓	✓	2KJ3213 - ■■■■■ - ■■ G1
65.72	22	14 000	70 100	5.1	176	4272 / 65							✓	✓	✓	✓	✓	✓	2KJ3213 - ■■■■■ - ■■ F1
57.63	25	14 000	70 100	5.1	193	122464 / 2125							✓	✓	✓	✓	✓	✓	2KJ3213 - ■■■■■ - ■■ E1
45.06	32	14 000	70 100	5.1	301	111072 / 2465							✓	✓	✓	✓	✓	✓	2KJ3213 - ■■■■■ - ■■ D1
41.43	35	14 000	70 100	5.2	200	134657 / 3250							✓	✓	✓	✓	✓	✓	2KJ3213 - ■■■■■ - ■■ C1
36.33	40	14 000	70 500	5.2	225	340603 / 9375							✓	✓	✓	✓	✓	✓	2KJ3213 - ■■■■■ - ■■ B1
28.41	51	14 000	69 200	5.3	353	102973 / 3625							✓	✓	✓	✓	✓	✓	2KJ3213 - ■■■■■ - ■■ A1
Z.169																			
36.55	40	12 100	70 800	4.7	79	13706/375						✓	✓	✓	✓				2KJ3113 - ■■■■■ - ■■ Q1
32.88	44	14 000	68 200	4.7	94	11837/360						✓	✓	✓	✓	✓			2KJ3113 - ■■■■■ - ■■ P1
29.38	49	14 000	65 300	4.8	109	9256/315						✓	✓	✓	✓	✓	✓		2KJ3113 - ■■■■■ - ■■ N1
26.57	55	14 000	62 900	4.8	131	9167/345						✓	✓	✓	✓	✓	✓		2KJ3113 - ■■■■■ - ■■ M1
23.45	62	14 000	60 200	4.8	154	7387/315						✓	✓	✓	✓	✓	✓	✓	2KJ3113 - ■■■■■ - ■■ L1
20.90	69	14 000	59 400	4.8	183	2403/115						✓	✓	✓	✓	✓	✓	✓	2KJ3113 - ■■■■■ - ■■ K1
18.93	77	14 000	58 600	4.8	203	5963/315						✓	✓	✓	✓	✓	✓	✓	2KJ3113 - ■■■■■ - ■■ J1
17.03	85	14 000	57 800	4.8	245	1958/115							✓	✓	✓	✓	✓	✓	2KJ3113 - ■■■■■ - ■■ H1
14.15	102	14 000	56 100	4.8	308	2759/195							✓	✓	✓	✓	✓	✓	2KJ3113 - ■■■■■ - ■■ G1
12.58	115	13 900	54 900	4.8	377	4717/375							✓	✓	✓	✓	✓	✓	2KJ3113 - ■■■■■ - ■■ F1
10.03	145	13 900	52 600	5.1	521	4361/435							✓	✓	✓	✓	✓	✓	2KJ3113 - ■■■■■ - ■■ E1
7.98	182	13 800	50 100	5.3	689	1157/145									✓	✓	✓	✓	2KJ3113 - ■■■■■ - ■■ D1
7.37	197	7 960	49 100	7.0	409	848/115							✓	✓	✓	✓	✓	✓	2KJ3113 - ■■■■■ - ■■ C1
5.88	247	7 900	46 700	7.1	571	3920/667							✓	✓	✓	✓	✓	✓	2KJ3113 - ■■■■■ - ■■ B1
4.68	310	7 820	44 200	7.3	768	3120/667									✓	✓	✓	✓	2KJ3113 - ■■■■■ - ■■ A1

[1] Only in conjunction with reduced-backlash version

© Siemens AG 2017

3

Selection and ordering data (continued)

i	n_2	T_{2N}	F_{R2}	φ [1]	J_G	R_{ex}	Motor frame size												Article No.
-	rpm	Nm	N	‘	10^{-4} kgm²	-	63	71	80	90	100	112	132	160	180	200	225	250	
D.189																			
313.63	4.6	19 000	107 000	4.7	36	533169/1700						✓	✓	✓					2KJ3214 - ■■■■■ - ■■ T1
280.59	5.2	19 000	107 000	4.7	43	262353/935						✓	✓	✓					2KJ3214 - ■■■■■ - ■■ S1
253.06	5.7	19 000	107 000	4.7	49	172081/680						✓	✓	✓					2KJ3214 - ■■■■■ - ■■ R1
223.66	6.5	19 000	107 000	4.7	61	87451/391						✓	✓	✓					2KJ3214 - ■■■■■ - ■■ Q1
204.44	7.1	19 000	107 000	4.7	71	434434/2125						✓	✓	✓	✓				2KJ3214 - ■■■■■ - ■■ P1
183.92	7.9	19 000	107 000	4.7	84	375193/2040						✓	✓	✓	✓	✓			2KJ3214 - ■■■■■ - ■■ N1
164.36	8.8	19 000	107 000	4.7	98	41912/255						✓	✓	✓	✓	✓	✓		2KJ3214 - ■■■■■ - ■■ M1
148.63	9.8	19 000	107 000	4.7	116	290563/1955						✓	✓	✓	✓	✓	✓		2KJ3214 - ■■■■■ - ■■ L1
131.17	11	19 000	107 000	4.7	136	33449/255						✓	✓	✓	✓	✓	✓	✓	2KJ3214 - ■■■■■ - ■■ K1
116.88	12	19 000	107 000	4.7	160	228501/1955						✓	✓	✓	✓	✓	✓	✓	2KJ3214 - ■■■■■ - ■■ J1
105.89	14	19 000	107 000	4.7	175	27001/255						✓	✓	✓	✓	✓	✓	✓	2KJ3214 - ■■■■■ - ■■ H1
95.24	15	19 000	107 000	4.7	210	186186/1955							✓	✓	✓	✓	✓	✓	2KJ3214 - ■■■■■ - ■■ G1
79.14	18	19 000	107 000	4.7	257	6727/85							✓	✓	✓	✓	✓	✓	2KJ3214 - ■■■■■ - ■■ F1
70.36	21	19 000	107 000	4.7	314	149513/2125							✓	✓	✓	✓	✓	✓	2KJ3214 - ■■■■■ - ■■ E1
56.08	26	19 000	107 000	4.7	421	138229/2465							✓	✓	✓	✓	✓	✓	2KJ3214 - ■■■■■ - ■■ D1
44.63	32	19 000	107 000	4.8	531	110019/2465									✓	✓	✓	✓	2KJ3214 - ■■■■■ - ■■ C1
36.67	40	19 000	104 200	4.8	475	10633/290							✓	✓	✓	✓	✓	✓	2KJ3214 - ■■■■■ - ■■ B1
29.18	50	19 000	97 800	4.8	617	8463/290									✓	✓	✓	✓	2KJ3214 - ■■■■■ - ■■ A1
Z.189																			
34.25	42	19 000	101 700	4.5	140	3596/105						✓	✓	✓	✓	✓	✓		2KJ3114 - ■■■■■ - ■■ L1
30.73	47	19 000	97 900	4.5	166	3534/115						✓	✓	✓	✓	✓	✓		2KJ3114 - ■■■■■ - ■■ K1
27.46	53	19 000	94 100	4.6	199	961/35						✓	✓	✓	✓	✓	✓	✓	2KJ3114 - ■■■■■ - ■■ J1
24.53	59	19 000	90 400	4.6	236	2821/115						✓	✓	✓	✓	✓	✓	✓	2KJ3114 - ■■■■■ - ■■ H1
22.44	65	19 000	87 500	4.6	262	2356/105						✓	✓	✓	✓	✓	✓	✓	2KJ3114 - ■■■■■ - ■■ G1
19.95	73	19 000	83 900	4.6	314	2294/115							✓	✓	✓	✓	✓	✓	2KJ3114 - ■■■■■ - ■■ F1
16.93	86	19 000	79 000	4.6	400	2201/130							✓	✓	✓	✓	✓	✓	2KJ3114 - ■■■■■ - ■■ E1
14.63	99	19 000	74 900	4.7	481	1829/125							✓	✓	✓	✓	✓	✓	2KJ3114 - ■■■■■ - ■■ D1
11.97	121	19 000	72 500	4.8	666	1736/145							✓	✓	✓	✓	✓	✓	2KJ3114 - ■■■■■ - ■■ C1
9.83	148	18 800	70 100	4.8	875	1426/145									✓	✓	✓	✓	2KJ3114 - ■■■■■ - ■■ B1
7.65	190	16 000	66 800	4.8	1 283	1147/150												✓	2KJ3114 - ■■■■■ - ■■ A1

[1] Only in conjunction with reduced-backlash version

© Siemens AG 2017

Selection and ordering data

i	n_2	T_{2N}	F_{R2}	φ [1]	J_G	R_{ex}	Motor frame size												Article No.
-	rpm	Nm	N	‘	10^{-4} kgm²	-	63	71	80	90	100	112	132	160	180	200	225	250	
E.39																			
9.22	157	30	3 000	-	0.001	83/9	✓	✓											**2KJ3001 - ■■■■■ - ■■ S1**
8.20	177	34	3 000	-	0.001	41/5	✓	✓	✓	✓									**2KJ3001 - ■■■■■ - ■■ R1**
7.20	201	40	3 000	-	0.003	36/5	✓	✓	✓	✓									**2KJ3001 - ■■■■■ - ■■ Q1**
6.55	221	40	3 000	-	0.004	72/11	✓	✓	✓	✓									**2KJ3001 - ■■■■■ - ■■ P1**
5.60	259	40	3 000	-	0.007	28/5	✓	✓	✓	✓									**2KJ3001 - ■■■■■ - ■■ N1**
5.09	285	40	3 000	-	0.01	56/11	✓	✓	✓	✓									**2KJ3001 - ■■■■■ - ■■ M1**
4.50	322	48	3 000	-	0.02	9/2	✓	✓	✓	✓	✓	✓							**2KJ3001 - ■■■■■ - ■■ L1**
4.09	355	48	3 000	-	0.02	45/11	✓	✓	✓	✓	✓	✓							**2KJ3001 - ■■■■■ - ■■ K1**
3.58	405	58	2 550	-	0.03	43/12	✓	✓	✓	✓	✓	✓							**2KJ3001 - ■■■■■ - ■■ J1**
3.31	438	58	2 400	-	0.05	43/13	✓	✓	✓	✓	✓	✓							**2KJ3001 - ■■■■■ - ■■ H1**
2.93	495	65	1 620	-	0.07	41/14	✓	✓	✓	✓	✓	✓							**2KJ3001 - ■■■■■ - ■■ G1**
2.44	594	65	1 200	-	0.13	39/16	✓	✓	✓	✓	✓	✓							**2KJ3001 - ■■■■■ - ■■ F1**
2.29	633	66	1 330	-	0.16	39/17	✓	✓	✓	✓	✓	✓							**2KJ3001 - ■■■■■ - ■■ E1**
2.06	704	66	1 370	-	0.19	37/18	✓	✓	✓	✓	✓	✓							**2KJ3001 - ■■■■■ - ■■ D1**
1.75	829	66	1 490	-	0.29	7/4	✓	✓	✓	✓	✓	✓							**2KJ3001 - ■■■■■ - ■■ C1**
1.50	967	61	1 560	-	0.45	3/2			✓	✓	✓	✓							**2KJ3001 - ■■■■■ - ■■ B1**
1.29	1 124	54	1 600	-	0.64	31/24			✓	✓	✓	✓							**2KJ3001 - ■■■■■ - ■■ A1**
E.49																			
9.70	149	86	4 000	-	0.003	97/10	✓	✓	✓	✓									**2KJ3002 - ■■■■■ - ■■ S1**
8.82	164	108	4 000	-	0.004	97/11	✓	✓	✓	✓									**2KJ3002 - ■■■■■ - ■■ R1**
7.50	193	107	4 000	-	0.007	15/2	✓	✓	✓	✓									**2KJ3002 - ■■■■■ - ■■ Q1**
6.82	213	104	4 000	-	0.01	75/11	✓	✓	✓	✓									**2KJ3002 - ■■■■■ - ■■ P1**
6.08	238	104	4 000	-	0.02	73/12	✓	✓	✓	✓	✓	✓							**2KJ3002 - ■■■■■ - ■■ N1**
5.45	266	103	4 000	-	0.02	60/11	✓	✓	✓	✓	✓	✓							**2KJ3002 - ■■■■■ - ■■ M1**
4.92	295	102	4 000	-	0.03	59/12	✓	✓	✓	✓	✓	✓							**2KJ3002 - ■■■■■ - ■■ L1**
4.54	319	102	4 000	-	0.05	59/13	✓	✓	✓	✓	✓	✓							**2KJ3002 - ■■■■■ - ■■ K1**
4.14	350	102	4 000	-	0.09	29/7	✓	✓	✓	✓	✓	✓	✓						**2KJ3002 - ■■■■■ - ■■ J1**
3.44	422	101	3 510	-	0.15	55/16	✓	✓	✓	✓	✓	✓	✓						**2KJ3002 - ■■■■■ - ■■ H1**
3.24	448	101	3 350	-	0.19	55/17	✓	✓	✓	✓	✓	✓	✓						**2KJ3002 - ■■■■■ - ■■ G1**
3.06	474	101	3 200	-	0.23	55/18	✓	✓	✓	✓	✓	✓	✓						**2KJ3002 - ■■■■■ - ■■ F1**
2.60	558	102	2 540	-	0.36	13/5	✓	✓	✓	✓	✓	✓	✓						**2KJ3002 - ■■■■■ - ■■ E1**
2.23	650	102	1 930	-	0.55	49/22			✓	✓	✓	✓	✓						**2KJ3002 - ■■■■■ - ■■ D1**
1.96	740	103	1 420	-	0.78	47/24			✓	✓	✓	✓	✓						**2KJ3002 - ■■■■■ - ■■ C1**
1.65	879	103	975	-	1.1	38/23			✓	✓	✓	✓	✓						**2KJ3002 - ■■■■■ - ■■ B1**
1.44	1 007	102	1 140	-	1.81	36/25			✓	✓	✓	✓	✓						**2KJ3002 - ■■■■■ - ■■ A1**

[1] Only in conjunction with reduced-backlash version

© Siemens AG 2017

Transmission ratios and torques for high speeds

3

Selection and ordering data (continued)

i	n_2	T_{2N}	F_{R2}	φ [1]	J_G	R_{ex}	Motor frame size											Article No.
-	rpm	Nm	N	‘	10^{-4} kgm²	-	63	71	80	90	100	112	132	160	180	200	225	250	
E.69																			
9.30	156	120	6 100	-	0.007	93/10		✓	✓	✓									2KJ3003 - ■■■■■ - ■■ S1
8.45	172	105	6 100	-	0.01	93/11		✓	✓	✓									2KJ3003 - ■■■■■ - ■■ R1
7.58	191	205	6 100	-	0.02	91/12		✓	✓	✓	✓	✓							2KJ3003 - ■■■■■ - ■■ Q1
6.82	213	170	6 100	-	0.02	75/11		✓	✓	✓	✓	✓							2KJ3003 - ■■■■■ - ■■ P1
6.17	235	205	6 100	-	0.03	37/6		✓	✓	✓	✓	✓							2KJ3003 - ■■■■■ - ■■ N1
5.69	255	165	6 100	-	0.05	74/13		✓	✓	✓	✓	✓							2KJ3003 - ■■■■■ - ■■ M1
5.21	278	200	6 100	-	0.09	73/14		✓	✓	✓	✓	✓	✓	✓					2KJ3003 - ■■■■■ - ■■ L1
4.38	331	200	6 100	-	0.15	35/8		✓	✓	✓	✓	✓	✓	✓					2KJ3003 - ■■■■■ - ■■ K1
4.12	352	165	6 100	-	0.19	70/17		✓	✓	✓	✓	✓	✓	✓					2KJ3003 - ■■■■■ - ■■ J1
3.78	384	200	6 100	-	0.23	34/9		✓	✓	✓	✓	✓	✓	✓					2KJ3003 - ■■■■■ - ■■ H1
3.30	439	200	6 100	-	0.36	33/10		✓	✓	✓	✓	✓	✓	✓					2KJ3003 - ■■■■■ - ■■ G1
2.95	492	200	5 680	-	0.55	65/22			✓	✓	✓	✓	✓	✓					2KJ3003 - ■■■■■ - ■■ F1
2.58	562	197	5 120	-	0.78	31/12			✓	✓	✓	✓	✓	✓					2KJ3003 - ■■■■■ - ■■ E1
2.22	653	196	4 500	-	1.10	51/23			✓	✓	✓	✓	✓	✓					2KJ3003 - ■■■■■ - ■■ D1
1.96	740	196	4 050	-	1.81	49/25			✓	✓	✓	✓	✓	✓					2KJ3003 - ■■■■■ - ■■ C1
1.67	868	196	4 130	-	2.6	5/3					✓	✓	✓	✓					2KJ3003 - ■■■■■ - ■■ B1
1.43	1 014	195	4 170	-	3.7	10/7					✓	✓	✓	✓					2KJ3003 - ■■■■■ - ■■ A1
E.89																			
9.67	150	280	8 000	-	0.02	29/3			✓	✓	✓	✓							2KJ3004 - ■■■■■ - ■■ T1
8.73	166	280	8 000	-	0.02	96/11			✓	✓	✓	✓							2KJ3004 - ■■■■■ - ■■ S1
7.92	183	280	8 000	-	0.03	95/12			✓	✓	✓	✓							2KJ3004 - ■■■■■ - ■■ R1
7.31	198	260	8 000	-	0.05	95/13			✓	✓	✓	✓							2KJ3004 - ■■■■■ - ■■ Q1
6.64	218	260	8 000	-	0.09	93/14			✓	✓	✓	✓	✓	✓					2KJ3004 - ■■■■■ - ■■ P1
5.62	258	320	8 000	-	0.15	45/8			✓	✓	✓	✓	✓	✓					2KJ3004 - ■■■■■ - ■■ N1
5.29	274	210	8 000	-	0.19	90/17			✓	✓	✓	✓	✓	✓					2KJ3004 - ■■■■■ - ■■ M1
4.89	297	360	8 000	-	0.23	44/9			✓	✓	✓	✓	✓	✓					2KJ3004 - ■■■■■ - ■■ L1
4.35	333	360	8 000	-	0.36	87/20			✓	✓	✓	✓	✓	✓					2KJ3004 - ■■■■■ - ■■ K1
3.86	376	360	7 520	-	0.55	85/22			✓	✓	✓	✓	✓	✓					2KJ3004 - ■■■■■ - ■■ J1
3.46	419	365	6 830	-	0.78	83/24			✓	✓	✓	✓	✓	✓					2KJ3004 - ■■■■■ - ■■ H1
2.96	490	360	6 030	-	1.1	68/23			✓	✓	✓	✓	✓	✓					2KJ3004 - ■■■■■ - ■■ G1
2.64	549	360	5 410	-	1.81	66/25			✓	✓	✓	✓	✓	✓	✓				2KJ3004 - ■■■■■ - ■■ F1
2.33	622	360	5 260	-	2.6	7/3					✓	✓	✓	✓	✓				2KJ3004 - ■■■■■ - ■■ E1
2.05	707	360	5 430	-	3.7	43/21					✓	✓	✓	✓	✓				2KJ3004 - ■■■■■ - ■■ D1
1.78	815	365	5 550	-	5.4	41/23					✓	✓	✓	✓	✓				2KJ3004 - ■■■■■ - ■■ C1
1.52	954	360	5 580	-	7.6	32/21					✓	✓	✓	✓	✓				2KJ3004 - ■■■■■ - ■■ B1
1.3	1 115	360	5 580	-	11	30/23					✓	✓	✓	✓	✓				2KJ3004 - ■■■■■ - ■■ A1
E.109																			
7.19	202	565	10 500	-	0.15	115/16				✓	✓	✓	✓	✓					2KJ3005 - ■■■■■ - ■■ Q1
6.76	214	565	10 500	-	0.19	115/17				✓	✓	✓	✓	✓					2KJ3005 - ■■■■■ - ■■ P1
6.28	231	565	10 500	-	0.23	113/18				✓	✓	✓	✓	✓					2KJ3005 - ■■■■■ - ■■ N1
5.55	261	560	10 500	-	0.36	111/20				✓	✓	✓	✓	✓					2KJ3005 - ■■■■■ - ■■ M1
4.95	293	560	10 500	-	0.55	109/22				✓	✓	✓	✓	✓					2KJ3005 - ■■■■■ - ■■ L1
4.46	325	560	10 500	-	0.78	107/24				✓	✓	✓	✓	✓					2KJ3005 - ■■■■■ - ■■ K1
3.87	375	555	10 000	-	1.10	89/23				✓	✓	✓	✓	✓					2KJ3005 - ■■■■■ - ■■ J1
3.48	417	550	9 390	-	1.81	87/25				✓	✓	✓	✓	✓	✓				2KJ3005 - ■■■■■ - ■■ H1
3.04	477	545	8 440	-	2.6	73/24					✓	✓	✓	✓	✓	✓			2KJ3005 - ■■■■■ - ■■ G1
2.71	535	545	7 670	-	3.7	19/7					✓	✓	✓	✓	✓	✓	✓		2KJ3005 - ■■■■■ - ■■ F1
2.39	607	540	6 850	-	5.4	55/23					✓	✓	✓	✓	✓	✓	✓		2KJ3005 - ■■■■■ - ■■ E1
2.10	690	535	5 980	-	7.8	44/21					✓	✓	✓	✓	✓	✓	✓		2KJ3005 - ■■■■■ - ■■ D1
1.83	792	530	5 060	-	11	42/23					✓	✓	✓	✓	✓	✓	✓		2KJ3005 - ■■■■■ - ■■ C1
1.67	868	530	5 170	-	14	5/3					✓	✓	✓	✓	✓	✓	✓		2KJ3005 - ■■■■■ - ■■ B1
1.43	1 014	465	5 420	-	21	33/23							✓	✓	✓	✓	✓		2KJ3005 - ■■■■■ - ■■ A1

[1] Only in conjunction with reduced-backlash version

© Siemens AG 2017

Selection and ordering data (continued)

i	n_2	T_{2N}	F_{R2}	φ [1]	J_G	R_{ex}	Motor frame size												Article No.
-	rpm	Nm	N	‘	10^{-4} kgm²	-	63	71	80	90	100	112	132	160	180	200	225	250	
E.129																			
9.79	148	665	13 500	-	0.09	137/14				✓	✓	✓	✓	✓					**2KJ3006 - ■■■■■ - ■■ T1**
8.38	173	665	13 500	-	0.15	67/8				✓	✓	✓	✓	✓					**2KJ3006 - ■■■■■ - ■■ S1**
7.88	184	665	13 500	-	0.19	134/17				✓	✓	✓	✓	✓					**2KJ3006 - ■■■■■ - ■■ R1**
7.39	196	800	13 500	-	0.23	133/18				✓	✓	✓	✓	✓					**2KJ3006 - ■■■■■ - ■■ Q1**
6.55	221	800	13 100	-	0.36	131/20				✓	✓	✓	✓	✓					**2KJ3006 - ■■■■■ - ■■ P1**
5.82	249	800	12 500	-	0.55	64/11				✓	✓	✓	✓	✓					**2KJ3006 - ■■■■■ - ■■ N1**
5.25	276	795	12 000	-	0.78	21/4				✓	✓	✓	✓	✓					**2KJ3006 - ■■■■■ - ■■ M1**
4.65	312	795	11 100	-	1.10	107/23				✓	✓	✓	✓	✓					**2KJ3006 - ■■■■■ - ■■ L1**
4.12	352	785	10 200	-	1.81	103/25				✓	✓	✓	✓	✓	✓				**2KJ3006 - ■■■■■ - ■■ K1**
3.67	395	780	9 380	-	2.6	11/3					✓	✓	✓	✓	✓	✓			**2KJ3006 - ■■■■■ - ■■ J1**
3.29	441	780	8 570	-	3.7	23/7					✓	✓	✓	✓	✓	✓	✓		**2KJ3006 - ■■■■■ - ■■ H1**
2.91	498	770	7 780	-	5.4	67/23					✓	✓	✓	✓	✓	✓	✓		**2KJ3006 - ■■■■■ - ■■ G1**
2.57	564	765	6 880	-	9.5	18/7					✓	✓	✓	✓	✓	✓	✓	✓	**2KJ3006 - ■■■■■ - ■■ F1**
2.26	642	760	5 930	-	14	52/23					✓	✓	✓	✓	✓	✓	✓	✓	**2KJ3006 - ■■■■■ - ■■ E1**
2.05	707	765	5 450	-	18	43/21					✓	✓	✓	✓	✓	✓	✓	✓	**2KJ3006 - ■■■■■ - ■■ D1**
1.78	815	760	5 830	-	25	41/23							✓	✓	✓	✓	✓	✓	**2KJ3006 - ■■■■■ - ■■ C1**
1.46	993	755	6 190	-	40	19/13							✓	✓	✓	✓	✓	✓	**2KJ3006 - ■■■■■ - ■■ B1**
1.24	1 169	745	6 350	-	66	31/25							✓	✓	✓	✓	✓	✓	**2KJ3006 - ■■■■■ - ■■ A1**
E.149																			
9.76	149	1 200	16 000	-	0.17	166/17					✓	✓	✓	✓					**2KJ3007 - ■■■■■ - ■■ S1**
9.11	159	1 260	16 000	-	0.22	82/9					✓	✓	✓	✓					**2KJ3007 - ■■■■■ - ■■ R1**
8.10	179	1 330	15 200	-	0.33	81/10					✓	✓	✓	✓					**2KJ3007 - ■■■■■ - ■■ Q1**
7.27	199	1 350	14 300	-	0.5	80/11					✓	✓	✓	✓					**2KJ3007 - ■■■■■ - ■■ P1**
6.58	220	1 330	13 500	-	0.69	79/12					✓	✓	✓	✓					**2KJ3007 - ■■■■■ - ■■ N1**
5.78	251	1 490	10 800	-	1.08	133/23					✓	✓	✓	✓					**2KJ3007 - ■■■■■ - ■■ M1**
5.24	277	1 490	9 900	-	1.58	131/25					✓	✓	✓	✓	✓				**2KJ3007 - ■■■■■ - ■■ L1**
4.67	310	1 480	8 900	-	2.3	14/3					✓	✓	✓	✓	✓	✓			**2KJ3007 - ■■■■■ - ■■ K1**
4.19	346	1 480	7 940	-	4.0	88/21					✓	✓	✓	✓	✓	✓	✓		**2KJ3007 - ■■■■■ - ■■ J1**
3.74	388	1 480	6 890	-	4.6	86/23					✓	✓	✓	✓	✓	✓	✓		**2KJ3007 - ■■■■■ - ■■ H1**
3.33	435	1 480	5 850	-	6.7	10/3					✓	✓	✓	✓	✓	✓	✓	✓	**2KJ3007 - ■■■■■ - ■■ G1**
2.96	490	1 460	4 950	-	9.6	68/23					✓	✓	✓	✓	✓	✓	✓	✓	**2KJ3007 - ■■■■■ - ■■ F1**
2.71	535	1 460	4 140	-	12	19/7					✓	✓	✓	✓	✓	✓	✓	✓	**2KJ3007 - ■■■■■ - ■■ E1**
2.39	607	1 460	3 530	-	18	55/23							✓	✓	✓	✓	✓	✓	**2KJ3007 - ■■■■■ - ■■ D1**
1.96	740	1 470	4 840	-	9.6	51/26							✓	✓	✓	✓	✓	✓	**2KJ3007 - ■■■■■ - ■■ C1**
1.72	843	1 460	5 130	-	42	43/25							✓	✓	✓	✓	✓	✓	**2KJ3007 - ■■■■■ - ■■ B1**
1.34	1 082	1 280	5 810	-	119	39/29							✓	✓	✓	✓	✓	✓	**2KJ3007 - ■■■■■ - ■■ A1**

[1] Only in conjunction with reduced-backlash version

© Siemens AG 2017

Transmission ratios and torques for very low speeds

Selection and ordering data

i	n_2	T_{2N}	F_{R2}	φ [1]	J_G	R_{ex}	Motor frame size								Article No.
-	rpm	Nm	N	‘	10^{-4} kgm²	-	63	71	80	90	100	112	132	160	
D.29-Z19															
8 025	0.18	140	3 710	-	0.08	1966032/245	✓	✓							**2KJ3221 - ■■■■■ - ■■ C1**
7 183	0.20	140	3 710	-	0.11	251652096/35035	✓	✓							**2KJ3221 - ■■■■■ - ■■ B1**
6 379	0.23	140	3 710	-	0.13	20315664/3185	✓	✓							**2KJ3221 - ■■■■■ - ■■ A1**
Z.29-D19															
5 890	0.25	140	3 710	-	0.02	13399254/2275	✓	✓							**2KJ3121 - ■■■■■ - ■■ P1**
5 215	0.28	140	3 710	-	0.03	118648233/22750	✓	✓							**2KJ3121 - ■■■■■ - ■■ N1**
4 531	0.32	140	3 710	-	0.04	103087809/22750	✓	✓							**2KJ3121 - ■■■■■ - ■■ M1**
4 119	0.35	140	3 710	-	0.04	9371619/2275	✓	✓							**2KJ3121 - ■■■■■ - ■■ L1**
3 505	0.41	140	3 710	-	0.06	79747173/22750	✓	✓							**2KJ3121 - ■■■■■ - ■■ K1**
3 187	0.45	140	3 710	-	0.07	7249743/2275	✓	✓							**2KJ3121 - ■■■■■ - ■■ J1**
2 779	0.52	140	3 710	-	0.08	1945053/700	✓	✓							**2KJ3121 - ■■■■■ - ■■ H1**
2 487	0.58	140	3 710	-	0.11	5658336/2275	✓	✓							**2KJ3121 - ■■■■■ - ■■ G1**
2 209	0.66	140	3 710	-	0.13	20098881/9100	✓	✓							**2KJ3121 - ■■■■■ - ■■ F1**
2 039	0.71	140	3 710	-	0.16	60296643/29575	✓	✓							**2KJ3121 - ■■■■■ - ■■ E1**
1 771	0.82	140	3 710	-	0.17	56406537/31850	✓	✓							**2KJ3121 - ■■■■■ - ■■ D1**
1 539	0.94	140	3 710	-	0.18	17505477/11375	✓	✓							**2KJ3121 - ■■■■■ - ■■ C1**
1 389	1.0	140	3 710	-	0.22	1945053/1400	✓	✓							**2KJ3121 - ■■■■■ - ■■ B1**
1 308	1.1	140	3 710	-	0.26	3890106/2975	✓	✓							**2KJ3121 - ■■■■■ - ■■ A1**
Z.29-Z19															
1 114	1.3	140	3 710	-	0.02	362142/325	✓	✓							**2KJ3120 - ■■■■■ - ■■ P1**
987	1.5	140	3 710	-	0.03	3206709/3250	✓	✓	✓						**2KJ3120 - ■■■■■ - ■■ N1**
857	1.7	140	3 710	-	0.04	2786157/3250	✓	✓	✓						**2KJ3120 - ■■■■■ - ■■ M1**
779	1.9	140	3 710	-	0.05	253287/325	✓	✓	✓						**2KJ3120 - ■■■■■ - ■■ L1**
663	2.2	140	3 710	-	0.07	2155329/3250	✓	✓	✓						**2KJ3120 - ■■■■■ - ■■ K1**
603	2.4	140	3 710	-	0.08	195939/325	✓	✓	✓						**2KJ3120 - ■■■■■ - ■■ J1**
526	2.8	140	3 710	-	0.09	52569/100	✓	✓	✓						**2KJ3120 - ■■■■■ - ■■ H1**
471	3.1	140	3 710	-	0.12	152928/325	✓	✓	✓						**2KJ3120 - ■■■■■ - ■■ G1**
418	3.5	140	3 710	-	0.15	543213/1300	✓	✓	✓						**2KJ3120 - ■■■■■ - ■■ F1**
386	3.8	140	3 710	-	0.18	1629639/4225	✓	✓	✓						**2KJ3120 - ■■■■■ - ■■ E1**
335.06	4.3	140	3 710	-	0.20	1524501/4550	✓	✓	✓						**2KJ3120 - ■■■■■ - ■■ D1**
291.15	5.0	140	3 710	-	0.21	473121/1625	✓	✓	✓						**2KJ3120 - ■■■■■ - ■■ C1**
262.85	5.5	140	3 710	-	0.27	52569/200	✓	✓	✓						**2KJ3120 - ■■■■■ - ■■ B1**
247.38	5.9	140	3 710	-	0.32	105138/425	✓	✓	✓						**2KJ3120 - ■■■■■ - ■■ A1**

[1] Only in conjunction with reduced-backlash version

© Siemens AG 2017

Selection and ordering data (continued)

i	n_2	T_{2N}	F_{R2}	φ [1]	J_G	R_{ex}	Motor frame size								Article No.
-	rpm	Nm	N	‘	10^{-4} kgm²	-	63	71	80	90	100	112	132	160	
D.39-D19															
8 760	0.17	200	4 370	-	0.08	744588/85	✓	✓							**2KJ3223 - ■■■■■ - ■■ A1**
Z.39-D19															
8 075	0.18	200	4 370	-	0.02	201872/25	✓	✓							**2KJ3123 - ■■■■■ - ■■ P1**
7 150	0.2	200	4 370	-	0.03	893772/125	✓	✓							**2KJ3123 - ■■■■■ - ■■ N1**
6 212	0.23	200	4 370	-	0.04	776556/125	✓	✓							**2KJ3123 - ■■■■■ - ■■ M1**
5 648	0.26	200	4 370	-	0.04	141192/25	✓	✓							**2KJ3123 - ■■■■■ - ■■ L1**
4 806	0.3	200	4 370	-	0.06	600732/125	✓	✓							**2KJ3123 - ■■■■■ - ■■ K1**
4 369	0.33	200	4 370	-	0.07	109224/25	✓	✓							**2KJ3123 - ■■■■■ - ■■ J1**
3 810	0.38	200	4 370	-	0.08	95238/25	✓	✓							**2KJ3123 - ■■■■■ - ■■ H1**
3 410	0.43	200	4 370	-	0.11	85248/25	✓	✓							**2KJ3123 - ■■■■■ - ■■ G1**
3 028	0.48	200	4 370	-	0.13	75702/25	✓	✓							**2KJ3123 - ■■■■■ - ■■ F1**
2 795	0.52	200	4 370	-	0.16	908424/325	✓	✓							**2KJ3123 - ■■■■■ - ■■ E1**
2 428	0.6	200	4 370	-	0.17	424908/175	✓	✓							**2KJ3123 - ■■■■■ - ■■ D1**
2 110	0.69	200	4 370	-	0.18	263736/125	✓	✓							**2KJ3123 - ■■■■■ - ■■ C1**
1 905	0.76	200	4 370	-	0.22	47619/25	✓	✓							**2KJ3123 - ■■■■■ - ■■ B1**
1 793	0.81	200	4 370	-	0.26	761904/425	✓	✓							**2KJ3123 - ■■■■■ - ■■ A1**
Z.39-Z19															
1 528	0.95	200	4 370	-	0.02	38192/25	✓	✓							**2KJ3122 - ■■■■■ - ■■ S1**
1 353	1.1	200	4 370	-	0.03	169092/125	✓	✓	✓						**2KJ3122 - ■■■■■ - ■■ R1**
1 175	1.2	200	4 370	-	0.04	146916/125	✓	✓	✓						**2KJ3122 - ■■■■■ - ■■ Q1**
1 068	1.4	200	4 370	-	0.05	26712/25	✓	✓	✓						**2KJ3122 - ■■■■■ - ■■ P1**
909	1.6	200	4 370	-	0.07	113652/125	✓	✓	✓						**2KJ3122 - ■■■■■ - ■■ N1**
827	1.8	200	4 370	-	0.08	20664/25	✓	✓	✓						**2KJ3122 - ■■■■■ - ■■ M1**
721	2.0	200	4 370	-	0.09	18018/25	✓	✓	✓						**2KJ3122 - ■■■■■ - ■■ L1**
645	2.2	200	4 370	-	0.12	16128/25	✓	✓	✓						**2KJ3122 - ■■■■■ - ■■ K1**
573	2.5	200	4 370	-	0.15	14322/25	✓	✓	✓						**2KJ3122 - ■■■■■ - ■■ J1**
529	2.7	200	4 370	-	0.18	171864/325	✓	✓	✓						**2KJ3122 - ■■■■■ - ■■ H1**
459	3.2	200	4 370	-	0.20	11484/25	✓	✓	✓						**2KJ3122 - ■■■■■ - ■■ G1**
399	3.6	200	4 370	-	0.21	49896/125	✓	✓	✓						**2KJ3122 - ■■■■■ - ■■ F1**
360	4.0	200	4 370	-	0.27	9009/25	✓	✓	✓						**2KJ3122 - ■■■■■ - ■■ E1**
339.16	4.3	200	4 370	-	0.32	144144/425	✓	✓	✓						**2KJ3122 - ■■■■■ - ■■ D1**
295.68	4.9	200	4 370	-	0.36	7392/25	✓	✓	✓						**2KJ3122 - ■■■■■ - ■■ C1**
272.80	5.3	200	4 370	-	0.19	1364/5	✓	✓	✓						**2KJ3122 - ■■■■■ - ■■ B1**
236.97	6.1	200	4 370	-	0.22	8294/35	✓	✓	✓						**2KJ3122 - ■■■■■ - ■■ A1**

[1] Only in conjunction with reduced-backlash version

© Siemens AG 2017

3

Selection and ordering data (continued)

i	n_2	T_{2N}	F_{R2}	φ [1]	J_G	R_{ex}	Motor frame size								Article No.
-	rpm	Nm	N	'	10^{-4} kgm²	-	63	71	80	90	100	112	132	160	
D.49-D19															
13 709	0.11	320	5 780	-	0.06	9980343/728	✓	✓							2KJ3225 - ■■■■■ - ■■ D1
12 463	0.12	320	5 780	-	0.07	49901715/4004	✓	✓							2KJ3225 - ■■■■■ - ■■ C1
10 867	0.13	320	5 780	-	0.08	1217115/112	✓	✓							2KJ3225 - ■■■■■ - ■■ B1
9 727	0.15	320	5 780	-	0.11	9736920/1001	✓	✓							2KJ3225 - ■■■■■ - ■■ A1
Z.49-D19															
9 638	0.15	320	5 900	-	0.02	52625507/5460	✓	✓							2KJ3125 - ■■■■■ - ■■ P1
8 535	0.17	320	5 900	-	0.03	310660251/36400	✓	✓							2KJ3125 - ■■■■■ - ■■ N1
7 415	0.20	320	5 900	-	0.04	269917923/36400	✓	✓							2KJ3125 - ■■■■■ - ■■ M1
6 741	0.22	320	5 900	-	0.04	24537993/3640	✓	✓							2KJ3125 - ■■■■■ - ■■ L1
5 736	0.25	320	5 900	-	0.06	208804431/36400	✓	✓							2KJ3125 - ■■■■■ - ■■ K1
5 215	0.28	320	5 900	-	0.07	18982221/3640	✓	✓							2KJ3125 - ■■■■■ - ■■ J1
4 547	0.32	320	5 900	-	0.08	5092791/1120	✓	✓							2KJ3125 - ■■■■■ - ■■ H1
4 070	0.36	320	5 900	-	0.11	1851924/455	✓	✓							2KJ3125 - ■■■■■ - ■■ G1
3 614	0.40	320	5 900	-	0.13	52625507/14560	✓	✓							2KJ3125 - ■■■■■ - ■■ F1
3 336	0.43	320	5 900	-	0.16	157876521/47320	✓	✓							2KJ3125 - ■■■■■ - ■■ E1
2 898	0.50	320	5 900	-	0.17	147690939/50960	✓	✓							2KJ3125 - ■■■■■ - ■■ D1
2 518	0.58	320	5 900	-	0.18	45835119/18200	✓	✓							2KJ3125 - ■■■■■ - ■■ C1
2 274	0.64	320	5 900	-	0.22	5092791/2240	✓	✓							2KJ3125 - ■■■■■ - ■■ B1
2 140	0.68	320	5 900	-	0.26	5092791/2380	✓	✓							2KJ3125 - ■■■■■ - ■■ A1
Z.49-Z19															
1 823	0.80	320	5 900	-	0.02	1422311/780	✓	✓							2KJ3124 - ■■■■■ - ■■ S1
1 615	0.90	320	5 900	-	0.03	8396223/5200	✓	✓	✓						2KJ3124 - ■■■■■ - ■■ R1
1 403	1.0	320	5 900	-	0.04	7295079/5200	✓	✓	✓						2KJ3124 - ■■■■■ - ■■ Q1
1 275	1.1	320	5 900	-	0.05	663189/520	✓	✓	✓						2KJ3124 - ■■■■■ - ■■ P1
1 085	1.3	320	5 900	-	0.07	5643363/5200	✓	✓	✓						2KJ3124 - ■■■■■ - ■■ N1
987	1.5	320	5 900	-	0.08	513033/520	✓	✓	✓						2KJ3124 - ■■■■■ - ■■ M1
860	1.7	320	5 900	-	0.09	137643/160	✓	✓	✓						2KJ3124 - ■■■■■ - ■■ L1
770	1.9	320	5 900	-	0.12	50052/65	✓	✓	✓						2KJ3124 - ■■■■■ - ■■ K1
684	2.1	320	5 900	-	0.15	1422311/2080	✓	✓	✓						2KJ3124 - ■■■■■ - ■■ J1
631	2.3	320	5 900	-	0.18	4266933/6760	✓	✓	✓						2KJ3124 - ■■■■■ - ■■ H1
548	2.6	320	5 900	-	0.20	3991647/7280	✓	✓	✓						2KJ3124 - ■■■■■ - ■■ G1
476	3.0	320	5 900	-	0.21	1238787/2600	✓	✓	✓						2KJ3124 - ■■■■■ - ■■ F1
430	3.4	320	5 900	-	0.27	137643/320	✓	✓	✓						2KJ3124 - ■■■■■ - ■■ E1
405	3.6	320	5 900	-	0.32	137643/340	✓	✓	✓						2KJ3124 - ■■■■■ - ■■ D1
353	4.1	320	5 900	-	0.36	45881/130	✓	✓	✓						2KJ3124 - ■■■■■ - ■■ C1
325.62	4.5	320	5 900	-	0.19	1422311/4368	✓	✓	✓						2KJ3124 - ■■■■■ - ■■ B1
282.85	5.1	320	5 900	-	0.22	1330549/4704	✓	✓	✓						2KJ3124 - ■■■■■ - ■■ A1

[1] Only in conjunction with reduced-backlash version

© Siemens AG 2017

Selection and ordering data (continued)

i	n_2	T_{2N}	F_{R2}	φ[1]	J_G	R_{ex}	Motor frame size								Article No.
-	rpm	Nm	N	'	10^{-4} kgm²	-	63	71	80	90	100	112	132	160	
D.59-D19															
14 985	0.10	450	7 660	-	0.06	10908747/728	✓	✓							**2KJ3227 - ■■■■■ - ■■ D1**
13 622	0.11	450	7 660	-	0.07	54543735/4004	✓	✓							**2KJ3227 - ■■■■■ - ■■ C1**
11 878	0.12	450	7 660	-	0.08	1330335/112	✓	✓							**2KJ3227 - ■■■■■ - ■■ B1**
10 632	0.14	450	7 660	-	0.11	10642680/1001	✓	✓							**2KJ3227 - ■■■■■ - ■■ A1**
D.59-Z19															
739	2.0	450	7 660	-	0.22	579275/784	✓	✓	✓						**2KJ3226 - ■■■■■ - ■■ J1**
642	2.3	450	7 660	-	0.23	35955/56	✓	✓	✓						**2KJ3226 - ■■■■■ - ■■ H1**
580	2.5	450	7 660	-	0.30	259675/448	✓	✓	✓						**2KJ3226 - ■■■■■ - ■■ G1**
546	2.7	450	7 660	-	0.35	15275/28	✓	✓	✓						**2KJ3226 - ■■■■■ - ■■ F1**
507	2.9	450	7 660	-	0.20	1362295/2688	✓	✓	✓						**2KJ3226 - ■■■■■ - ■■ E1**
440	3.3	450	7 660	-	0.23	16567265/37632	✓	✓	✓						**2KJ3226 - ■■■■■ - ■■ D1**
383	3.8	450	7 660	-	0.24	342771/896	✓	✓	✓						**2KJ3226 - ■■■■■ - ■■ C1**
345.36	4.2	450	7 660	-	0.31	7426705/21504	✓	✓	✓						**2KJ3226 - ■■■■■ - ■■ B1**
325.05	4.5	450	7 660	-	0.37	436865/1344	✓	✓	✓						**2KJ3226 - ■■■■■ - ■■ A1**
Z.59-D19															
9 577	0.15	450	7 660	-	0.02	5229173/546	✓	✓							**2KJ3127 - ■■■■■ - ■■ P1**
8 480	0.17	450	7 660	-	0.03	30868989/3640	✓	✓							**2KJ3127 - ■■■■■ - ■■ N1**
7 368	0.20	450	7 660	-	0.04	26820597/3640	✓	✓							**2KJ3127 - ■■■■■ - ■■ M1**
6 698	0.22	450	7 660	-	0.04	26820597/4004	✓	✓							**2KJ3127 - ■■■■■ - ■■ L1**
5 700	0.25	450	7 660	-	0.06	20748009/3640	✓	✓							**2KJ3127 - ■■■■■ - ■■ K1**
5 182	0.28	450	7 660	-	0.07	20748009/4004	✓	✓							**2KJ3127 - ■■■■■ - ■■ J1**
4 518	0.32	450	7 660	-	0.08	506049/112	✓	✓							**2KJ3127 - ■■■■■ - ■■ H1**
4 044	0.36	450	7 660	-	0.11	4048392/1001	✓	✓							**2KJ3127 - ■■■■■ - ■■ G1**
3 591	0.40	450	7 660	-	0.13	5229173/1456	✓	✓							**2KJ3127 - ■■■■■ - ■■ F1**
3 315	0.44	450	7 660	-	0.16	15687519/4732	✓	✓							**2KJ3127 - ■■■■■ - ■■ E1**
2 880	0.50	450	7 660	-	0.17	14675421/5096	✓	✓							**2KJ3127 - ■■■■■ - ■■ D1**
2 502	0.58	450	7 660	-	0.18	4554441/1820	✓	✓							**2KJ3127 - ■■■■■ - ■■ C1**
2 259	0.64	450	7 660	-	0.22	506049/224	✓	✓							**2KJ3127 - ■■■■■ - ■■ B1**
2 126	0.68	450	7 660	-	0.26	506049/238	✓	✓							**2KJ3127 - ■■■■■ - ■■ A1**
Z.59-Z19															
1 812	0.80	450	7 660	-	0.02	141329/78	✓	✓							**2KJ3126 - ■■■■■ - ■■ G1**
1 604	0.90	450	7 660	-	0.03	834297/520	✓	✓	✓						**2KJ3126 - ■■■■■ - ■■ F1**
1 394	1.0	450	7 660	-	0.04	724881/520	✓	✓	✓						**2KJ3126 - ■■■■■ - ■■ E1**
1 267	1.1	450	7 660	-	0.05	724881/572	✓	✓	✓						**2KJ3126 - ■■■■■ - ■■ D1**
1 078	1.3	450	7 660	-	0.07	560757/520	✓	✓	✓						**2KJ3126 - ■■■■■ - ■■ C1**
980	1.5	450	7 660	-	0.08	560757/572	✓	✓	✓						**2KJ3126 - ■■■■■ - ■■ B1**
855	1.7	450	7 660	-	0.09	13677/16	✓	✓	✓						**2KJ3126 - ■■■■■ - ■■ A1**

[1] Only in conjunction with reduced-backlash version

© Siemens AG 2017

3

Selection and ordering data (continued)

i	n_2	T_{2N}	F_{R2}	φ [1]	J_G	R_{ex}	Motor frame size								Article No.
-	rpm	Nm	N	'	10^{-4} kgm²	-	63	71	80	90	100	112	132	160	
D.69-D19															
14 575	0.10	600	11 000	-	0.07	9284040/637	✓	✓							2KJ3230 - ■■■■■ - ■■ C1
12 708	0.11	600	11 000	-	0.08	622710/49	✓	✓							2KJ3230 - ■■■■■ - ■■ B1
11 375	0.13	600	11 000	-	0.11	7246080/637	✓	✓							2KJ3230 - ■■■■■ - ■■ A1
D.69-Z19															
1 532	0.95	600	11 000	-	0.20	976140/637	✓	✓	✓						2KJ3228 - ■■■■■ - ■■ Q1
1 332	1.1	600	11 000	-	0.21	121176/91	✓	✓	✓						2KJ3228 - ■■■■■ - ■■ P1
1 202	1.2	600	11 000	-	0.27	8415/7	✓	✓	✓						2KJ3228 - ■■■■■ - ■■ N1
1 131	1.3	600	11 000	-	0.32	7920/7	✓	✓	✓						2KJ3228 - ■■■■■ - ■■ M1
986	1.5	600	11 000	-	0.37	89760/91	✓	✓	✓						2KJ3228 - ■■■■■ - ■■ L1
910	1.6	600	11 000	-	0.19	579700/637	✓	✓	✓						2KJ3228 - ■■■■■ - ■■ K1
791	1.8	600	11 000	-	0.22	271150/343	✓	✓	✓						2KJ3228 - ■■■■■ - ■■ J1
687	2.1	600	11 000	-	0.23	33660/49	✓	✓	✓						2KJ3228 - ■■■■■ - ■■ H1
620	2.3	600	11 000	-	0.30	60775/98	✓	✓	✓						2KJ3228 - ■■■■■ - ■■ G1
584	2.5	600	11 000	-	0.35	28600/49	✓	✓	✓						2KJ3228 - ■■■■■ - ■■ F1
542	2.7	600	11 000	-	0.20	318835/588	✓	✓	✓						2KJ3228 - ■■■■■ - ■■ E1
471	3.1	600	11 000	-	0.23	3877445/8232	✓	✓	✓						2KJ3228 - ■■■■■ - ■■ D1
409	3.5	600	11 000	-	0.24	80223/196	✓	✓	✓						2KJ3228 - ■■■■■ - ■■ C1
370	3.9	600	11 000	-	0.31	1738165/4704	✓	✓	✓						2KJ3228 - ■■■■■ - ■■ B1
347.77	4.2	600	11 000	-	0.37	102245/294	✓	✓	✓						2KJ3228 - ■■■■■ - ■■ A1
Z.69-D19															
10 247	0.14	600	11 000	-	0.02	19581584/1911	✓	✓							2KJ3130 - ■■■■■ - ■■ Q1
9 073	0.16	600	11 000	-	0.03	28898628/3185	✓	✓							2KJ3130 - ■■■■■ - ■■ P1
7 883	0.18	600	11 000	-	0.04	25108644/3185	✓	✓							2KJ3130 - ■■■■■ - ■■ N1
7 167	0.2	600	11 000	-	0.04	4565208/637	✓	✓							2KJ3130 - ■■■■■ - ■■ M1
6 098	0.24	600	11 000	-	0.06	19423668/3185	✓	✓							2KJ3130 - ■■■■■ - ■■ L1
5 544	0.26	600	11 000	-	0.07	3531576/637	✓	✓							2KJ3130 - ■■■■■ - ■■ K1
4 834	0.3	600	11 000	-	0.08	236874/49	✓	✓							2KJ3130 - ■■■■■ - ■■ J1
4 327	0.34	600	11 000	-	0.11	2756352/637	✓	✓							2KJ3130 - ■■■■■ - ■■ H1
3 843	0.38	600	11 000	-	0.13	2447698/637	✓	✓							2KJ3130 - ■■■■■ - ■■ G1
3 547	0.41	600	11 000	-	0.16	29372376/8281	✓	✓							2KJ3130 - ■■■■■ - ■■ F1
3 081	0.47	600	11 000	-	0.17	13738692/4459	✓	✓							2KJ3130 - ■■■■■ - ■■ E1
2 677	0.54	600	11 000	-	0.18	8527464/3185	✓	✓							2KJ3130 - ■■■■■ - ■■ D1
2 417	0.6	600	11 000	-	0.22	118437/49	✓	✓							2KJ3130 - ■■■■■ - ■■ C1
2 275	0.64	600	11 000	-	0.26	1894992/833	✓	✓							2KJ3130 - ■■■■■ - ■■ B1
1 983	0.73	600	11 000	-	0.29	1263328/637	✓	✓							2KJ3130 - ■■■■■ - ■■ A1
Z.69-Z19															
1 939	0.75	600	11 000	-	0.02	529232/273	✓	✓							2KJ3128 - ■■■■■ - ■■ B1
1 717	0.84	600	11 000	-	0.03	781044/455	✓	✓	✓						2KJ3128 - ■■■■■ - ■■ A1

[1] Only in conjunction with reduced-backlash version

© Siemens AG 2017

Selection and ordering data (continued)

i	n_2	T_{2N}	F_{R2}	φ[1]	J_G	R_{ex}	Motor frame size								Article No.
-	rpm	Nm	N	'	10^{-4} kgm²	-	63	71	80	90	100	112	132	160	
D.79-D39															
15 344	0.09	840	13 400	-	0.21	5738565/374	✓	✓	✓	✓	✓	✓			**2KJ3232 - ■■■■■ - ■■ D1**
13 434	0.11	840	13 400	-	0.25	6394401/476	✓	✓	✓	✓	✓	✓			**2KJ3232 - ■■■■■ - ■■ C1**
11 778	0.12	840	13 400	-	0.23	22025159/1870	✓	✓	✓	✓	✓	✓			**2KJ3232 - ■■■■■ - ■■ B1**
10 686	0.14	840	13 400	-	0.33	31972005/2992	✓	✓	✓	✓	✓	✓			**2KJ3232 - ■■■■■ - ■■ A1**
Z.79-D39															
10 451	0.14	840	13 400	-	0.03	47969467/4590	✓	✓							**2KJ3132 - ■■■■■ - ■■ R1**
9 269	0.16	840	13 400	-	0.05	2085629/225	✓	✓							**2KJ3132 - ■■■■■ - ■■ Q1**
8 043	0.18	840	13 400	-	0.05	123052111/15300	✓	✓							**2KJ3132 - ■■■■■ - ■■ P1**
7 311	0.20	840	13 400	-	0.07	123052111/16830	✓	✓	✓	✓					**2KJ3132 - ■■■■■ - ■■ N1**
6 271	0.23	840	13 400	-	0.08	47969467/7650	✓	✓	✓	✓					**2KJ3132 - ■■■■■ - ■■ M1**
5 700	0.25	840	13 400	-	0.10	47969467/8415	✓	✓	✓	✓					**2KJ3132 - ■■■■■ - ■■ L1**
4 998	0.29	840	13 400	-	0.12	22941919/4590	✓	✓	✓	✓	✓	✓			**2KJ3132 - ■■■■■ - ■■ K1**
4 461	0.33	840	13 400	-	0.15	4171258/935	✓	✓	✓	✓	✓	✓			**2KJ3132 - ■■■■■ - ■■ J1**
3 976	0.36	840	13 400	-	0.17	14599403/3672	✓	✓	✓	✓	✓	✓			**2KJ3132 - ■■■■■ - ■■ H1**
3 670	0.40	840	13 400	-	0.21	1123031/306	✓	✓	✓	✓	✓	✓			**2KJ3132 - ■■■■■ - ■■ G1**
3 213	0.45	840	13 400	-	0.25	3277417/1020	✓	✓	✓	✓	✓	✓			**2KJ3132 - ■■■■■ - ■■ F1**
2 817	0.51	840	13 400	-	0.23	64654499/22950	✓	✓	✓	✓	✓	✓			**2KJ3132 - ■■■■■ - ■■ E1**
2 556	0.57	840	13 400	-	0.33	2085629/816	✓	✓	✓	✓	✓	✓			**2KJ3132 - ■■■■■ - ■■ D1**
2 406	0.60	840	13 400	-	0.39	2085629/867	✓	✓	✓	✓	✓	✓			**2KJ3132 - ■■■■■ - ■■ C1**
2 120	0.68	840	13 400	-	0.43	14599403/6885	✓	✓	✓	✓	✓	✓			**2KJ3132 - ■■■■■ - ■■ B1**
1 840	0.79	840	13 400	-	0.58	6256887/3400	✓	✓	✓	✓	✓	✓			**2KJ3132 - ■■■■■ - ■■ A1**
Z.79-Z39															
2 485	0.58	840	13 400	-	0.06	4025749/1620	✓	✓							**2KJ3131 - ■■■■■ - ■■ T1**
2 210	0.66	840	13 400	-	0.07	1988623/900	✓	✓	✓	✓					**2KJ3131 - ■■■■■ - ■■ S1**
1 940	0.75	840	13 400	-	0.08	48503/25	✓	✓	✓	✓					**2KJ3131 - ■■■■■ - ■■ R1**
1 764	0.82	840	13 400	-	0.10	97006/55	✓	✓	✓	✓					**2KJ3131 - ■■■■■ - ■■ Q1**
1 509	0.96	840	13 400	-	0.12	339521/225	✓	✓	✓	✓					**2KJ3131 - ■■■■■ - ■■ P1**
1 372	1.1	840	13 400	-	0.14	679042/495	✓	✓	✓	✓					**2KJ3131 - ■■■■■ - ■■ N1**
1 213	1.2	840	13 400	-	0.17	48503/40	✓	✓	✓	✓	✓	✓			**2KJ3131 - ■■■■■ - ■■ M1**
1 102	1.3	840	13 400	-	0.22	48503/44	✓	✓	✓	✓	✓	✓			**2KJ3131 - ■■■■■ - ■■ L1**
966	1.5	840	13 400	-	0.26	2085629/2160	✓	✓	✓	✓	✓	✓			**2KJ3131 - ■■■■■ - ■■ K1**
891	1.6	840	13 400	-	0.31	160433/180	✓	✓	✓	✓	✓	✓			**2KJ3131 - ■■■■■ - ■■ J1**
789	1.8	840	13 400	-	0.36	284089/360	✓	✓	✓	✓	✓	✓			**2KJ3131 - ■■■■■ - ■■ H1**
657	2.2	840	13 400	-	0.48	630539/960	✓	✓	✓	✓	✓	✓			**2KJ3131 - ■■■■■ - ■■ G1**
618	2.3	840	13 400	-	0.56	630539/1020	✓	✓	✓	✓	✓	✓			**2KJ3131 - ■■■■■ - ■■ F1**
554	2.6	840	13 400	-	0.61	1794611/3240	✓	✓	✓	✓	✓	✓			**2KJ3131 - ■■■■■ - ■■ E1**
472	3.1	840	13 400	-	0.79	339521/720	✓	✓	✓	✓	✓	✓			**2KJ3131 - ■■■■■ - ■■ D1**
455	3.2	840	13 400	-	0.36	21853/48	✓	✓	✓	✓	✓	✓			**2KJ3131 - ■■■■■ - ■■ C1**
379	3.8	840	13 400	-	0.48	48503/128	✓	✓	✓	✓	✓	✓			**2KJ3131 - ■■■■■ - ■■ B1**
357	4.1	840	13 400	-	0.56	48503/136	✓	✓	✓	✓	✓	✓			**2KJ3131 - ■■■■■ - ■■ A1**

[1] Only in conjunction with reduced-backlash version

© Siemens AG 2017

3

Selection and ordering data (continued)

i	n_2	T_{2N}	F_{R2}	φ[1]	J_G	R_{ex}	Motor frame size								Article No.
-	rpm	Nm	N	'	10^{-4} kgm²	-	63	71	80	90	100	112	132	160	
D.89-D39															
16 496	0.09	1 680	18 500	-	0.12	214526312/13005	✓	✓	✓	✓	✓	✓			**2KJ3234 - ■■■■■ - ■■ B1**
14 723	0.1	1 680	18 500	-	0.15	234028704/15895	✓	✓	✓	✓	✓	✓			**2KJ3234 - ■■■■■ - ■■ A1**
D.89-Z39															
715	2.0	1 680	18 500	-	0.63	6987123/9775	✓	✓	✓	✓	✓	✓			**2KJ3233 - ■■■■■ - ■■ H1**
673	2.2	1 680	18 500	-	0.73	111793968/166175	✓	✓	✓	✓	✓	✓			**2KJ3233 - ■■■■■ - ■■ G1**
603	2.4	1 680	18 500	-	0.83	17676824/29325	✓	✓	✓	✓	✓	✓			**2KJ3233 - ■■■■■ - ■■ F1**
513	2.8	1 680	18 500	-	1.09	5016396/9775	✓	✓	✓	✓	✓	✓			**2KJ3233 - ■■■■■ - ■■ E1**
480	3.0	1 680	18 500	-	0.66	1270386/2645	✓	✓	✓	✓	✓	✓			**2KJ3233 - ■■■■■ - ■■ D1**
452	3.2	1 680	18 500	-	0.77	20326176/44965	✓	✓	✓	✓	✓	✓			**2KJ3233 - ■■■■■ - ■■ C1**
405	3.6	1 680	18 500	-	0.87	3213968/7935	✓	✓	✓	✓	✓	✓			**2KJ3233 - ■■■■■ - ■■ B1**
345	4.2	1 680	18 500	-	1.15	912072/2645	✓	✓	✓	✓	✓	✓			**2KJ3233 - ■■■■■ - ■■ A1**
Z.89-D39															
13 495	0.11	1 680	18 500	-	0.03	464574838/34425	✓	✓							**2KJ3134 - ■■■■■ - ■■ N1**
11 970	0.12	1 680	18 500	-	0.05	40397812/3375	✓	✓							**2KJ3134 - ■■■■■ - ■■ M1**
10 385	0.14	1 680	18 500	-	0.05	595867727/57375	✓	✓							**2KJ3134 - ■■■■■ - ■■ .L1**
9 441	0.15	1 680	18 500	-	0.07	1191735454/126225	✓	✓	✓	✓					**2KJ3134 - ■■■■■ - ■■ K1**
8 097	0.18	1 680	18 500	-	0.08	464574838/57375	✓	✓	✓	✓					**2KJ3134 - ■■■■■ - ■■ J1**
7 361	0.20	1 680	18 500	-	0.1	929149676/126225	✓	✓	✓	✓					**2KJ3134 - ■■■■■ - ■■ H1**
6 454	0.22	1 680	18 500	-	0.12	222187966/34425	✓	✓	✓	✓	✓	✓			**2KJ3134 - ■■■■■ - ■■ G1**
5 761	0.25	1 680	18 500	-	0.15	80795624/14025	✓	✓	✓	✓	✓	✓			**2KJ3134 - ■■■■■ - ■■ F1**
5 134	0.28	1 680	18 500	-	0.17	70696171/13770	✓	✓	✓	✓	✓	✓			**2KJ3134 - ■■■■■ - ■■ E1**
4 739	0.31	1 680	18 500	-	0.21	10876334/2295	✓	✓	✓	✓	✓	✓			**2KJ3134 - ■■■■■ - ■■ D1**
4 149	0.35	1 680	18 500	-	0.25	15870569/3825	✓	✓	✓	✓	✓	✓			**2KJ3134 - ■■■■■ - ■■ C1**
3 638	0.40	1 680	18 500	-	0.23	626166086/172125	✓	✓	✓	✓	✓	✓			**2KJ3134 - ■■■■■ - ■■ B1**
3 300	0.44	1 680	18 500	-	0.33	10099453/3060	✓	✓	✓	✓	✓	✓			**2KJ3134 - ■■■■■ - ■■ A1**
Z.89-Z39															
3 209	0.45	1 680	18 500	-	0.06	19494293/6075	✓	✓							**2KJ3133 - ■■■■■ - ■■ N1**
2 853	0.51	1 680	18 500	-	0.07	9629711/3375	✓	✓	✓	✓					**2KJ3133 - ■■■■■ - ■■ M1**
2 505	0.58	1 680	18 500	-	0.08	939484/375	✓	✓	✓	✓					**2KJ3133 - ■■■■■ - ■■ .L1**
2 278	0.64	1 680	18 500	-	0.10	1878968/825	✓	✓	✓	✓					**2KJ3133 - ■■■■■ - ■■ K1**
1 949	0.74	1 680	18 500	-	0.12	6576388/3375	✓	✓	✓	✓					**2KJ3133 - ■■■■■ - ■■ J1**
1 771	0.82	1 680	18 500	-	0.14	13152776/7425	✓	✓	✓	✓					**2KJ3133 - ■■■■■ - ■■ H1**
1 566	0.93	1 680	18 500	-	0.17	234871/150	✓	✓	✓	✓	✓	✓			**2KJ3133 - ■■■■■ - ■■ G1**
1 423	1.0	1 680	18 500	-	0.22	234871/165	✓	✓	✓	✓	✓	✓			**2KJ3133 - ■■■■■ - ■■ F1**
1 247	1.2	1 680	18 500	-	0.26	10099453/8100	✓	✓	✓	✓	✓	✓			**2KJ3133 - ■■■■■ - ■■ E1**
1 151	1.3	1 680	18 500	-	0.31	776881/675	✓	✓	✓	✓	✓	✓			**2KJ3133 - ■■■■■ - ■■ D1**
1 019	1.4	1 680	18 500	-	0.36	1375673/1350	✓	✓	✓	✓	✓	✓			**2KJ3133 - ■■■■■ - ■■ C1**
848	1.7	1 680	18 500	-	0.48	3053323/3600	✓	✓	✓	✓	✓	✓			**2KJ3133 - ■■■■■ - ■■ B1**
798	1.8	1 680	18 500	-	0.56	3053323/3825	✓	✓	✓	✓	✓	✓			**2KJ3133 - ■■■■■ - ■■ A1**

[1] Only in conjunction with reduced-backlash version

© Siemens AG 2017

Selection and ordering data (continued)

i	n_2	T_{2N}	F_{R2}	φ[1]	J_G	R_{ex}	Motor frame size								Article No.
-	rpm	Nm	N	'	10^{-4} kgm²	-	63	71	80	90	100	112	132	160	
D.109-D39															
19 321	0.08	3 100	20 200	-	0.05	59992439/3105	✓	✓							**2KJ3236 - ■■■■■ - ■■ T1**
17 565	0.08	3 100	20 200	-	0.07	119984878/6831	✓	✓	✓	✓					**2KJ3236 - ■■■■■ - ■■ S1**
15 064	0.1	3 100	20 200	-	0.08	2033642/135	✓	✓	✓	✓					**2KJ3236 - ■■■■■ - ■■ R1**
13 695	0.11	3 100	20 200	-	0.10	4067284/297	✓	✓	✓	✓					**2KJ3236 - ■■■■■ - ■■ Q1**
12 008	0.12	3 100	20 200	-	0.12	22370062/1863	✓	✓	✓	✓	✓	✓			**2KJ3236 - ■■■■■ - ■■ P1**
10 717	0.14	3 100	20 200	-	0.15	8134568/759	✓	✓	✓	✓	✓	✓			**2KJ3236 - ■■■■■ - ■■ N1**
9 551	0.15	3 100	20 200	-	0.18	35588735/3726	✓	✓	✓	✓	✓	✓			**2KJ3236 - ■■■■■ - ■■ M1**
8 817	0.16	3 100	20 200	-	0.21	5475190/621	✓	✓	✓	✓	✓	✓			**2KJ3236 - ■■■■■ - ■■ L1**
7 719	0.19	3 100	20 200	-	0.25	11185031/1449	✓	✓	✓	✓	✓	✓			**2KJ3236 - ■■■■■ - ■■ K1**
6 768	0.21	3 100	20 200	-	0.23	63042902/9315	✓	✓	✓	✓	✓	✓			**2KJ3236 - ■■■■■ - ■■ J1**
6 140	0.24	3 100	20 200	-	0.33	5084105/828	✓	✓	✓	✓	✓	✓			**2KJ3236 - ■■■■■ - ■■ H1**
D.109-Z39															
5 970	0.24	3 100	20 200	-	0.06	33365917/5589	✓	✓							**2KJ3235 - ■■■■■ - ■■ A2**
5 308	0.27	3 100	20 200	-	0.07	16481959/3105	✓	✓	✓	✓					**2KJ3235 - ■■■■■ - ■■ X1**
4 661	0.31	3 100	20 200	-	0.09	1607996/345	✓	✓	✓	✓					**2KJ3235 - ■■■■■ - ■■ W1**
4 237	0.34	3 100	20 200	-	0.10	3215992/759	✓	✓	✓	✓					**2KJ3235 - ■■■■■ - ■■ V1**
3 625	0.4	3 100	20 200	-	0.12	11255972/3105	✓	✓	✓	✓					**2KJ3235 - ■■■■■ - ■■ U1**
3 296	0.44	3 100	20 200	-	0.15	22511944/6831	✓	✓	✓	✓					**2KJ3235 - ■■■■■ - ■■ T1**
2 913	0.5	3 100	20 200	-	0.17	401999/138	✓	✓	✓	✓	✓	✓			**2KJ3235 - ■■■■■ - ■■ S1**
2 648	0.55	3 100	20 200	-	0.23	2009995/759	✓	✓	✓	✓	✓	✓			**2KJ3235 - ■■■■■ - ■■ R1**
2 320	0.62	3 100	20 200	-	0.27	17285957/7452	✓	✓	✓	✓	✓	✓			**2KJ3235 - ■■■■■ - ■■ Q1**
2 141	0.68	3 100	20 200	-	0.32	1329689/621	✓	✓	✓	✓	✓	✓			**2KJ3235 - ■■■■■ - ■■ P1**
1 896	0.76	3 100	20 200	-	0.38	16481959/8694	✓	✓	✓	✓	✓	✓			**2KJ3235 - ■■■■■ - ■■ N1**
1 578	0.92	3 100	20 200	-	0.50	5225987/3312	✓	✓	✓	✓	✓	✓			**2KJ3235 - ■■■■■ - ■■ M1**
1 485	0.98	3 100	20 200	-	0.59	307411/207	✓	✓	✓	✓	✓	✓			**2KJ3235 - ■■■■■ - ■■ L1**
1 331	1.1	3 100	20 200	-	0.64	14873963/11178	✓	✓	✓	✓	✓	✓			**2KJ3235 - ■■■■■ - ■■ K1**
1 133	1.3	3 100	20 200	-	0.84	2813993/2484	✓	✓	✓	✓	✓	✓			**2KJ3235 - ■■■■■ - ■■ J1**
971	1.5	3 100	20 200	-	1.10	401999/414			✓	✓	✓	✓			**2KJ3235 - ■■■■■ - ■■ H1**
836	1.7	3 100	20 200	-	1.40	12461969/14904			✓	✓	✓	✓			**2KJ3235 - ■■■■■ - ■■ G1**
690	2.1	3 100	20 200	-	0.73	122609695/177744	✓	✓	✓	✓	✓	✓			**2KJ3235 - ■■■■■ - ■■ F1**
649	2.2	3 100	20 200	-	0.84	7212335/11109	✓	✓	✓	✓	✓	✓			**2KJ3235 - ■■■■■ - ■■ E1**
582	2.5	3 100	20 200	-	0.96	348966055/599886	✓	✓	✓	✓	✓	✓			**2KJ3235 - ■■■■■ - ■■ D1**
495	2.9	3 100	20 200	-	1.28	9431515/19044	✓	✓	✓	✓	✓	✓			**2KJ3235 - ■■■■■ - ■■ C1**
424	3.4	3 100	20 200	-	1.69	9431515/22218			✓	✓	✓	✓			**2KJ3235 - ■■■■■ - ■■ B1**
366	4	3 100	20 200	-	2.20	292376965/799848			✓	✓	✓	✓			**2KJ3235 - ■■■■■ - ■■ A1**

[1] Only in conjunction with reduced-backlash version

© Siemens AG 2017

3

Selection and ordering data (continued)

i	n_2	T_{2N}	F_{R2}	φ [1]	J_G	R_{ex}	Motor frame size								Article No.
-	rpm	Nm	N	'	10^{-4} kgm²	-	63	71	80	90	100	112	132	160	
D.129-D49															
19 506	0.07	5 000	27 000	-	0.12	1643206859/84240	✓	✓	✓	✓					**2KJ3238 - ■■■■■ - ■■ L1**
17 733	0.08	5 000	27 000	-	0.14	1643206859/92664	✓	✓	✓	✓					**2KJ3238 - ■■■■■ - ■■ K1**
15 675	0.09	5 000	27 000	-	0.17	234743837/14976	✓	✓	✓	✓	✓	✓			**2KJ3238 - ■■■■■ - ■■ J1**
14 250	0.1	5 000	27 000	-	0.22	1173719185/82368	✓	✓	✓	✓	✓	✓			**2KJ3238 - ■■■■■ - ■■ H1**
12 482	0.12	5 000	27 000	-	0.26	10093984991/808704	✓	✓	✓	✓	✓	✓			**2KJ3238 - ■■■■■ - ■■ G1**
11 522	0.13	5 000	27 000	-	0.31	10093984991/876096	✓	✓	✓	✓	✓	✓			**2KJ3238 - ■■■■■ - ■■ F1**
10 201	0.14	5 000	27 000	-	0.37	9624497317/943488	✓	✓	✓	✓	✓	✓	✓		**2KJ3238 - ■■■■■ - ■■ E1**
8 490	0.17	5 000	27 000	-	0.50	234743837/27648	✓	✓	✓	✓	✓	✓	✓		**2KJ3238 - ■■■■■ - ■■ D1**
7 991	0.18	5 000	27 000	-	0.59	13808461/1728	✓	✓	✓	✓	✓	✓	✓		**2KJ3238 - ■■■■■ - ■■ C1**
7 160	0.2	5 000	27 000	-	0.65	8685521969/1213056	✓	✓	✓	✓	✓	✓	✓		**2KJ3238 - ■■■■■ - ■■ B1**
6 096	0.24	5 000	27 000	-	0.85	1643206859/269568	✓	✓	✓	✓	✓	✓	✓		**2KJ3238 - ■■■■■ - ■■ A1**
D.129-Z49															
5 963	0.24	5 000	27 000	-	0.18	1339420717/224640	✓	✓	✓	✓					**2KJ3237 - ■■■■■ - ■■ B2**
5 420	0.27	5 000	27 000	-	0.21	1339420717/247104	✓	✓	✓	✓					**2KJ3237 - ■■■■■ - ■■ A2**
4 610	0.31	5 000	27 000	-	0.27	69042305/14976	✓	✓	✓	✓					**2KJ3237 - ■■■■■ - ■■ X1**
4 191	0.35	5 000	27 000	-	0.32	345211525/82368	✓	✓	✓	✓					**2KJ3237 - ■■■■■ - ■■ W1**
3 739	0.39	5 000	27 000	-	0.37	1008017653/269568	✓	✓	✓	✓	✓	✓			**2KJ3237 - ■■■■■ - ■■ V1**
3 353	0.43	5 000	27 000	-	0.45	69042305/20592	✓	✓	✓	✓	✓	✓			**2KJ3237 - ■■■■■ - ■■ U1**
3 022	0.48	5 000	27 000	-	0.53	814699199/269568	✓	✓	✓	✓	✓	✓			**2KJ3237 - ■■■■■ - ■■ T1**
2 790	0.52	5 000	27 000	-	0.63	814699199/292032	✓	✓	✓	✓	✓	✓			**2KJ3237 - ■■■■■ - ■■ S1**
2 547	0.57	5 000	27 000	-	0.74	400445369/157248	✓	✓	✓	✓	✓	✓	✓		**2KJ3237 - ■■■■■ - ■■ R1**
2 113	0.69	5 000	27 000	-	0.95	759465355/359424	✓	✓	✓	✓	✓	✓	✓		**2KJ3237 - ■■■■■ - ■■ Q1**
1 989	0.73	5 000	27 000	-	1.09	759465355/381888	✓	✓	✓	✓	✓	✓	✓		**2KJ3237 - ■■■■■ - ■■ P1**
1 878	0.77	5 000	27 000	-	1.24	759465355/404352	✓	✓	✓	✓	✓	✓	✓		**2KJ3237 - ■■■■■ - ■■ N1**
1 598	0.91	5 000	27 000	-	1.53	13808461/8640	✓	✓	✓	✓	✓	✓	✓		**2KJ3237 - ■■■■■ - ■■ M1**
1 369	1.1	5 000	27 000	-	1.89	676614589/494208			✓	✓	✓	✓	✓		**2KJ3237 - ■■■■■ - ■■ L1**
1 204	1.2	5 000	27 000	-	2.3	648997667/539136			✓	✓	✓	✓	✓		**2KJ3237 - ■■■■■ - ■■ K1**
1 016	1.4	5 000	27 000	-	2.9	262360759/258336			✓	✓	✓	✓	✓		**2KJ3237 - ■■■■■ - ■■ J1**
885	1.6	5 000	27 000	-	3.9	13808461/15600			✓	✓	✓	✓	✓		**2KJ3237 - ■■■■■ - ■■ H1**
873	1.7	5 000	27 000	-	1.51	208411423/238680	✓	✓	✓	✓	✓	✓	✓		**2KJ3237 - ■■■■■ - ■■ G1**
825	1.8	5 000	27 000	-	1.71	208411423/252720	✓	✓	✓	✓	✓	✓	✓		**2KJ3237 - ■■■■■ - ■■ F1**
702	2.1	5 000	27 000	-	2.2	18946493/27000	✓	✓	✓	✓	✓	✓	✓		**2KJ3237 - ■■■■■ - ■■ E1**
601	2.4	5 000	27 000	-	2.8	928378157/1544400			✓	✓	✓	✓	✓		**2KJ3237 - ■■■■■ - ■■ D1**
529	2.7	5 000	27 000	-	3.4	890485171/1684800			✓	✓	✓	✓	✓		**2KJ3237 - ■■■■■ - ■■ C1**
446	3.3	5 000	27 000	-	4.5	359983367/807300			✓	✓	✓	✓	✓		**2KJ3237 - ■■■■■ - ■■ B1**
389	3.7	5 000	27 000	-	6	18946493/48750			✓	✓	✓	✓	✓		**2KJ3237 - ■■■■■ - ■■ A1**

[1] Only in conjunction with reduced-backlash version

© Siemens AG 2017

Selection and ordering data (continued)

i	n_2	T_{2N}	F_{R2}	φ[1]	J_G	R_{ex}	Motor frame size								Article No.
-	rpm	Nm	N	'	10^{-4} kgm²	-	63	71	80	90	100	112	132	160	
D.149-D49															
24 180	0.06	8 000	51 200	-	0.08	118481211/4900	✓	✓							**2KJ3241 - ■■■■■ - ■■ N1**
21 982	0.07	8 000	51 200	-	0.10	118481211/5390	✓	✓	✓	✓					**2KJ3241 - ■■■■■ - ■■ M1**
18 807	0.08	8 000	51 200	-	0.12	13164579/700	✓	✓	✓	✓					**2KJ3241 - ■■■■■ - ■■ L1**
17 097	0.08	8 000	51 200	-	0.14	13164579/770	✓	✓	✓	✓					**2KJ3241 - ■■■■■ - ■■ K1**
15 112	0.10	8 000	51 200	-	0.17	118481211/7840	✓	✓	✓	✓	✓	✓			**2KJ3241 - ■■■■■ - ■■ J1**
13 739	0.11	8 000	51 200	-	0.22	118481211/8624	✓	✓	✓	✓	✓	✓			**2KJ3241 - ■■■■■ - ■■ H1**
12 034	0.12	8 000	51 200	-	0.26	188692299/15680	✓	✓	✓	✓	✓	✓			**2KJ3241 - ■■■■■ - ■■ G1**
11 108	0.13	8 000	51 200	-	0.31	566076897/50960	✓	✓	✓	✓	✓	✓			**2KJ3241 - ■■■■■ - ■■ F1**
9 835	0.15	8 000	51 200	-	0.37	539747739/54880	✓	✓	✓	✓	✓	✓	✓		**2KJ3241 - ■■■■■ - ■■ E1**
8 186	0.18	8 000	51 200	-	0.50	513418581/62720	✓	✓	✓	✓	✓	✓	✓		**2KJ3241 - ■■■■■ - ■■ D1**
7 704	0.19	8 000	51 200	-	0.59	30201093/3920	✓	✓	✓	✓	✓	✓	✓		**2KJ3241 - ■■■■■ - ■■ C1**
6 903	0.21	8 000	51 200	-	0.66	54121047/7840	✓	✓	✓	✓	✓	✓	✓		**2KJ3241 - ■■■■■ - ■■ B1**
5 877	0.25	8 000	51 200	-	0.86	13164579/2240	✓	✓	✓	✓	✓	✓	✓		**2KJ3241 - ■■■■■ - ■■ A1**
D.149-Z49															
5 749	0.25	8 000	51 200	-	0.18	225346617/39200	✓	✓	✓	✓					**2KJ3240 - ■■■■■ - ■■ B2**
5 226	0.28	8 000	51 200	-	0.22	225346617/43120	✓	✓	✓	✓					**2KJ3240 - ■■■■■ - ■■ A2**
4 445	0.33	8 000	51 200	-	0.28	6969483/1568	✓	✓	✓	✓					**2KJ3240 - ■■■■■ - ■■ X1**
4 041	0.36	8 000	51 200	-	0.34	34847415/8624	✓	✓	✓	✓					**2KJ3240 - ■■■■■ - ■■ W1**
3 605	0.4	8 000	51 200	-	0.39	56530251/15680	✓	✓	✓	✓	✓	✓			**2KJ3240 - ■■■■■ - ■■ V1**
3 233	0.45	8 000	51 200	-	0.47	6969483/2156	✓	✓	✓	✓	✓	✓			**2KJ3240 - ■■■■■ - ■■ U1**
2 914	0.5	8 000	51 200	-	0.55	45688833/15680	✓	✓	✓	✓	✓	✓			**2KJ3240 - ■■■■■ - ■■ T1**
2 690	0.54	8 000	51 200	-	0.66	137066499/50960	✓	✓	✓	✓	✓	✓			**2KJ3240 - ■■■■■ - ■■ S1**
2 455	0.59	8 000	51 200	-	0.78	67371669/27440	✓	✓	✓	✓	✓	✓	✓		**2KJ3240 - ■■■■■ - ■■ R1**
2 037	0.71	8 000	51 200	-	1.0	25554771/12544	✓	✓	✓	✓	✓	✓	✓		**2KJ3240 - ■■■■■ - ■■ Q1**
1 917	0.76	8 000	51 200	-	1.16	25554771/13328	✓	✓	✓	✓	✓	✓	✓		**2KJ3240 - ■■■■■ - ■■ P1**
1 811	0.80	8 000	51 200	-	1.31	2839419/1568	✓	✓	✓	✓	✓	✓	✓		**2KJ3240 - ■■■■■ - ■■ N1**
1 541	0.94	8 000	51 200	-	1.62	30201093/19600	✓	✓	✓	✓	✓	✓	✓		**2KJ3240 - ■■■■■ - ■■ M1**
1 320	1.1	8 000	51 200	-	2.0	2323161/1760			✓	✓	✓	✓	✓		**2KJ3240 - ■■■■■ - ■■ L1**
1 161	1.2	8 000	51 200	-	2.5	36396189/31360			✓	✓	✓	✓	✓		**2KJ3240 - ■■■■■ - ■■ K1**
979	1.5	8 000	51 200	-	3.2	1919133/1960			✓	✓	✓	✓	✓		**2KJ3240 - ■■■■■ - ■■ J1**
853	1.7	8 000	51 200	-	4.2	20908449/24500			✓	✓	✓	✓	✓		**2KJ3240 - ■■■■■ - ■■ H1**
842	1.7	8 000	51 200	-	1.81	35063523/41650	✓	✓	✓	✓	✓	✓	✓		**2KJ3240 - ■■■■■ - ■■ G1**
795	1.8	8 000	51 200	-	2.0	3895947/4900	✓	✓	✓	✓	✓	✓	✓		**2KJ3240 - ■■■■■ - ■■ F1**
677	2.1	8 000	51 200	-	2.6	41438709/61250	✓	✓	✓	✓	✓	✓	✓		**2KJ3240 - ■■■■■ - ■■ E1**
580	2.5	8 000	51 200	-	3.4	3187593/5500			✓	✓	✓	✓	✓		**2KJ3240 - ■■■■■ - ■■ D1**
510	2.8	8 000	51 200	-	4.3	49938957/98000			✓	✓	✓	✓	✓		**2KJ3240 - ■■■■■ - ■■ C1**
430	3.4	8 000	51 200	-	5.7	2633229/6125			✓	✓	✓	✓	✓		**2KJ3240 - ■■■■■ - ■■ B1**
375	3.9	8 000	51 200	-	7.5	57376674/153125			✓	✓	✓	✓	✓		**2KJ3240 - ■■■■■ - ■■ A1**

[1] Only in conjunction with reduced-backlash version

© Siemens AG 2017

3

Selection and ordering data (continued)

i	n_2	T_{2N}	F_{R2}	φ [1]	J_G	R_{ex}	Motor frame size								Article No.
-	rpm	Nm	N	'	10^{-4} kgm²	-	63	71	80	90	100	112	132	160	
D.169-D69															
23 323	0.06	14 000	70 100	-	0.08	28571136/1225	✓	✓	✓	✓					**2KJ3243 - ■■■■■ - ■■ N1**
21 203	0.07	14 000	70 100	-	0.10	5194752/245	✓	✓	✓	✓					**2KJ3243 - ■■■■■ - ■■ M1**
18 140	0.08	14 000	70 100	-	0.12	9523712/525	✓	✓	✓	✓					**2KJ3243 - ■■■■■ - ■■ L1**
16 491	0.09	14 000	70 100	-	0.15	1731584/105	✓	✓	✓	✓					**2KJ3243 - ■■■■■ - ■■ K1**
14 577	0.10	14 000	70 100	-	0.17	3571392/245	✓	✓	✓	✓	✓	✓			**2KJ3243 - ■■■■■ - ■■ J1**
13 252	0.11	14 000	70 100	-	0.23	649344/49	✓	✓	✓	✓	✓	✓			**2KJ3243 - ■■■■■ - ■■ H1**
11 608	0.12	14 000	70 100	-	0.26	25594976/2205	✓	✓	✓	✓	✓	✓			**2KJ3243 - ■■■■■ - ■■ G1**
10 715	0.14	14 000	70 100	-	0.32	102379904/9555	✓	✓	✓	✓	✓	✓			**2KJ3243 - ■■■■■ - ■■ F1**
9 487	0.15	14 000	70 100	-	0.39	48809024/5145	✓	✓	✓	✓	✓	✓	✓		**2KJ3243 - ■■■■■ - ■■ E1**
7 896	0.18	14 000	70 100	-	0.52	1934504/245	✓	✓	✓	✓	✓	✓	✓		**2KJ3243 - ■■■■■ - ■■ D1**
7 431	0.2	14 000	70 100	-	0.61	30952064/4165	✓	✓	✓	✓	✓	✓	✓		**2KJ3243 - ■■■■■ - ■■ C1**
6 659	0.22	14 000	70 100	-	0.68	44047168/6615	✓	✓	✓	✓	✓	✓	✓		**2KJ3243 - ■■■■■ - ■■ B1**
5 669	0.26	14 000	70 100	-	0.89	595232/105	✓	✓	✓	✓	✓	✓	✓		**2KJ3243 - ■■■■■ - ■■ A1**
D.169-Z.69															
5 545	0.26	14 000	70 100	-	0.21	115475008/20825	✓	✓	✓	✓					**2KJ3242 - ■■■■■ - ■■ A2**
5 041	0.29	14 000	70 100	-	0.26	20995456/4165	✓	✓	✓	✓					**2KJ3242 - ■■■■■ - ■■ X1**
4 287	0.34	14 000	70 100	-	0.33	3571392/833	✓	✓	✓	✓					**2KJ3242 - ■■■■■ - ■■ W1**
3 898	0.37	14 000	70 100	-	0.40	3246720/833	✓	✓	✓	✓					**2KJ3242 - ■■■■■ - ■■ V1**
3 478	0.42	14 000	70 100	-	0.47	43451936/12495	✓	✓	✓	✓	✓	✓			**2KJ3242 - ■■■■■ - ■■ U1**
3 118	0.47	14 000	70 100	-	0.57	2597376/833	✓	✓	✓	✓	✓	✓			**2KJ3242 - ■■■■■ - ■■ T1**
2 811	0.52	14 000	70 100	-	0.67	35118688/12495	✓	✓	✓	✓	✓	✓			**2KJ3242 - ■■■■■ - ■■ S1**
2 594	0.56	14 000	70 100	-	0.8	140474752/54145	✓	✓	✓	✓	✓	✓			**2KJ3242 - ■■■■■ - ■■ R1**
2 368	0.61	14 000	70 100	-	0.95	69046912/29155	✓	✓	✓	✓	✓	✓	✓		**2KJ3242 - ■■■■■ - ■■ Q1**
1 965	0.74	14 000	70 100	-	1.25	1636888/833	✓	✓	✓	✓	✓	✓	✓		**2KJ3242 - ■■■■■ - ■■ P1**
1 849	0.78	14 000	70 100	-	1.44	26190208/14161	✓	✓	✓	✓	✓	✓	✓		**2KJ3242 - ■■■■■ - ■■ N1**
1 747	0.83	14 000	70 100	-	1.62	13095104/7497	✓	✓	✓	✓	✓	✓	✓		**2KJ3242 - ■■■■■ - ■■ M1**
1 486	0.98	14 000	70 100	-	2.1	30952064/20825	✓	✓	✓	✓	✓	✓	✓		**2KJ3242 - ■■■■■ - ■■ L1**
1 273	1.1	14 000	70 100	-	2.6	108224/85	✓	✓	✓	✓	✓	✓	✓		**2KJ3242 - ■■■■■ - ■■ K1**
1 119	1.3	14 000	70 100	-	3.2	13987952/12495	✓	✓	✓	✓	✓	✓	✓		**2KJ3242 - ■■■■■ - ■■ J1**
944	1.5	14 000	70 100	-	4.2	90475264/95795			✓	✓	✓	✓	✓		**2KJ3242 - ■■■■■ - ■■ H1**
823	1.8	14 000	70 100	-	5.7	85713408/104125			✓	✓	✓	✓	✓		**2KJ3242 - ■■■■■ - ■■ G1**
773	1.9	14 000	70 100	-	3.2	19047424/24633			✓	✓	✓	✓	✓		**2KJ3242 - ■■■■■ - ■■ F1**
658	2.2	14 000	70 100	-	4.3	45021184/68425			✓	✓	✓	✓	✓		**2KJ3242 - ■■■■■ - ■■ E1**
564	2.6	14 000	70 100	-	5.6	12121088/21505	✓	✓	✓	✓	✓	✓	✓		**2KJ3242 - ■■■■■ - ■■ D1**
496	2.9	14 000	70 100	-	7.1	20346112/41055	✓	✓	✓	✓	✓	✓	✓		**2KJ3242 - ■■■■■ - ■■ C1**
418	3.5	14 000	70 100	-	9.7	131600384/314755			✓	✓	✓	✓	✓		**2KJ3242 - ■■■■■ - ■■ B1**
364	4.0	14 000	70 100	-	13	124674048/342125			✓	✓	✓	✓	✓		**2KJ3242 - ■■■■■ - ■■ A1**

[1] Only in conjunction with reduced-backlash version

© Siemens AG 2017

Selection and ordering data (continued)

i	n_2	T_{2N}	F_{R2}	φ [1]	J_G	R_{ex}	Motor frame size								Article No.
-	rpm	Nm	N	'	10^{-4} kgm²	-	63	71	80	90	100	112	132	160	
D.189-D69															
27 816	0.05	19 000	107 000	-	0.07	15994264/575	✓	✓	✓	✓					**2KJ3245 - ■■■■■ - ■■ P1**
24 424	0.06	19 000	107 000	-	0.09	14043744/575	✓	✓	✓	✓					**2KJ3245 - ■■■■■ - ■■ N1**
22 204	0.07	19 000	107 000	-	0.11	2553408/115	✓	✓	✓	✓					**2KJ3245 - ■■■■■ - ■■ M1**
18 996	0.08	19 000	107 000	-	0.12	10922912/575	✓	✓	✓	✓					**2KJ3245 - ■■■■■ - ■■ L1**
17 269	0.08	19 000	107 000	-	0.15	1985984/115	✓	✓	✓	✓					**2KJ3245 - ■■■■■ - ■■ K1**
15 265	0.09	19 000	107 000	-	0.18	1755468/115	✓	✓	✓	✓	✓	✓			**2KJ3245 - ■■■■■ - ■■ J1**
13 877	0.1	19 000	107 000	-	0.23	319176/23	✓	✓	✓	✓	✓	✓			**2KJ3245 - ■■■■■ - ■■ H1**
12 155	0.12	19 000	107 000	-	0.27	4193618/345	✓	✓	✓	✓	✓	✓			**2KJ3245 - ■■■■■ - ■■ G1**
11 220	0.13	19 000	107 000	-	0.32	1290344/115	✓	✓	✓	✓	✓	✓			**2KJ3245 - ■■■■■ - ■■ F1**
9 934	0.15	19 000	107 000	-	0.39	7997132/805	✓	✓	✓	✓	✓	✓	✓		**2KJ3245 - ■■■■■ - ■■ E1**
8 269	0.18	19 000	107 000	-	0.53	1901757/230	✓	✓	✓	✓	✓	✓	✓		**2KJ3245 - ■■■■■ - ■■ D1**
7 782	0.19	19 000	107 000	-	0.62	15214056/1955	✓	✓	✓	✓	✓	✓	✓		**2KJ3245 - ■■■■■ - ■■ C1**
6 973	0.21	19 000	107 000	-	0.69	7216924/1035	✓	✓	✓	✓	✓	✓	✓		**2KJ3245 - ■■■■■ - ■■ B1**
5 936	0.24	19 000	107 000	-	0.91	682682/115	✓	✓	✓	✓	✓	✓	✓		**2KJ3245 - ■■■■■ - ■■ A1**
D.189-Z69															
5 807	0.25	19 000	107 000	-	0.24	56760132/9775	✓	✓	✓	✓					**2KJ3244 - ■■■■■ - ■■ A2**
5 279	0.27	19 000	107 000	-	0.29	10320024/1955	✓	✓	✓	✓					**2KJ3244 - ■■■■■ - ■■ X1**
4 490	0.32	19 000	107 000	-	0.37	1755468/391	✓	✓	✓	✓					**2KJ3244 - ■■■■■ - ■■ W1**
4 082	0.36	19 000	107 000	-	0.45	1595880/391	✓	✓	✓	✓					**2KJ3244 - ■■■■■ - ■■ V1**
3 642	0.4	19 000	107 000	-	0.53	7119398/1955	✓	✓	✓	✓	✓	✓			**2KJ3244 - ■■■■■ - ■■ U1**
3 265	0.44	19 000	107 000	-	0.64	1276704/391	✓	✓	✓	✓	✓	✓			**2KJ3244 - ■■■■■ - ■■ T1**
2 943	0.49	19 000	107 000	-	0.77	5754034/1955	✓	✓	✓	✓	✓	✓			**2KJ3244 - ■■■■■ - ■■ S1**
2 717	0.53	19 000	107 000	-	0.91	5311416/1955	✓	✓	✓	✓	✓	✓			**2KJ3244 - ■■■■■ - ■■ R1**
2 480	0.58	19 000	107 000	-	1.08	33939048/13685	✓	✓	✓	✓	✓	✓	✓		**2KJ3244 - ■■■■■ - ■■ Q1**
2 058	0.7	19 000	107 000	-	1.45	1609179/782	✓	✓	✓	✓	✓	✓	✓		**2KJ3244 - ■■■■■ - ■■ P1**
1 937	0.75	19 000	107 000	-	1.65	12873432/6647	✓	✓	✓	✓	✓	✓	✓		**2KJ3244 - ■■■■■ - ■■ N1**
1 829	0.79	19 000	107 000	-	1.87	2145572/1173	✓	✓	✓	✓	✓	✓	✓		**2KJ3244 - ■■■■■ - ■■ M1**
1 556	0.93	19 000	107 000	-	2.4	15214056/9775	✓	✓	✓	✓	✓	✓	✓		**2KJ3244 - ■■■■■ - ■■ L1**
1 333	1.1	19 000	107 000	-	3.1	2606604/1955			✓	✓	✓	✓	✓		**2KJ3244 - ■■■■■ - ■■ K1**
1 172	1.2	19 000	107 000	-	3.8	2291861/1955			✓	✓	✓	✓	✓		**2KJ3244 - ■■■■■ - ■■ J1**
989	1.5	19 000	107 000	-	5.1	44471856/44965			✓	✓	✓	✓	✓		**2KJ3244 - ■■■■■ - ■■ H1**
862	1.7	19 000	107 000	-	6.8	42131232/48875			✓	✓	✓	✓	✓		**2KJ3244 - ■■■■■ - ■■ G1**
810	1.8	19 000	107 000	-	4.5	21845824/26979	✓	✓	✓	✓	✓	✓	✓		**2KJ3244 - ■■■■■ - ■■ F1**
689	2.1	19 000	107 000	-	6	154906752/224825	✓	✓	✓	✓	✓	✓	✓		**2KJ3244 - ■■■■■ - ■■ E1**
590	2.5	19 000	107 000	-	8	26539968/44965			✓	✓	✓	✓	✓		**2KJ3244 - ■■■■■ - ■■ D1**
519	2.8	19 000	107 000	-	10	23335312/44965			✓	✓	✓	✓	✓		**2KJ3244 - ■■■■■ - ■■ C1**
438	3.3	19 000	107 000	-	14	452804352/1034195			✓	✓	✓	✓	✓		**2KJ3244 - ■■■■■ - ■■ B1**
382	3.8	19 000	107 000	-	18	428972544/1124125			✓	✓	✓	✓	✓		**2KJ3244 - ■■■■■ - ■■ A1**

[1] Only in conjunction with reduced-backlash version

© Siemens AG 2017

Dimensions

Dimensional drawing overview

Information about dimensional drawings can be found in chapter Introduction on page 1/21.

Design	Size	Dimensional drawing on page
Helical geared motor Z and D		
Foot-mounted design		
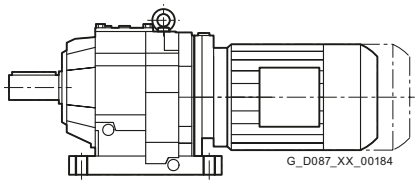 G_D087_XX_00184	D/Z19	3/104
	D/Z29	3/107
	D/Z39	3/111
	D/Z49	3/115
	D/Z59	3/118
	D/Z69	3/121
	D/Z79	3/124
	D/Z89	3/127
	D/Z109	3/130
	D/Z129	3/133
	D/Z149	3/136
	D/Z169	3/138
	D/Z189	3/140
Foot/flange-mounted design		
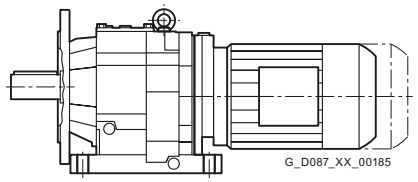 G_D087_XX_00185	DB/ZB29	3/108
	DB/ZB39	3/112
	DB/ZB49	3/115
	DB/ZB59	3/118
	DB/ZB69	3/121
	DB/ZB79	3/124
	DB/ZB89	3/127
Flange-mounted design		
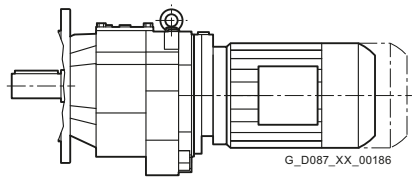 G_D087_XX_00186	DF/ZF19	3/105
	DF/ZF29	3/109
	DF/ZF39	3/113
	DF/ZF49	3/116
	DF/ZF59	3/119
	DF/ZF69	3/122
	DF/ZF79	3/125
	DF/ZF89	3/128
	DF/ZF109	3/131
	DF/ZF129	3/134
	DF/ZF149	3/137
	DF/ZF169	3/139
	DF/ZF189	3/141
Housing flange design		
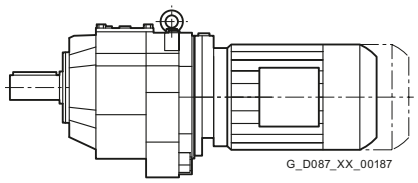 G_D087_XX_00187	DZ/ZZ19	3/106
	DZ/ZZ29	3/110
	DZ/ZZ39	3/114
	DZ/ZZ49	3/117
	DZ/ZZ59	3/120
	DZ/ZZ69	3/123
	DZ/ZZ79	3/126
	DZ/ZZ89	3/129
	DZ/ZZ109	3/132
	DZ/ZZ129	3/135

© Siemens AG 2017

Dimensional drawing overview (continued)

Design	Size / description	Dimensional drawing on page
Helical geared motor E		
Foot-mounted design		
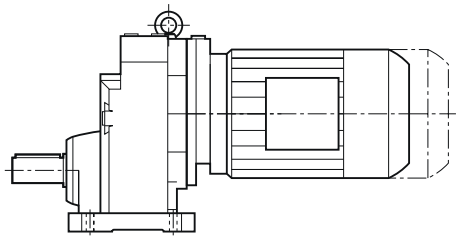	E39	3/142
	E49	3/145
	E69	3/148
	E89	3/151
	E109	3/154
	E129	3/157
	E149	3/160
Flange-mounted design		
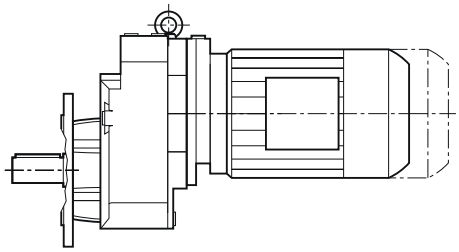	EF39	3/143
	EF49	3/146
	EF69	3/149
	EF89	3/152
	EF109	3/155
	EF129	3/158
	EF149	3/161
Housing flange design		
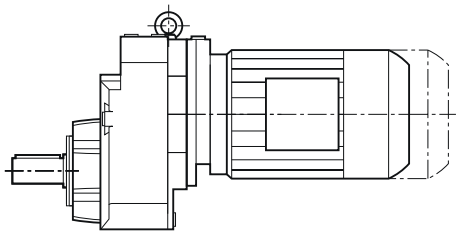	EZ39	3/144
	EZ49	3/147
	EZ69	3/150
	EZ89	3/153
	EZ109	3/156
	EZ129	3/159
	EZ149	3/162
Helical tandem geared motor		
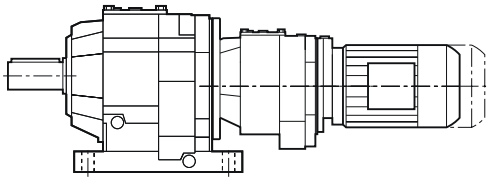	D./Z.29-D/Z19 ... D.189-D/Z69	3/163
Additional versions and options		
Inner contour of the flange design		
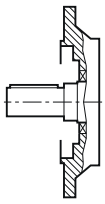	DF/ZF19 ... DF/ZF189	3/164
	EF39 ... EF149	3/165

© Siemens AG 2017

3

D/Z19 gearbox in a foot-mounted design

DZ030

D/Z19

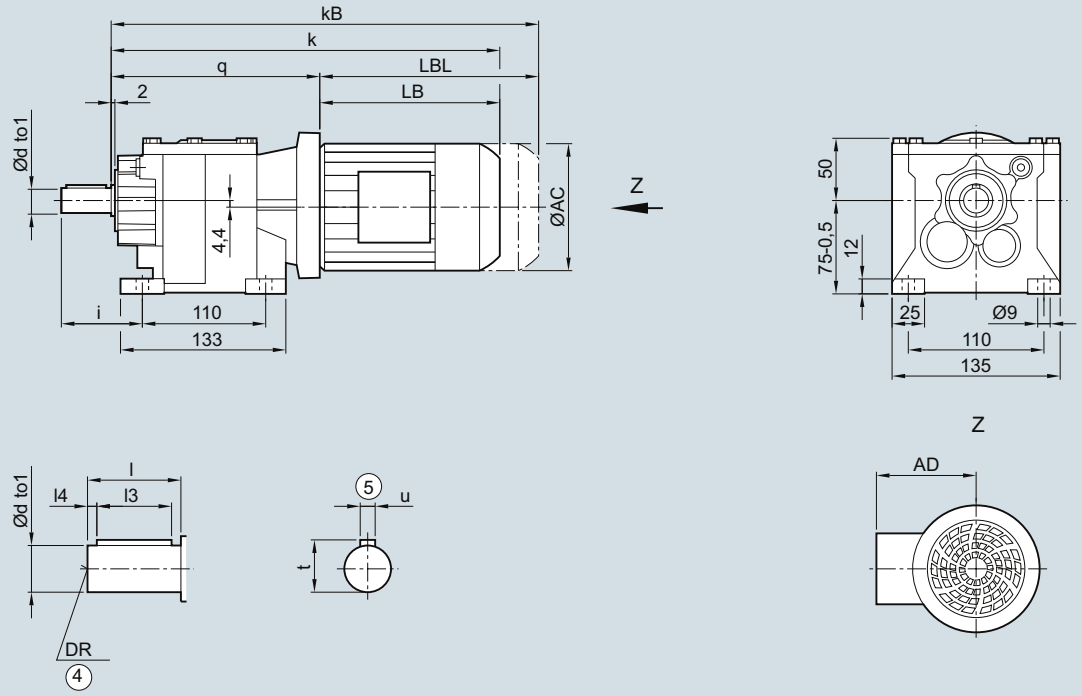

Shaft	d	to1	l	l3	l4	t	u	i	DR
	16	k6	28	22	3	18.0	5	46	M5
	16	k6	40	32	4	18.0	5	58	M8
	20	k6	40	32	4	22.5	6	58	M6x16

Motor	LA 63	71	71Z	LE 80	80Z
q	159.5	167.5	167.5	168.0	168.0
AC	117.8	138.8	138.8	156.3	156.3
AD[1)]	124.0	134.0	134.0	149.2	149.2
k	320.0	352.0	371.0	408.0	443.0
kB	364.5	407.0	426.0	468.0	503.0
LB	160.5	184.5	203.5	240.0	275.0
LBL	205.0	239.5	258.5	300.0	335.0

④ DIN 332
⑤ Feather key/keyway DIN 6885-1
1) AD depends on the motor options, for other dimensions see page 8/36.

© Siemens AG 2017

DF/ZF19 gearbox in a flange-mounted design

DZF030

DF/ZF19

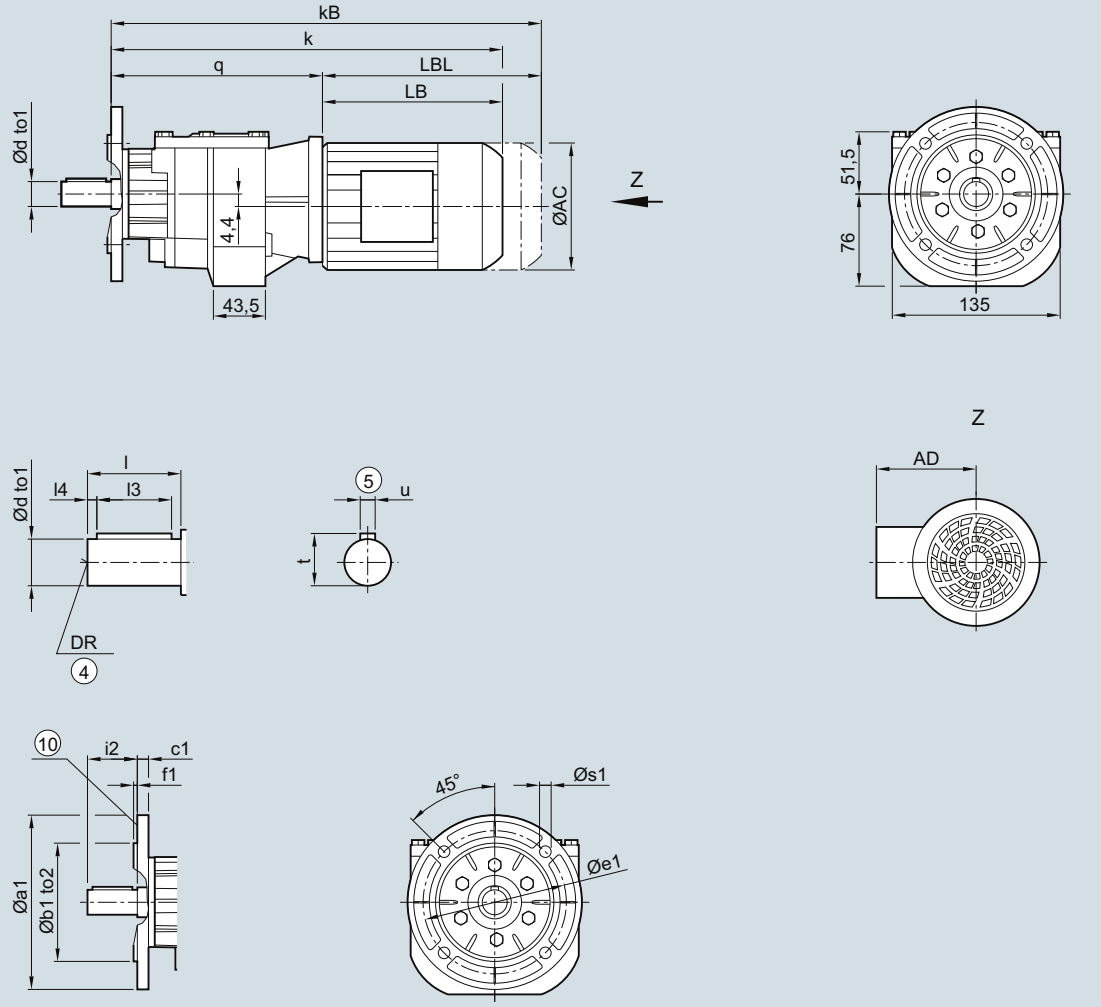

Flange	a1	b1	to2	c1	e1	f1	s1
	120	80	j6	8	100	3.0	6.6
	140	95	j6	9	115	3.0	9.0
	160	110	j6	9	130	3.5	9.0

Shaft	d	to1	l	l3	l4	t	u	i2	DR
	16	k6	28	22	3	18.0	5	28	M5
	16	k6	40	32	4	18.0	5	40	M8
	20	k6	40	32	4	22.5	6	40	M6x16

Motor	LA			LE	
	63	71	71Z	80	80Z
q	168.5	176.5	176.5	177.0	177.0
AC	117.8	138.8	138.8	156.3	156.3
AD[1)]	124.0	134.0	134.0	149.2	149.2
k	329.0	361.0	380.0	417.0	452.0
kB	373.5	416.0	435.0	477.0	512.0
LB	160.5	184.5	203.5	240.0	275.0
LBL	205.0	239.5	258.5	300.0	335.0

④ DIN 332
1) AD depends on the motor options, for other dimensions see page 8/36.
⑤ Feather key/keyway DIN 6885-1
⑩ For inner contour see page 3/164

© Siemens AG 2017

DZ/ZZ19 gearbox in a housing flange design

DZZ030

DZ/ZZ19

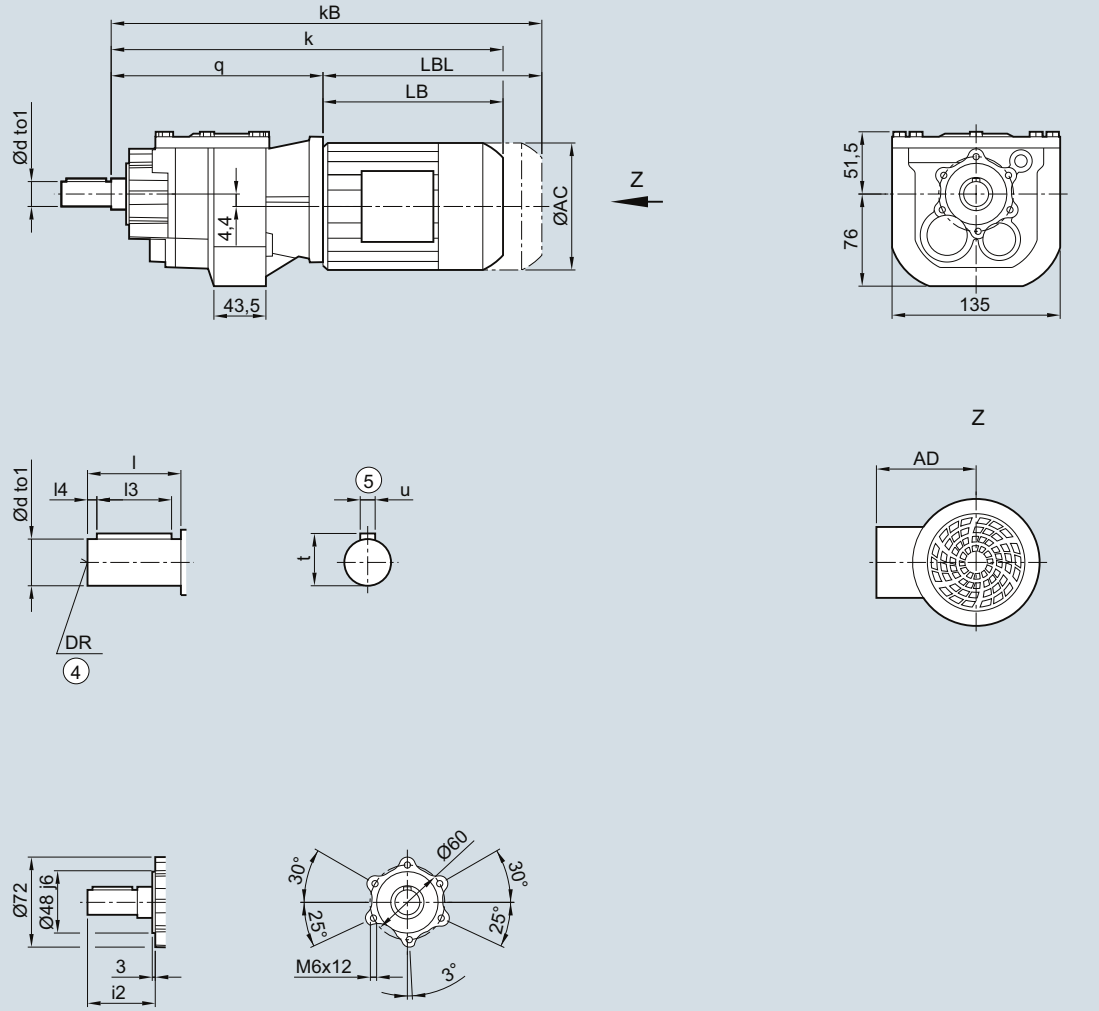

Shaft	d	to1	l	l3	l4	t	u	i2	DR
	16	k6	28	22	3	18.0	5	42	M5
	16	k6	40	32	4	18.0	5	54	M8
	20	k6	40	32	4	22.5	6	54	M6x16

Motor	LA			LE	
	63	71	71Z	80	80Z
q	168.5	176.5	176.5	177.0	177.0
AC	117.8	138.8	138.8	156.3	156.3
AD[1)]	124.0	134.0	134.0	149.2	149.2
k	329.0	361.0	380.0	417.0	452.0
kB	373.5	416.0	435.0	477.0	512.0
LB	160.5	184.5	203.5	240.0	275.0
LBL	205.0	239.5	258.5	300.0	335.0

④ DIN 332

⑤ Feather key/keyway DIN 6885-1

1) AD depends on the motor options, for other dimensions see page 8/36.

© Siemens AG 2017

D/Z29 gearbox in a foot-mounted design

DZ030

D/Z29

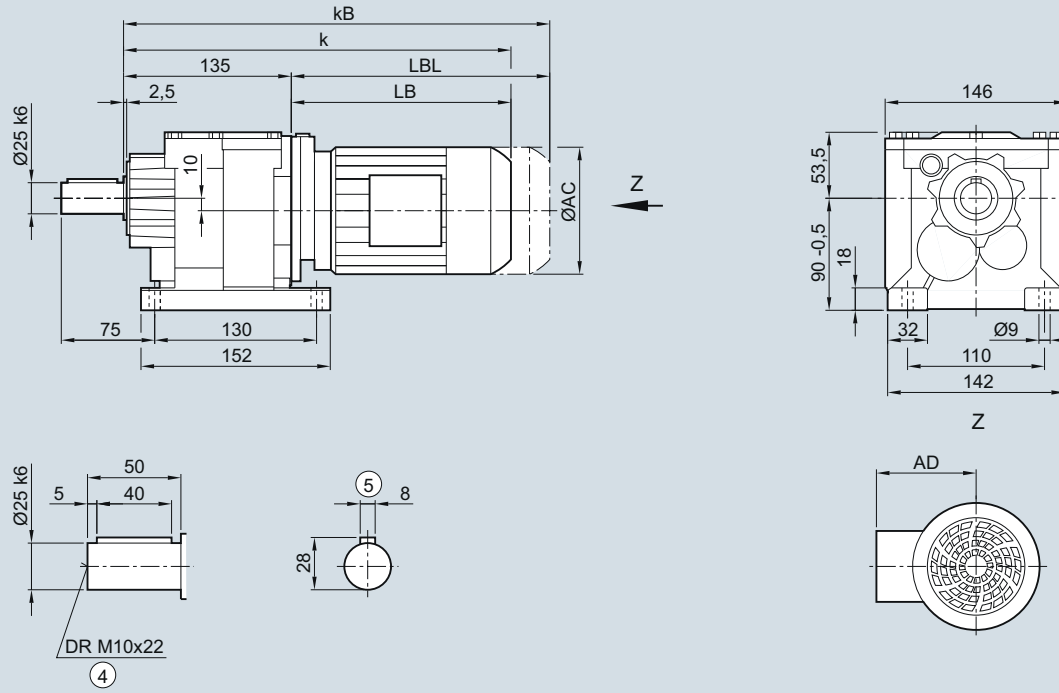

Motor	LA			LE					
	63	71	71Z	80	80Z	90	90Z	100	100Z
AC	117.8	138.8	138.8	156.3	156.3	173.8	173.8	198.0	198.0
AD[1)]	124.0	134.0	134.0	149.2	149.2	154.2	154.2	170.5	170.5
k	329.0	361.0	380.0	425.0	460.0	486.5	526.5	543.0	578.0
kB	373.5	416.0	435.0	485.0	520.0	556.5	596.5	621.5	656.5
LB	194.0	226.0	245.0	290.0	325.0	351.5	391.5	408.0	443.0
LBL	238.5	281.0	300.0	350.0	385.0	421.5	461.5	486.5	521.5

④ DIN 332

⑤ Feather key/keyway DIN 6885-1

1) AD depends on the motor options, for other dimensions see page 8/36.

© Siemens AG 2017

3

DB/ZB29 gearbox in a foot/flange-mounted design

DZB030

DB/ZB29

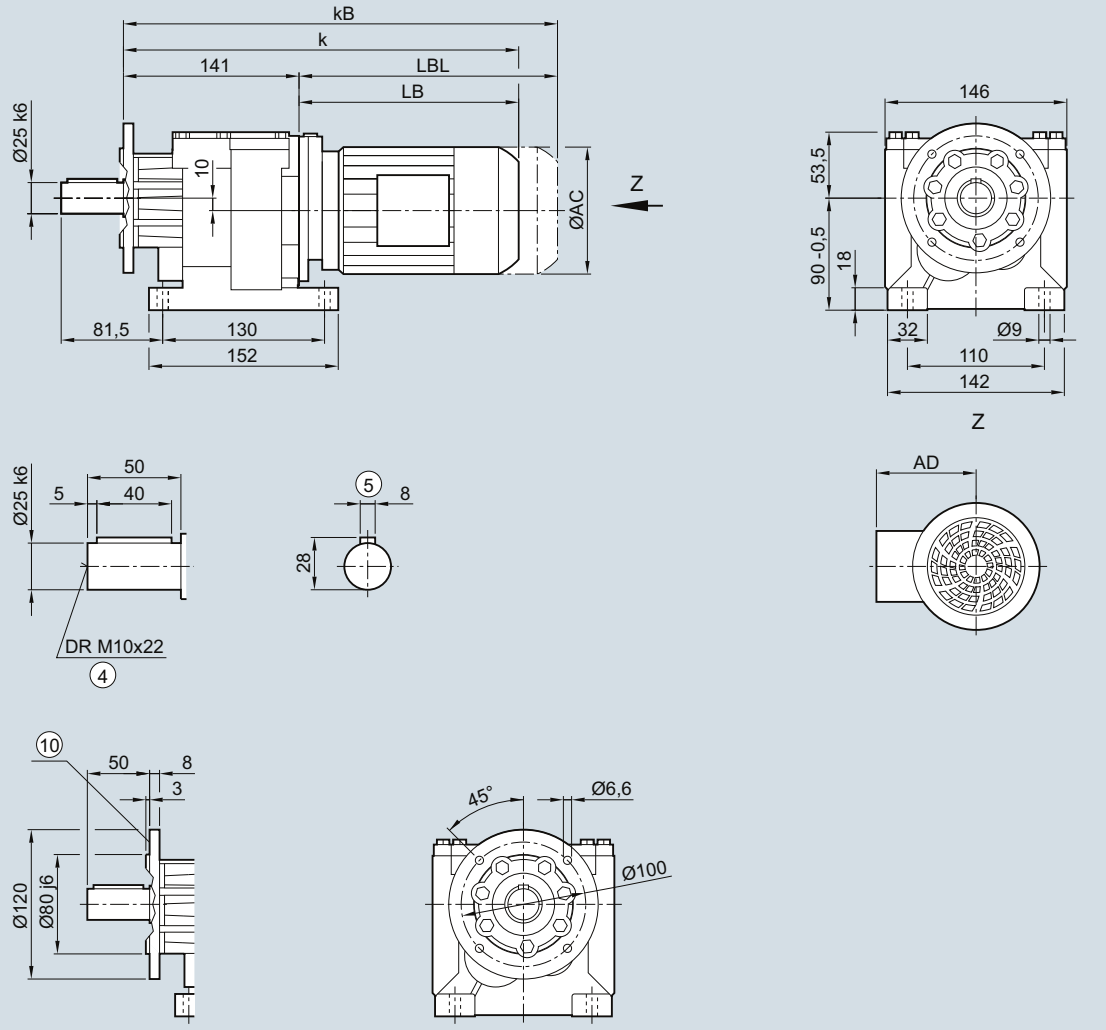

Motor	LA			LE					
	63	71	71Z	80	80Z	90	90Z	100	100Z
AC	117.8	138.8	138.8	156.3	156.3	173.8	173.8	198.0	198.0
AD[1)]	124.0	134.0	134.0	149.2	149.2	154.2	154.2	170.5	170.5
k	335.0	367.0	386.0	431.0	466.0	492.5	532.5	549.0	584.0
kB	379.5	422.0	441.0	491.0	526.0	562.5	602.5	627.5	662.5
LB	194.0	226.0	245.0	290.0	325.0	351.5	391.5	408.0	443.0
LBL	238.5	281.0	300.0	350.0	385.0	421.5	461.5	486.5	521.5

④ DIN 332
⑤ Feather key/keyway DIN 6885-1
1) AD depends on the motor options, for other dimensions see page 8/36.
⑩ For inner contour see page 3/164

© Siemens AG 2017

DF/ZF29 gearbox in a flange-mounted design

DZF030

DF/ZF29

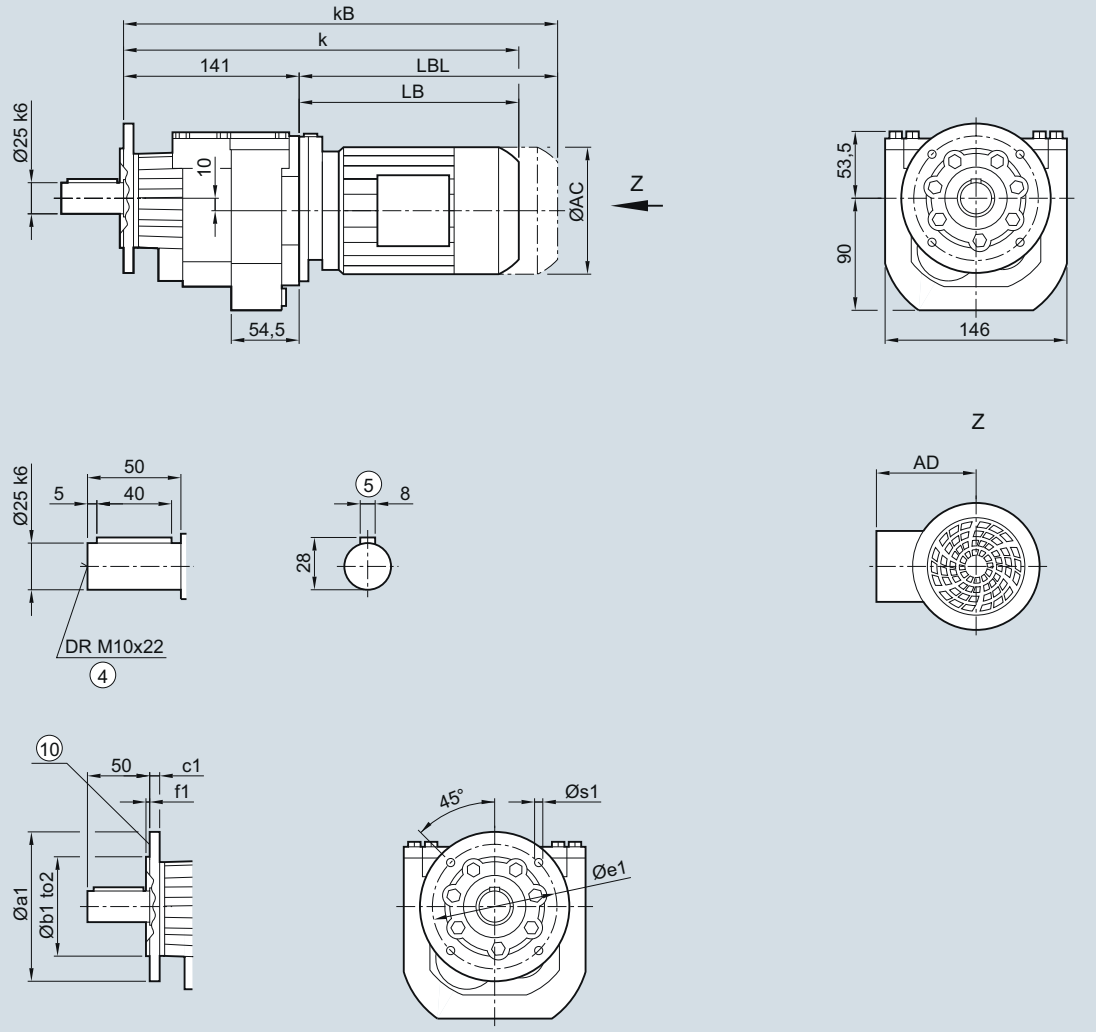

Flange	a1	b1	to2	c1	e1	f1	s1
	120	80	j6	8	100	3.0	6.6
	140	95	j6	9	115	3.0	9.0
	160	110	j6	9	130	3.5	9.0

Motor	LA			LE					
	63	71	71Z	80	80Z	90	90Z	100	100Z
AC	117.8	138.8	138.8	156.3	156.3	173.8	173.8	198.0	198.0
AD[1)]	124.0	134.0	134.0	149.2	149.2	154.2	154.2	170.5	170.5
k	335.0	367.0	386.0	431.0	466.0	492.5	532.5	549.0	584.0
kB	379.5	422.0	441.0	491.0	526.0	562.5	602.5	627.5	662.5
LB	194.0	226.0	245.0	290.0	325.0	351.5	391.5	408.0	443.0
LBL	238.5	281.0	300.0	350.0	385.0	421.5	461.5	486.5	521.5

④ DIN 332
1) AD depends on the motor options, for other dimensions see page 8/36.
⑤ Feather key/keyway DIN 6885-1
⑩ For inner contour see page 3/164

© Siemens AG 2017

DZ/ZZ29 gearbox in a housing flange design

DZZ030

DZ/ZZ29

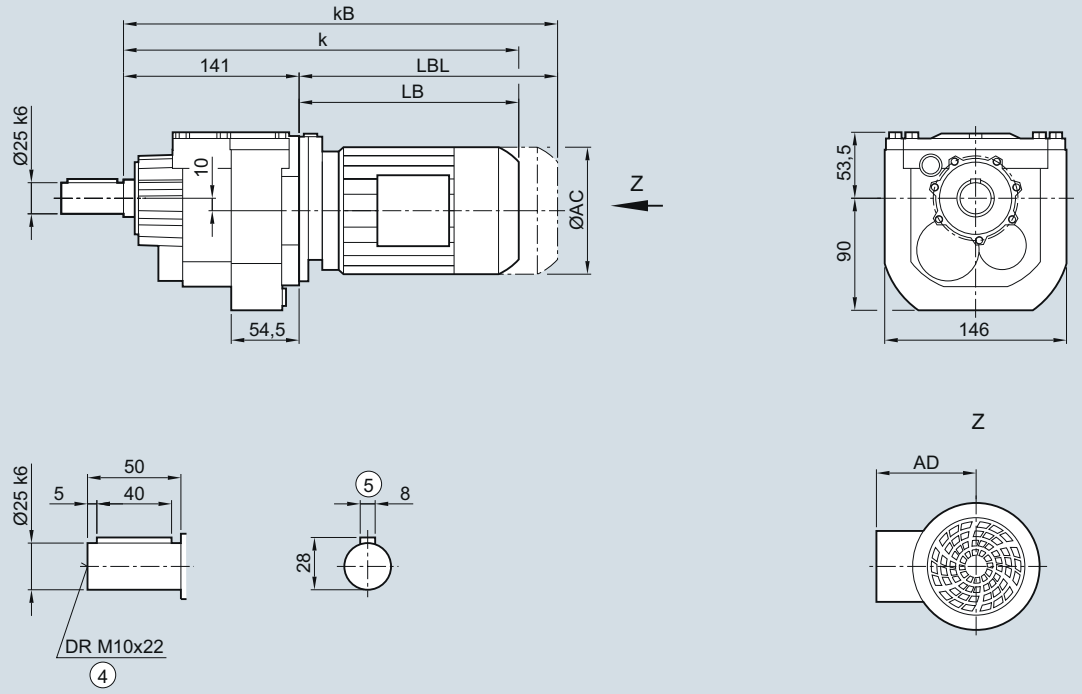

Motor	LA			LE					
	63	71	71Z	80	80Z	90	90Z	100	100Z
AC	117.8	138.8	138.8	156.3	156.3	173.8	173.8	198.0	198.0
AD[1)]	124.0	134.0	134.0	149.2	149.2	154.2	154.2	170.5	170.5
k	335.0	367.0	386.0	431.0	466.0	492.5	532.5	549.0	584.0
kB	379.5	422.0	441.0	491.0	526.0	562.5	602.5	627.5	662.5
LB	194.0	226.0	245.0	290.0	325.0	351.5	391.5	408.0	443.0
LBL	238.5	281.0	300.0	350.0	385.0	421.5	461.5	486.5	521.5

④ DIN 332
⑤ Feather key/keyway DIN 6885-1
1) AD depends on the motor options, for other dimensions see page 8/36.

© Siemens AG 2017

D/Z39 gearbox in a foot-mounted design

DZ030

D/Z39

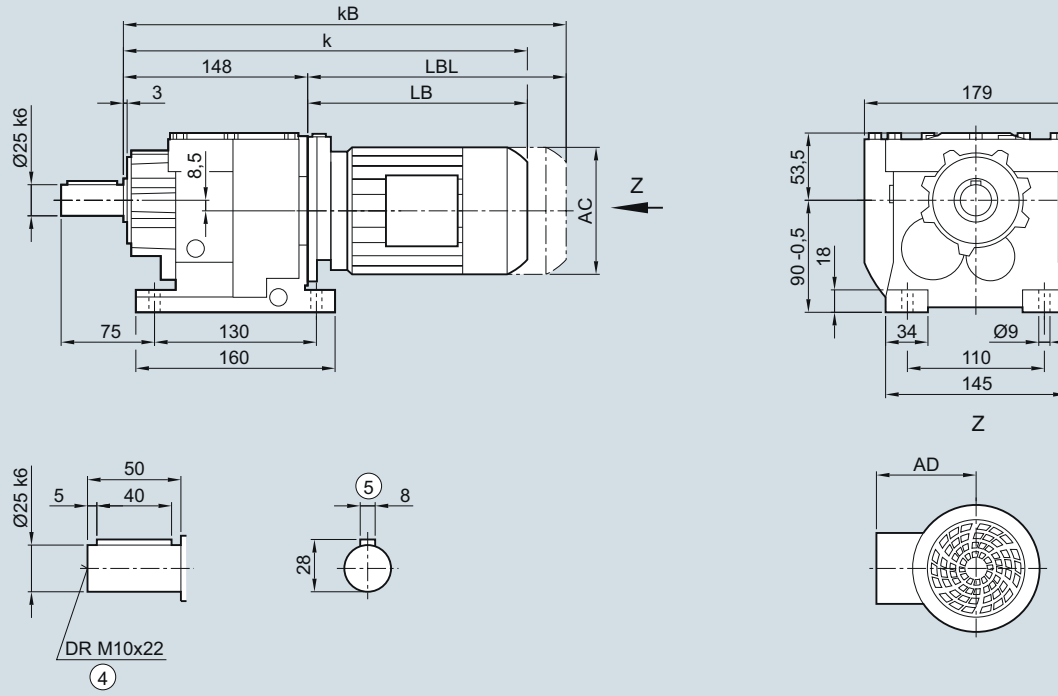

Motor	LA			LE							
	63	71	71Z	80	80Z	90	90Z	100	100Z	112	112Z
AC	117.8	138.8	138.8	156.3	156.3	173.8	173.8	198.0	198.0	222.0	222.0
AD[1)]	124.0	134.0	134.0	149.2	149.2	154.2	154.2	170.5	170.5	181.5	181.5
k	342.0	374.0	393.0	438.0	473.0	499.5	539.5	556.0	591.0	566.0	591.0
kB	386.5	429.0	448.0	498.0	533.0	569.5	609.5	634.5	669.5	639.0	664.0
LB	194.0	226.0	245.0	290.0	325.0	351.5	391.5	408.0	443.0	418.0	443.0
LBL	238.5	281.0	300.0	350.0	385.0	421.5	461.5	486.5	521.5	491.0	516.0

④ DIN 332

⑤ Feather key/keyway DIN 6885-1

1) AD depends on the motor options, for other dimensions see page 8/36.

© Siemens AG 2017

3

DB/ZB39 gearbox in a foot/flange-mounted design

DZB030

DB/ZB39

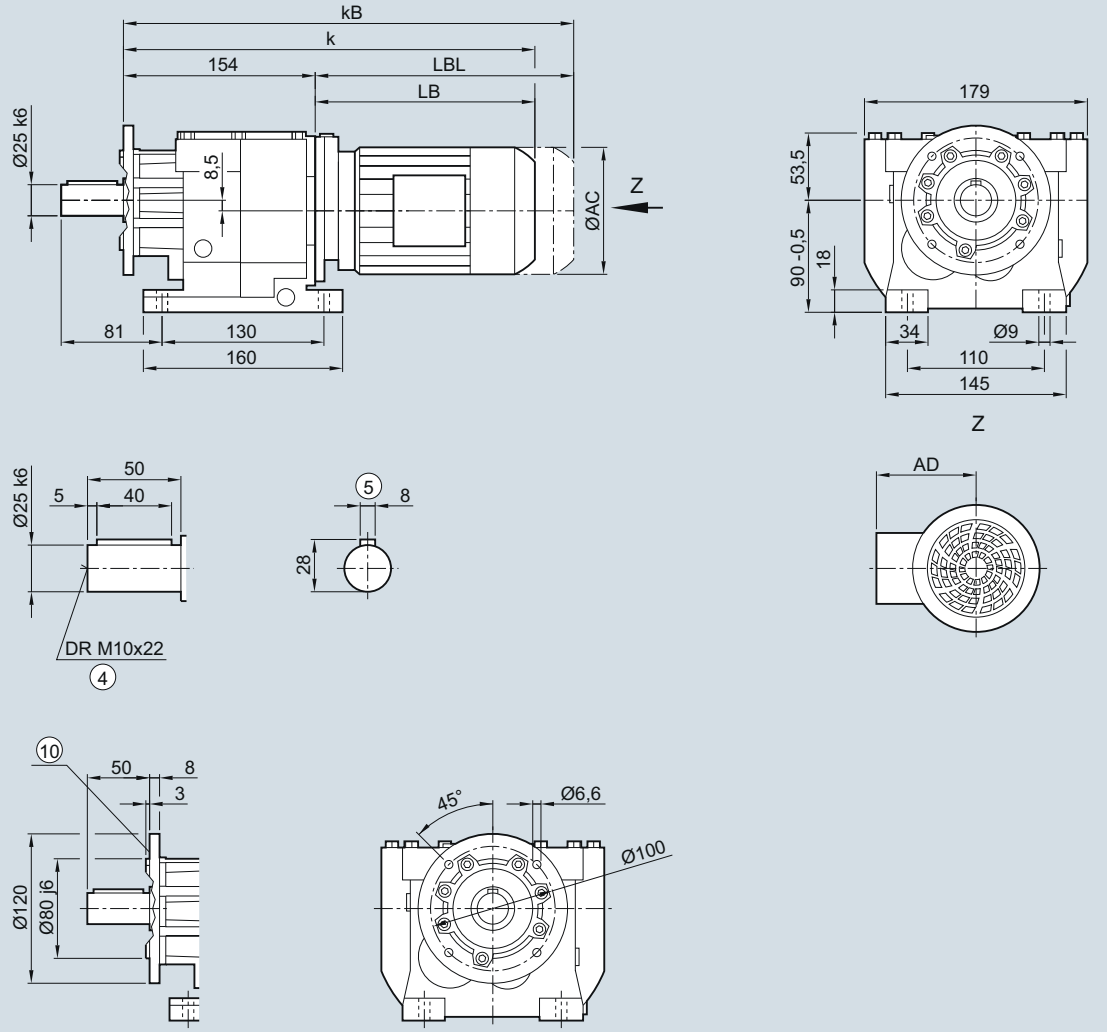

Motor	LA			LE							
	63	71	71Z	80	80Z	90	90Z	100	100Z	112	112Z
AC	117.8	138.8	138.8	156.3	156.3	173.8	173.8	198.0	198.0	222.0	222.0
AD[1)]	124.0	134.0	134.0	149.2	149.2	154.2	154.2	170.5	170.5	181.5	181.5
k	348.0	380.0	399.0	444.0	479.0	505.5	545.5	562.0	597.0	572.0	597.0
kB	392.5	435.0	454.0	504.0	539.0	575.5	615.5	640.5	675.5	645.0	670.0
LB	194.0	226.0	245.0	290.0	325.0	351.5	391.5	408.0	443.0	418.0	443.0
LBL	238.5	281.0	300.0	350.0	385.0	421.5	461.5	486.5	521.5	491.0	516.0

④ DIN 332
1) AD depends on the motor options, for other dimensions see page 8/36.
⑤ Feather key/keyway DIN 6885-1
⑩ For inner contour see page 3/164

© Siemens AG 2017

DF/ZF39 gearbox in a flange-mounted design

DZF030

DF/ZF39

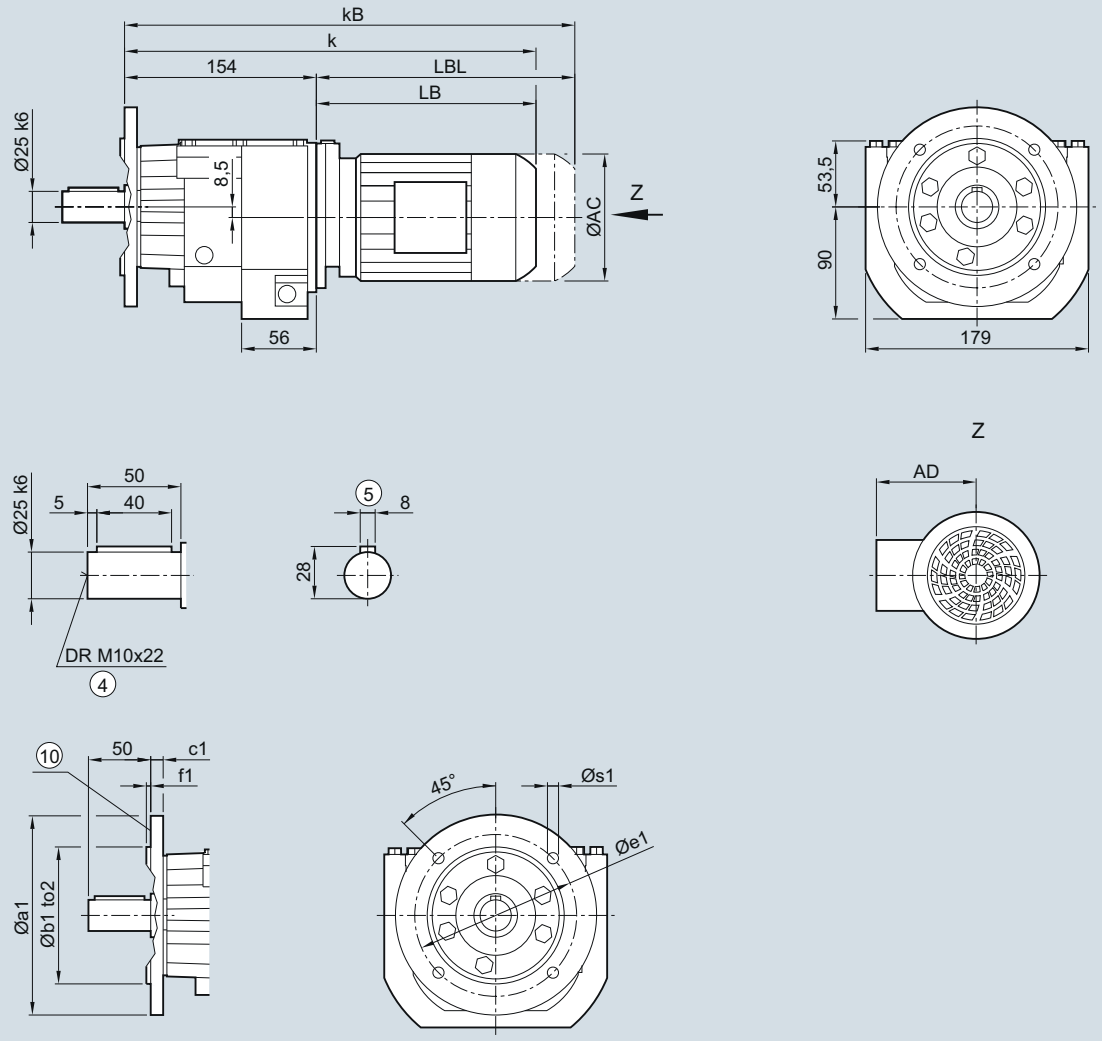

Flange	a1	b1	to2	c1	e1	f1	s1
	120	80	j6	8	100	3.0	6.6
	160	110	j6	10	130	3.5	9.0
	200	130	j6	12	165	3.5	11.0

Motor	LA			LE							
	63	71	71Z	80	80Z	90	90Z	100	100Z	112	112Z
AC	117.8	138.8	138.8	156.3	156.3	173.8	173.8	198.0	198.0	222.0	222.0
AD[1)]	124.0	134.0	134.0	149.2	149.2	154.2	154.2	170.5	170.5	181.5	181.5
k	348.0	380.0	399.0	444.0	479.0	505.5	545.5	562.0	597.0	572.0	597.0
kB	392.5	435.0	454.0	504.0	539.0	575.5	615.5	640.5	675.5	645.0	670.0
LB	194.0	226.0	245.0	290.0	325.0	351.5	391.5	408.0	443.0	418.0	443.0
LBL	238.5	281.0	300.0	350.0	385.0	421.5	461.5	486.5	521.5	491.0	516.0

④ DIN 332
1) AD depends on the motor options, for other dimensions see page 8/36.
⑤ Feather key/keyway DIN 6885-1
⑩ For inner contour see page 3/164

© Siemens AG 2017

DZ/ZZ39 gearbox in a housing flange design

DZZ030

DZ/ZZ39

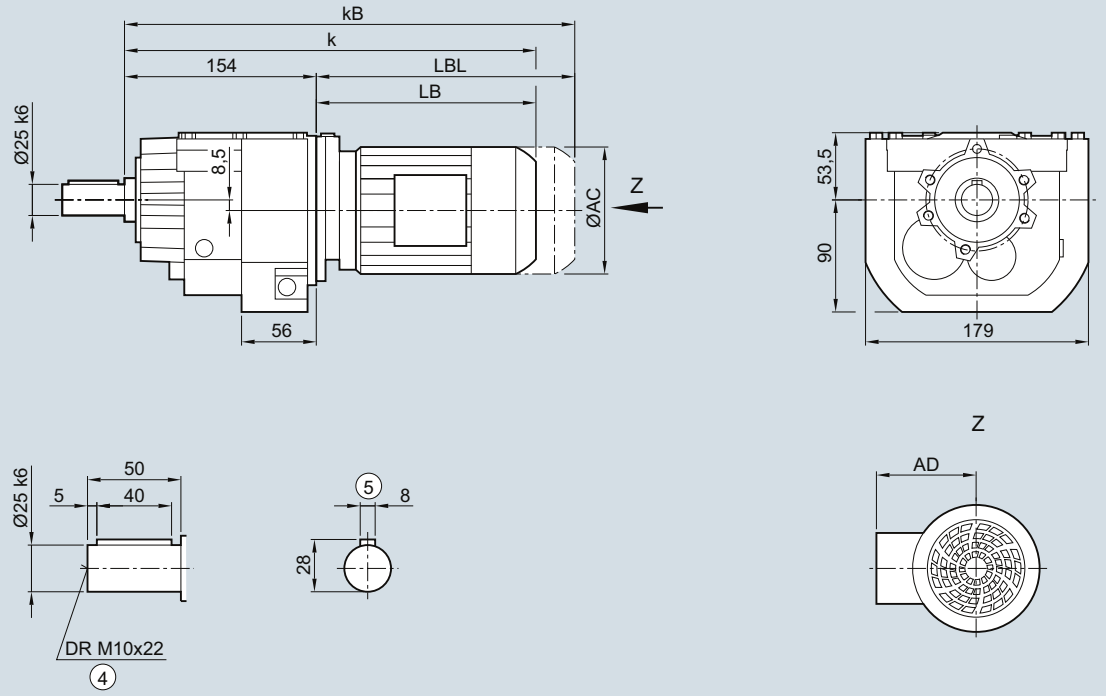

Motor	LA			LE							
	63	71	71Z	80	80Z	90	90Z	100	100Z	112	112Z
AC	117.8	138.8	138.8	156.3	156.3	173.8	173.8	198.0	198.0	222.0	222.0
AD[1)]	124.0	134.0	134.0	149.2	149.2	154.2	154.2	170.5	170.5	181.5	181.5
k	348.0	380.0	399.0	444.0	479.0	505.5	545.5	562.0	597.0	572.0	597.0
kB	392.5	435.0	454.0	504.0	539.0	575.5	615.5	640.5	675.5	645.0	670.0
LB	194.0	226.0	245.0	290.0	325.0	351.5	391.5	408.0	443.0	418.0	443.0
LBL	238.5	281.0	300.0	350.0	385.0	421.5	461.5	486.5	521.5	491.0	516.0

④ DIN 332

⑤ Feather key/keyway DIN 6885-1

1) AD depends on the motor options, for other dimensions see page 8/36.

© Siemens AG 2017

D/Z49 gearbox in a foot-mounted design and DB/ZB49 gearbox in a foot/flange-mounted design

DZ030, DZB030

D/Z49

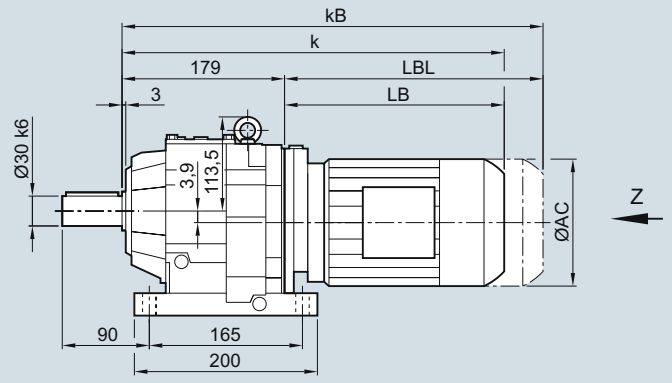

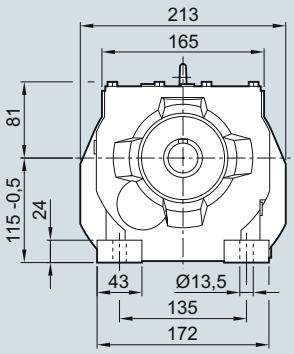

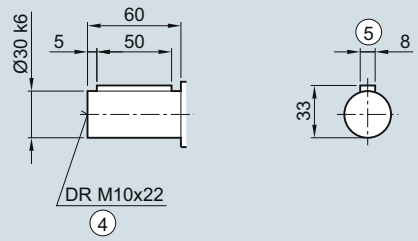

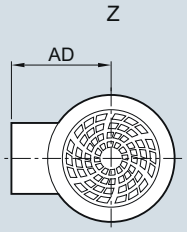

DB/ZB49

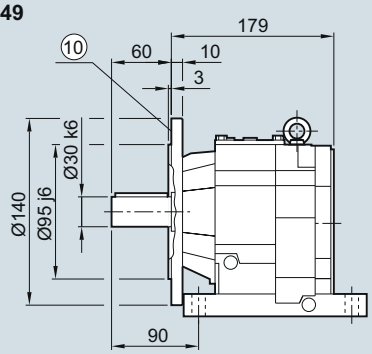

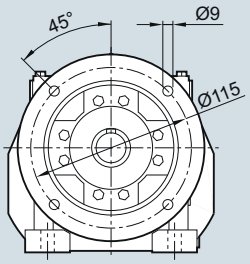

Motor	LA			LE									
	63	71	71Z	80	80Z	90	90Z	100	100Z	112	112Z	132	132Z
AC	117.8	138.8	138.8	156.3	156.3	173.8	173.8	198.0	198.0	222.0	222.0	264.0	264.0
AD[1)]	124.0	134.0	134.0	149.2	149.2	154.2	154.2	170.5	170.5	181.5	181.5	207.0	207.0
k	363.5	395.5	414.5	459.5	494.5	521.0	561.0	577.5	612.5	587.5	622.0	640.5	690.5
kB	408.0	450.5	469.5	519.5	554.5	591.0	631.0	656.0	691.0	660.5	695.0	745.0	795.0
LB	184.5	216.5	235.5	280.5	315.5	342.0	382.0	398.5	433.5	408.5	443.0	461.5	511.5
LBL	229.0	271.5	290.5	340.5	375.5	412.0	452.0	477.0	512.0	481.5	516.0	566.0	616.0

④ DIN 332
1) AD depends on the motor options, for other dimensions see page 8/36.
⑤ Feather key/keyway DIN 6885-1
⑩ For inner contour see page 3/164

© Siemens AG 2017

3

DF/ZF49 gearbox in a flange-mounted design

DZF030

DF/ZF49

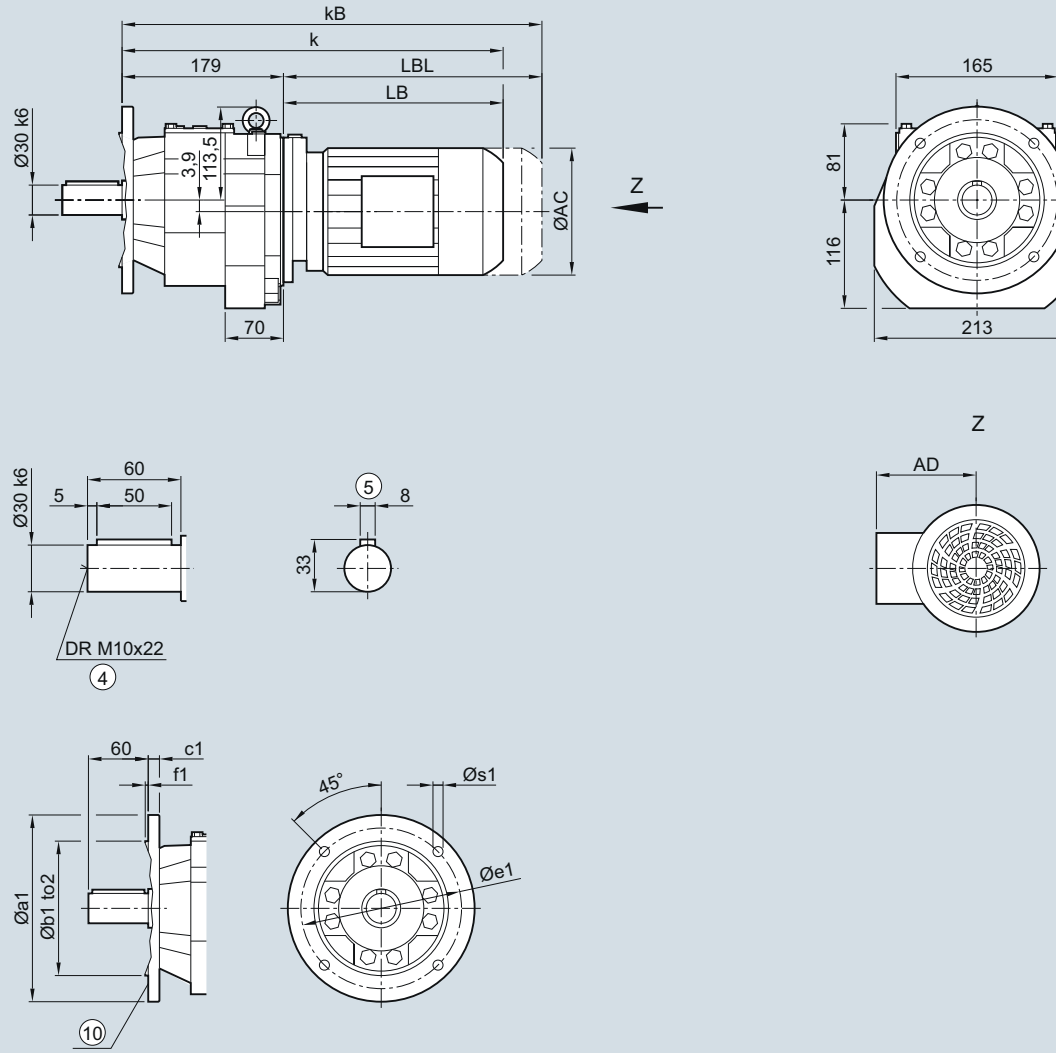

Flange	a1	b1	to2	c1	e1	f1	s1
	140	95	j6	10	115	3.0	9.0
	160	110	j6	10	130	3.5	9.0
	200	130	j6	12	165	3.5	11.0

Motor	LA			LE									
	63	71	71Z	80	80Z	90	90Z	100	100Z	112	112Z	132	132Z
AC	117.8	138.8	138.8	156.3	156.3	173.8	173.8	198.0	198.0	222.0	222.0	264.0	264.0
AD[1)]	124.0	134.0	134.0	149.2	149.2	154.2	154.2	170.5	170.5	181.5	181.5	207.0	207.0
k	363.5	395.5	414.5	459.5	494.5	521.0	561.0	577.5	612.5	587.5	622.0	640.5	690.5
kB	408.0	450.5	469.5	519.5	554.5	591.0	631.0	656.0	691.0	660.5	695.0	745.0	795.0
LB	184.5	216.5	235.5	280.5	315.5	342.0	382.0	398.5	433.5	408.5	443.0	461.5	511.5
LBL	229.0	271.5	290.5	340.5	375.5	412.0	452.0	477.0	512.0	481.5	516.0	566.0	616.0

④ DIN 332
1) AD depends on the motor options, for other dimensions see page 8/36.
⑤ Feather key/keyway DIN 6885-1
⑩ For inner contour see page 3/164

© Siemens AG 2017

DZ/ZZ49 gearbox in a housing flange design

DZZ030

DZ/ZZ49

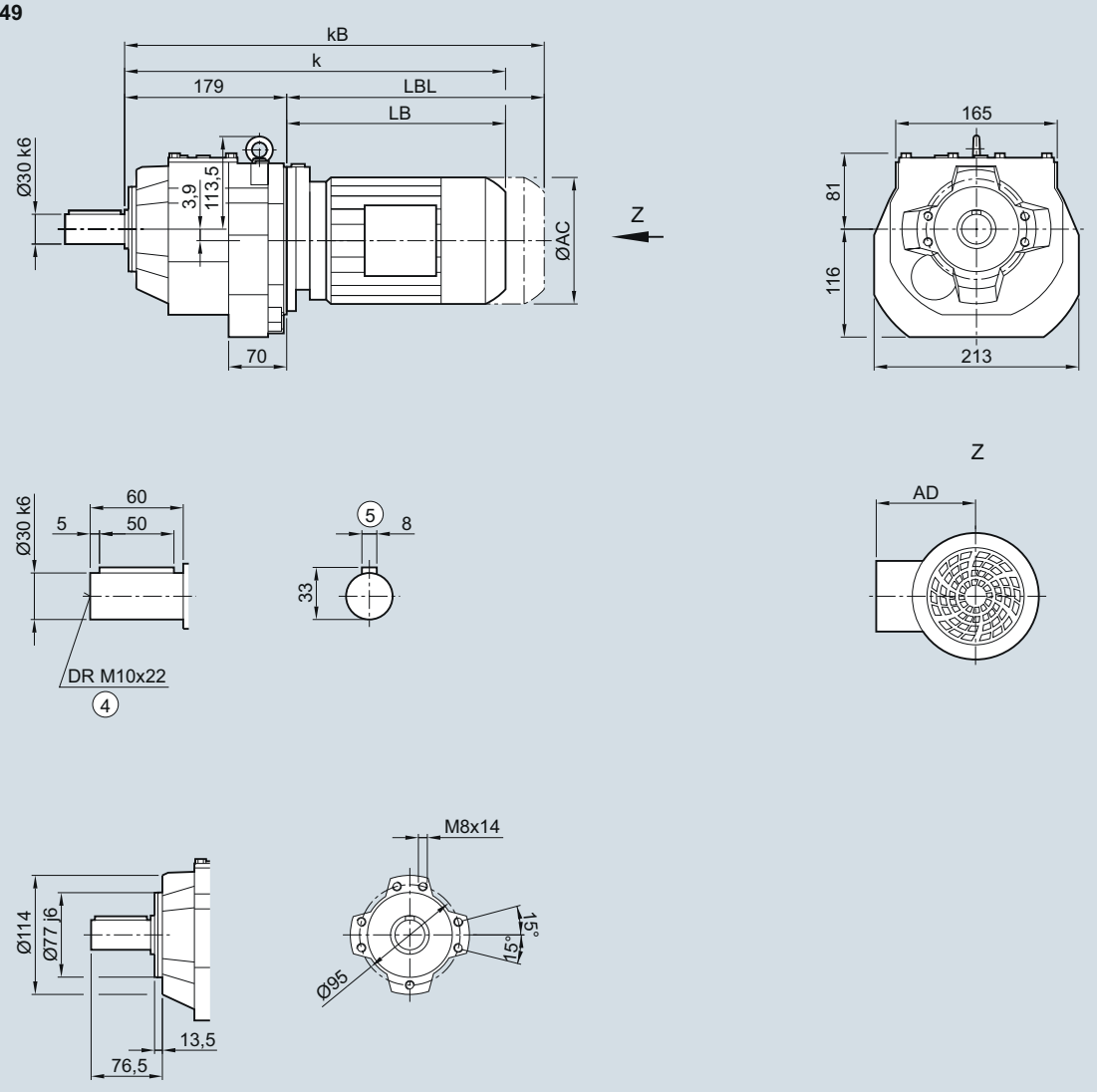

Motor	LA			LE									
	63	71	71Z	80	80Z	90	90Z	100	100Z	112	112Z	132	132Z
AC	117.8	138.8	138.8	156.3	156.3	173.8	173.8	198.0	198.0	222.0	222.0	264.0	264.0
AD[1)]	124.0	134.0	134.0	149.2	149.2	154.2	154.2	170.5	170.5	181.5	181.5	207.0	207.0
k	363.5	395.5	414.5	459.5	494.5	521.0	561.0	577.5	612.5	587.5	622.0	640.5	690.5
kB	408.0	450.5	469.5	519.5	554.5	591.0	631.0	656.0	691.0	660.5	695.0	745.0	795.0
LB	184.5	216.5	235.5	280.5	315.5	342.0	382.0	398.5	433.5	408.5	443.0	461.5	511.5
LBL	229.0	271.5	290.5	340.5	375.5	412.0	452.0	477.0	512.0	481.5	516.0	566.0	616.0

④ DIN 332

⑤ Feather key/keyway DIN 6885-1

1) AD depends on the motor options, for other dimensions see page 8/36.

© Siemens AG 2017

D/Z59 gearbox in a foot-mounted design and DB/ZB59 gearbox in a foot/flange-mounted design

DZ030, DZB030

D/Z59

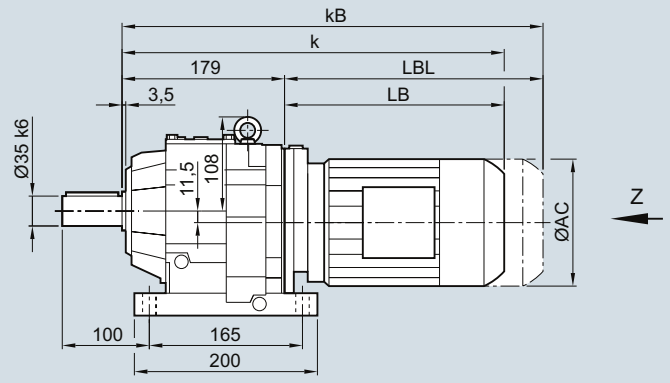

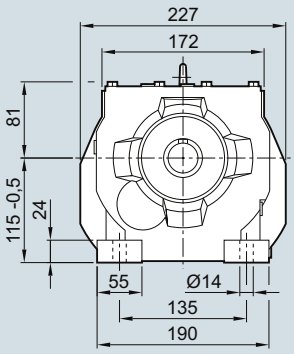

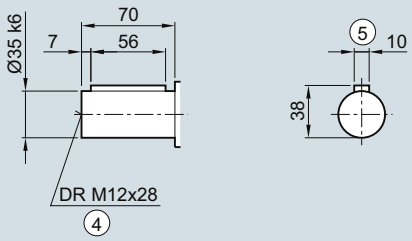

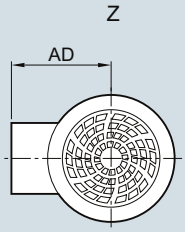

DB/ZB59

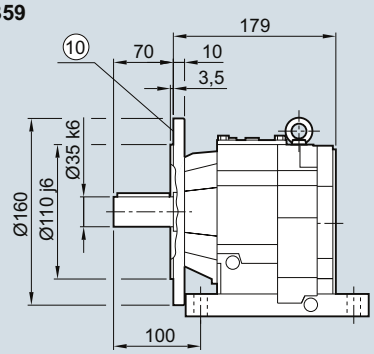

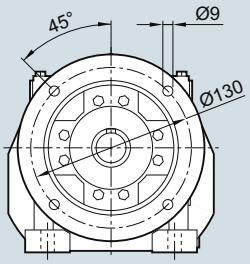

Motor	LA			LE									
	63	71	71Z	80	80Z	90	90Z	100	100Z	112	112Z	132	132Z
AC	117.8	138.8	138.8	156.3	156.3	173.8	173.8	198.0	198.0	222.0	222.0	264.0	264.0
AD[1)]	124.0	134.0	134.0	149.2	149.2	154.2	154.2	170.5	170.5	181.5	181.5	207.0	207.0
k	363.5	395.5	414.5	459.5	494.5	521.0	561.0	577.5	612.5	587.5	622.0	640.5	690.5
kB	408.0	450.5	469.5	519.5	554.5	591.0	631.0	656.0	691.0	660.5	695.0	745.0	795.0
LB	184.5	216.5	235.5	280.5	315.5	342.0	382.0	398.5	433.5	408.5	443.0	461.5	511.5
LBL	229.0	271.5	290.5	340.5	375.5	412.0	452.0	477.0	512.0	481.5	516.0	566.0	616.0

④ DIN 332
⑤ Feather key/keyway DIN 6885-1
1) AD depends on the motor options, for other dimensions see page 8/36.
⑩ For inner contour see page 3/164

© Siemens AG 2017

DF/ZF59 gearbox in a flange-mounted design

DZF030

DF/ZF59

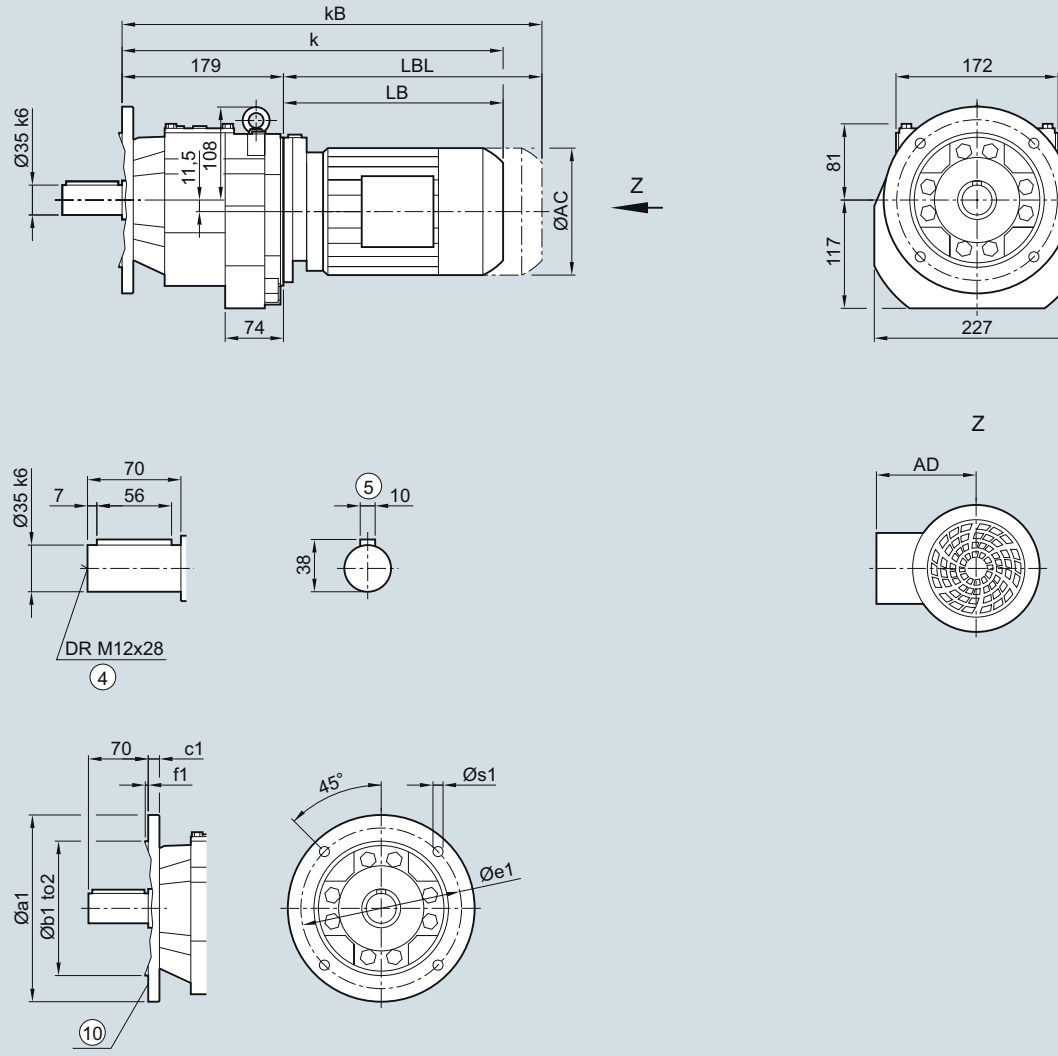

Flange	a1	b1	to2	c1	e1	f1	s1
	160	110	j6	10	130	3.5	9.0
	200	130	j6	12	165	3.5	11.0
	250	180	j6	15	215	4.0	13.5

Motor	LA			LE									
	63	71	71Z	80	80Z	90	90Z	100	100Z	112	112Z	132	132Z
AC	117.8	138.8	138.8	156.3	156.3	173.8	173.8	198.0	198.0	222.0	222.0	264.0	264.0
AD[1)]	124.0	134.0	134.0	149.2	149.2	154.2	154.2	170.5	170.5	181.5	181.5	207.0	207.0
k	363.5	395.5	414.5	459.5	494.5	521.0	561.0	577.5	612.5	587.5	622.0	640.5	690.5
kB	408.0	450.5	469.5	519.5	554.5	591.0	631.0	656.0	691.0	660.5	695.0	745.0	795.0
LB	184.5	216.5	235.5	280.5	315.5	342.0	382.0	398.5	433.5	408.5	443.0	461.5	511.5
LBL	229.0	271.5	290.5	340.5	375.5	412.0	452.0	477.0	512.0	481.5	516.0	566.0	616.0

④ DIN 332
1) AD depends on the motor options, for other dimensions see page 8/36.
⑤ Feather key/keyway DIN 6885-1
⑩ For inner contour see page 3/164

© Siemens AG 2017

3

DZ/ZZ59 gearbox in a housing flange design

DZZ030

DZ/ZZ59

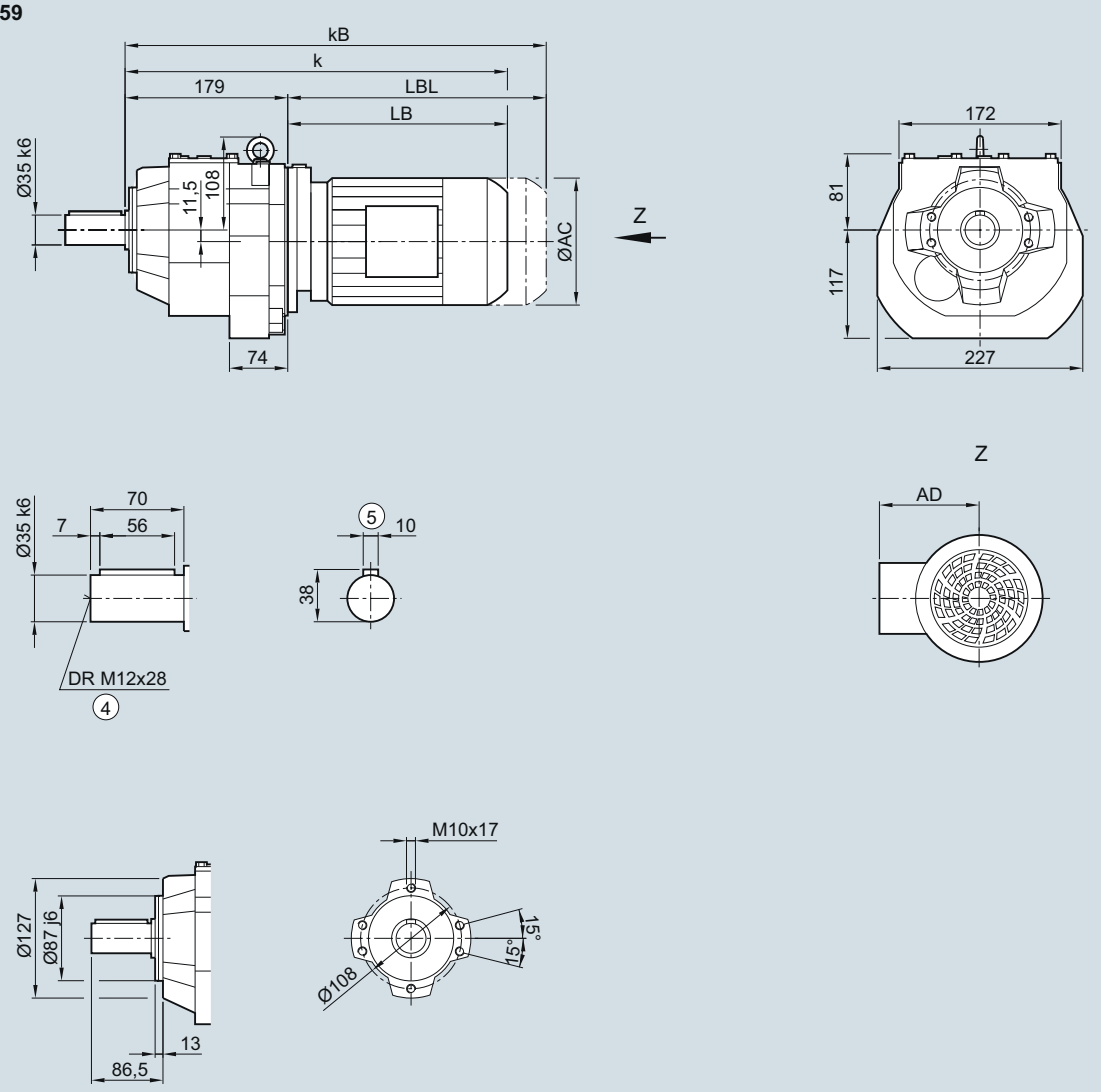

Motor	LA			LE80									
	63	71	71Z	80	80Z	90	90Z	100	100Z	112	112Z	132	132Z
AC	117.8	138.8	138.8	156.3	156.3	173.8	173.8	198.0	198.0	222.0	222.0	264.0	264.0
AD[1)]	124.0	134.0	134.0	149.2	149.2	154.2	154.2	170.5	170.5	181.5	181.5	207.0	207.0
k	363.5	395.5	414.5	459.5	494.5	521.0	561.0	577.5	612.5	587.5	622.0	640.5	690.5
kB	408.0	450.5	469.5	519.5	554.5	591.0	631.0	656.0	691.0	660.5	695.0	745.0	795.0
LB	184.5	216.5	235.5	280.5	315.5	342.0	382.0	398.5	433.5	408.5	443.0	461.5	511.5
LBL	229.0	271.5	290.5	340.5	375.5	412.0	452.0	477.0	512.0	481.5	516.0	566.0	616.0

④ DIN 332

⑤ Feather key/keyway DIN 6885-1

1) AD depends on the motor options, for other dimensions see page 8/36.

© Siemens AG 2017

D/Z69 gearbox in a foot-mounted design and DB/ZB69 gearbox in a foot/flange-mounted design

DZ030, DZB030

D/Z69

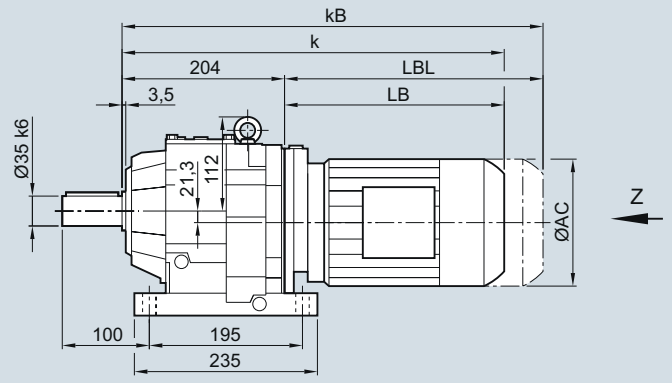

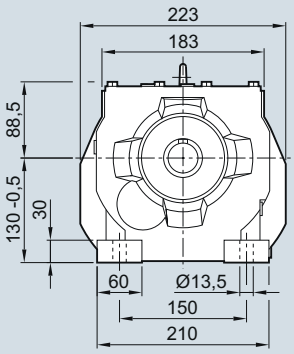

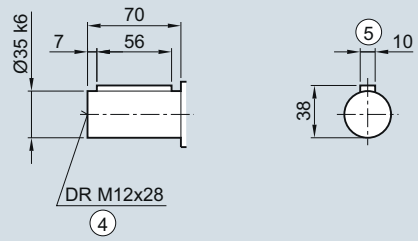

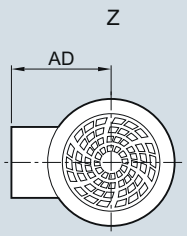

DB/ZB69

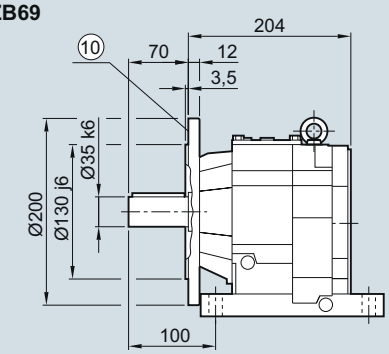

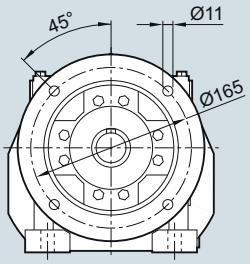

Motor	LA			LE									
	63	71	71Z	80	80Z	90	90Z	100	100Z	112	112Z	132	132Z
AC	117.8	138.8	138.8	156.3	156.3	173.8	173.8	198.0	198.0	222.0	222.0	264.0	264.0
AD[1)]	124.0	134.0	134.0	149.2	149.2	154.2	154.2	170.5	170.5	181.5	181.5	207.0	207.0
k	388.5	420.5	439.5	484.5	519.5	546.0	586.0	602.5	637.5	612.5	647.0	665.5	715.5
kB	433.0	475.5	494.5	544.5	579.5	616.0	656.0	681.0	716.0	685.5	720.0	770.0	820.0
LB	184.5	216.5	235.5	280.5	315.5	342.0	382.0	398.5	433.5	408.5	443.0	461.5	511.5
LBL	229.0	271.5	290.5	340.5	375.5	412.0	452.0	477.0	512.0	481.5	516.0	566.0	616.0

④ DIN 332
⑤ Feather key/keyway DIN 6885-1
1) AD depends on the motor options, for other dimensions see page 8/36.
⑩ For inner contour see page 3/164

© Siemens AG 2017

3

DF/ZF69 gearbox in a flange-mounted design

DZF030

DF/ZF69

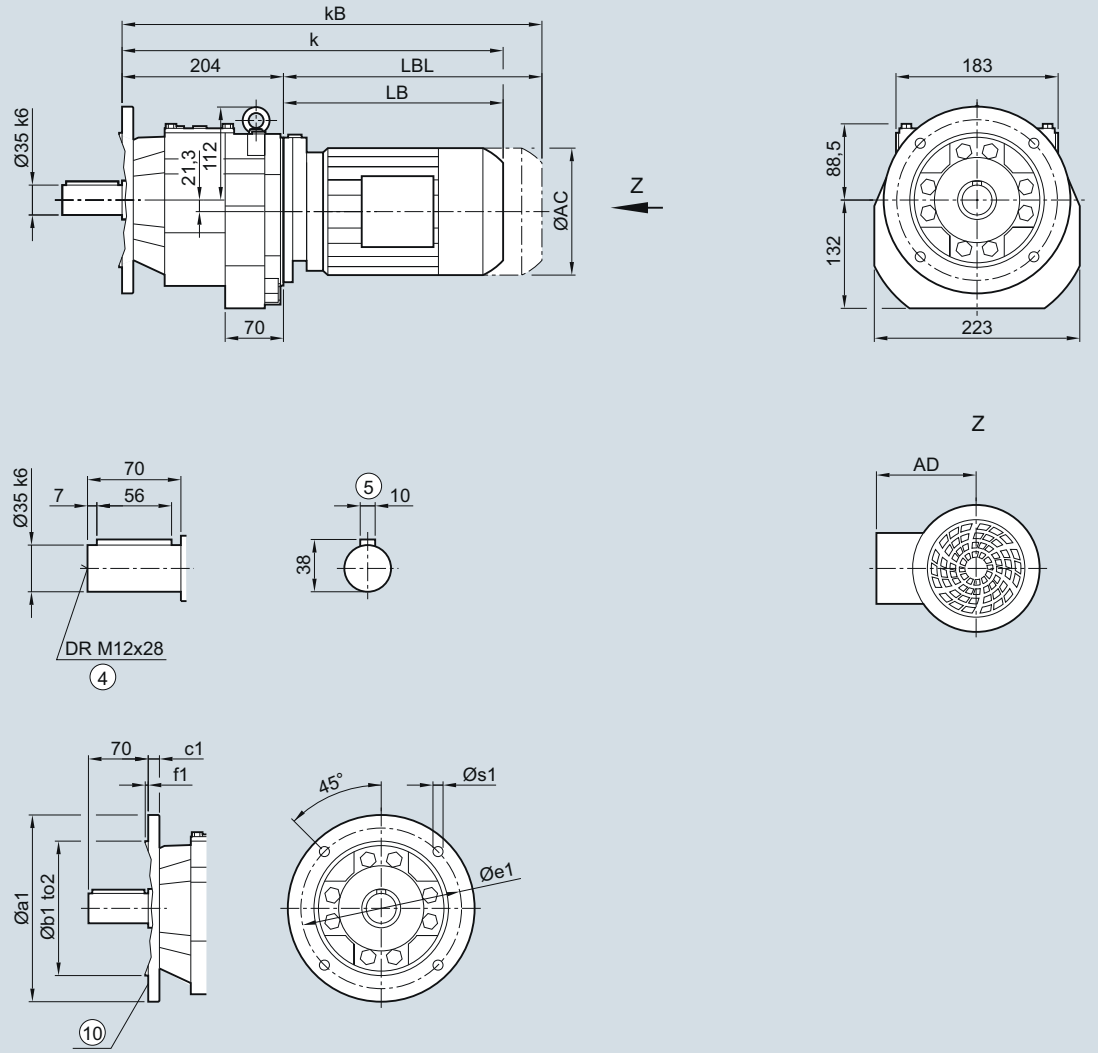

Flange	a1	b1	to2	c1	e1	f1	s1
	200	130	j6	12	165	3.5	11.0
	250	180	j6	15	215	4.0	13.5

Motor	LA 63	71	71Z	LE 80	80Z	90	90Z	100	100Z	112	112Z	132	132Z
AC	117.8	138.8	138.8	156.3	156.3	173.8	173.8	198.0	198.0	222.0	222.0	264.0	264.0
AD[1)]	124.0	134.0	134.0	149.2	149.2	154.2	154.2	170.5	170.5	181.5	181.5	207.0	207.0
k	388.5	420.5	439.5	484.5	519.5	546.0	586.0	602.5	637.5	612.5	647.0	665.5	715.5
kB	433.0	475.5	494.5	544.5	579.5	616.0	656.0	681.0	716.0	685.5	720.0	770.0	820.0
LB	184.5	216.5	235.5	280.5	315.5	342.0	382.0	398.5	433.5	408.5	443.0	461.5	511.5
LBL	229.0	271.5	290.5	340.5	375.5	412.0	452.0	477.0	512.0	481.5	516.0	566.0	616.0

④ DIN 332
⑤ Feather key/keyway DIN 6885-1
1) AD depends on the motor options, for other dimensions see page 8/36.
⑩ For inner contour see page 3/164

© Siemens AG 2017

DZ/ZZ69 gearbox in a housing flange design

DZZ030

DZ/ZZ69

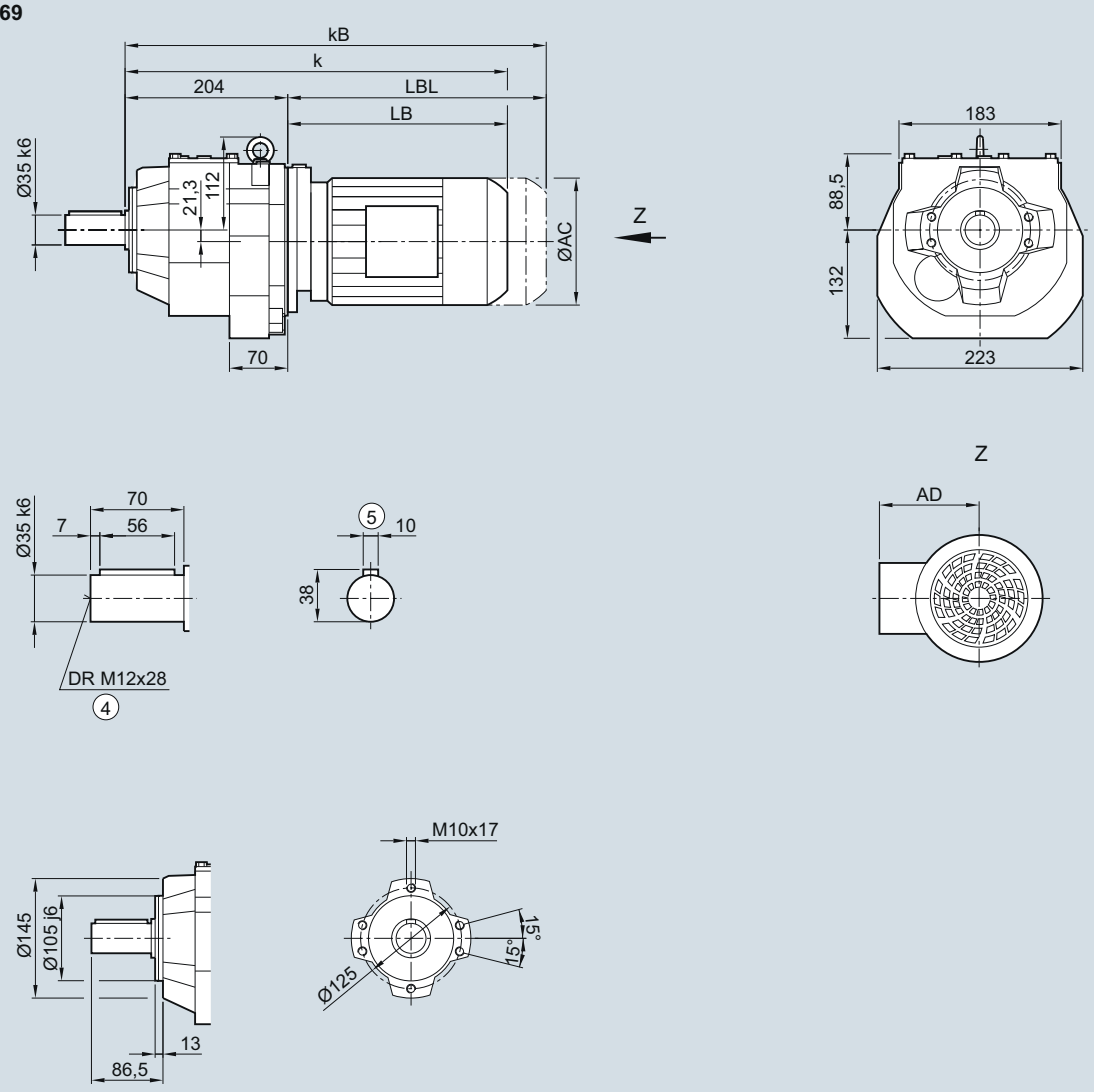

Motor	LA			LE									
	63	71	71Z	80	80Z	90	90Z	100	100Z	112	112Z	132	132Z
AC	117.8	138.8	138.8	156.3	156.3	173.8	173.8	198.0	198.0	222.0	222.0	264.0	264.0
AD[1)]	124.0	134.0	134.0	149.2	149.2	154.2	154.2	170.5	170.5	181.5	181.5	207.0	207.0
k	388.5	420.5	439.5	484.5	519.5	546.0	586.0	602.5	637.5	612.5	647.0	665.5	715.5
kB	433.0	475.5	494.5	544.5	579.5	616.0	656.0	681.0	716.0	685.5	720.0	770.0	820.0
LB	184.5	216.5	235.5	280.5	315.5	342.0	382.0	398.5	433.5	408.5	443.0	461.5	511.5
LBL	229.0	271.5	290.5	340.5	375.5	412.0	452.0	477.0	512.0	481.5	516.0	566.0	616.0

④ DIN 332

⑤ Feather key/keyway DIN 6885-1

1) AD depends on the motor options, for other dimensions see page 8/36.

© Siemens AG 2017

D/Z79 gearbox in a foot-mounted design and DB/ZB79 gearbox in a foot/flange-mounted design

DZ030, DZB030

D/Z79

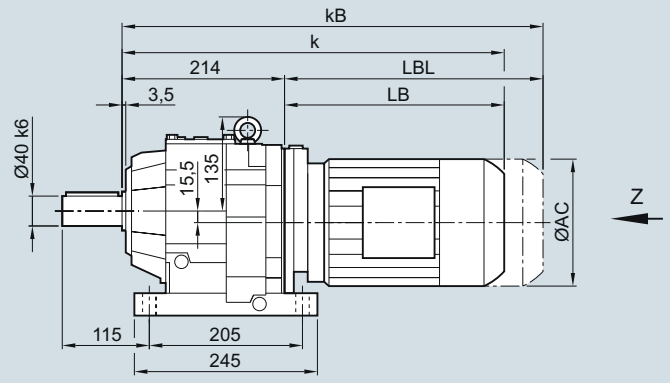

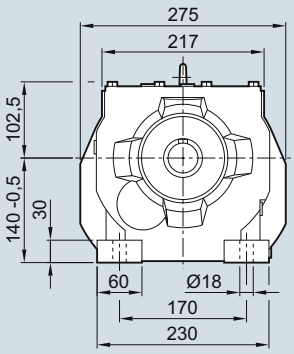

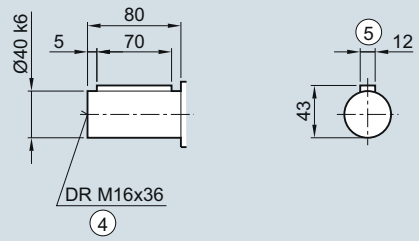

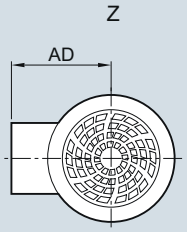

DB/ZB79

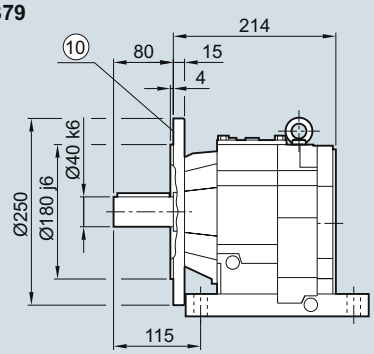

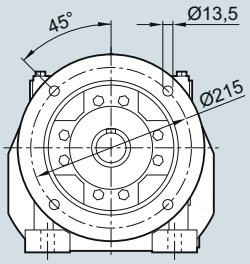

Motor	LA 71	71Z	LE 80	80Z	90	90Z	100	100Z	112	112Z	132	132Z	160	160Z
AC	138.8	138.8	156.3	156.3	173.8	173.8	198.0	198.0	222.0	222.0	264.0	264.0	318.0	318.0
AD[1)]	134.0	134.0	149.2	149.2	154.2	154.2	170.5	170.5	181.5	181.5	207.0	207.0	241.0	241.0
k	428.5	447.5	488.5	523.5	550.0	590.0	606.5	641.5	616.5	641.5	669.5	719.5	751.5	811.5
kB	483.5	502.5	548.5	583.5	620.0	660.0	685.0	720.0	689.5	714.5	774.0	824.0	867.5	927.5
LB	214.5	233.5	274.5	309.5	336.0	376.0	392.5	427.5	402.5	427.5	455.5	505.5	537.5	597.5
LBL	269.5	288.5	334.5	369.5	406.0	446.0	471.0	506.0	475.5	500.5	560.0	610.0	653.5	713.5

④ DIN 332
⑤ Feather key/keyway DIN 6885-1
1) AD depends on the motor options, for other dimensions see page 8/36.
⑩ For inner contour see page 3/164

© Siemens AG 2017

DF/ZF79 gearbox in a flange-mounted design

DZF030

DF/ZF79

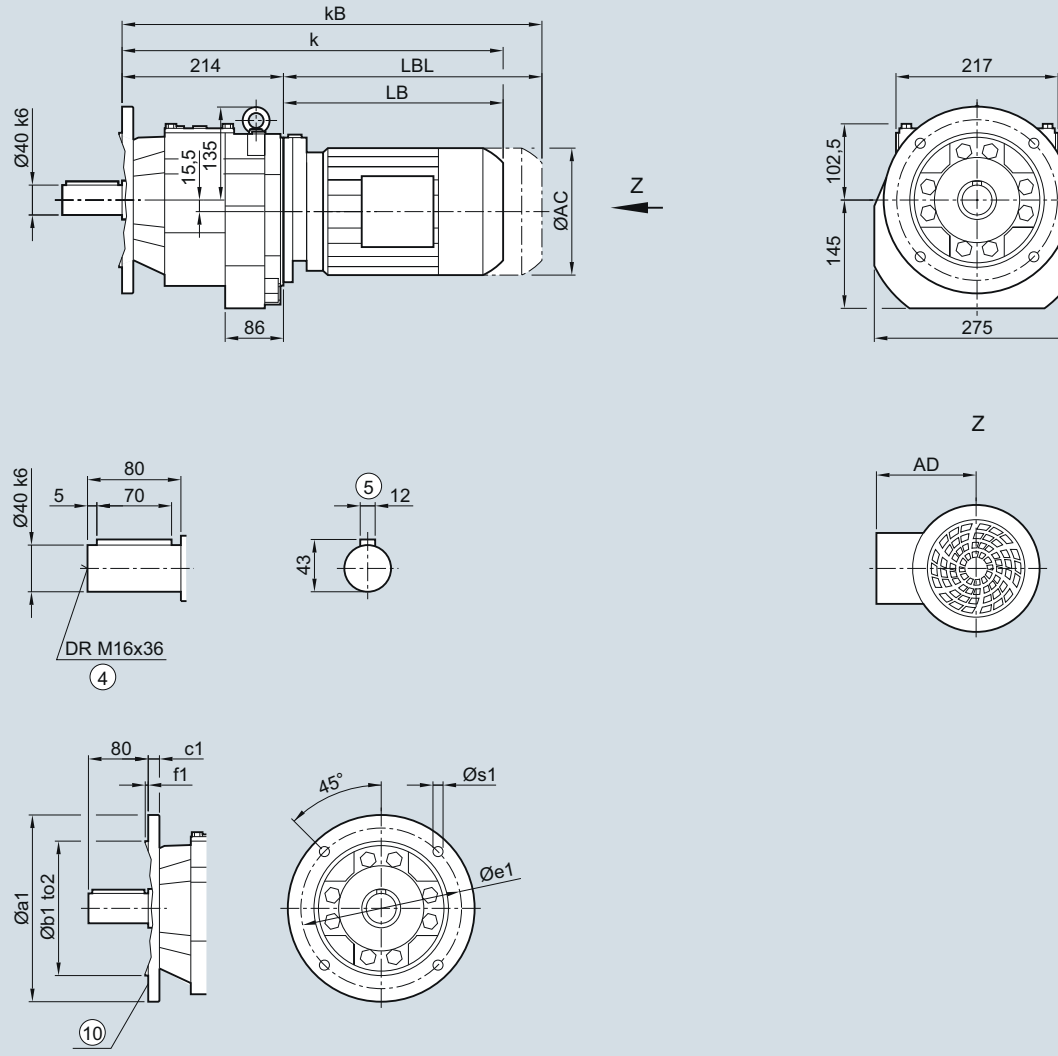

Flange	a1	b1	to2	c1	e1	f1	s1
	250	180	j6	15	215	4.0	13.5
	300	230	j6	16	265	4.0	13.5

Motor	LA 71	71Z	LE 80	80Z	90	90Z	100	100Z	112	112Z	132	132Z	160	160Z
AC	138.8	138.8	156.3	156.3	173.8	173.8	198.0	198.0	222.0	222.0	264.0	264.0	318.0	318.0
AD[1)]	134.0	134.0	149.2	149.2	154.2	154.2	170.5	170.5	181.5	181.5	207.0	207.0	241.0	241.0
k	428.5	447.5	488.5	523.5	550.0	590.0	606.5	641.5	616.5	641.5	669.5	719.5	751.5	811.5
kB	483.5	502.5	548.5	583.5	620.0	660.0	685.0	720.0	689.5	714.5	774.0	824.0	867.5	927.5
LB	214.5	233.5	274.5	309.5	336.0	376.0	392.5	427.5	402.5	427.5	455.5	505.5	537.5	597.5
LBL	269.5	288.5	334.5	369.5	406.0	446.0	471.0	506.0	475.5	500.5	560.0	610.0	653.5	713.5

④ DIN 332
1) AD depends on the motor options, for other dimensions see page 8/36.
⑤ Feather key/keyway DIN 6885-1
⑩ For inner contour see page 3/164

© Siemens AG 2017

DZ/ZZ79 gearbox in a housing flange design

DZZ030

DZ/ZZ79

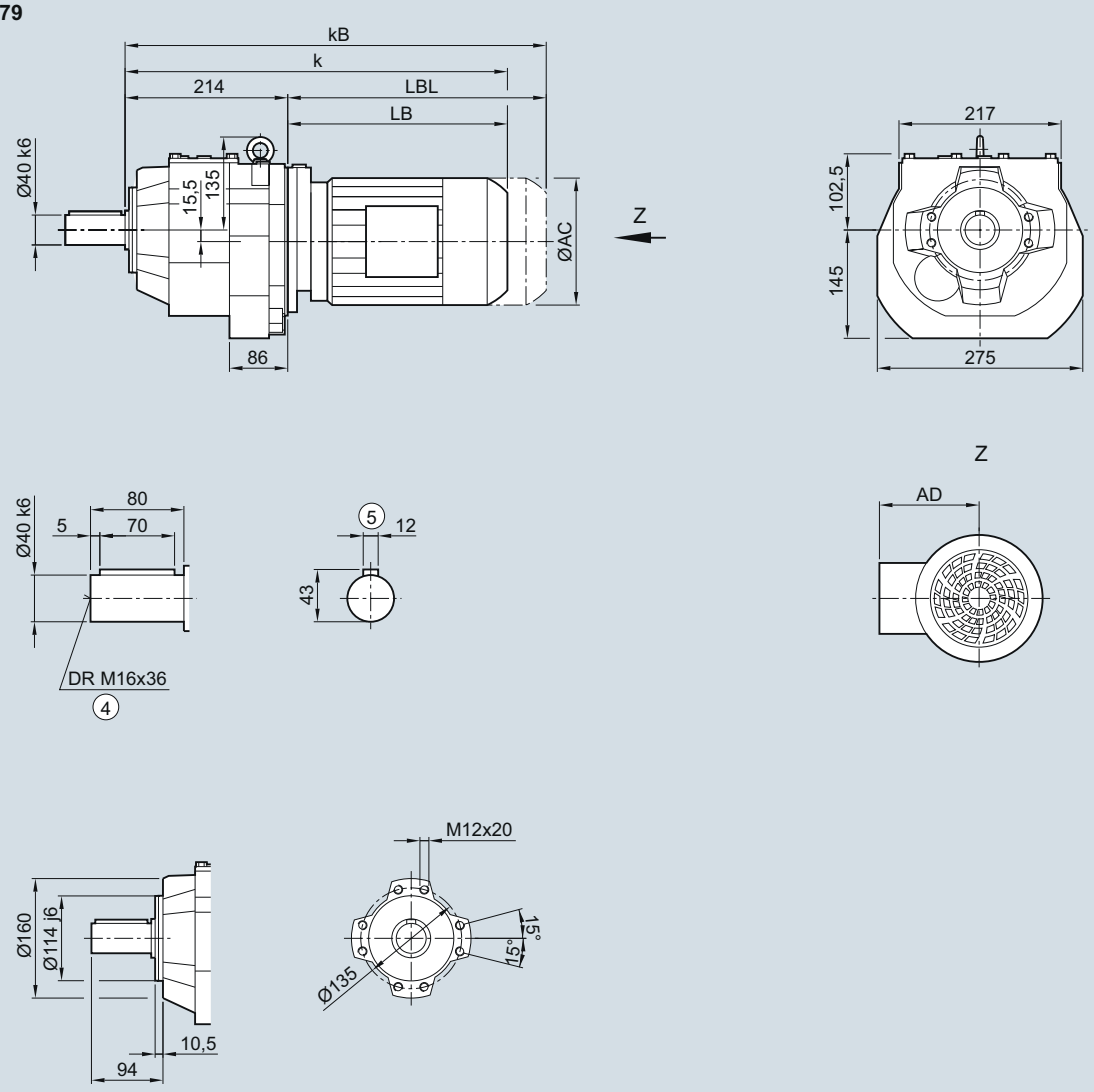

Motor	LA		LE											
	71	71Z	80	80Z	90	90Z	100	100Z	112	112Z	132	132Z	160	160Z
AC	138.8	138.8	156.3	156.3	173.8	173.8	198.0	198.0	222.0	222.0	264.0	264.0	318.0	318.0
AD[1)]	134.0	134.0	149.2	149.2	154.2	154.2	170.5	170.5	181.5	181.5	207.0	207.0	241.0	241.0
k	428.5	447.5	488.5	523.5	550.0	590.0	606.5	641.5	616.5	641.5	669.5	719.5	751.5	811.5
kB	483.5	502.5	548.5	583.5	620.0	660.0	685.0	720.0	689.5	714.5	774.0	824.0	867.5	927.5
LB	214.5	233.5	274.5	309.5	336.0	376.0	392.5	427.5	402.5	427.5	455.5	505.5	537.5	597.5
LBL	269.5	288.5	334.5	369.5	406.0	446.0	471.0	506.0	475.5	500.5	560.0	610.0	653.5	713.5

④ DIN 332

⑤ Feather key/keyway DIN 6885-1

1) AD depends on the motor options, for other dimensions see page 8/36.

© Siemens AG 2017

D/Z89 gearbox in a foot-mounted design and DB/ZB89 gearbox in a foot/flange-mounted design

DZ030, DZB030

D/Z89

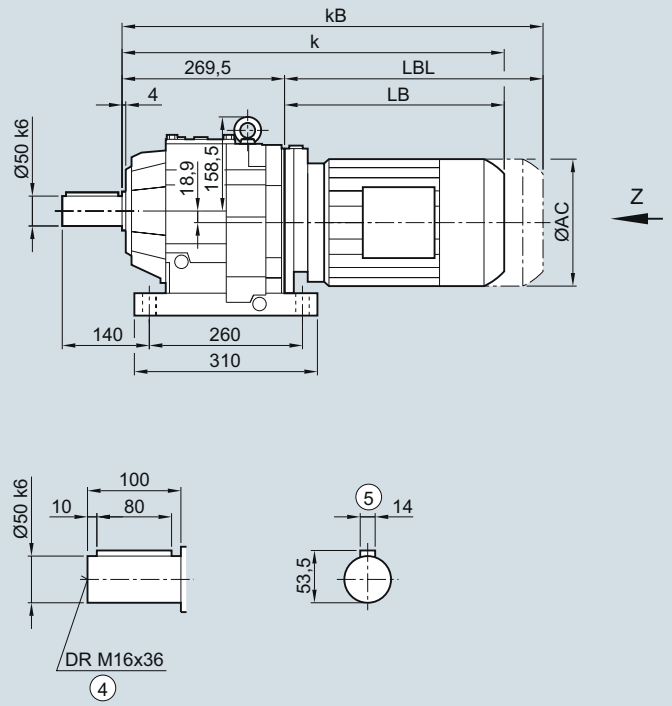

DB/ZB89

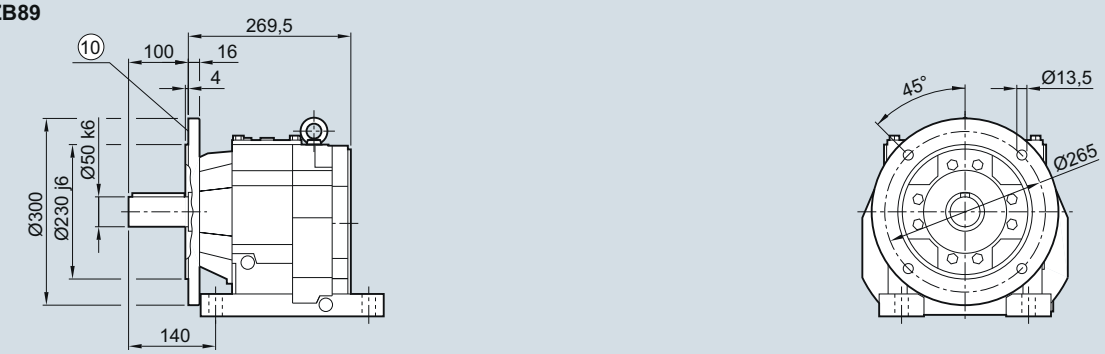

Motor	LE 80	80Z	90	90Z	100	100Z	112	112Z	132	132Z	160	160Z	LES 180	180Z
AC	156.3	156.3	173.8	173.8	198.0	198.0	222.0	222.0	264.0	264.0	318.0	318.0	352.5	352.5
AD[1)]	149.2	149.2	154.2	154.2	170.5	170.5	181.5	181.5	207.0	207.0	241.0	241.0	292.0	292.0
k	531.0	566.0	592.5	632.5	645.0	680.0	655.0	680.0	708.0	758.0	790.0	850.0	863.0	893.0
kB	591.0	626.0	662.5	702.5	723.5	758.5	728.0	753.0	812.5	862.5	906.0	966.0	992.0	1 022.0
LB	261.5	296.5	323.0	363.0	375.5	410.5	385.5	410.5	438.5	488.5	520.5	580.5	593.5	623.5
LBL	321.5	356.5	393.0	433.0	454.0	489.0	458.5	483.5	543.0	593.0	636.5	696.5	722.5	752.5

④ DIN 332
1) AD depends on the motor options, for other dimensions see page 8/36.
⑤ Feather key/keyway DIN 6885-1
⑩ For inner contour see page 3/164

© Siemens AG 2017

DF/ZF89 gearbox in a flange-mounted design

DZF030

DF/ZF89

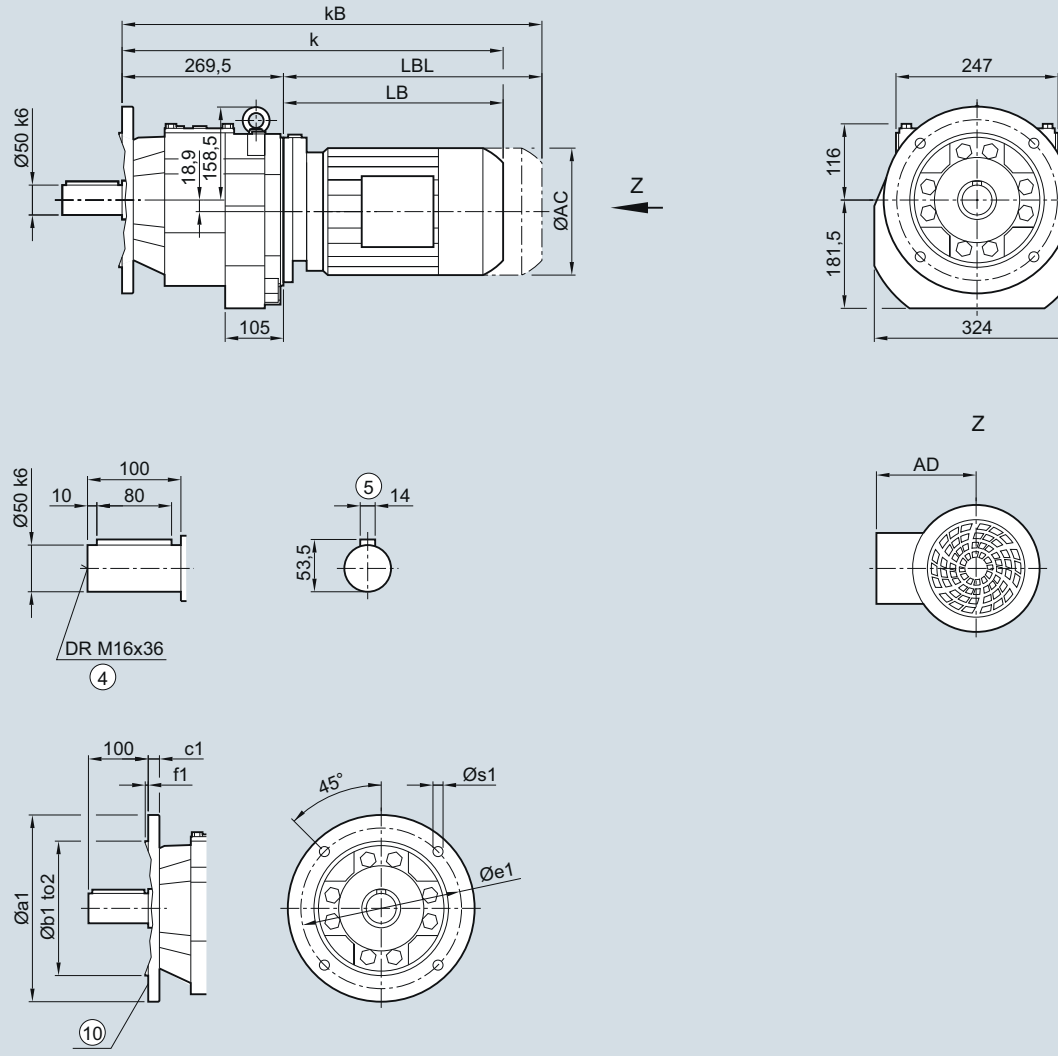

Flange	a1	b1	to2	c1	e1	f1	s1
	300	230	j6	16	265	4.0	13.5
	350	250	j6	18	300	5.0	17.5

Motor	LE 80	80Z	90	90Z	100	100Z	112	112Z	132	132Z	160	160Z	LES 180	180Z
AC	156.3	156.3	173.8	173.8	198.0	198.0	222.0	222.0	264.0	264.0	318.0	318.0	352.5	352.5
AD[1)]	149.2	149.2	154.2	154.2	170.5	170.5	181.5	181.5	207.0	207.0	241.0	241.0	292.0	292.0
k	531.0	566.0	592.5	632.5	645.0	680.0	655.0	680.0	708.0	758.0	790.0	850.0	863.0	893.0
kB	591.0	626.0	662.5	702.5	723.5	758.5	728.0	753.0	812.5	862.5	906.0	966.0	992.0	1 022.0
LB	261.5	296.5	323.0	363.0	375.5	410.5	385.5	410.5	438.5	488.5	520.5	580.5	593.5	623.5
LBL	321.5	356.5	393.0	433.0	454.0	489.0	458.5	483.5	543.0	593.0	636.5	696.5	722.5	752.5

④ DIN 332
⑤ Feather key/keyway DIN 6885-1
1) AD depends on the motor options, for other dimensions see page 8/36.
⑩ For inner contour see page 3/164

© Siemens AG 2017

DZ/ZZ89 gearbox in a housing flange design

DZZ030

DZ/ZZ89

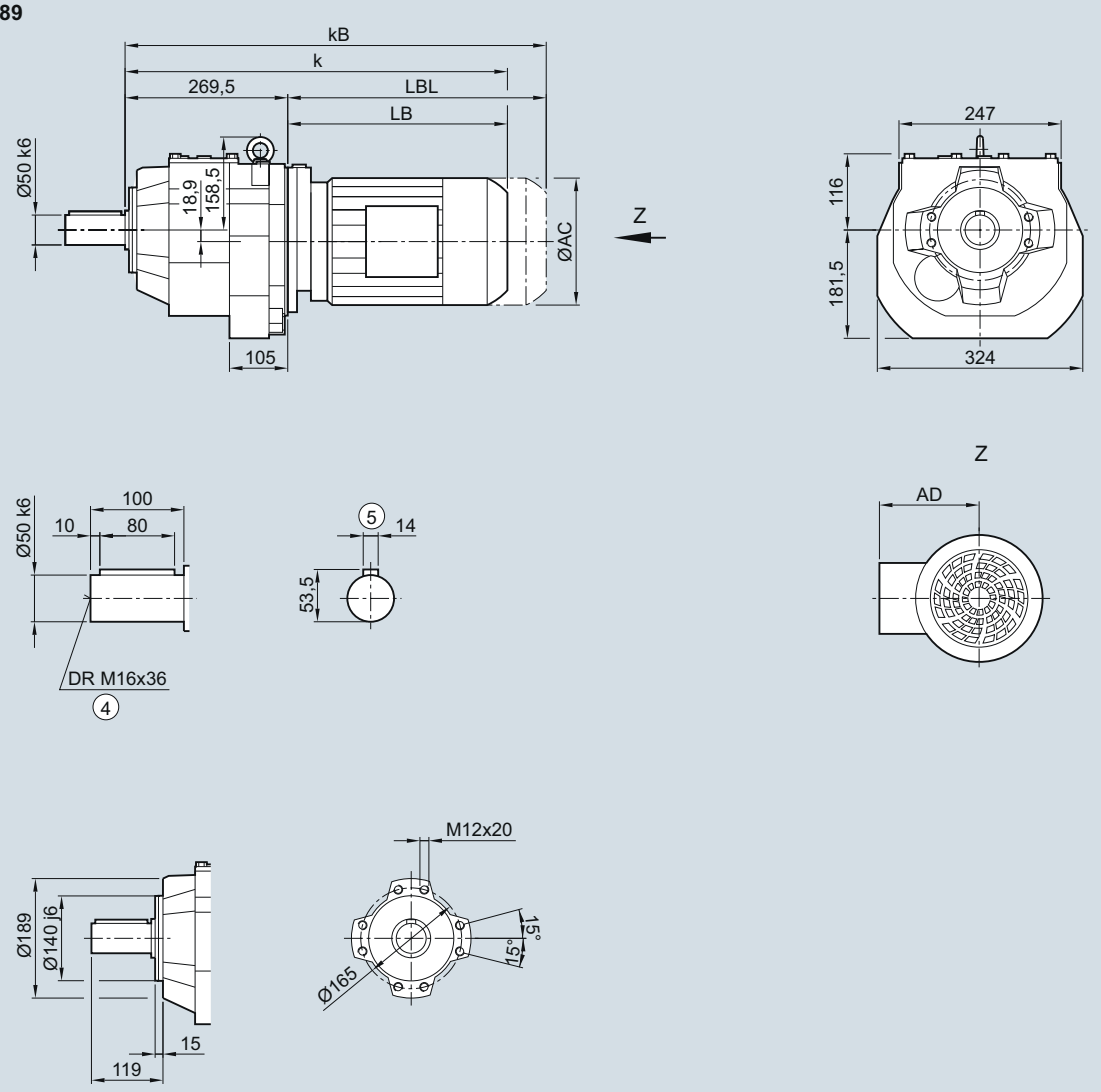

Motor	LE 80	80Z	90	90Z	100	100Z	112	112Z	132	132Z	160	160Z	LES 180	180Z
AC	156.3	156.3	173.8	173.8	198.0	198.0	222.0	222.0	264.0	264.0	318.0	318.0	352.5	352.5
AD[1)]	149.2	149.2	154.2	154.2	170.5	170.5	181.5	181.5	207.0	207.0	241.0	241.0	292.0	292.0
k	531.0	566.0	592.5	632.5	645.0	680.0	655.0	680.0	708.0	758.0	790.0	850.0	863.0	893.0
kB	591.0	626.0	662.5	702.5	723.5	758.5	728.0	753.0	812.5	862.5	906.0	966.0	992.0	1 022.0
LB	261.5	296.5	323.0	363.0	375.5	410.5	385.5	410.5	438.5	488.5	520.5	580.5	593.5	623.5
LBL	321.5	356.5	393.0	433.0	454.0	489.0	458.5	483.5	543.0	593.0	636.5	696.5	722.5	752.5

④ DIN 332

⑤ Feather key/keyway DIN 6885-1

1) AD depends on the motor options, for other dimensions see page 8/36.

© Siemens AG 2017

3

D/Z109 gearbox in a foot-mounted design

DZ030

D/Z109

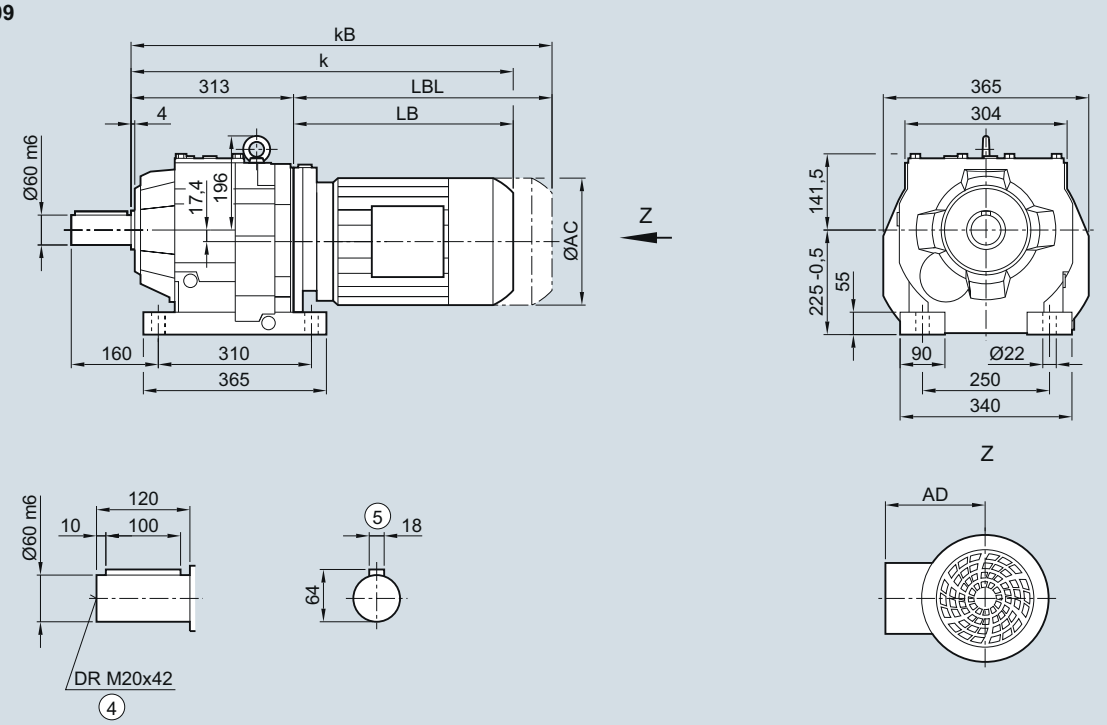

Motor	LE										LES					
	90S	90Z	100	100Z	112	112Z	132	132Z	160	160Z	180	180Z	200	200Z	225	225Y
AC	173.8	173.8	198.0	198.0	222.0	222.0	264.0	264.0	318.0	318.0	352.5	352.5	392.5	392.5	439.0	439.0
AD[1)]	154.2	154.2	170.5	170.5	181.5	181.5	207.0	207.0	241.0	241.0	292.0	292.0	315.0	315.0	337.0	337.0
k	629.0	669.0	679.5	714.5	689.5	714.5	742.5	792.5	824.5	884.5	897.5	927.5	965.5	990.5	1 011.0	1 071.0
kB	699.0	739.0	758.0	793.0	762.5	787.5	847.0	897.0	940.5	1 000.5	1 026.5	1 056.5	1 112.5	1 137.5	1 239.0	1 299.0
LB	316.0	356.0	366.5	401.5	376.5	401.5	429.5	479.5	511.5	571.5	584.5	614.5	652.5	677.5	698.0	758.0
LBL	386.0	426.0	445.0	480.0	449.5	474.5	534.0	584.0	627.5	687.5	713.5	743.5	799.5	824.5	926.0	986.0

④ DIN 332
⑤ Feather key/keyway DIN 6885-1
1) AD depends on the motor options, for other dimensions see page 8/36.

© Siemens AG 2017

DF/ZF109 gearbox in a flange-mounted design

DZF030

DF/ZF109

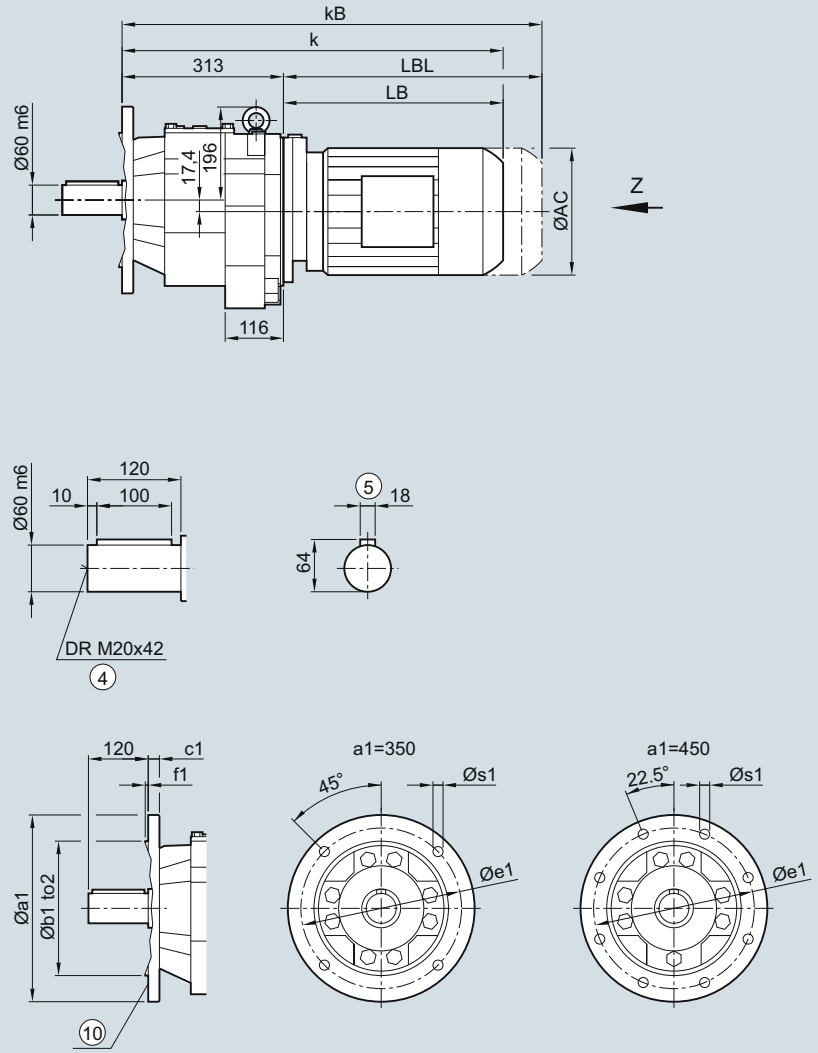

Flange	a1	b1	to2	c1	e1	f1	s1
	350	250	h6	18	300	5	17.5
	450	350	h6	22	400	5	17.5

Motor	LE										LES					
	90S	90Z	100	100Z	112	112Z	132	132Z	160	160Z	180	180Z	200	200Z	225	225Y
AC	173.8	173.8	198.0	198.0	222.0	222.0	264.0	264.0	318.0	318.0	352.5	352.5	392.5	392.5	439.0	439.0
AD[1)]	154.2	154.2	170.5	170.5	181.5	181.5	207.0	207.0	241.0	241.0	292.0	292.0	315.0	315.0	337.0	337.0
k	629.0	669.0	679.5	714.5	689.5	714.5	742.5	792.5	824.5	884.5	897.5	927.5	965.5	990.5	1 011.0	1 071.0
kB	699.0	739.0	758.0	793.0	762.5	787.5	847.0	897.0	940.5	1 000.5	1 026.5	1 056.5	1 112.5	1 137.5	1 239.0	1 299.0
LB	316.0	356.0	366.5	401.5	376.5	401.5	429.5	479.5	511.5	571.5	584.5	614.5	652.5	677.5	698.0	758.0
LBL	386.0	426.0	445.0	480.0	449.5	474.5	534.0	584.0	627.5	687.5	713.5	743.5	799.5	824.5	926.0	986.0

④ DIN 332
1) AD depends on the motor options, for other dimensions see page 8/36.
⑤ Feather key/keyway DIN 6885-1
⑩ For inner contour see page 3/164

© Siemens AG 2017

3

DZ/ZZ109 gearbox in a housing flange design

DZZ030

DZ/ZZ109

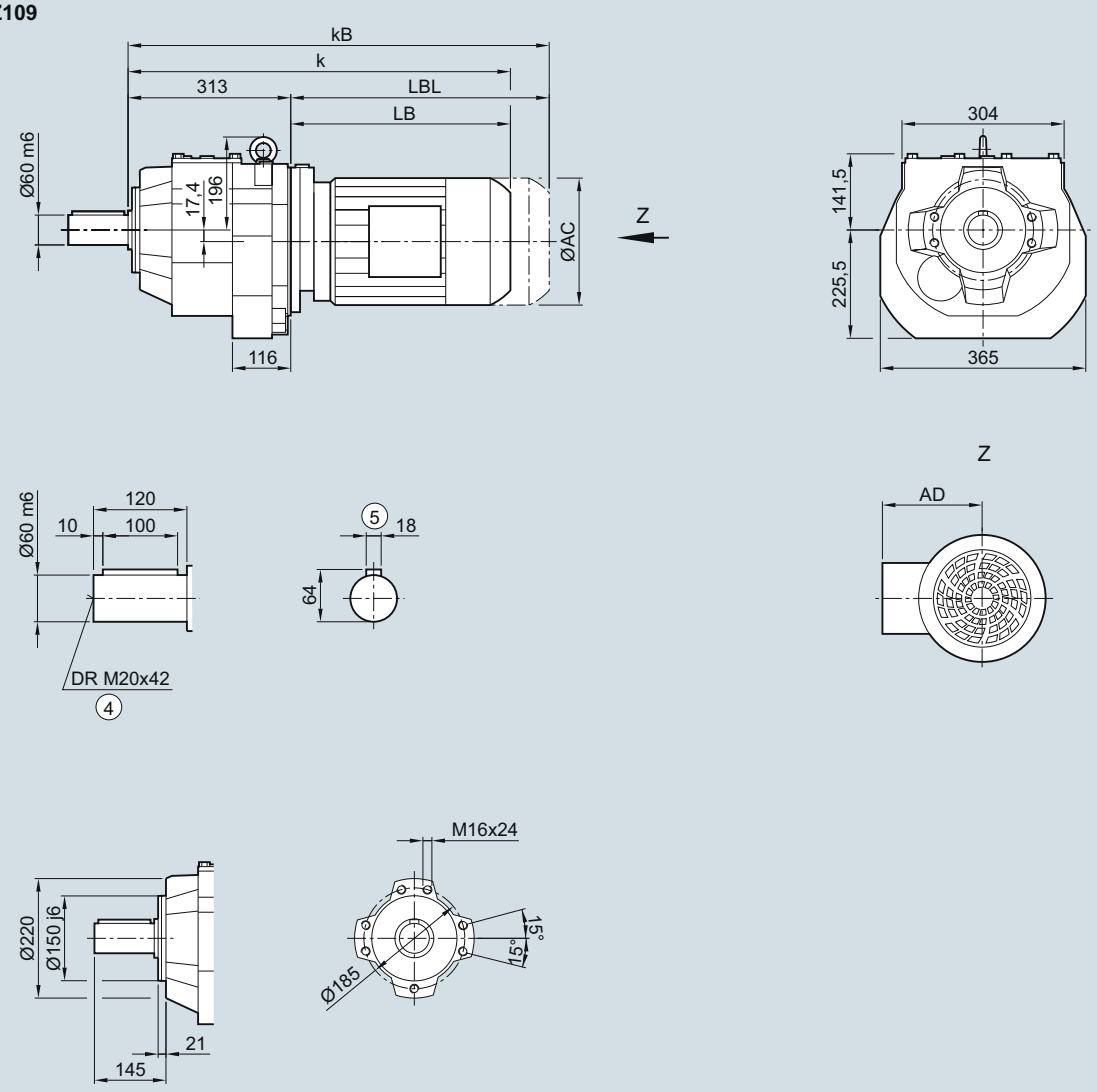

Motor	LE										LES					
	90S	90Z	100	100Z	112	112Z	132	132Z	160	160Z	180	180Z	200	200Z	225	225Y
AC	173.8	173.8	198.0	198.0	222.0	222.0	264.0	264.0	318.0	318.0	352.5	352.5	392.5	392.5	439.0	439.0
AD[1)]	154.2	154.2	170.5	170.5	181.5	181.5	207.0	207.0	241.0	241.0	292.0	292.0	315.0	315.0	337.0	337.0
k	629.0	669.0	679.5	714.5	689.5	714.5	742.5	792.5	824.5	884.5	897.5	927.5	965.5	990.5	1 011.0	1 071.0
kB	699.0	739.0	758.0	793.0	762.5	787.5	847.0	897.0	940.5	1 000.5	1 026.5	1 056.5	1 112.5	1 137.5	1 239.0	1 299.0
LB	316.0	356.0	366.5	401.5	376.5	401.5	429.5	479.5	511.5	571.5	584.5	614.5	652.5	677.5	698.0	758.0
LBL	386.0	426.0	445.0	480.0	449.5	474.5	534.0	584.0	627.5	687.5	713.5	743.5	799.5	824.5	926.0	986.0

④ DIN 332

⑤ Feather key/keyway DIN 6885-1

1) AD depends on the motor options, for other dimensions see page 8/36.

© Siemens AG 2017

D/Z129 gearbox in a foot-mounted design

DZ030

D/Z129

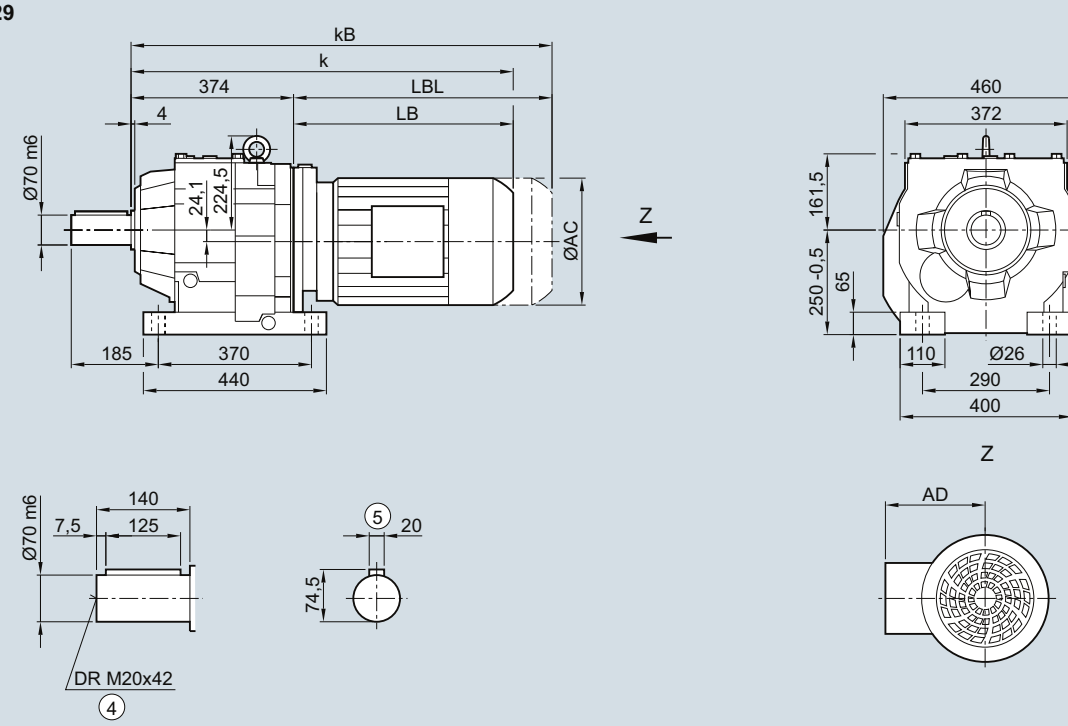

Motor	LE										LES						
	90S	90Z	100	100Z	112	112Z	132	132Z	160	160Z	180	180Z	200	200Z	225	225Y	250
AC	173.8	173.8	198.0	198.0	222.0	222.0	264.0	264.0	318.0	318.0	352.5	352.5	392.5	392.5	439.0	439.0	487.0
AD[1)]	154.2	154.2	170.5	170.5	181.5	181.5	207.0	207.0	241.0	241.0	292.0	292.0	315.0	315.0	337.0	337.0	407.5
k	683.0	723.0	731.5	766.5	741.5	766.5	792.5	842.5	874.5	934.5	947.5	977.5	1 015.5	1 040.5	1 067.0	1 127.0	1 172.5
kB	753.0	793.0	810.0	845.0	814.5	839.5	897.0	947.0	990.5	1 050.5	1 076.5	1 106.5	1 162.5	1 187.5	1 295.0	1 355.0	1 397.5
LB	309.0	349.0	357.5	392.5	367.5	392.5	418.5	468.5	500.5	560.5	573.5	603.5	641.5	666.5	693.0	753.0	798.5
LBL	379.0	419.0	436.0	471.0	440.5	465.5	523.0	573.0	616.5	676.5	702.5	732.5	788.5	813.5	921.0	981.0	1 023.5

④ DIN 332

⑤ Feather key/keyway DIN 6885-1

1) AD depends on the motor options, for other dimensions see page 8/36.

© Siemens AG 2017

3

DF/ZF129 gearbox in a flange-mounted design

DZF030

DF/ZF129

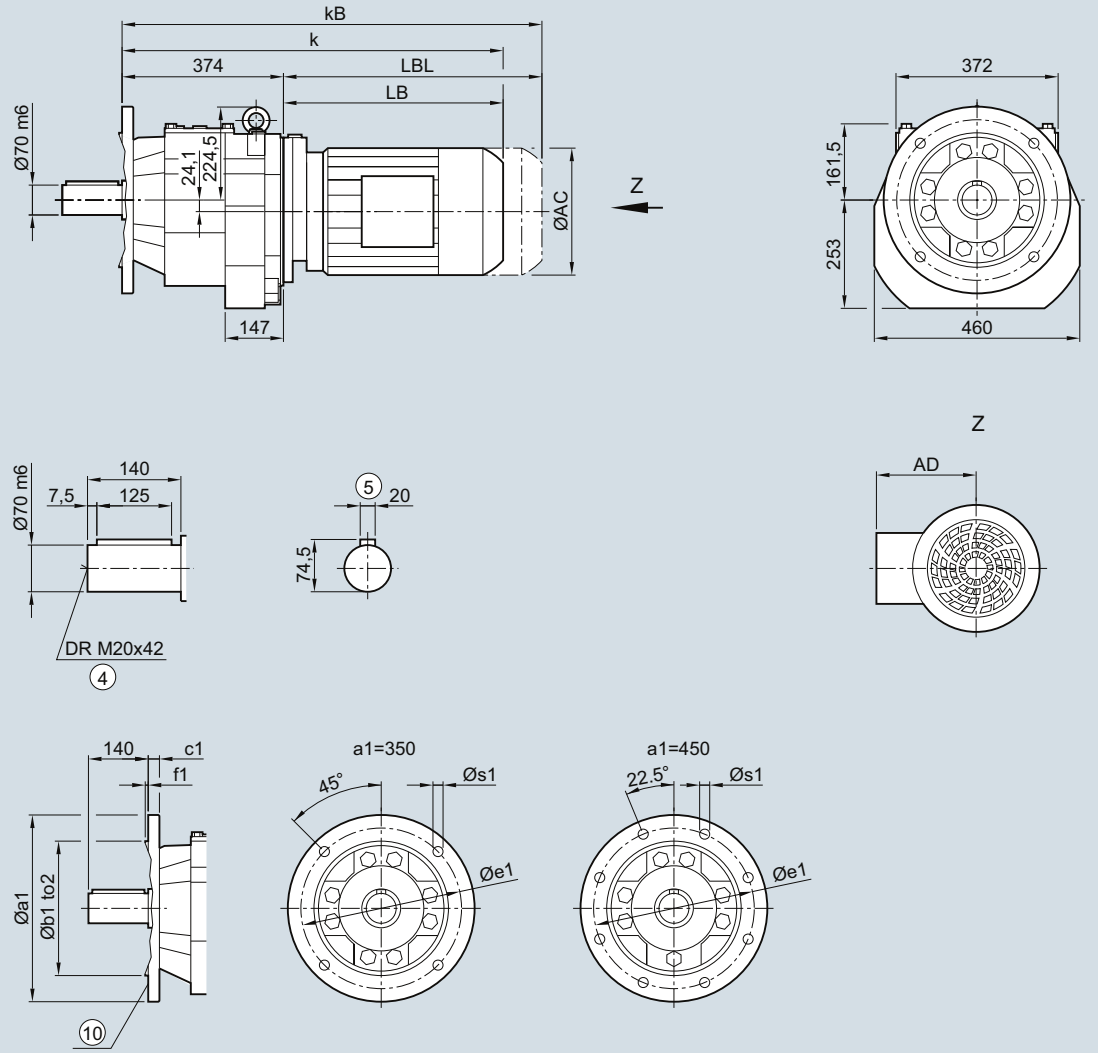

Flange	a1	b1	to2	c1	e1	f1	s1
	350	250	h6	20	300	5	17.5
	450	350	h6	22	400	5	17.5

Motor	LE 90S	90Z	100	100Z	112	112Z	132	132Z	160	160Z	LES 180	180Z	200	200Z	225	225Y	250
AC	173.8	173.8	198.0	198.0	222.0	222.0	264.0	264.0	318.0	318.0	352.5	352.5	392.5	392.5	439.0	439.0	487.0
AD[1)]	154.2	154.2	170.5	170.5	181.5	181.5	207.0	207.0	241.0	241.0	292.0	292.0	315.0	315.0	337.0	337.0	407.5
k	683.0	723.0	731.5	766.5	741.5	766.5	792.5	842.5	874.5	934.5	947.5	977.5	1 015.5	1 040.5	1 067.0	1 127.0	1 172.5
kB	753.0	793.0	810.0	845.0	814.5	839.5	897.0	947.0	990.5	1 050.5	1 076.5	1 106.5	1 162.5	1 187.5	1 295.0	1 355.0	1 397.5
LB	309.0	349.0	357.5	392.5	367.5	392.5	418.5	468.5	500.5	560.5	573.5	603.5	641.5	666.5	693.0	753.0	798.5
LBL	379.0	419.0	436.0	471.0	440.5	465.5	523.0	573.0	616.5	676.5	702.5	732.5	788.5	813.5	921.0	981.0	1 023.5

④ DIN 332
⑤ Feather key/keyway DIN 6885-1
1) AD depends on the motor options, for other dimensions see page 8/36.
⑩ For inner contour see page 3/164

© Siemens AG 2017

DZ/ZZ129 gearbox in a housing flange design

DZZ030

DZ/ZZ129

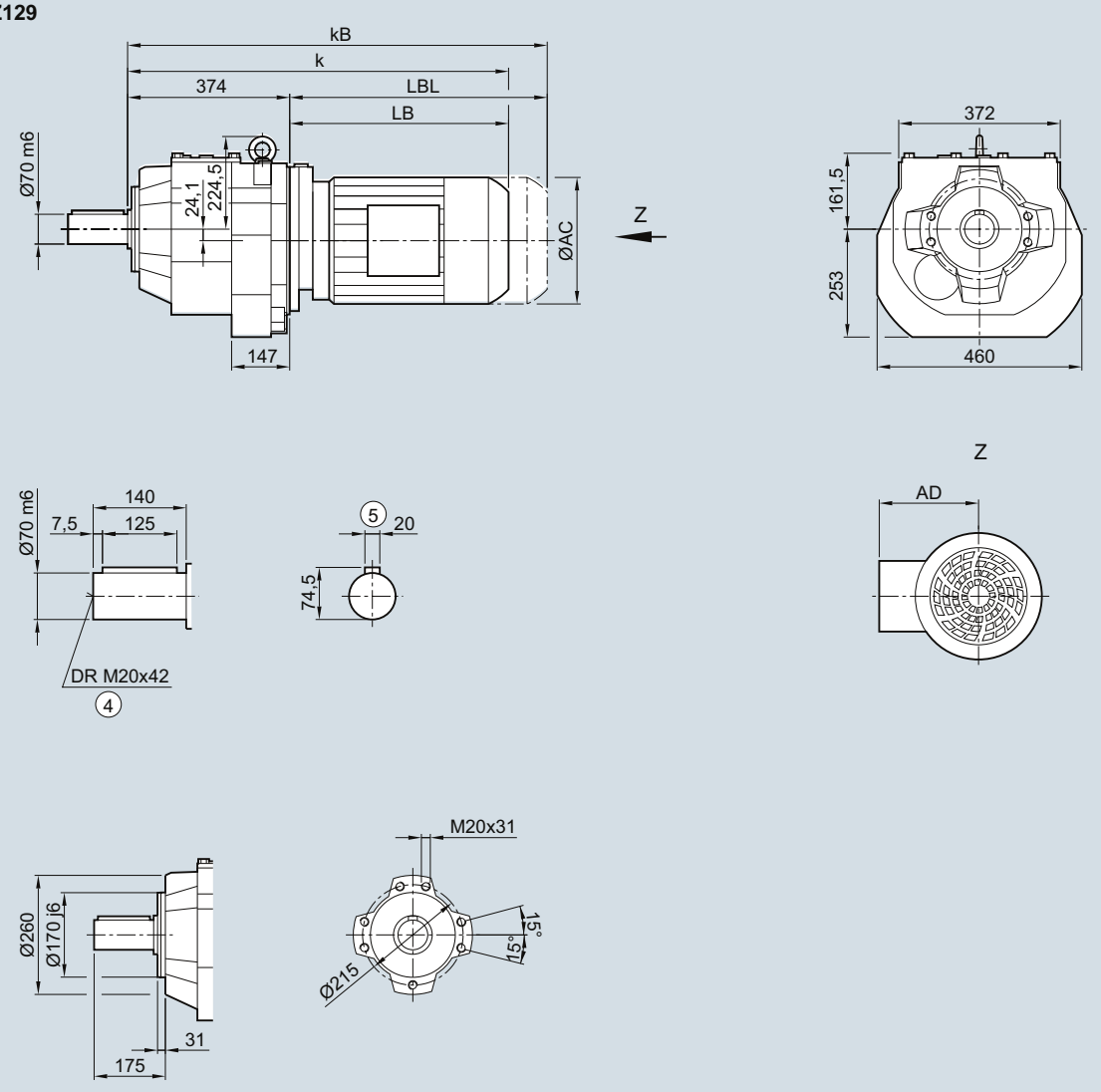

Motor	LE 90S	90Z	100	100Z	112	112Z	132	132Z	160	160Z	LES 180	180Z	200	200Z	225	225Y	250
AC	173.8	173.8	198.0	198.0	222.0	222.0	264.0	264.0	318.0	318.0	352.5	352.5	392.5	392.5	439.0	439.0	487.0
AD[1)]	154.2	154.2	170.5	170.5	181.5	181.5	207.0	207.0	241.0	241.0	292.0	292.0	315.0	315.0	337.0	337.0	407.5
k	683.0	723.0	731.5	766.5	741.5	766.5	792.5	842.5	874.5	934.5	947.5	977.5	1 015.5	1 040.5	1 067.0	1 127.0	1 172.5
kB	753.0	793.0	810.0	845.0	814.5	839.5	897.0	947.0	990.5	1 050.5	1 076.5	1 106.5	1 162.5	1 187.5	1 295.0	1 355.0	1 397.5
LB	309.0	349.0	357.5	392.5	367.5	392.5	418.5	468.5	500.5	560.5	573.5	603.5	641.5	666.5	693.0	753.0	798.5
LBL	379.0	419.0	436.0	471.0	440.5	465.5	523.0	573.0	616.5	676.5	702.5	732.5	788.5	813.5	921.0	981.0	1 023.5

④ DIN 332

⑤ Feather key/keyway DIN 6885-1

1) AD depends on the motor options, for other dimensions see page 8/36.

© Siemens AG 2017

3

D/Z149 gearbox in a foot-mounted design

DZ030

D/Z149

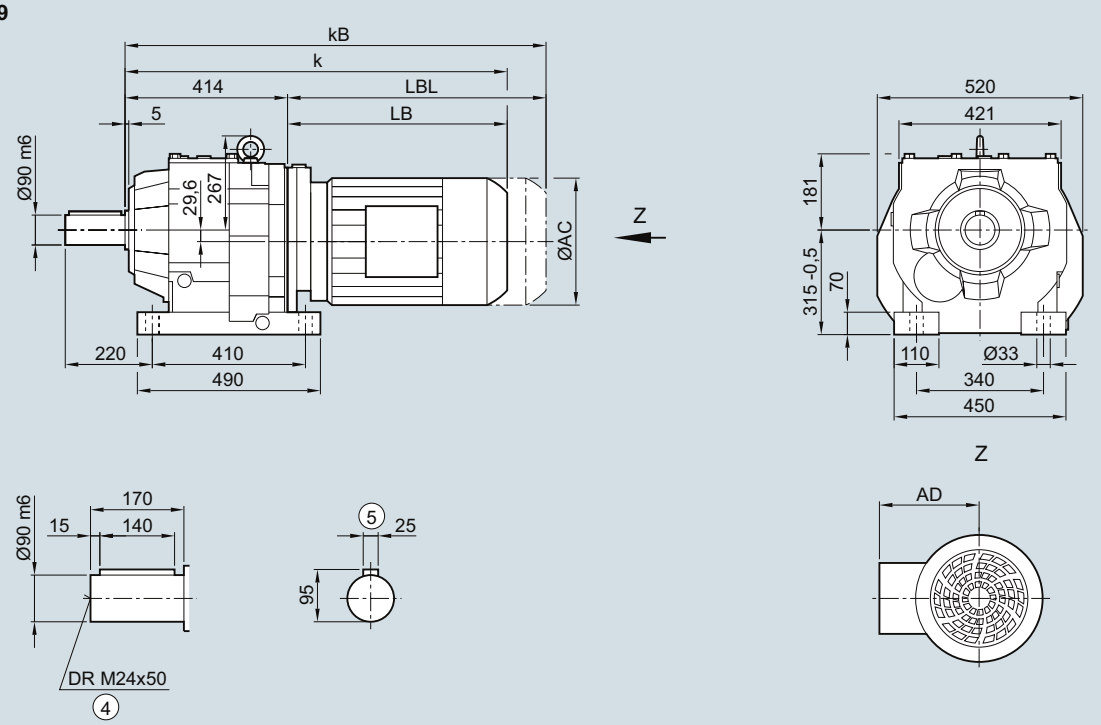

Motor	LE								LES						
	100	100Z	112	112Z	132	132Z	160	160Z	180	180Z	200	200Z	225	225Y	250
AC	198.0	198.0	222.0	222.0	264.0	264.0	318.0	318.0	352.5	352.5	392.5	392.5	439.0	439.0	487.0
AD[1)]	170.5	170.5	181.5	181.5	207.0	207.0	241.0	241.0	292.0	292.0	315.0	315.0	337.0	337.0	407.5
k	770.0	805.0	780.0	805.0	826.0	876.0	908.0	968.0	981.0	1 011.0	1 049.0	1 074.0	1 094.5	1 154.5	1 206.0
kB	848.5	883.5	853.0	878.0	930.5	980.5	1 024.0	1 084.0	1 110.0	1 140.0	1 196.0	1 221.0	1 322.5	1 382.5	1 431.0
LB	356.0	391.0	366.0	391.0	412.0	462.0	494.0	554.0	567.0	597.0	635.0	660.0	680.5	740.5	792.0
LBL	434.5	469.5	439.0	464.0	516.5	566.5	610.0	670.0	696.0	726.0	782.0	807.0	908.5	968.5	1 017.0

④ DIN 332

⑤ Feather key/keyway DIN 6885-1

1) AD depends on the motor options, for other dimensions see page 8/36.

© Siemens AG 2017

DF/ZF149 gearbox in a flange-mounted design

DZF030

DF/ZF149

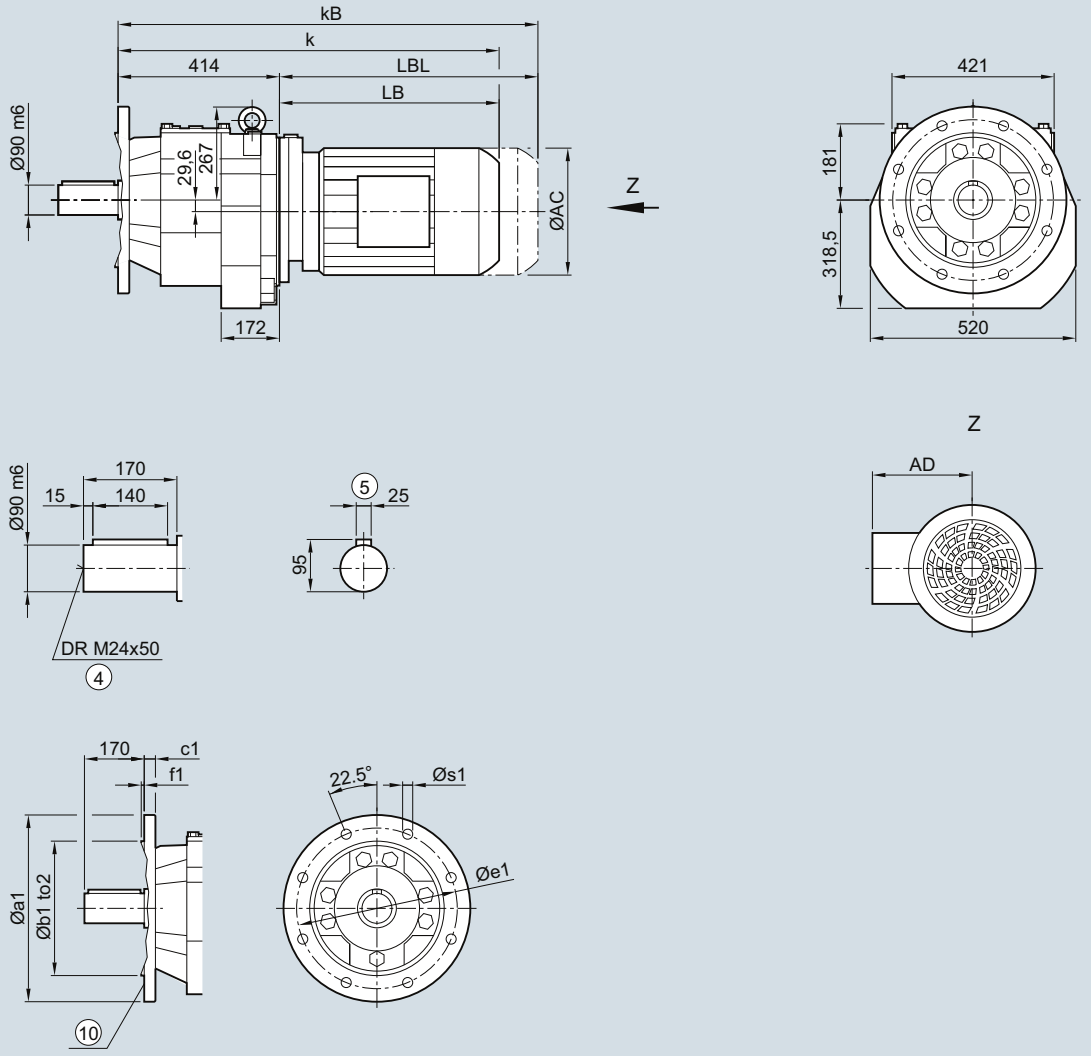

Flange	a1	b1	to2	c1	e1	f1	s1
	450	350	h6	22	400	5	17.5
	550	450	h6	25	500	5	17.5

Motor	LE								LES						
	100	100Z	112	112Z	132	132Z	160	160Z	180	180Z	200	200Z	225	225Y	250
AC	198.0	198.0	222.0	222.0	264.0	264.0	318.0	318.0	352.5	352.5	392.5	392.5	439.0	439.0	487.0
AD[1)]	170.5	170.5	181.5	181.5	207.0	207.0	241.0	241.0	292.0	292.0	315.0	315.0	337.0	337.0	407.5
k	770.0	805.0	780.0	805.0	826.0	876.0	908.0	968.0	981.0	1 011.0	1 049.0	1 074.0	1 094.5	1 154.5	1 206.0
kB	848.5	883.5	853.0	878.0	930.5	980.5	1 024.0	1 084.0	1 110.0	1 140.0	1 196.0	1 221.0	1 322.5	1 382.5	1 431.0
LB	356.0	391.0	366.0	391.0	412.0	462.0	494.0	554.0	567.0	597.0	635.0	660.0	680.5	740.5	792.0
LBL	434.5	469.5	439.0	464.0	516.5	566.5	610.0	670.0	696.0	726.0	782.0	807.0	908.5	968.5	1 017.0

④ DIN 332
1) AD depends on the motor options, for other dimensions see page 8/36.
⑤ Feather key/keyway DIN 6885-1
⑩ For inner contour see page 3/164

© Siemens AG 2017

D/Z169 gearbox in a foot-mounted design

DZ030

D/Z169

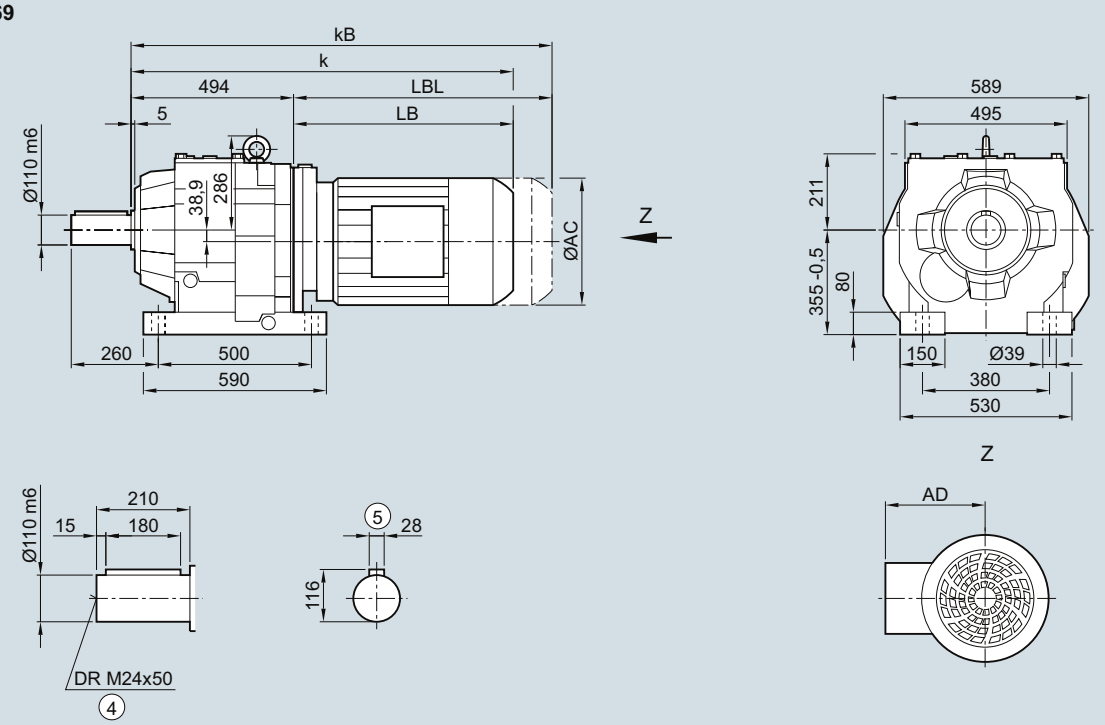

Motor	LE						LES						
	112	112Z	132	132Z	160	160Z	180	180Z	200	200Z	225	225Y	250
AC	222.0	222.0	264.0	264.0	318.0	318.0	352.5	352.5	392.5	392.5	439.0	439.0	487.0
AD[1)]	181.5	181.5	207.0	207.0	241.0	241.0	292.0	292.0	315.0	315.0	337.0	337.0	407.5
k	847.5	872.5	893.0	943.0	975.0	1 035.0	1 047.5	1 077.5	1 115.5	1 140.5	1 160.0	1 220.0	1 267.5
kB	920.5	945.5	997.5	1 047.5	1 091.0	1 151.0	1 176.5	1 206.5	1 262.5	1 287.5	1 388.0	1 448.0	1 492.5
LB	353.5	378.5	399.0	449.0	481.0	541.0	553.5	583.5	621.5	646.5	666.0	726.0	773.5
LBL	426.5	451.5	503.5	553.5	597.0	657.0	682.5	712.5	768.5	793.5	894.0	954.0	998.5

④ DIN 332
⑤ Feather key/keyway DIN 6885-1
1) AD depends on the motor options, for other dimensions see page 8/36.

© Siemens AG 2017

DF/ZF169 gearbox in a flange-mounted design

DZF030

DF/ZF169

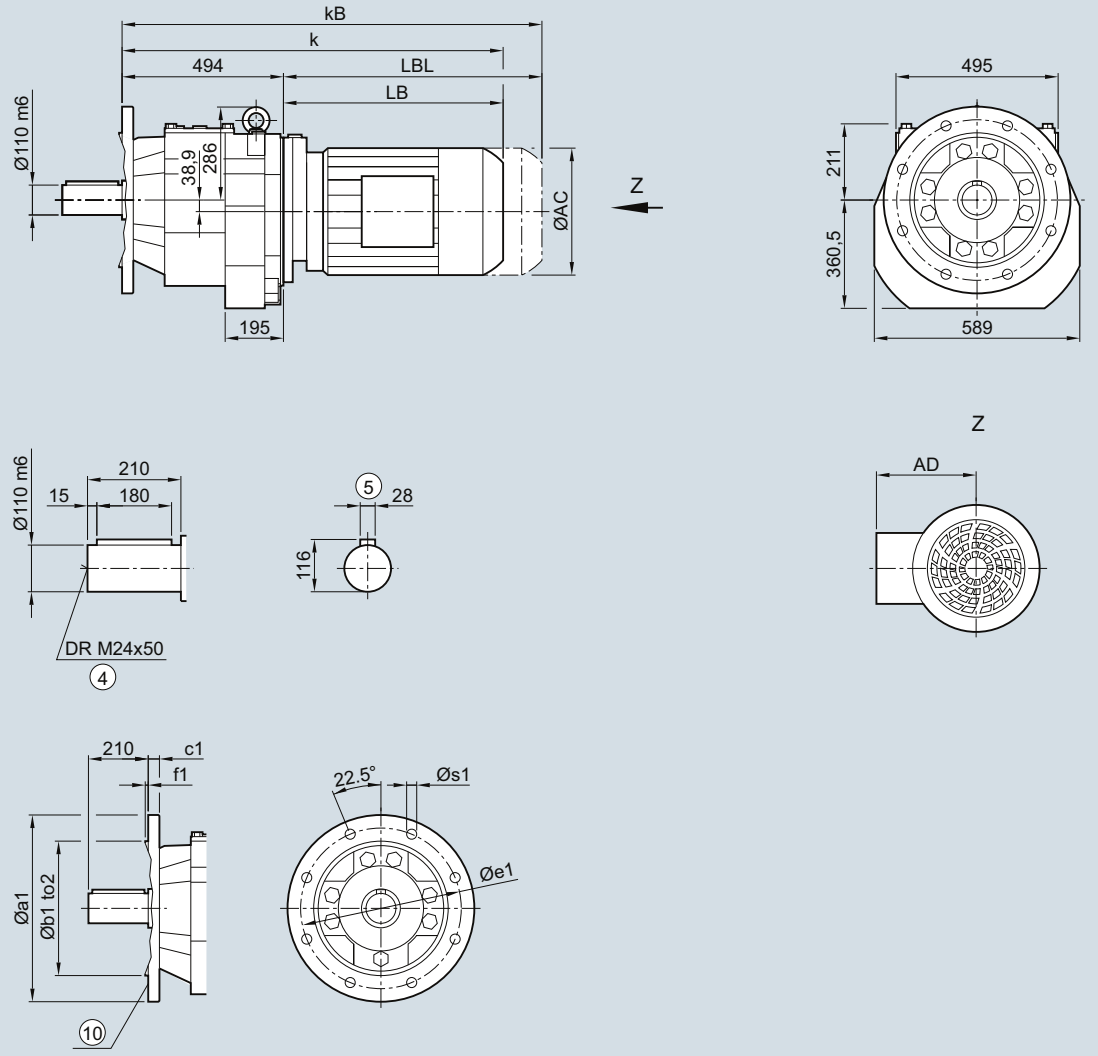

Flange	a1	b1	to2	c1	e1	f1	s1
	450	350	h6	22	400	5	17.5
	550	450	h6	25	500	5	17.5

Motor	LE						LES						
	112	112Z	132	132Z	160	160Z	180	180Z	200	200Z	225	225Y	250
AC	222.0	222.0	264.0	264.0	318.0	318.0	352.5	352.5	392.5	392.5	439.0	439.0	487.0
AD[1)]	181.5	181.5	207.0	207.0	241.0	241.0	292.0	292.0	315.0	315.0	337.0	337.0	407.5
k	847.5	872.5	893.0	943.0	975.0	1 035.0	1 047.5	1 077.5	1 115.5	1 140.5	1 160.0	1 220.0	1 267.5
kB	920.5	945.5	997.5	1 047.5	1 091.0	1 151.0	1 176.5	1 206.5	1 262.5	1 287.5	1 388.0	1 448.0	1 492.5
LB	353.5	378.5	399.0	449.0	481.0	541.0	553.5	583.5	621.5	646.5	666.0	726.0	773.5
LBL	426.5	451.5	503.5	553.5	597.0	657.0	682.5	712.5	768.5	793.5	894.0	954.0	998.5

④ DIN 332
1) AD depends on the motor options, for other dimensions see page 8/36.
⑤ Feather key/keyway DIN 6885-1
⑩ For inner contour see page 3/164

© Siemens AG 2017

D/Z189 gearbox in a foot-mounted design

DZ030

D/Z189

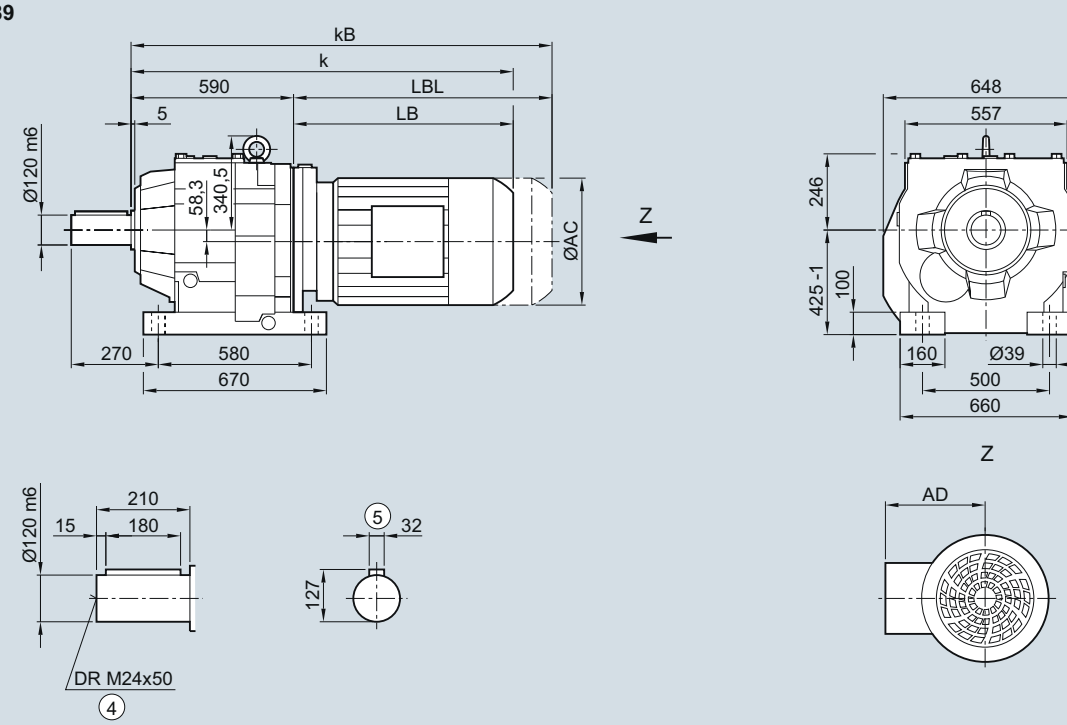

Motor	LE 112	112Z	132	132Z	160	160Z	LES 180	180Z	200	200Z	225	225Y	250
AC	222.0	222.0	264.0	264.0	318.0	318.0	352.5	352.5	392.5	392.5	439.0	439.0	487.0
AD[1)]	181.5	181.5	207.0	207.0	241.0	241.0	292.0	292.0	315.0	315.0	337.0	337.0	407.5
k	943.5	968.5	989.0	1 039.0	1 071.0	1 131.0	1 143.5	1 173.5	1 211.5	1 236.5	1 256.0	1 316.0	1 363.5
kB	1 016.5	1 041.5	1 093.5	1 143.5	1 187.0	1 247.0	1 272.5	1 302.5	1 358.5	1 383.5	1 484.0	1 544.0	1 588.5
LB	353.5	378.5	399.0	449.0	481.0	541.0	553.5	583.5	621.5	646.5	666.0	726.0	773.5
LBL	426.5	451.5	503.5	553.5	597.0	657.0	682.5	712.5	768.5	793.5	894.0	954.0	998.5

④ DIN 332

⑤ Feather key/keyway DIN 6885-1

1) AD depends on the motor options, for other dimensions see page 8/36.

© Siemens AG 2017

DF/ZF189 gearbox in a flange-mounted design

DZF030

DF/ZF189

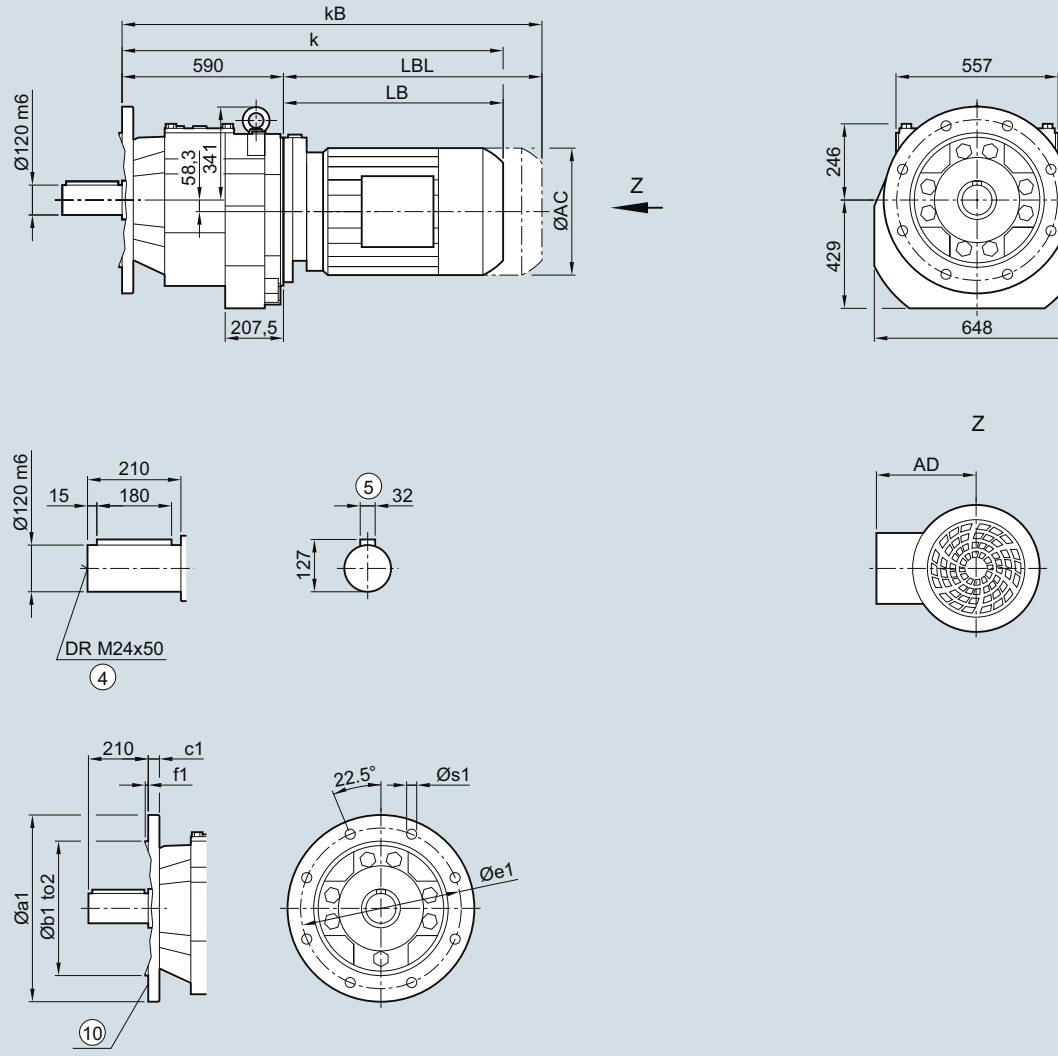

Flange	a1	b1	to2	c1	e1	f1	s1
	550	450	h6	25	500	5	17.5
	660	550	h6	28	600	6	22.0

Motor	LE						LES						
	112	112Z	132	132Z	160	160Z	180	180Z	200	200Z	225	225Y	250
AC	222.0	222.0	264.0	264.0	318.0	318.0	352.5	352.5	392.5	392.5	439.0	439.0	487.0
AD[1)]	181.5	181.5	207.0	207.0	241.0	241.0	292.0	292.0	315.0	315.0	337.0	337.0	407.5
k	943.5	968.5	989.0	1 039.0	1 071.0	1 131.0	1 143.5	1 173.5	1 211.5	1 236.5	1 256.0	1 316.0	1 363.5
kB	1 016.5	1 041.5	1 093.5	1 143.5	1 187.0	1 247.0	1 272.5	1 302.5	1 358.5	1 383.5	1 484.0	1 544.0	1 588.5
LB	353.5	378.5	399.0	449.0	481.0	541.0	553.5	583.5	621.5	646.5	666.0	726.0	773.5
LBL	426.5	451.5	503.5	553.5	597.0	657.0	682.5	712.5	768.5	793.5	894.0	954.0	998.5

④ DIN 332
1) AD depends on the motor options, for other dimensions see page 8/36.
⑤ Feather key/keyway DIN 6885-1
⑩ For inner contour see page 3/164

© Siemens AG 2017

E39 gearbox in a foot-mounted design

E030

E39

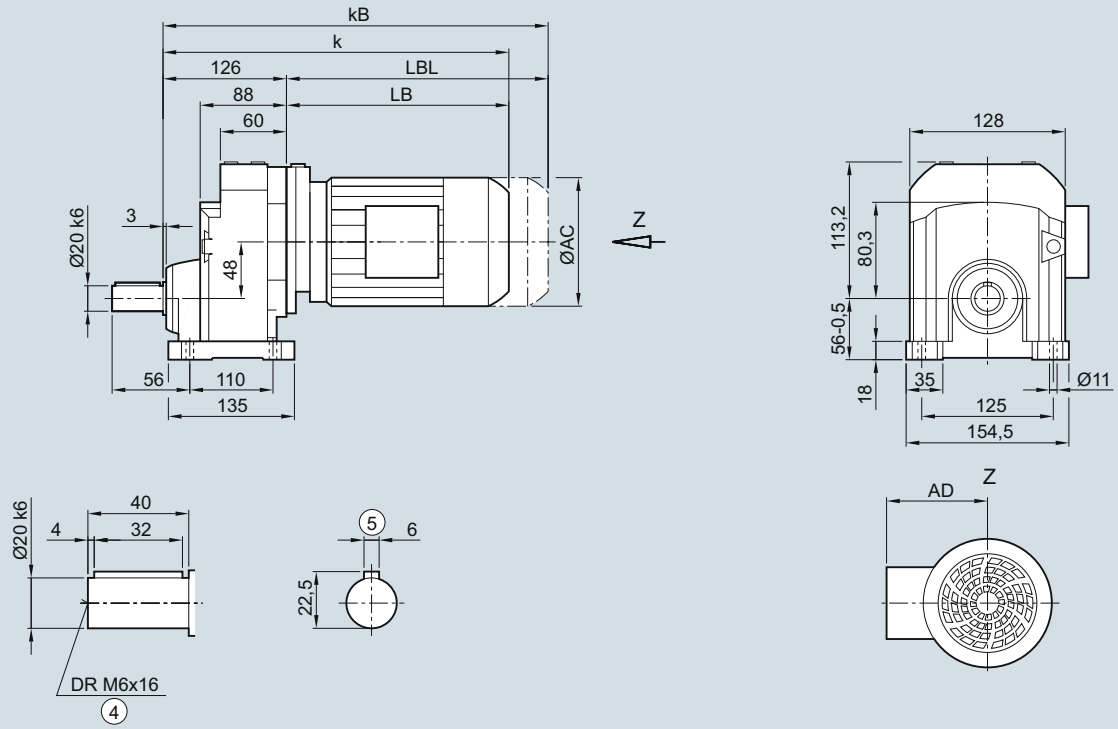

Motor	LA			LE							
	63	71	71Z	80	80Z	90	90Z	100	100Z	112	112Z
AC	117.8	138.8	138.8	156.3	156.3	173.8	173.8	198.0	198.0	222.0	222.0
AD[1)]	124.0	134.0	134.0	149.2	149.2	154.2	154.2	170.5	170.5	181.5	181.5
k	320.0	352.0	371.0	416.0	451.0	477.5	517.5	534.0	569.0	544.0	569.0
kB	364.5	407.0	426.0	476.0	511.0	547.5	587.5	612.5	647.5	617.0	642.0
LB	194.0	226.0	245.0	290.0	325.0	351.5	391.5	408.0	443.0	418.0	443.0
LBL	238.5	281.0	300.0	350.0	385.0	421.5	461.5	486.5	521.5	491.0	516.0

④ DIN 332

⑤ Feather key/keyway DIN 6885-1

1) AD depends on the motor options, for other dimensions see page 8/36.

© Siemens AG 2017

EF39 gearbox in a flange-mounted design

EF030

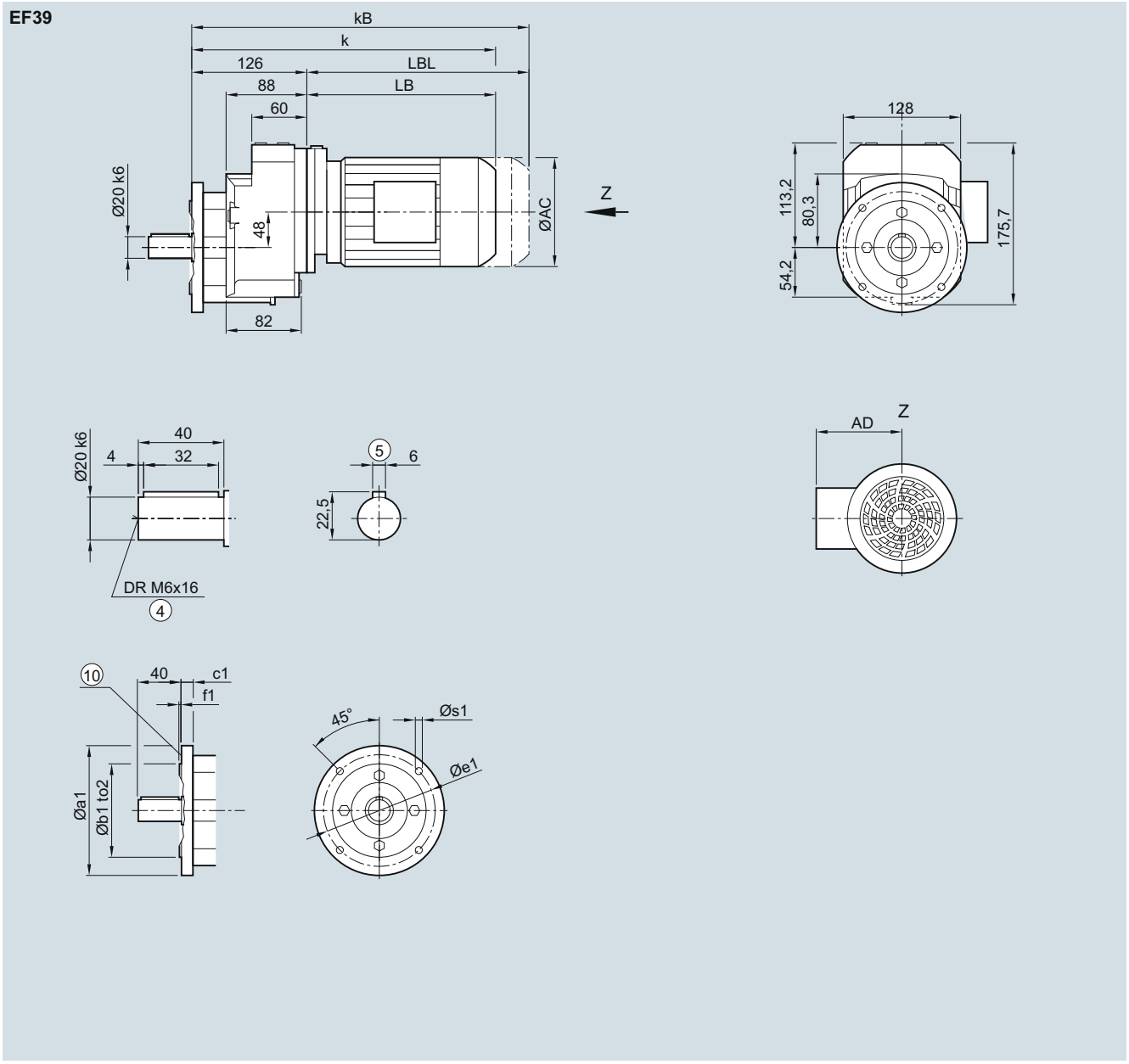

Flange	a1	b1	to2	c1	e1	f1	s1
	120	80	j6	8	100	3.0	6.8
	140	95	j6	7	115	3.0	9.0
	160	110	j6	10	130	3.5	9.0
	200	130	j6	12	165	3.5	11.0

Motor	LA			LE							
	63	71	71Z	80	80Z	90	90Z	100	100Z	112	112Z
AC	117.8	138.8	138.8	156.3	156.3	173.8	173.8	198.0	198.0	222.0	222.0
AD[1)]	124.0	134.0	134.0	149.2	149.2	154.2	154.2	170.5	170.5	181.5	181.5
k	320.0	352.0	371.0	416.0	451.0	477.5	517.5	534.0	569.0	544.0	569.0
kB	364.5	407.0	426.0	476.0	511.0	547.5	587.5	612.5	647.5	617.0	642.0
LB	194.0	226.0	245.0	290.0	325.0	351.5	391.5	408.0	443.0	418.0	443.0
LBL	238.5	281.0	300.0	350.0	385.0	421.5	461.5	486.5	521.5	491.0	516.0

④ DIN 332
1) AD depends on the motor options, for other dimensions see page 8/36.
⑤ Feather key/keyway DIN 6885-1
⑩ For inner contour see page 3/164

© Siemens AG 2017

3

EZ39 gearbox in a housing flange design

EZ030

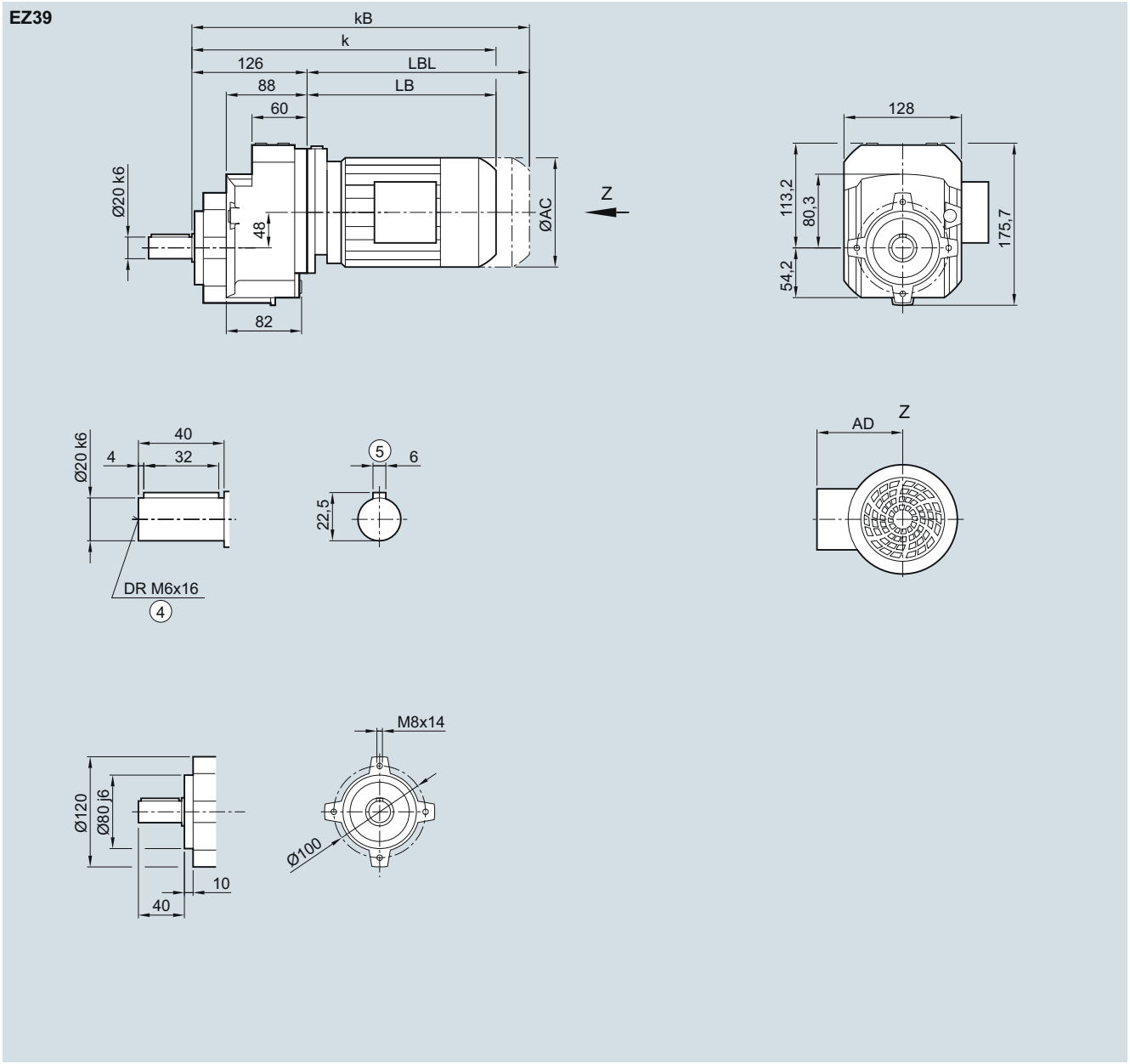

Motor	LA			LE							
	63	71	71Z	80	80Z	90	90Z	100	100Z	112	112Z
AC	117.8	138.8	138.8	156.3	156.3	173.8	173.8	198.0	198.0	222.0	222.0
AD[1)]	124.0	134.0	134.0	149.2	149.2	154.2	154.2	170.5	170.5	181.5	181.5
k	320.0	352.0	371.0	416.0	451.0	477.5	517.5	534.0	569.0	544.0	569.0
kB	364.5	407.0	426.0	476.0	511.0	547.5	587.5	612.5	647.5	617.0	642.0
LB	194.0	226.0	245.0	290.0	325.0	351.5	391.5	408.0	443.0	418.0	443.0
LBL	238.5	281.0	300.0	350.0	385.0	421.5	461.5	486.5	521.5	491.0	516.0

④ DIN 332
⑤ Feather key/keyway DIN 6885-1
1) AD depends on the motor options, for other dimensions see page 8/36.

© Siemens AG 2017

E49 gearbox in a foot-mounted design

E030

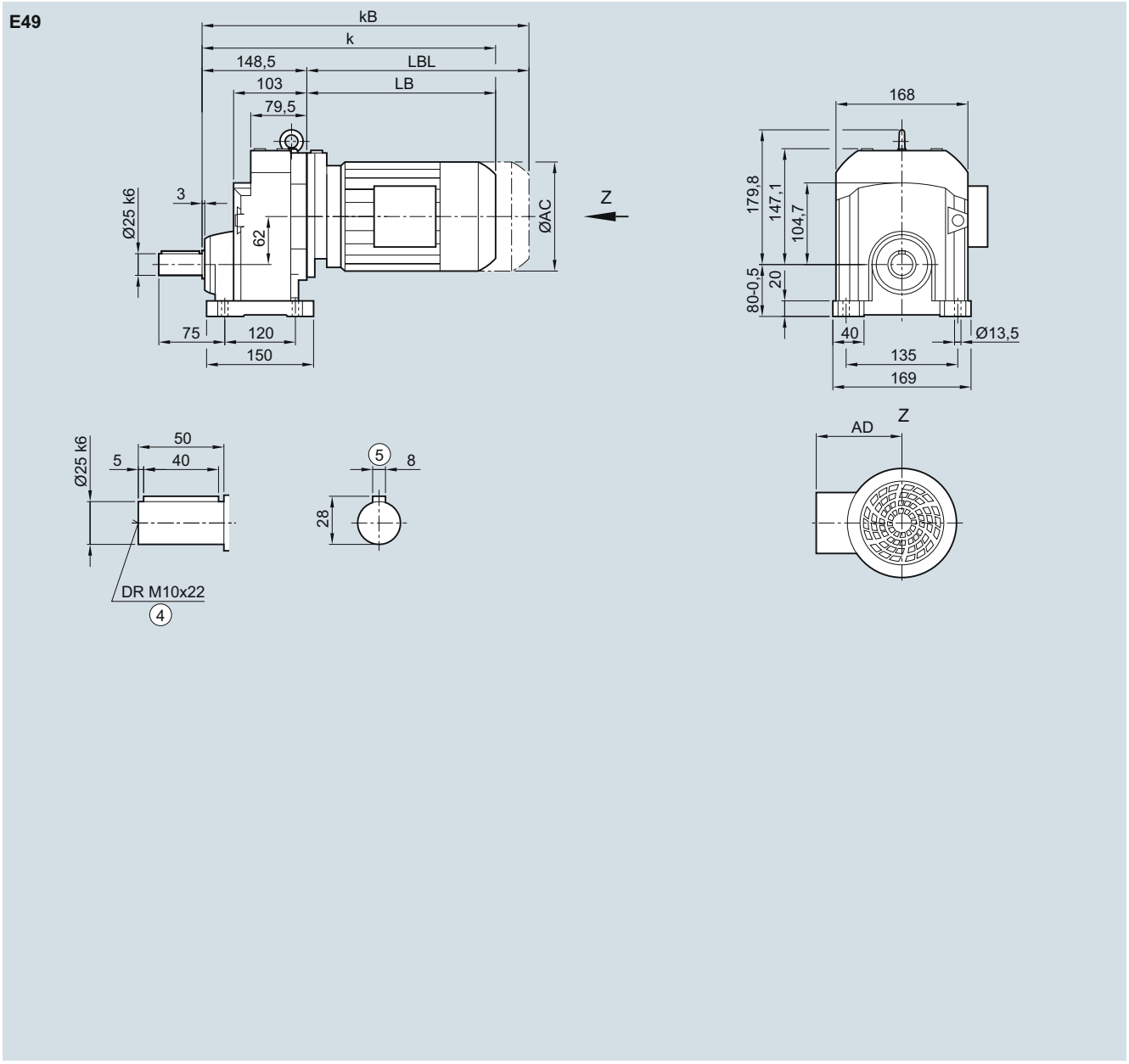

Motor	LA			LE									
	63	71	71Z	80	80Z	90	90Z	100	100Z	112	112Z	132	132Z
AC	117.8	138.8	138.8	156.3	156.3	173.8	173.8	198.0	198.0	222.0	222.0	264.0	264.0
AD[1)]	124.0	134.0	134.0	149.2	149.2	154.2	154.2	170.5	170.5	181.5	181.5	207.0	207.0
k	333.0	365.0	384.0	429.0	464.0	490.5	530.5	547.0	582.0	557.0	591.5	610.0	660.0
kB	377.5	420.0	439.0	489.0	524.0	560.5	600.5	625.5	660.5	630.0	664.5	714.5	764.5
LB	184.5	216.5	235.5	280.5	315.5	342.0	382.0	398.5	433.5	408.5	443.0	461.5	511.5
LBL	229.0	271.5	290.5	340.5	375.5	412.0	452.0	477.0	512.0	481.5	516.0	566.0	616.0

④ DIN 332

⑤ Feather key/keyway DIN 6885-1

1) AD depends on the motor options, for other dimensions see page 8/36.

© Siemens AG 2017

EF49 gearbox in a flange-mounted design

EF030

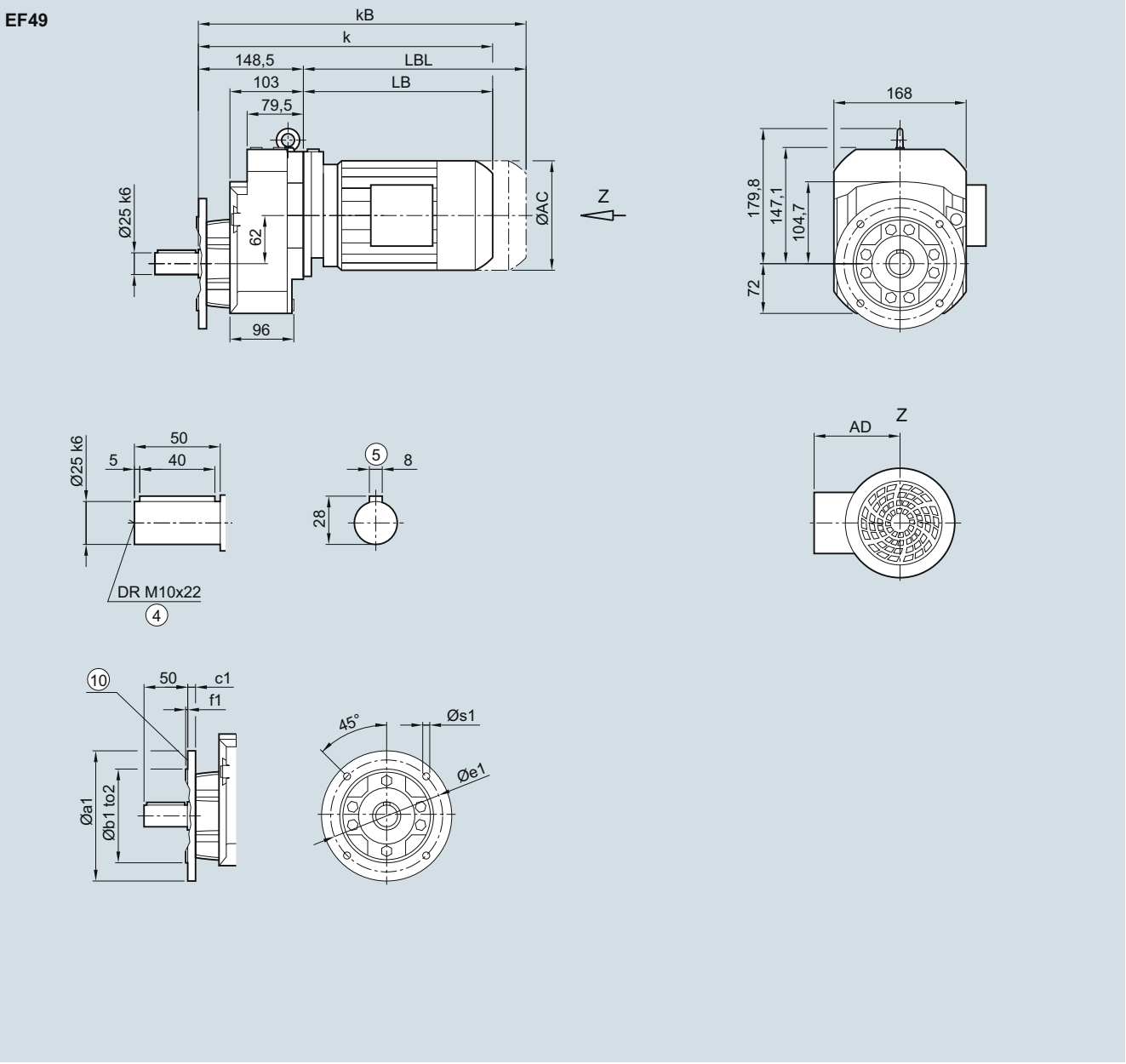

Flange	a1	b1	to2	c1	e1	f1	s1
	160	110	j6	10	130	3.5	9.0
	200	130	j6	12	165	3.5	11.0
	250	180	j6	15	215	4.0	13.5

Motor	LA			LE									
	63	71	71Z	80	80Z	90	90Z	100	100Z	112	112Z	132	132Z
AC	117.8	138.8	138.8	156.3	156.3	173.8	173.8	198.0	198.0	222.0	222.0	264.0	264.0
AD[1)]	124.0	134.0	134.0	149.2	149.2	154.2	154.2	170.5	170.5	181.5	181.5	207.0	207.0
k	333.0	365.0	384.0	429.0	464.0	490.5	530.5	547.0	582.0	557.0	591.5	610.0	660.0
kB	377.5	420.0	439.0	489.0	524.0	560.5	600.5	625.5	660.5	630.0	664.5	714.5	764.5
LB	184.5	216.5	235.5	280.5	315.5	342.0	382.0	398.5	433.5	408.5	443.0	461.5	511.5
LBL	229.0	271.5	290.5	340.5	375.5	412.0	452.0	477.0	512.0	481.5	516.0	566.0	616.0

④ DIN 332
1) AD depends on the motor options, for other dimensions see page 8/36.
⑤ Feather key/keyway DIN 6885-1
⑩ For inner contour see page 3/164

© Siemens AG 2017

EZ49 gearbox in a housing flange design

EZ030

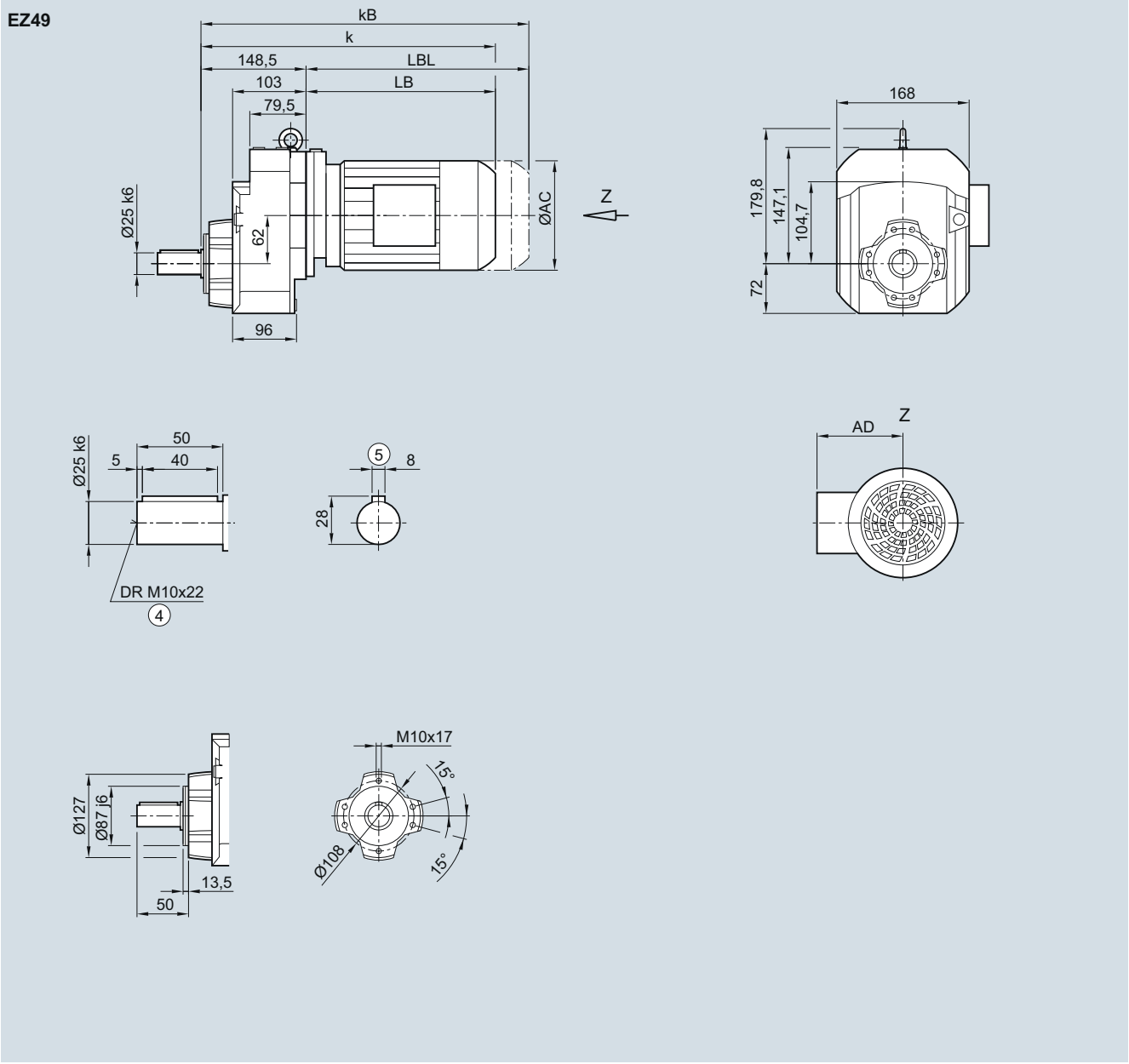

Motor	LA			LE									
	63	71	71Z	80	80Z	90	90Z	100	100Z	112	112Z	132	132Z
AC	117.8	138.8	138.8	156.3	156.3	173.8	173.8	198.0	198.0	222.0	222.0	264.0	264.0
AD[1)]	124.0	134.0	134.0	149.2	149.2	154.2	154.2	170.5	170.5	181.5	181.5	207.0	207.0
k	333.0	365.0	384.0	429.0	464.0	490.5	530.5	547.0	582.0	557.0	591.5	610.0	660.0
kB	377.5	420.0	439.0	489.0	524.0	560.5	600.5	625.5	660.5	630.0	664.5	714.5	764.5
LB	184.5	216.5	235.5	280.5	315.5	342.0	382.0	398.5	433.5	408.5	443.0	461.5	511.5
LBL	229.0	271.5	290.5	340.5	375.5	412.0	452.0	477.0	512.0	481.5	516.0	566.0	616.0

④ DIN 332

⑤ Feather key/keyway DIN 6885-1

1) AD depends on the motor options, for other dimensions see page 8/36.

© Siemens AG 2017

3

E69 gearbox in a foot-mounted design

E030

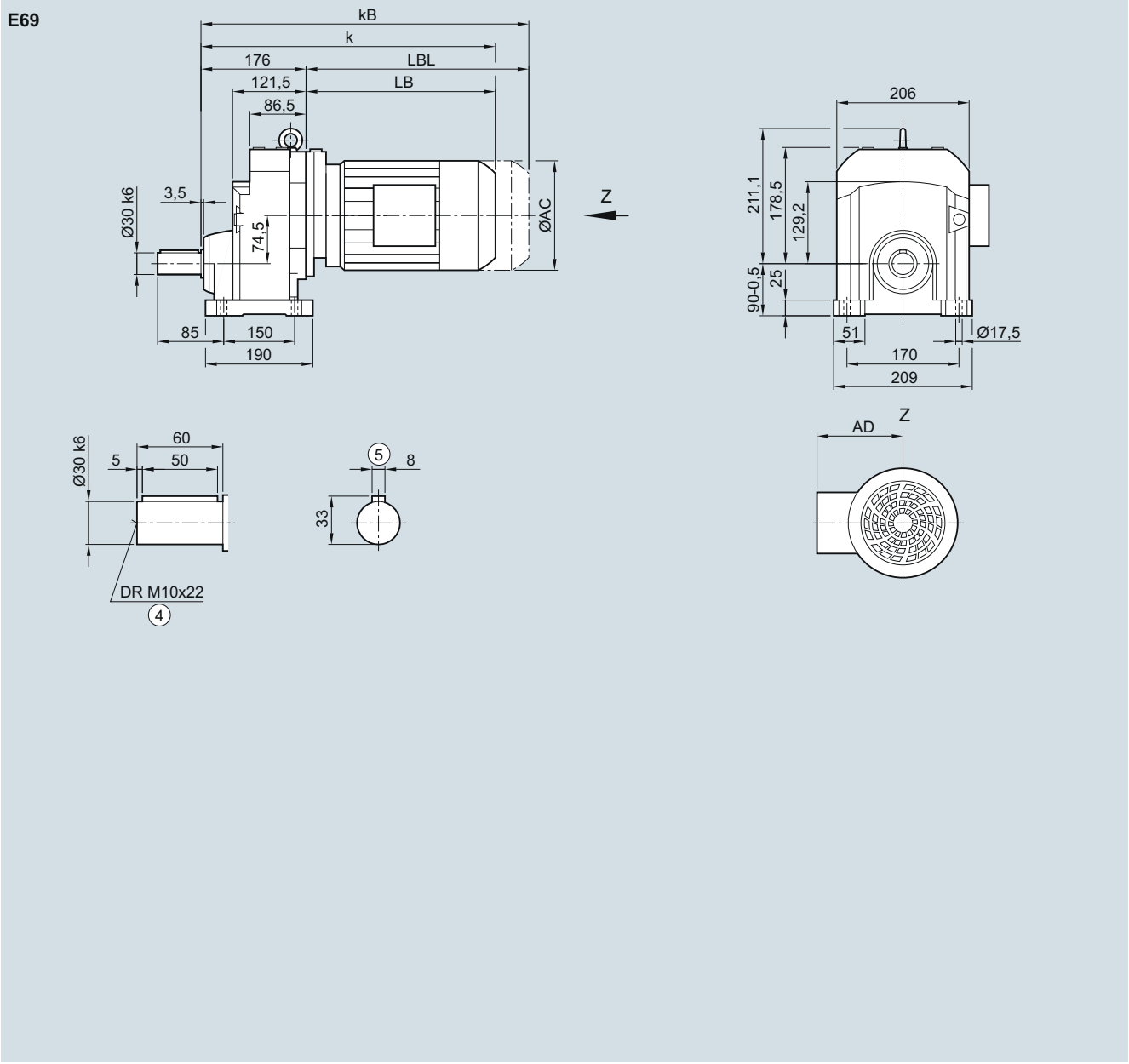

Motor	LA 71	LE 80	80Z	90	90Z	100	100Z	112	112Z	132	132Z	160	160Z
AC	138.8	138.8	156.3	156.3	173.8	173.8	198.0	198.0	222.0	222.0	264.0	264.0	318.0
AD[1)]	134.0	134.0	149.2	149.2	154.2	154.2	170.5	170.5	181.5	181.5	207.0	207.0	241.0
k	390.5	409.5	450.5	485.5	512.0	552.0	568.5	603.5	578.5	603.5	631.5	681.5	713.5
kB	445.5	464.5	510.5	545.5	582.0	622.0	647.0	682.0	651.5	676.5	736.0	786.0	829.5
LB	214.5	233.5	274.5	309.5	336.0	376.0	392.5	427.5	402.5	427.5	455.5	505.5	537.5
LBL	269.5	288.5	334.5	369.5	406.0	446.0	471.0	506.0	475.5	500.5	560.0	610.0	653.5

④ DIN 332

⑤ Feather key/keyway DIN 6885-1

1) AD depends on the motor options, for other dimensions see page 8/36.

© Siemens AG 2017

EF69 gearbox in a flange-mounted design

EF030

EF69

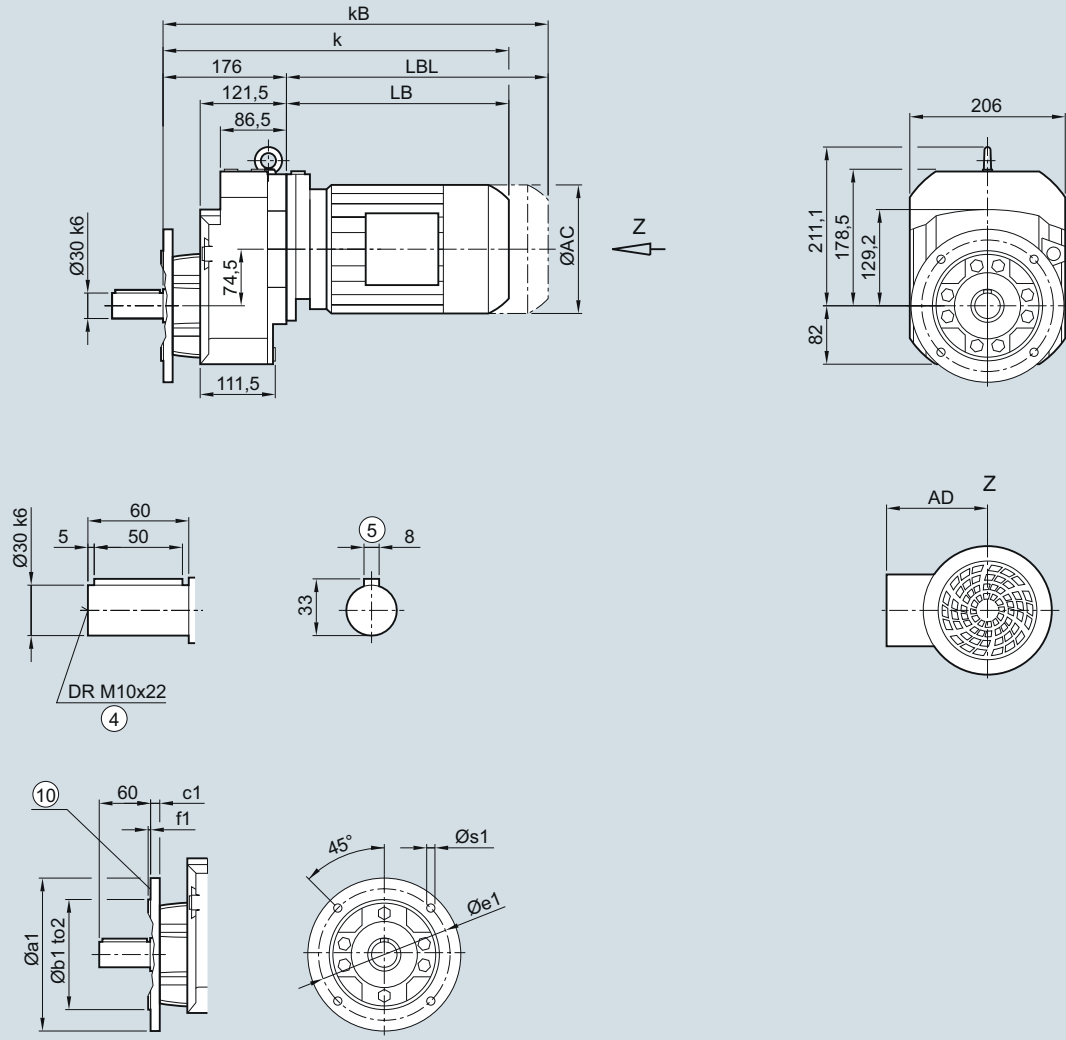

Flange	a1	b1	to2	c1	e1	f1	s1
	200	130	j6	12	165	3.5	11.0
	250	180	j6	15	215	4.0	13.5

Motor	LA 71	LE 80	80Z	90	90Z	100	100Z	112	112Z	132	132Z	160	160Z
AC	138.8	138.8	156.3	156.3	173.8	173.8	198.0	198.0	222.0	222.0	264.0	264.0	318.0
AD[1)]	134.0	134.0	149.2	149.2	154.2	154.2	170.5	170.5	181.5	181.5	207.0	207.0	241.0
k	390.5	409.5	450.5	485.5	512.0	552.0	568.5	603.5	578.5	603.5	631.5	681.5	713.5
kB	445.5	464.5	510.5	545.5	582.0	622.0	647.0	682.0	651.5	676.5	736.0	786.0	829.5
LB	214.5	233.5	274.5	309.5	336.0	376.0	392.5	427.5	402.5	427.5	455.5	505.5	537.5
LBL	269.5	288.5	334.5	369.5	406.0	446.0	471.0	506.0	475.5	500.5	560.0	610.0	653.5

④ DIN 332
1) AD depends on the motor options, for other dimensions see page 8/36.
⑤ Feather key/keyway DIN 6885-1
⑩ For inner contour see page 3/164

© Siemens AG 2017

EZ69 gearbox in a housing flange design

EZ030

EZ69

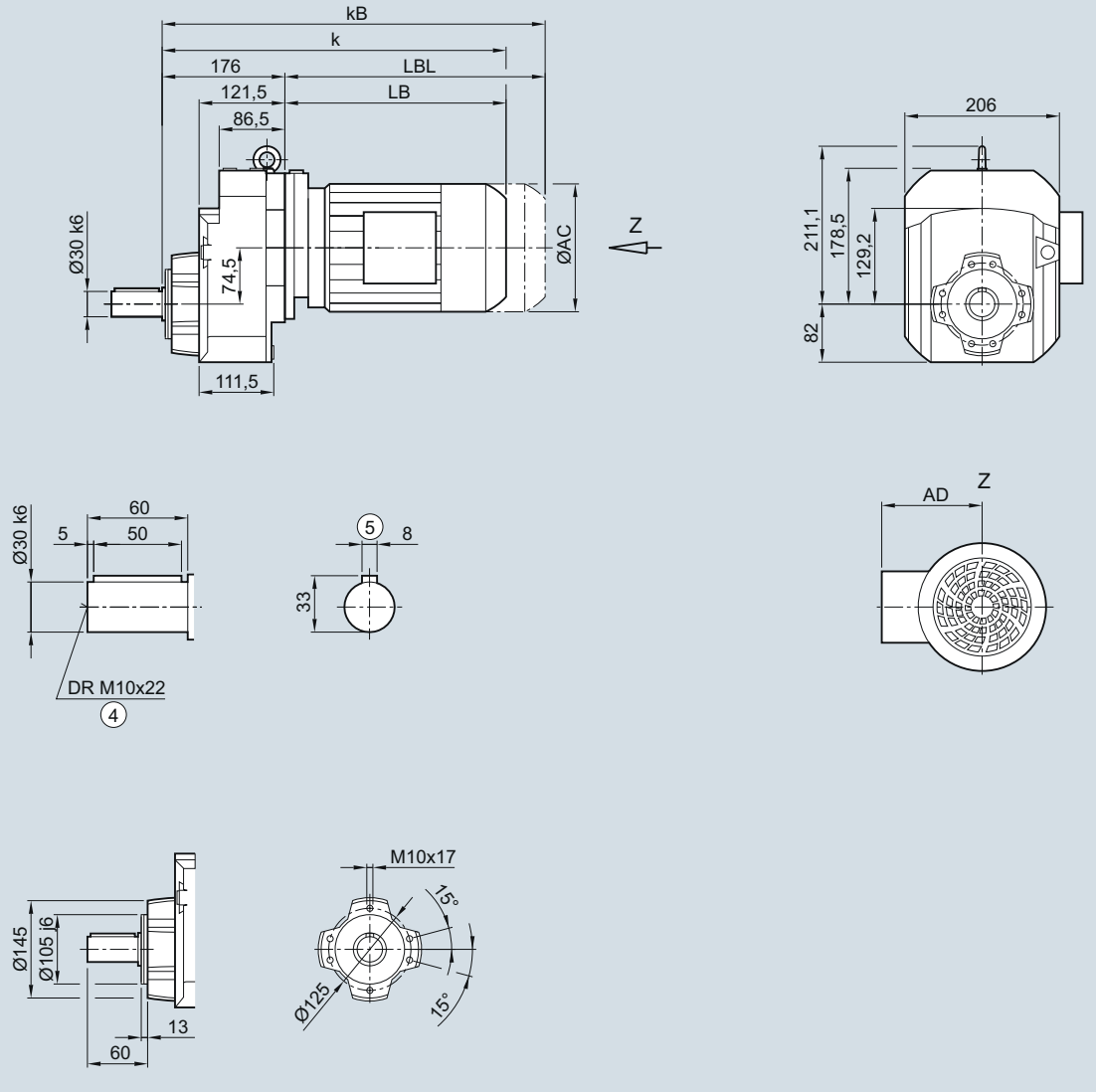

Motor	LA 71	LE 80	80Z	90	90Z	100	100Z	112	112Z	132	132Z	160	160Z
AC	138.8	138.8	156.3	156.3	173.8	173.8	198.0	198.0	222.0	222.0	264.0	264.0	318.0
AD[1)]	134.0	134.0	149.2	149.2	154.2	154.2	170.5	170.5	181.5	181.5	207.0	207.0	241.0
k	390.5	409.5	450.5	485.5	512.0	552.0	568.5	603.5	578.5	603.5	631.5	681.5	713.5
kB	445.5	464.5	510.5	545.5	582.0	622.0	647.0	682.0	651.5	676.5	736.0	786.0	829.5
LB	214.5	233.5	274.5	309.5	336.0	376.0	392.5	427.5	402.5	427.5	455.5	505.5	537.5
LBL	269.5	288.5	334.5	369.5	406.0	446.0	471.0	506.0	475.5	500.5	560.0	610.0	653.5

④ DIN 332
⑤ Feather key/keyway DIN 6885-1
1) AD depends on the motor options, for other dimensions see page 8/36.

© Siemens AG 2017

E89 gearbox in a foot-mounted design

E030

E89

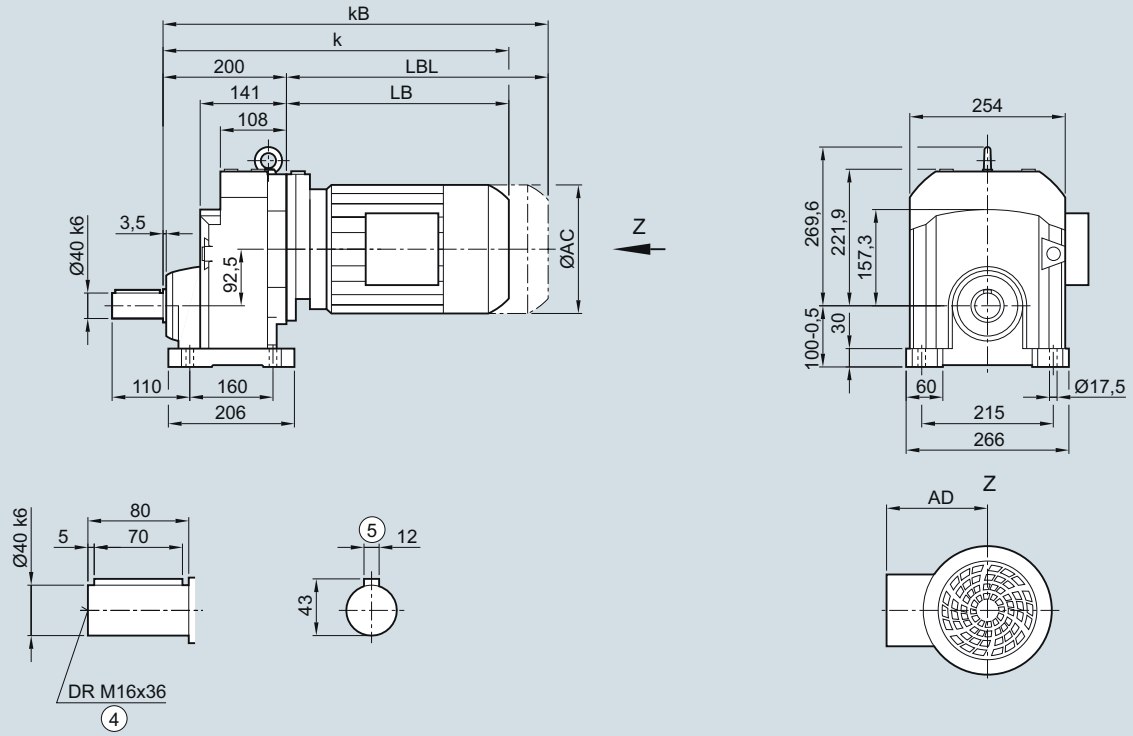

Motor	LE 80	80Z	90	90Z	100	100Z	112	112Z	132	132Z	160	160Z	LES 180	180Z
AC	156.3	156.3	173.8	173.8	198.0	198.0	222.0	222.0	264.0	264.0	318.0	318.0	352.5	352.5
AD[1)]	149.2	149.2	154.2	154.2	170.5	170.5	181.5	181.5	207.0	207.0	241.0	241.0	292.0	292.0
k	461.5	496.5	523.0	563.0	575.5	610.5	585.5	610.5	638.5	688.5	720.5	780.5	793.5	823.5
kB	521.5	556.5	593.0	633.0	654.0	689.0	658.5	683.5	743.0	793.0	836.5	896.5	922.5	952.5
LB	261.5	296.5	323.0	363.0	375.5	410.5	385.5	410.5	438.5	488.5	520.5	580.5	593.5	623.5
LBL	321.5	356.5	393.0	433.0	454.0	489.0	458.5	483.5	543.0	593.0	636.5	696.5	722.5	752.5

④ DIN 332

⑤ Feather key/keyway DIN 6885-1

1) AD depends on the motor options, for other dimensions see page 8/36.

© Siemens AG 2017

EF89 gearbox in a flange-mounted design

EF030

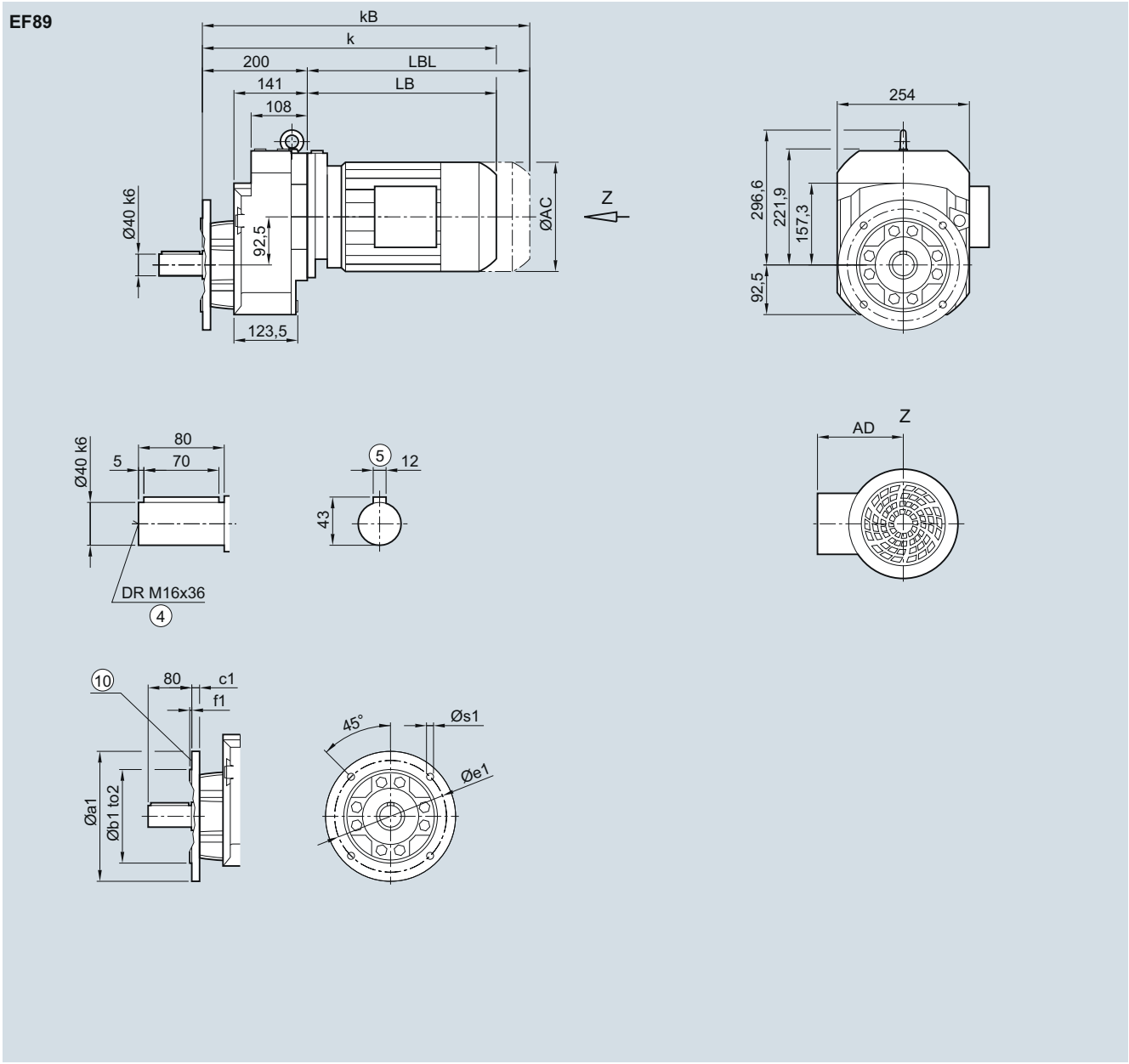

Flange	a1	b1	to2	c1	e1	f1	s1
	250	180	j6	15	215	4.0	13.5
	300	230	j6	16	265	4.0	13.5

Motor	LE 80	80Z	90	90Z	100	100Z	112	112Z	132	132Z	160	160Z	LES 180	180Z
AC	156.3	156.3	173.8	173.8	198.0	198.0	222.0	222.0	264.0	264.0	318.0	318.0	352.5	352.5
AD[1)]	149.2	149.2	154.2	154.2	170.5	170.5	181.5	181.5	207.0	207.0	241.0	241.0	292.0	292.0
k	461.5	496.5	523.0	563.0	575.5	610.5	585.5	610.5	638.5	688.5	720.5	780.5	793.5	823.5
kB	521.5	556.5	593.0	633.0	654.0	689.0	658.5	683.5	743.0	793.0	836.5	896.5	922.5	952.5
LB	261.5	296.5	323.0	363.0	375.5	410.5	385.5	410.5	438.5	488.5	520.5	580.5	593.5	623.5
LBL	321.5	356.5	393.0	433.0	454.0	489.0	458.5	483.5	543.0	593.0	636.5	696.5	722.5	752.5

④ DIN 332
⑤ Feather key/keyway DIN 6885-1
1) AD depends on the motor options, for other dimensions see page 8/36.
⑩ For inner contour see page 3/164

© Siemens AG 2017

EZ89 gearbox in a housing flange design

EZ030

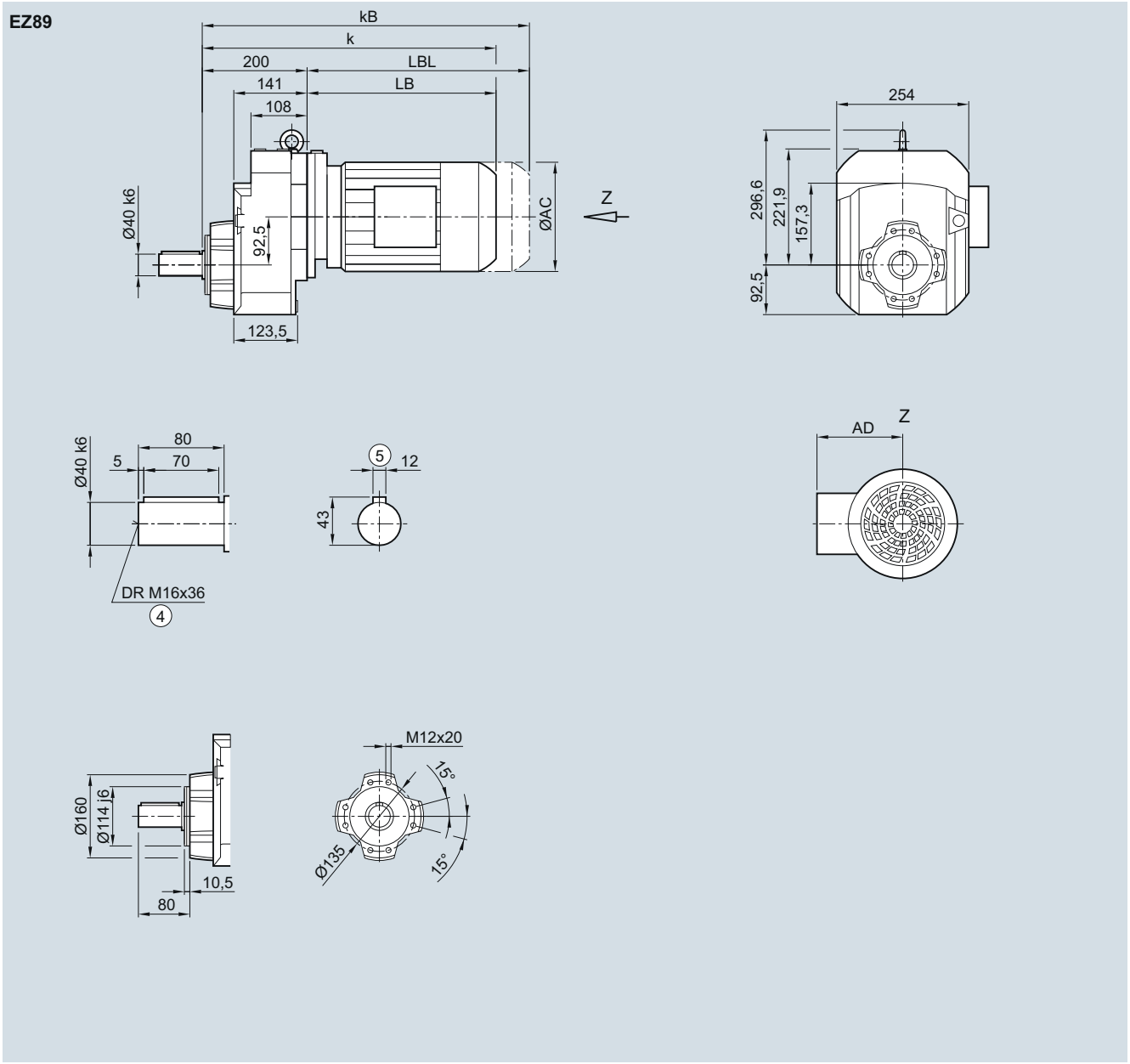

Motor	LE 80	80Z	90	90Z	100	100Z	112	112Z	132	132Z	160	160Z	LES 180	180Z
AC	156.3	156.3	173.8	173.8	198.0	198.0	222.0	222.0	264.0	264.0	318.0	318.0	352.5	352.5
AD[1)]	149.2	149.2	154.2	154.2	170.5	170.5	181.5	181.5	207.0	207.0	241.0	241.0	292.0	292.0
k	461.5	496.5	523.0	563.0	575.5	610.5	585.5	610.5	638.5	688.5	720.5	780.5	793.5	823.5
kB	521.5	556.5	593.0	633.0	654.0	689.0	658.5	683.5	743.0	793.0	836.5	896.5	922.5	952.5
LB	261.5	296.5	323.0	363.0	375.5	410.5	385.5	410.5	438.5	488.5	520.5	580.5	593.5	623.5
LBL	321.5	356.5	393.0	433.0	454.0	489.0	458.5	483.5	543.0	593.0	636.5	696.5	722.5	752.5

④ DIN 332

⑤ Feather key/keyway DIN 6885-1

1) AD depends on the motor options, for other dimensions see page 8/36.

© Siemens AG 2017

3

E109 gearbox in a foot-mounted design

E030

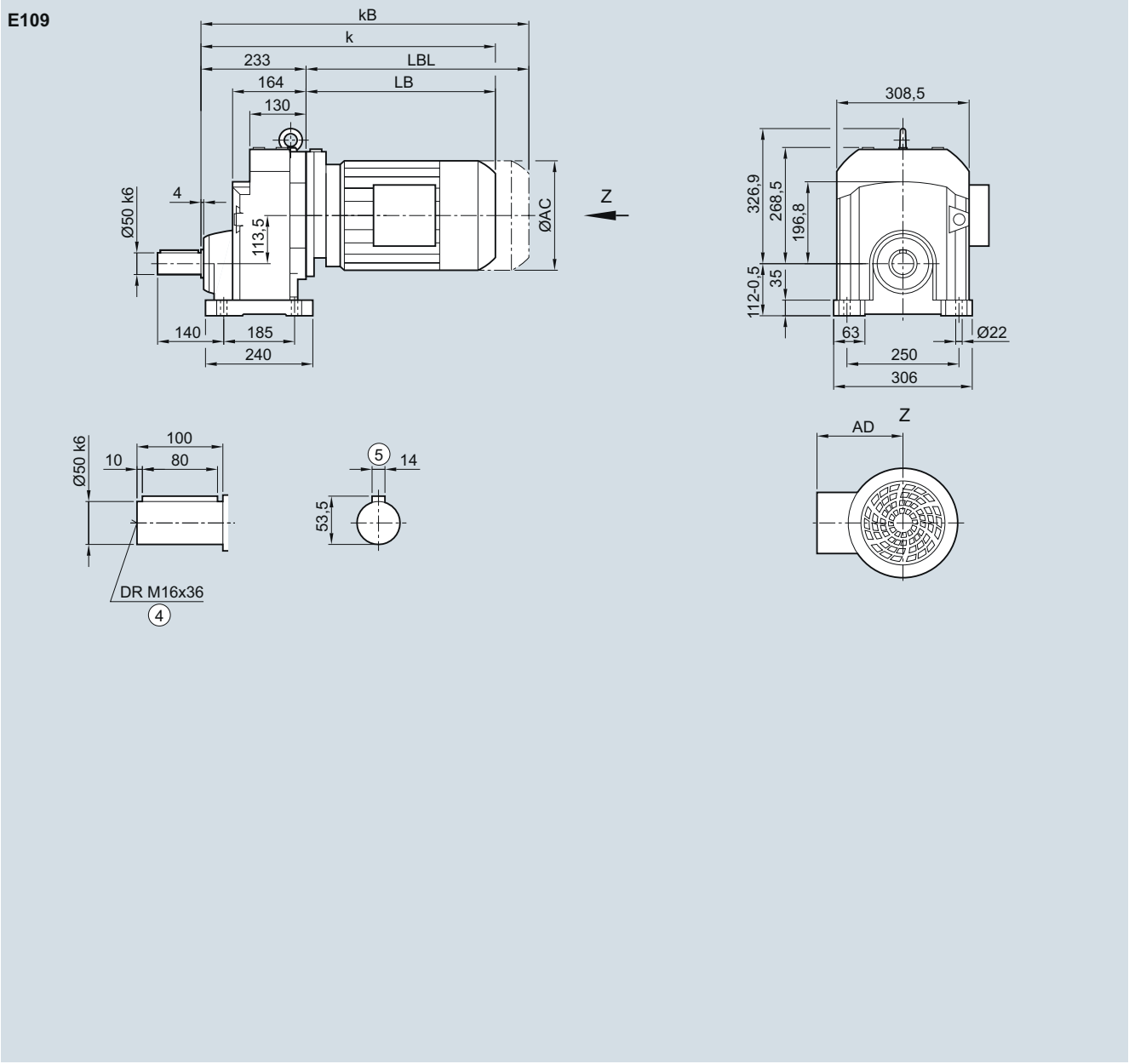

Motor	LE										LES					
	90	90Z	100	100Z	112	112Z	132	132Z	160	160Z	180	180Z	200	200Z	225	225Y
AC	173.8	173.8	198.0	198.0	222.0	222.0	264.0	264.0	318.0	318.0	352.5	352.5	392.5	392.5	439.0	439.0
AD[1)]	154.2	154.2	170.5	170.5	181.5	181.5	207.0	207.0	241.0	241.0	292.0	292.0	315.0	315.0	382.0	382.0
k	549.0	589.0	599.5	634.5	609.5	634.5	662.5	712.5	744.5	804.5	817.5	847.5	885.5	910.5	931.0	991.0
kB	619.0	659.0	678.0	713.0	682.5	707.5	767.0	817.0	860.5	920.5	946.5	976.5	1 032.5	1 057.5	1 159.0	1 219.0
LB	316.0	356.0	366.5	401.5	376.5	401.5	429.5	479.5	511.5	571.5	584.5	614.5	652.5	677.5	698.0	758.0
LBL	386.0	426.0	445.0	480.0	449.5	474.5	534.0	584.0	627.5	687.5	713.5	743.5	799.5	824.5	926.0	986.0

④ DIN 332
⑤ Feather key/keyway DIN 6885-1
1) AD depends on the motor options, for other dimensions see page 8/36.

© Siemens AG 2017

EF109 gearbox in a flange-mounted design

EF030

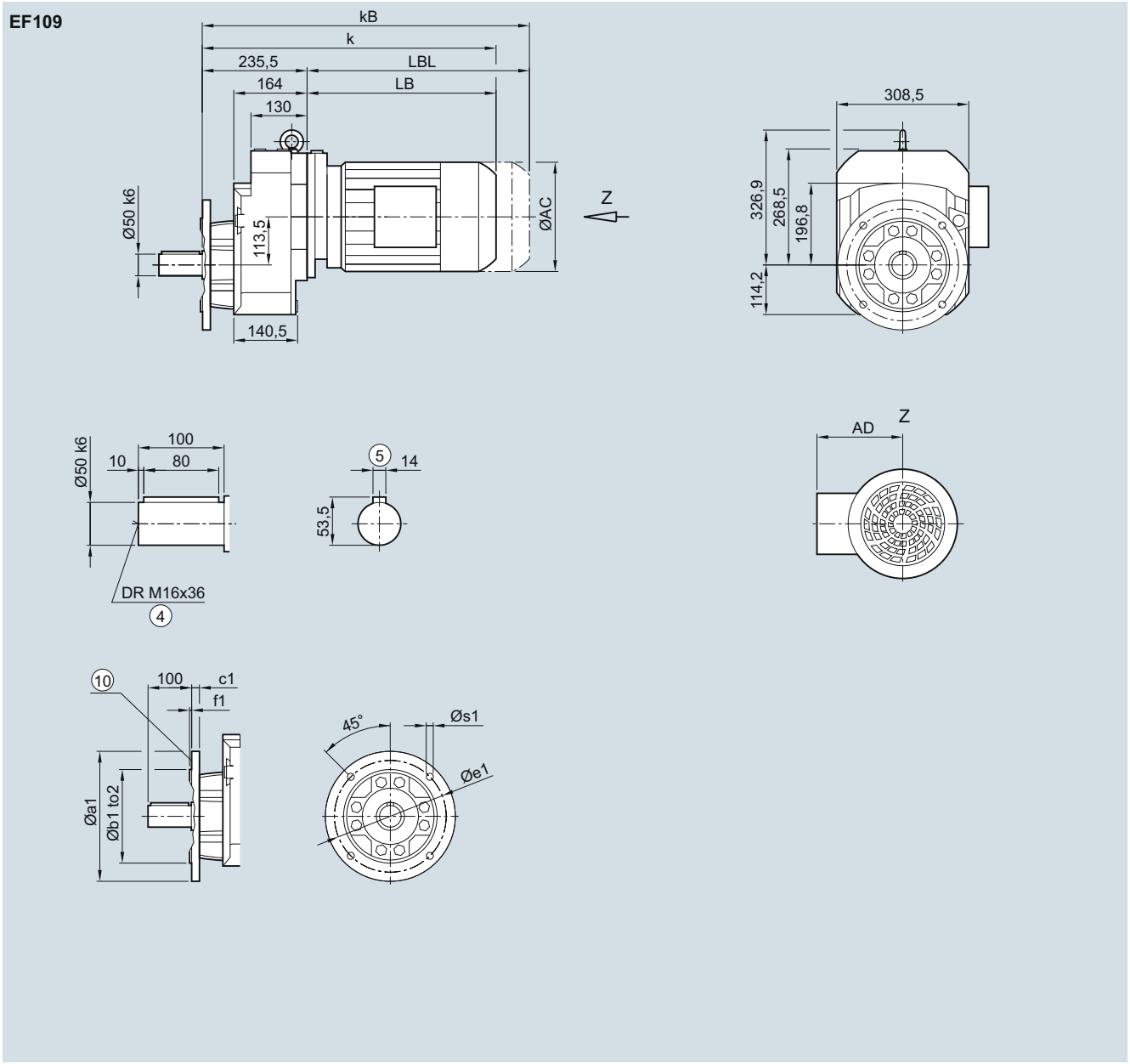

Flange	a1	b1	to2	c1	e1	f1	s1
	300	230	j6	16	265	4.0	13.5
	350	250	j6	18	300	5.0	17.5

Motor	LE										LES					
	90	90Z	100	100Z	112	112Z	132	132Z	160	160Z	180	180Z	200	200Z	225	225Y
AC	173.8	173.8	198.0	198.0	222.0	222.0	264.0	264.0	318.0	318.0	352.5	352.5	392.5	392.5	439.0	439.0
AD[1)]	154.2	154.2	170.5	170.5	181.5	181.5	207.0	207.0	241.0	241.0	292.0	292.0	315.0	315.0	382.0	382.0
k	551.5	591.5	602.0	637.0	612.0	637.0	665.0	715.0	747.0	807.0	820.0	850.0	888.0	913.0	933.5	993.5
kB	621.5	661.5	680.5	715.5	685.0	710.0	769.5	819.5	863.0	923.0	949.0	979.0	1 035.0	1 060.0	1 161.5	1 221.5
LB	316.0	356.0	366.5	401.5	376.5	401.5	429.5	479.5	511.5	571.5	584.5	614.5	652.5	677.5	698.0	758.0
LBL	386.0	426.0	445.0	480.0	449.5	474.5	534.0	584.0	627.5	687.5	713.5	743.5	799.5	824.5	926.0	986.0

④ DIN 332
1) AD depends on the motor options, for other dimensions see page 8/36.
⑤ Feather key/keyway DIN 6885-1
⑩ For inner contour see page 3/164

© Siemens AG 2017

EZ109 gearbox in a housing flange design

EZ030

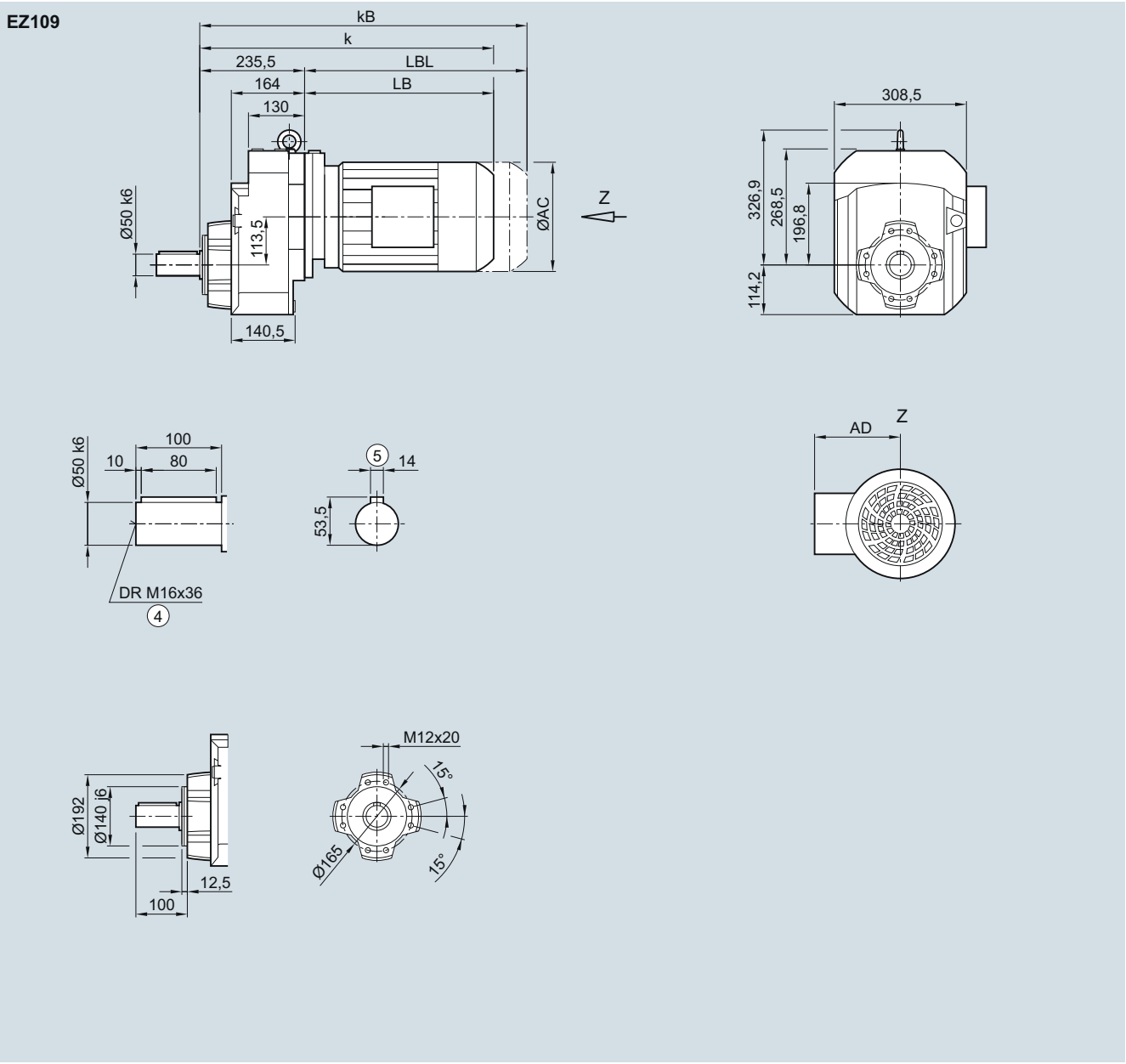

Motor	LE										LES					
	90	90Z	100	100Z	112	112Z	132	132Z	160	160Z	180	180Z	200	200Z	225	225Y
AC	173.8	173.8	198.0	198.0	222.0	222.0	264.0	264.0	318.0	318.0	352.5	352.5	392.5	392.5	439.0	439.0
AD[1)]	154.2	154.2	170.5	170.5	181.5	181.5	207.0	207.0	241.0	241.0	292.0	292.0	315.0	315.0	382.0	382.0
k	549.0	589.0	599.5	634.5	609.5	634.5	662.5	712.5	744.5	804.5	817.5	847.5	885.5	910.5	931.0	991.0
kB	619.0	659.0	678.0	713.0	682.5	707.5	767.0	817.0	860.5	920.5	946.5	976.5	1 032.5	1 057.5	1 159.0	1 219.0
LB	316.0	356.0	366.5	401.5	376.5	401.5	429.5	479.5	511.5	571.5	584.5	614.5	652.5	677.5	698.0	758.0
LBL	386.0	426.0	445.0	480.0	449.5	474.5	534.0	584.0	627.5	687.5	713.5	743.5	799.5	824.5	926.0	986.0

④ DIN 332

⑤ Feather key/keyway DIN 6885-1

1) AD depends on the motor options, for other dimensions see page 8/36.

© Siemens AG 2017

E129 gearbox in a foot-mounted design

E030

E129

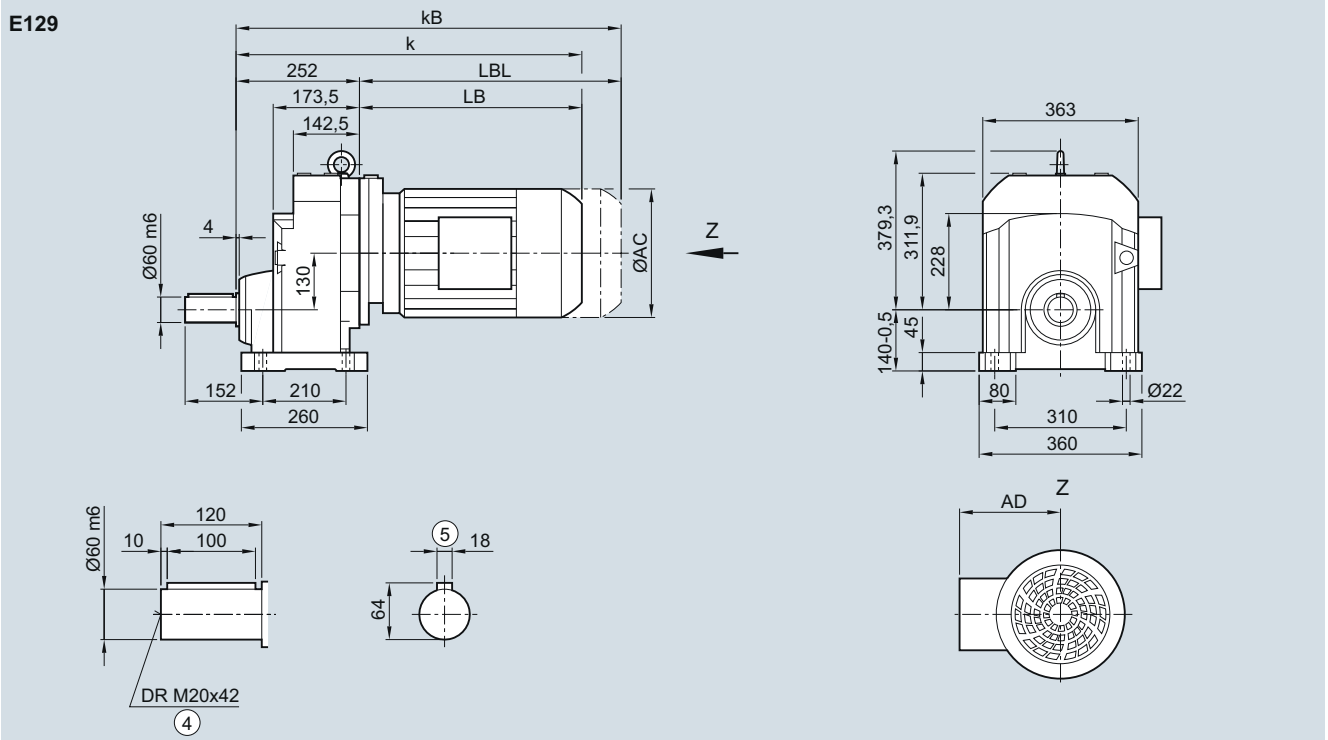

Motor	LE										LES						
	90S	90Z	100	100Z	112	112Z	132	132Z	160	160Z	180	180Z	200	200Z	225	225Y	250
AC	173.8	173.8	198.0	198.0	222.0	222.0	264.0	264.0	318.0	318.0	352.5	352.5	392.5	392.5	439.0	439.0	487.0
AD[1)]	154.2	154.2	170.5	170.5	181.5	181.5	207.0	207.0	241.0	241.0	292.0	292.0	315.0	315.0	382.0	382.0	457.0
k	561.0	601.0	609.5	644.5	619.5	644.5	670.5	720.5	752.5	812.5	825.5	855.5	893.5	918.5	945.0	1 005.0	1 050.5
kB	631.0	671.0	688.0	723.0	692.5	717.5	775.0	825.0	868.5	928.5	954.5	984.5	1 040.5	1 065.5	1 173.0	1 233.0	1 275.5
LB	309.0	349.0	357.5	392.5	367.5	392.5	418.5	468.5	500.5	560.5	573.5	603.5	641.5	666.5	693.0	753.0	798.5
LBL	379.0	419.0	436.0	471.0	440.5	465.5	523.0	573.0	616.5	676.5	702.5	732.5	788.5	813.5	921.0	981.0	1 023.5

④ DIN 332

⑤ Feather key/keyway DIN 6885-1

1) AD depends on the motor options, for other dimensions see page 8/36.

© Siemens AG 2017

EF129 gearbox in a flange-mounted design

EF030

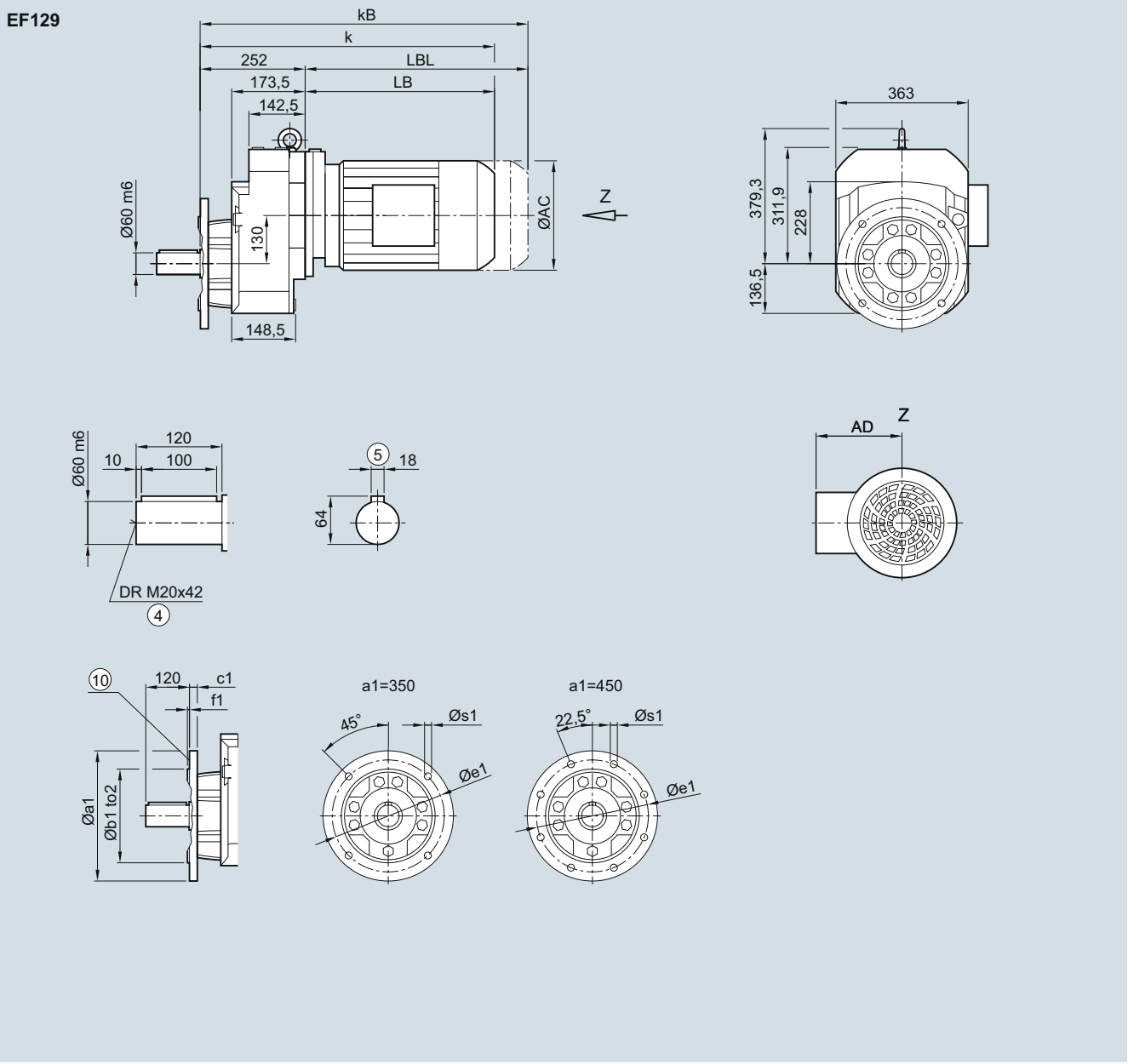

Flange	a1	b1	to2	c1	e1	f1	s1
	350	250	h6	18	300	5	17.5
	450	350	h6	22	400	5	17.5

Motor	LE 90S	90Z	100	100Z	112	112Z	132	132Z	160	160Z	LES 180	180Z	200	200Z	225	225Y	250
AC	173.8	173.8	198.0	198.0	222.0	222.0	264.0	264.0	318.0	318.0	352.5	352.5	392.5	392.5	439.0	439.0	487.0
AD[1)]	154.2	154.2	170.5	170.5	181.5	181.5	207.0	207.0	241.0	241.0	292.0	292.0	315.0	315.0	382.0	382.0	457.0
k	561.0	601.0	609.5	644.5	619.5	644.5	670.5	720.5	752.5	812.5	825.5	855.5	893.5	918.5	945.0	1 005.0	1 050.5
kB	631.0	671.0	688.0	723.0	692.5	717.5	775.0	825.0	868.5	928.5	954.5	984.5	1 040.5	1 065.5	1 173.0	1 233.0	1 275.5
LB	309.0	349.0	357.5	392.5	367.5	392.5	418.5	468.5	500.5	560.5	573.5	603.5	641.5	666.5	693.0	753.0	798.5
LBL	379.0	419.0	436.0	471.0	440.5	465.5	523.0	573.0	616.5	676.5	702.5	732.5	788.5	813.5	921.0	981.0	1 023.5

④ DIN 332
1) AD depends on the motor options, for other dimensions see page 8/36.
⑤ Feather key/keyway DIN 6885-1
⑩ For inner contour see page 3/164

© Siemens AG 2017

EZ129 gearbox in a housing flange design

EZ030

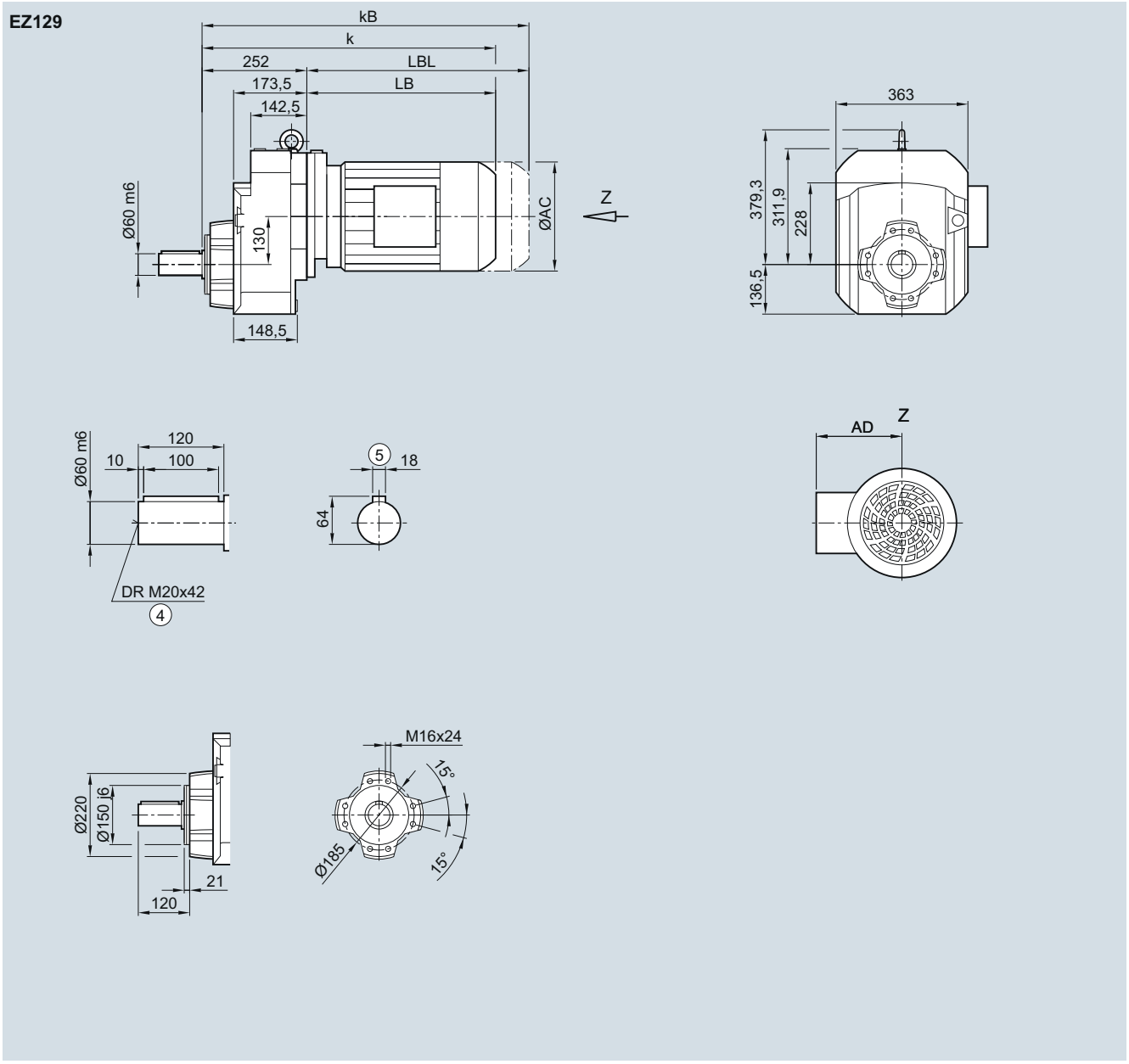

Motor	LE										LES						
	90S	90Z	100	100Z	112	112Z	132	132Z	160	160Z	180	180Z	200	200Z	225	225Y	250
AC	173.8	173.8	198.0	198.0	222.0	222.0	264.0	264.0	318.0	318.0	352.5	352.5	392.5	392.5	439.0	439.0	487.0
AD[1)]	154.2	154.2	170.5	170.5	181.5	181.5	207.0	207.0	241.0	241.0	292.0	292.0	315.0	315.0	382.0	382.0	457.0
k	561.0	601.0	609.5	644.5	619.5	644.5	670.5	720.5	752.5	812.5	825.5	855.5	893.5	918.5	945.0	1 005.0	1 050.5
kB	631.0	671.0	688.0	723.0	692.5	717.5	775.0	825.0	868.5	928.5	954.5	984.5	1 040.5	1 065.5	1 173.0	1 233.0	1 275.5
LB	309.0	349.0	357.5	392.5	367.5	392.5	418.5	468.5	500.5	560.5	573.5	603.5	641.5	666.5	693.0	753.0	798.5
LBL	379.0	419.0	436.0	471.0	440.5	465.5	523.0	573.0	616.5	676.5	702.5	732.5	788.5	813.5	921.0	981.0	1 023.5

④ DIN 332

⑤ Feather key/keyway DIN 6885-1

1) AD depends on the motor options, for other dimensions see page 8/36.

© Siemens AG 2017

3

E149 gearbox in a foot-mounted design

E030

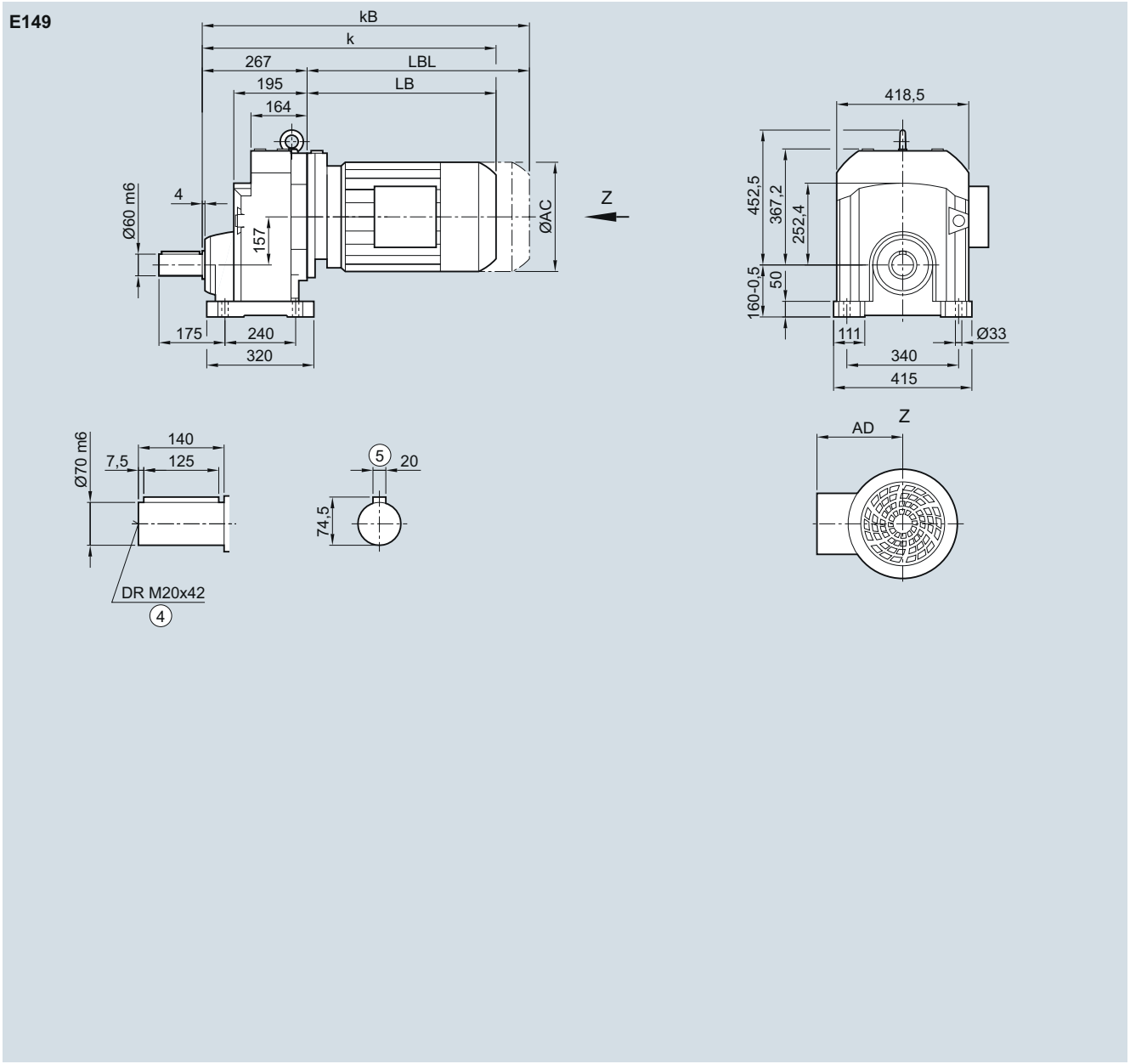

Motor	LE								LES						
	100	100Z	112	112Z	132	132Z	160	160Z	180	180Z	200	200Z	225	225Y	250
AC	198.0	198.0	222.0	222.0	264.0	264.0	318.0	318.0	352.5	352.5	392.5	392.5	439.0	439.0	487.0
AD[1)]	170.5	170.5	181.5	181.5	207.0	207.0	241.0	241.0	292.0	292.0	315.0	315.0	382.0	382.0	457.0
k	623.0	658.0	633.0	658.0	679.0	729.0	761.0	821.0	834.0	864.0	902.0	927.0	947.5	1 007.5	1 059.0
kB	701.5	736.5	706.0	731.0	783.5	833.5	877.0	937.0	963.0	993.0	1 049.0	1 074.0	1 175.5	1 235.5	1 284.0
LB	356.0	391.0	366.0	391.0	412.0	462.0	494.0	554.0	567.0	597.0	635.0	660.0	680.5	740.5	792.0
LBL	434.5	469.5	439.0	464.0	516.5	566.5	610.0	670.0	696.0	726.0	782.0	807.0	908.5	968.5	1 017.0

④ DIN 332

⑤ Feather key/keyway DIN 6885-1

1) AD depends on the motor options, for other dimensions see page 8/36.

© Siemens AG 2017

EF149 gearbox in a flange-mounted design

EF030

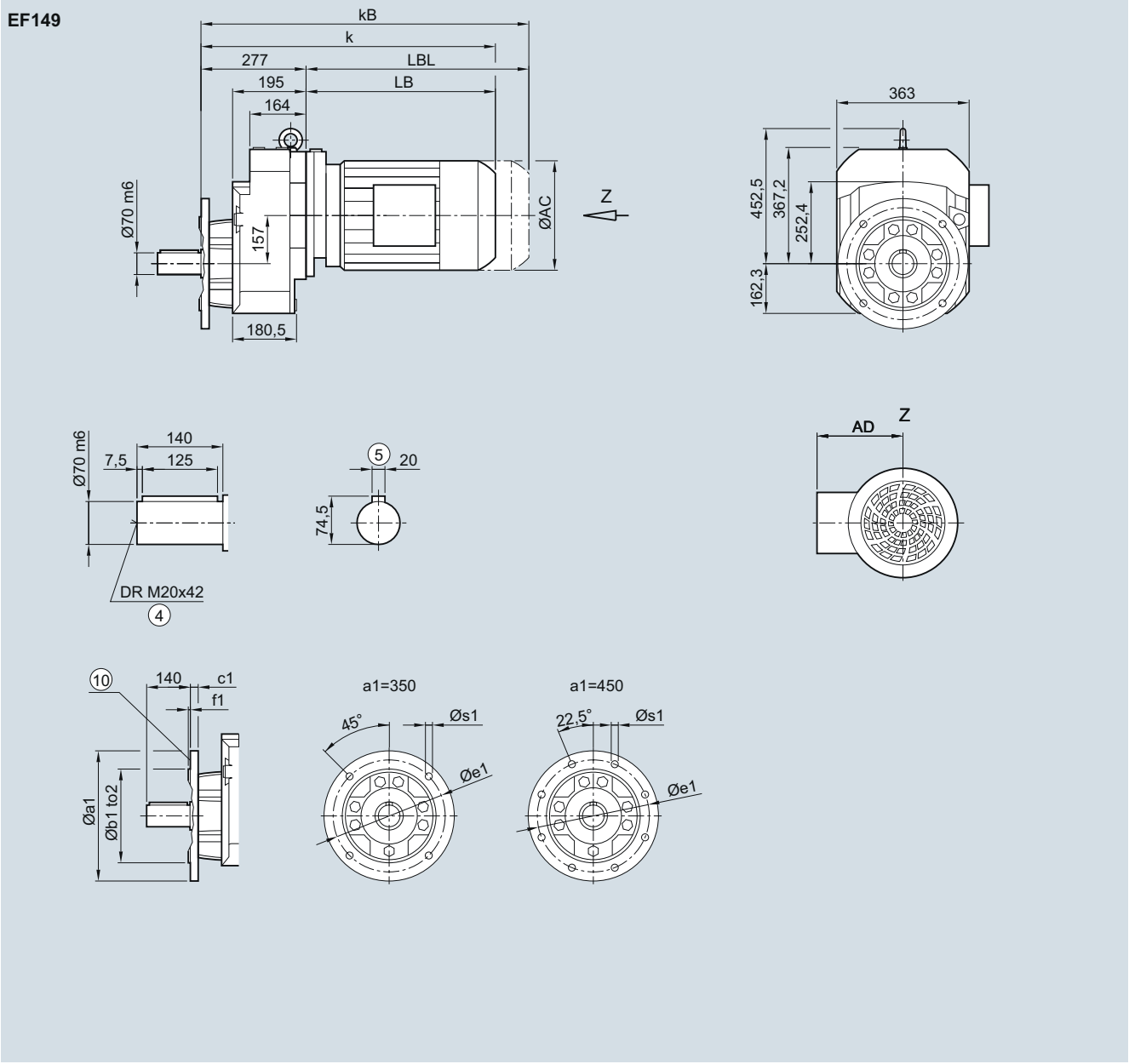

Flange	a1	b1	to2	c1	e1	f1	s1
	350	250	h6	20	300	5	17.5
	450	350	h6	22	400	5	17.5

Motor	LE								LES						
	100	100Z	112	112Z	132	132Z	160	160Z	180	180Z	200	200Z	225	225Y	250
AC	198.0	198.0	222.0	222.0	264.0	264.0	318.0	318.0	352.5	352.5	392.5	392.5	439.0	439.0	487.0
AD[1)]	170.5	170.5	181.5	181.5	207.0	207.0	241.0	241.0	292.0	292.0	315.0	315.0	382.0	382.0	457.0
k	633.0	668.0	643.0	668.0	689.0	739.0	771.0	831.0	844.0	874.0	912.0	937.0	957.5	1 017.5	1 069.0
kB	711.5	746.5	716.0	741.0	793.5	843.5	887.0	947.0	973.0	1 003.0	1 059.0	1 084.0	1 185.5	1 245.5	1 294.0
LB	356.0	391.0	366.0	391.0	412.0	462.0	494.0	554.0	567.0	597.0	635.0	660.0	680.5	740.5	792.0
LBL	434.5	469.5	439.0	464.0	516.5	566.5	610.0	670.0	696.0	726.0	782.0	807.0	908.5	968.5	1 017.0

④ DIN 332
1) AD depends on the motor options, for other dimensions see page 8/36.
⑤ Feather key/keyway DIN 6885-1
⑩ For inner contour see page 3/164

© Siemens AG 2017

EZ149 gearbox in a housing flange design

EZ030

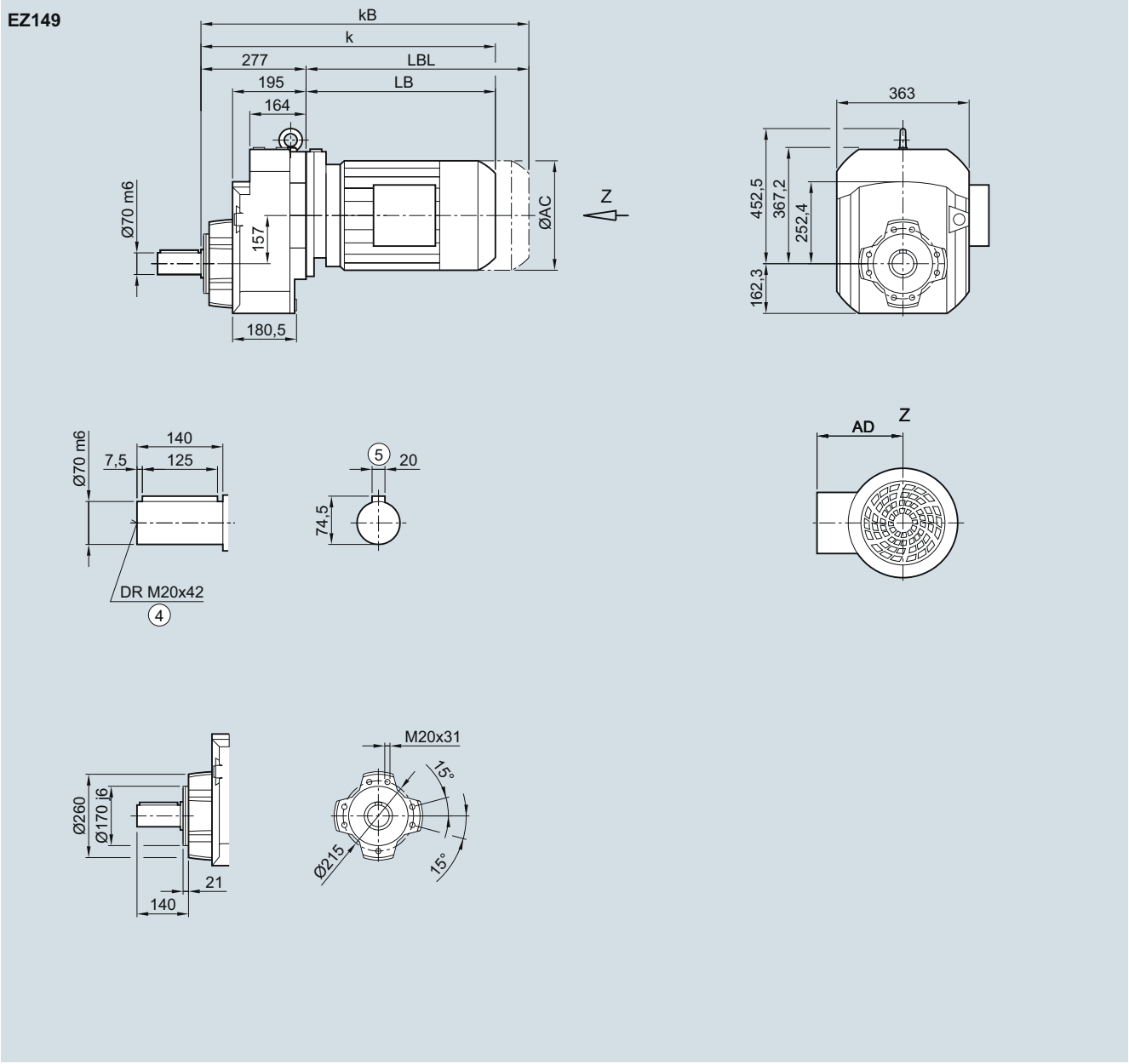

Motor	LE								LES						
	100	100Z	112	112Z	132	132Z	160	160Z	180	180Z	200	200Z	225	225Y	250
AC	198.0	198.0	222.0	222.0	264.0	264.0	318.0	318.0	352.5	352.5	392.5	392.5	439.0	439.0	487.0
AD[1)]	170.5	170.5	181.5	181.5	207.0	207.0	241.0	241.0	292.0	292.0	315.0	315.0	382.0	382.0	457.0
k	623.0	658.0	633.0	658.0	679.0	729.0	761.0	821.0	834.0	864.0	902.0	927.0	947.5	1 007.5	1 059.0
kB	701.5	736.5	706.0	731.0	783.5	833.5	877.0	937.0	963.0	993.0	1 049.0	1 074.0	1 175.5	1 235.5	1 284.0
LB	356.0	391.0	366.0	391.0	412.0	462.0	494.0	554.0	567.0	597.0	635.0	660.0	680.5	740.5	792.0
LBL	434.5	469.5	439.0	464.0	516.5	566.5	610.0	670.0	696.0	726.0	782.0	807.0	908.5	968.5	1 017.0

④ DIN 332
⑤ Feather key/keyway DIN 6885-1
1) AD depends on the motor options, for other dimensions see page 8/36.

© Siemens AG 2017

Helical tandem geared motors

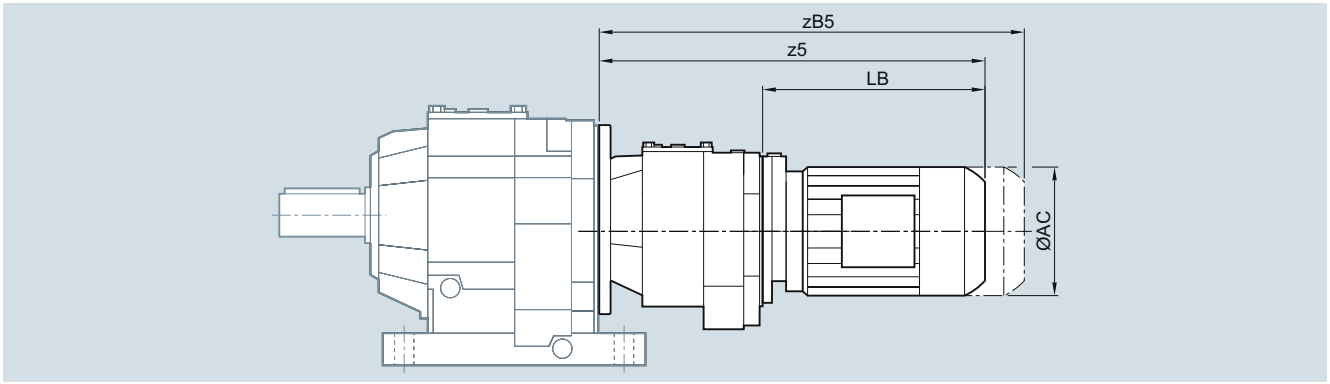

Gearbox	Motor	AC	z5	zB5	LB
D./Z.29-D/Z19	LA63	117.8	331.0	375.5	160.5
D./Z.39-D/Z19	LA63	117.8	331.0	375.5	160.5
	LA71	138.8	363.0	418.0	184.5
	LA71Z	138.8	382.0	437.0	203.5
D./Z.49-D/Z19	LA63	117.8	322.0	366.5	160.5
	LA71	138.8	354.0	409.0	184.5
	LA71Z	138.8	373.0	428.0	203.5
D./Z.59-D/Z19	LA63	117.8	322.0	366.5	160.5
	LA71	138.8	354.0	409.0	184.5
	LA71Z	138.8	373.0	428.0	203.5
	LE80	156.3	410.0	470.0	240.0
	LE80Z	156.3	445.0	505.0	275.0
D./Z.69-D/Z19	LA63	117.8	322.0	366.5	160.5
	LA71	138.8	354.0	409.0	184.5
	LA71Z	138.8	373.0	428.0	203.5
	LE80	156.3	410.0	470.0	240.0
	LE80Z	156.3	445.0	505.0	275.0
D./Z.79-D/Z39	LA63	117.8	373.5	418.0	194.0
	LA71	138.8	405.5	460.5	226.0
	LA71Z	138.8	424.5	479.5	245.0
	LE80	156.3	469.5	529.5	290.0
	LE80Z	156.3	504.5	564.5	325.0
D./Z.89-D/Z39	LA63	117.8	356.5	401.0	194.0
	LA71	138.8	388.5	443.5	226.0
	LA71Z	138.8	407.5	462.5	245.0
	LE80	156.3	452.5	512.5	290.0
	LE80Z	156.3	487.5	547.5	325.0
	LE90	173.8	514.0	584.0	351.5
	LE90Z	173.8	554.0	624.0	391.5
D.109-D/Z39	LA63	117.8	347.5	392.0	194.0
	LA71	138.8	379.5	434.5	226.0
	LA71	138.8	398.5	453.5	245.0
	LE80	156.3	443.5	503.5	290.0
	LE80Z	156.3	478.5	538.5	325.0
	LE90	173.8	505.0	575.0	351.5
	LE90Z	173.8	545.0	615.0	391.5
	LE100	198.0	561.5	640.0	408.0
	LE100Z	198.0	596.5	675.0	443.0
D.129-D/Z49	LA63	117.8	376.5	421.0	184.5
	LA71	138.8	408.5	463.5	216.5
	LA71Z	138.8	427.5	482.5	235.5
	LE80	156.3	472.5	532.5	280.5
	LE80Z	156.3	507.5	567.5	315.5
	LE90	173.8	534.0	604.0	342.0
	LE90Z	173.8	574.0	644.0	382.0

Gearbox	Motor	AC	z5	zB5	LB
D.129-D/Z49	LE100	198.0	590.5	669.0	398.5
	LE100Z	198.0	625.5	704.0	433.5
	LE112	222.0	600.5	673.5	408.5
	LE112Z	222.0	635.0	708.0	443.0
D.149-D/Z49	LA63	117.8	366.0	410.5	184.5
	LA71	138.8	398.0	453.0	216.5
	LA71Z	138.8	417.0	472.0	235.5
	LE80	156.3	462.0	522.0	280.5
	LE80Z	156.3	497.0	557.0	315.5
	LE90	173.8	523.5	593.5	342.0
	LE90Z	173.8	563.5	633.5	382.0
	LE100	198.0	580.0	658.5	398.5
	LE100Z	198.0	615.0	693.5	433.5
	LE112	222.0	590.0	663.0	408.5
	LE112Z	222.0	624.5	697.5	443.0
	LE132	264.0	643.0	747.5	461.5
	LE132Z	264.0	693.0	797.5	511.5
D.169-D/Z69	LA63	117.8	391.5	436.0	184.5
	LA71	138.8	423.5	478.5	216.5
	LA71Z	138.8	442.5	497.5	235.5
	LE80	156.3	487.5	547.5	280.5
	LE80Z	156.3	522.5	582.5	315.5
	LE90	173.8	549.0	619.0	342.0
	LE90Z	173.8	589.0	659.0	382.0
	LE100	198.0	605.5	684.0	398.5
	LE100Z	198.0	640.5	719.0	433.5
	LE112	222.0	615.5	688.5	408.5
	LE112Z	222.0	650.0	723.0	443.0
	LE132	264.0	668.5	773.0	461.5
	LE132Z	264.0	718.5	823.0	511.5
D.189-D/Z69	LA63	117.8	391.5	436.0	184.5
	LA71	138.8	423.5	478.5	216.5
	LA71Z	138.8	442.5	497.5	235.5
	LE80	156.3	487.5	547.5	280.5
	LE80Z	156.3	522.5	582.5	315.5
	LE90	173.8	549.0	619.0	342.0
	LE90Z	173.8	589.0	659.0	382.0
	LE100	198.0	605.5	684.0	398.5
	LE100Z	198.0	640.5	719.0	433.5
	LE112	222.0	615.5	688.5	408.5
	LE112Z	222.0	650.0	723.0	443.0
	LE132	264.0	668.5	773.0	461.5
	LE132Z	264.0	718.5	823.0	511.5

© Siemens AG 2017

Dimensions

Inner contour of the flange design

Notes regarding the design of the customer's interface.

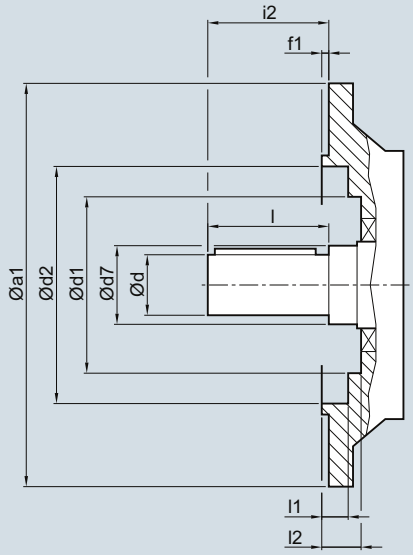

Gearbox	a1	d	d7	d1 DF/ZF	d1 DB/ZB	d2	f1	i2	l	l1 DF/ZF	l1 DB/ZB	l2
Helical gearbox DF/ZF or DB/ZB												
DF/ZF19, DB/ZB19	120	16	25	48.0	48.0	72.0	3.0	40	28	1.0	1.0	6.0
	120	16	25	48.0	48.0	72.0	3.0	40	40	1.0	1.0	6.0
	120	20	25	48.0	48.0	72.0	3.0	40	40	1.0	1.0	6.0
DF/ZF19	140	20	25	48.0	-	87.0	3.0	40	40	1.0	-	6.0
	160	20	25	48.0	-	102.0	3.5	40	40	1.0	-	6.5
DF/ZF29, DB/ZB29	120	25	30	56.0	56.0	72.0	3.0	50	50	2.0	2.0	8.0
DF/ZF29	140	25	30	56.0	-	87.0	3.5	50	50	2.0	-	7.0
	160	25	30	56.0	-	102.0	3.5	50	50	2.0	-	7.5
DF/ZF39, DB/ZB39	120	25	35	69.0	66.0	72.0	3.0	50	50	4.0	4.0	9.0
DF/ZF39	160	25	35	66.5	-	102.0	3.5	50	50	1.5	-	6.5
	200	25	35	66.5	-	120.0	3.5	50	50	1.5	-	6.5
DF/ZF49, DB/ZB49	140	30	35	79.0	79.0	84.5	3.0	60	60	4.0	4.0	9.5
DF/ZF49	160	30	35	79.0	-	94.5	3.5	60	60	5.5	-	11.0
	200	30	35	79.0	-	121.0	3.5	60	60	4.5	-	10.0
DF/ZF59, DB/ZB59	160	35	40	88.0	88.0	94.5	3.5	70	70	4.5	4.5	11.0
DF/ZF59, EF49	200	35	40	88.0	-	115.0	3.5	70	70	4.5	-	9.0
	250	35	40	88.0	-	168.0	4.0	70	70	4.0	-	10.5
DF/ZF69, DB/ZB69	200	35	47	105.0	105.0	115.0	3.5	70	70	4.5	4.5	11.0
DF/ZF69	250	35	47	105.0	-	168.0	4.0	70	70	4.0	-	10.5
DF/ZF79, DB/ZB79	250	40	52	113.0	114.5	168.0	4.0	80	80	0.5	2.5	8.0
DF/ZF79, EF89	300	40	52	113.0	-	217.0	4.0	80	80	0.5	-	8.0
DF/ZF89, DB/ZB89	300	50	62	143.0	143.0	218.0	4.0	100	100	1.5	1.5	9.0
DF/ZF89	350	50	62	143.0	-	238.0	5.0	100	100	2.5	-	10.0
DF/ZF109	350	60	65	157.0	-	236.0	5.0	120	120	2.0	-	12.0
	450	60	65	168.0	-	335.0	5.0	120	120	2.0	-	12.0
DF/ZF129	350	70	75	180.0	-	236.0	5.0	140	140	7.5	-	20.0
	450	70	75	180.0	-	330.0	5.0	140	140	7.5	-	20.0
DF/ZF149	450	90	100	225	-	330	5.0	170	170	2.5	-	10.0
	550	90	100	225	-	430	5.0	170	170	2.5	-	10.0
DF/ZF169	450	110	120	235	-	330	5	210	210	0.5	-	10.0
	550	110	120	235	-	430	5	210	210	0.5	-	10
DF/ZF189	550	120	140	274	-	430	5	210	210	0	-	10
	660	120	140	274	-	530	6	210	210	1	-	11

© Siemens AG 2017

Inner contour of the flange design (continued)

Notes regarding the design of the customer's interface.

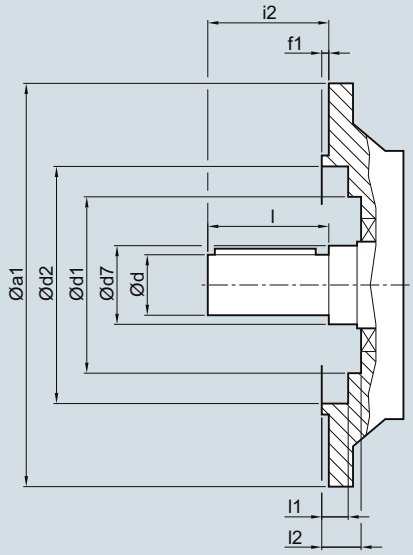

Gearbox	a1	d	d7	d1	d2	f1	i2	l	l1	l2
Helical gearbox EF										
EF39	120	20	35	-	72	3	40	40	6	-
	140	20	35	-	80	3	40	40	6	-
	160	20	35	87	100	3.5	40	40	5.5	6.5
	200	20	35	87	121	3.5	40	40	5.5	6.5
EF49	160	25	40	88.0	94.5	3.5	50	50	4.5	11.0
	200	25	40	88.0	115.0	3.5	50	50	4.5	9.0
	250	25	40	88.0	168.0	4.0	50	50	4.0	10.5
EF69	200	30	40	105.0	115.0	3.5	60	60	4.5	11.0
	250	30	40	105.0	168.0	4.0	60	60	4.0	10.5
EF89	250	40	45	113.0	168.0	4.0	80	80	0.5	8.0
	300	40	45	113.0	217.0	4.0	80	80	0.5	8.0
EF109	300	50	55	143.0	218.0	4.0	97.5	100	1.5	9.0
	350	50	55	143.0	238.0	5.0	97.5	100	2.5	10.0
EF129	350	60	65	157.0	236.0	5.0	120	120	2.0	12.0
	450	60	65	168.0	335.0	5.0	120	120	2.0	12.0
EF149	350	70	75	180.0	236.0	5.0	130	140	7.5	20.0
	450	70	75	180.0	330.0	5.0	130	140	7.5	20.0

© Siemens AG 2017

Notes

© Siemens AG 2017



4/3 **Orientation**

4/3 **Geared motors up to 55 kW**
4/3 Selection and ordering data

4/50 **Transmission ratios and torques**
4/50 Selection and ordering data

4/61 **Transmission ratios and torques for very low speeds**
4/61 Selection and ordering data

4/72 **Dimensions**
4/72 Dimensional drawing overview
4/74 Parallel shaft geared motors FD./FZ.29
4/78 Parallel shaft geared motors FD./FZ.39
4/82 Parallel shaft geared motors FD./FZ.49
4/86 Parallel shaft geared motors FD./FZ.69
4/90 Parallel shaft geared motors FD./FZ.79
4/94 Parallel shaft geared motors FD./FZ.89
4/98 Parallel shaft geared motors FD./FZ.109
4/102 Parallel shaft geared motors FD./FZ.129
4/106 Parallel shaft geared motors FD./FZ.149
4/110 Parallel shaft geared motors FD./FZ.169
4/114 Parallel shaft geared motors FD./FZ.189
4/118 Parallel shaft tandem geared motors
4/120 SIMOLOC assembly system
Protection covers
4/121 Protection covers for hollow shaft
4/121 Protection covers for hollow shaft with shrink disk
4/122 Protection covers for hollow shaft with SIMOLOC assembly system
4/123 Inner contour of the flange design
4/124 Pin holes

© Siemens AG 2017

Orientation

SIMOGEAR parallel shaft geared motor F

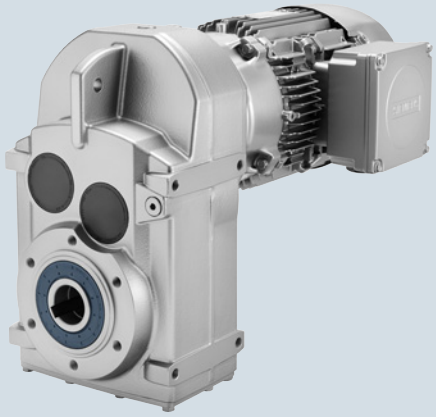

Fig. 4/1 Parallel shaft geared motor F

Gearbox designation	Number of sizes	Maximum output torque	Transmission ratio	Maximum motor power
		T_{2N}	i	P_1
		Nm	-	kW
FZ29 … FZ189 (2-stage)	11	150 … 19 000	3.5 … 70	55
FD29 … FD189 (3-stage)	11	150 … 19 000	32 … 413	55
FZ.29-Z19 ... FD.189-D69 (4-stage to 6-stage)	11	150 … 19 000	274 … 29 900	7.5

SIMOGEAR parallel shaft geared motors are available in the following versions:

Transmission stages

- 2-stage or 3-stage parallel shaft geared motors
- 4-stage to 6-stage parallel shaft geared motors for very low output speeds

Versions

- Shaft-mounted design
- Flange-mounted design
- Design with integrated housing flange
- Foot-mounted design

Mounting

- Hollow shaft design with feather key
- Hollow shaft design with splined shaft
- Hollow shaft design with shrink disk
- Hollow shaft design with SIMOLOC assembly system
- Solid shaft design with and without feather key

© Siemens AG 2017

Selection and ordering data

P_{rated} kW	n_2 rpm	T_2 Nm	i -	F_{R2} N	f_B -	m kg	Article No. (Article No. supplement ➞ below)	Order code No. of poles
0.09	**FD.69-LA63MF6**							
	2.4	350	348.40	11 400	1.7	30	**2KJ3404 - ■ BD11 - ■ ■ S1**	**P01**
	2.7	310	309.78	11 500	1.9	30	**2KJ3404 - ■ BD11 - ■ ■ R1**	**P01**
	FD.49-LA63MF6							
	2.6	335	330.98	8 460	1.4	25	**2KJ3403 - ■ BD11 - ■ ■ S1**	**P01**
	2.9	295	294.29	8 570	1.6	25	**2KJ3403 - ■ BD11 - ■ ■ R1**	**P01**
	3.3	260	258.40	8 670	1.8	25	**2KJ3403 - ■ BD11 - ■ ■ Q1**	**P01**
	3.6	235	234.91	8 750	2.0	25	**2KJ3403 - ■ BD11 - ■ ■ P1**	**P01**
	FD.39-LA63MF6							
	3.1	275	274.26	5 870	1.0	16	**2KJ3402 - ■ BD11 - ■ ■ R1**	**P01**
	3.5	245	243.26	5 980	1.2	16	**2KJ3402 - ■ BD11 - ■ ■ Q1**	**P01**
	4.0	210	211.06	6 110	1.4	16	**2KJ3402 - ■ BD11 - ■ ■ P1**	**P01**
	4.4	194	191.87	6 170	1.5	16	**2KJ3402 - ■ BD11 - ■ ■ N1**	**P01**
	FD.39-LA63MD4							
	5.1	168	274.26	6 270	1.7	15	**2KJ3402 - ■ BB11 - ■ ■ R1**	
	5.8	149	243.26	6 340	1.9	15	**2KJ3402 - ■ BB11 - ■ ■ Q1**	
	FD.29-LA63MD4							
	4.7	183	298.58	5 220	0.82	9	**2KJ3401 - ■ BB11 - ■ ■ Q1**	
	5.3	162	264.39	5 220	0.92	9	**2KJ3401 - ■ BB11 - ■ ■ P1**	
	6.1	141	229.72	5 220	1.1	9	**2KJ3401 - ■ BB11 - ■ ■ N1**	
	6.7	128	208.83	5 220	1.2	9	**2KJ3401 - ■ BB11 - ■ ■ M1**	
	7.9	109	177.71	5 220	1.4	9	**2KJ3401 - ■ BB11 - ■ ■ L1**	
	8.7	99	161.55	5 220	1.5	9	**2KJ3401 - ■ BB11 - ■ ■ K1**	
	9.9	86	140.86	5 220	1.7	9	**2KJ3401 - ■ BB11 - ■ ■ J1**	
	11	77	126.09	5 220	1.9	9	**2KJ3401 - ■ BB11 - ■ ■ H1**	
	13	69	111.97	5 220	2.2	9	**2KJ3401 - ■ BB11 - ■ ■ G1**	
	FD.29-LA63MD4							
	14	64	103.36	5 220	2.4	9	**2KJ3401 - ■ BB11 - ■ ■ F1**	
	16	55	89.78	5 220	2.7	9	**2KJ3401 - ■ BB11 - ■ ■ E1**	
	18	48	78.02	5 220	3.1	9	**2KJ3401 - ■ BB11 - ■ ■ D1**	
	20	43	70.43	5 220	3.5	9	**2KJ3401 - ■ BB11 - ■ ■ C1**	
	21	41	66.29	5 220	3.7	9	**2KJ3401 - ■ BB11 - ■ ■ B1**	
	24	36	57.79	5 220	4.2	9	**2KJ3401 - ■ BB11 - ■ ■ A1**	
	FZ.29-LA63MD4							
	25	35	56.73	5 220	4.3	9	**2KJ3301 - ■ BB11 - ■ ■ C2**	
	28	31	50.32	5 220	4.9	9	**2KJ3301 - ■ BB11 - ■ ■ B2**	
	32	27	43.66	5 220	5.6	9	**2KJ3301 - ■ BB11 - ■ ■ A2**	
	35	24	39.69	5 220	6.2	9	**2KJ3301 - ■ BB11 - ■ ■ X1**	
	41	21	34.04	5 220	7.2	9	**2KJ3301 - ■ BB11 - ■ ■ W1**	
	45	19	30.95	5 220	7.9	9	**2KJ3301 - ■ BB11 - ■ ■ V1**	
	52	17	27.13	5 220	9.0	9	**2KJ3301 - ■ BB11 - ■ ■ U1**	
	58	15	24.22	5 220	10	9	**2KJ3301 - ■ BB11 - ■ ■ T1**	
	65	13	21.58	5 220	11	9	**2KJ3301 - ■ BB11 - ■ ■ S1**	
	70	12	19.92	5 120	12	9	**2KJ3301 - ■ BB11 - ■ ■ R1**	
	80	11	17.44	4 900	14	9	**2KJ3301 - ■ BB11 - ■ ■ Q1**	
	92	9.4	15.29	4 700	16	9	**2KJ3301 - ■ BB11 - ■ ■ P1**	
	101	8.5	13.88	4 550	18	9	**2KJ3301 - ■ BB11 - ■ ■ N1**	
	107	8	13.06	4 470	19	9	**2KJ3301 - ■ BB11 - ■ ■ M1**	

Article No. supplement		
Shaft design	**1, 5 or 9**	➞ page 10/44
Frequency and voltage	**2 or 9**	➞ page 11/2
Gearbox mounting type	**A, D, F or H**	➞ page 10/37

© Siemens AG 2017

4

Selection and ordering data (continued)

P_{rated} kW	n_2 rpm	T_2 Nm	i -	F_{R2} N	f_B -	m kg	Article No. (Article No. supplement ➞ below)	Order code No. of poles
0.09	**FZ.29-LA63MD4**							
	122	7.1	11.51	4 290	20	9	**2KJ3301 - ■ BB11 - ■ ■ L1**	
	140	6.1	9.99	4 090	22	9	**2KJ3301 - ■ BB11 - ■ ■ K1**	
	144	5.9	9.69	4 050	24	9	**2KJ3301 - ■ BB11 - ■ ■ J1**	
	162	5.3	8.63	3 900	24	9	**2KJ3301 - ■ BB11 - ■ ■ H1**	
	176	4.9	7.97	3 800	24	9	**2KJ3301 - ■ BB11 - ■ ■ G1**	
0.12	**FD.69-LA63MG6**							
	2.9	395	348.40	11 300	1.5	30	**2KJ3404 - ■ BE11 - ■ ■ S1**	**P01**
	3.2	355	309.78	11 400	1.7	30	**2KJ3404 - ■ BE11 - ■ ■ R1**	**P01**
	3.7	310	272.00	11 500	1.9	30	**2KJ3404 - ■ BE11 - ■ ■ Q1**	**P01**
	FD.69-LA63ME4							
	3.9	295	348.40	11 500	2.0	29	**2KJ3404 - ■ BC11 - ■ ■ S1**	
	FD.49-LA63MG6							
	3.0	375	330.98	8 340	1.3	25	**2KJ3403 - ■ BE11 - ■ ■ S1**	**P01**
	3.4	335	294.29	8 460	1.4	25	**2KJ3403 - ■ BE11 - ■ ■ R1**	**P01**
	FD.49-LA63MG6							
	3.9	295	258.40	8 570	1.6	25	**2KJ3403 - ■ BE11 - ■ ■ Q1**	**P01**
	FD.49-LA63ME4							
	4.1	280	330.98	8 610	1.7	24	**2KJ3403 - ■ BC11 - ■ ■ S1**	
	4.6	250	294.29	8 700	1.9	24	**2KJ3403 - ■ BC11 - ■ ■ R1**	
	FD.39-LA63MG6							
	3.6	310	274.26	5 740	0.92	16	**2KJ3402 - ■ BE11 - ■ ■ R1**	**P01**
	4.1	275	243.26	5 870	1.0	16	**2KJ3402 - ■ BE11 - ■ ■ Q1**	**P01**
	4.7	240	211.06	6 000	1.2	16	**2KJ3402 - ■ BE11 - ■ ■ P1**	**P01**
	FD.39-LA63ME4							
	4.9	230	274.26	6 040	1.2	15	**2KJ3402 - ■ BC11 - ■ ■ R1**	
	5.5	205	243.26	6 130	1.4	15	**2KJ3402 - ■ BC11 - ■ ■ Q1**	
	6.4	179	211.06	6 230	1.6	15	**2KJ3402 - ■ BC11 - ■ ■ P1**	
	7.0	163	191.87	6 290	1.8	15	**2KJ3402 - ■ BC11 - ■ ■ N1**	
	8.2	140	164.56	6 370	2.1	15	**2KJ3402 - ■ BC11 - ■ ■ M1**	
	FD.29-LA63MG6							
	6.2	185	161.55	5 220	0.81	9	**2KJ3401 - ■ BE11 - ■ ■ K1**	**P01**
	FD.29-LA63ME4							
	6.5	177	208.83	5 220	0.85	9	**2KJ3401 - ■ BC11 - ■ ■ M1**	
	7.6	151	177.71	5 220	0.99	9	**2KJ3401 - ■ BC11 - ■ ■ L1**	
	8.4	137	161.55	5 220	1.1	9	**2KJ3401 - ■ BC11 - ■ ■ K1**	
	9.6	120	140.86	5 220	1.3	9	**2KJ3401 - ■ BC11 - ■ ■ J1**	
	11	107	126.09	5 220	1.4	9	**2KJ3401 - ■ BC11 - ■ ■ H1**	
	12	95	111.97	5 220	1.6	9	**2KJ3401 - ■ BC11 - ■ ■ G1**	
	13	88	103.36	5 220	1.7	9	**2KJ3401 - ■ BC11 - ■ ■ F1**	
	15	76	89.78	5 220	2.0	9	**2KJ3401 - ■ BC11 - ■ ■ E1**	
	17	66	78.02	5 220	2.3	9	**2KJ3401 - ■ BC11 - ■ ■ D1**	
	19	60	70.43	5 220	2.5	9	**2KJ3401 - ■ BC11 - ■ ■ C1**	
	20	56	66.29	5 220	2.7	9	**2KJ3401 - ■ BC11 - ■ ■ B1**	
	23	49	57.79	5 220	3.1	9	**2KJ3401 - ■ BC11 - ■ ■ A1**	
	FZ.29-LA63ME4							
	24	48	56.73	5 220	3.1	9	**2KJ3301 - ■ BC11 - ■ ■ C2**	
	27	43	50.32	5 220	3.5	9	**2KJ3301 - ■ BC11 - ■ ■ B2**	
	31	37	43.66	5 220	4.0	9	**2KJ3301 - ■ BC11 - ■ ■ A2**	
	34	34	39.69	5 220	4.5	9	**2KJ3301 - ■ BC11 - ■ ■ X1**	

Article No. supplement		
Shaft design	**1, 5 or 9**	➞ page 10/44
Frequency and voltage	**2 or 9**	➞ page 11/2
Gearbox mounting type	**A, D, F or H**	➞ page 10/37

© Siemens AG 2017

Selection and ordering data (continued)

P_{rated} kW	n_2 rpm	T_2 Nm	i -	F_{R2} N	f_B -	m kg	Article No. (Article No. supplement ➞ below)	Order code No. of poles
0.12	**FZ.29-LA63ME4**							
	40	29	34.04	5 220	5.2	9	**2KJ3301 - ■ BC11 - ■ ■ W1**	
	44	26	30.95	5 220	5.7	9	**2KJ3301 - ■ BC11 - ■ ■ V1**	
	50	23	27.13	5 220	6.5	9	**2KJ3301 - ■ BC11 - ■ ■ U1**	
	56	21	24.22	5 220	7.3	9	**2KJ3301 - ■ BC11 - ■ ■ T1**	
	63	18	21.58	5 220	8.2	9	**2KJ3301 - ■ BC11 - ■ ■ S1**	
	68	17	19.92	5 140	8.9	9	**2KJ3301 - ■ BC11 - ■ ■ R1**	
	77	15	17.44	4 930	10	9	**2KJ3301 - ■ BC11 - ■ ■ Q1**	
	88	13	15.29	4 730	12	9	**2KJ3301 - ■ BC11 - ■ ■ P1**	
	97	12	13.88	4 580	13	9	**2KJ3301 - ■ BC11 - ■ ■ N1**	
	103	11	13.06	4 500	14	9	**2KJ3301 - ■ BC11 - ■ ■ M1**	
	117	9.8	11.51	4 320	15	9	**2KJ3301 - ■ BC11 - ■ ■ L1**	
	135	8.5	9.99	4 130	16	9	**2KJ3301 - ■ BC11 - ■ ■ K1**	
	139	8.2	9.69	4 070	17	9	**2KJ3301 - ■ BC11 - ■ ■ J1**	
	156	7.3	8.63	3 930	18	9	**2KJ3301 - ■ BC11 - ■ ■ H1**	
	169	6.8	7.97	3 830	18	9	**2KJ3301 - ■ BC11 - ■ ■ G1**	
	193	5.9	6.98	3 660	21	9	**2KJ3301 - ■ BC11 - ■ ■ F1**	
	221	5.2	6.12	3 510	22	9	**2KJ3301 - ■ BC11 - ■ ■ E1**	
	243	4.7	5.55	3 400	23	9	**2KJ3301 - ■ BC11 - ■ ■ D1**	
	259	4.4	5.22	3 340	24	9	**2KJ3301 - ■ BC11 - ■ ■ C1**	
	293	3.9	4.60	3 200	25	9	**2KJ3301 - ■ BC11 - ■ ■ B1**	
0.18	**FD.79-LA71MG6**							
	2.4	720	357.00	14 100	1.4	38	**2KJ3405 - ■ CD11 - ■ ■ S1**	**P01**
	2.6	655	324.62	14 300	1.5	38	**2KJ3405 - ■ CD11 - ■ ■ R1**	**P01**
	3.1	555	276.09	14 500	1.8	38	**2KJ3405 - ■ CD11 - ■ ■ Q1**	**P01**
	3.4	505	250.99	14 500	2.0	38	**2KJ3405 - ■ CD11 - ■ ■ P1**	**P01**
	FD.69-LA71MG6							
	2.4	705	348.40	10 600	0.85	31	**2KJ3404 - ■ CD11 - ■ ■ S1**	**P01**
	2.7	625	309.78	10 800	0.96	31	**2KJ3404 - ■ CD11 - ■ ■ R1**	**P01**
	3.1	550	272.00	10 900	1.1	31	**2KJ3404 - ■ CD11 - ■ ■ Q1**	**P01**
	3.4	500	247.27	11 000	1.2	31	**2KJ3404 - ■ CD11 - ■ ■ P1**	**P01**
	FD.69-LA63MF4							
	3.9	440	348.40	11 200	1.4	30	**2KJ3404 - ■ BD11 - ■ ■ S1**	
	4.4	390	309.78	11 300	1.5	30	**2KJ3404 - ■ BD11 - ■ ■ R1**	
	5.0	345	272.00	11 400	1.7	30	**2KJ3404 - ■ BD11 - ■ ■ Q1**	
	5.5	315	247.27	11 500	1.9	30	**2KJ3404 - ■ BD11 - ■ ■ P1**	
	FD.49-LA71MG6							
	2.9	595	294.29	7 200	0.81	26	**2KJ3403 - ■ CD11 - ■ ■ R1**	**P01**
	3.3	520	258.40	7 700	0.92	26	**2KJ3403 - ■ CD11 - ■ ■ Q1**	**P01**
	3.6	475	234.91	7 990	1.0	26	**2KJ3403 - ■ CD11 - ■ ■ P1**	**P01**
	FD.49-LA63MF4							
	4.1	420	330.98	8 210	1.1	25	**2KJ3403 - ■ BD11 - ■ ■ S1**	
	4.6	375	294.29	8 340	1.3	25	**2KJ3403 - ■ BD11 - ■ ■ R1**	
	5.2	325	258.40	8 480	1.5	25	**2KJ3403 - ■ BD11 - ■ ■ Q1**	
	5.7	295	234.91	8 570	1.6	25	**2KJ3403 - ■ BD11 - ■ ■ P1**	
	6.7	255	200.98	8 690	1.9	25	**2KJ3403 - ■ BD11 - ■ ■ N1**	
	7.4	230	182.71	8 760	2.1	25	**2KJ3403 - ■ BD11 - ■ ■ M1**	
	FD.39-LA63MF4							
	4.9	345	274.26	5 610	0.83	16	**2KJ3402 - ■ BD11 - ■ ■ R1**	
	5.5	310	243.26	5 740	0.94	16	**2KJ3402 - ■ BD11 - ■ ■ Q1**	

Article No. supplement		
Shaft design	**1, 5 or 9**	➞ page 10/44
Frequency and voltage	**2 or 9**	➞ page 11/2
Gearbox mounting type	**A, D, F or H**	➞ page 10/37

© Siemens AG 2017

4

Selection and ordering data (continued)

P_{rated} kW	n_2 rpm	T_2 Nm	i -	F_{R2} N	f_B -	m kg	Article No. (Article No. supplement ➞ below)	Order code No. of poles
0.18	**FD.39-LA63MF4**							
	6.4	265	211.06	5 910	1.1	16	**2KJ3402 - ■ BD11 - ■ ■ P1**	
	7.0	240	191.87	6 000	1.2	16	**2KJ3402 - ■ BD11 - ■ ■ N1**	
	8.2	210	164.56	6 110	1.4	16	**2KJ3402 - ■ BD11 - ■ ■ M1**	
	9.0	190	149.60	6 190	1.5	16	**2KJ3402 - ■ BD11 - ■ ■ L1**	
	10	167	131.17	6 270	1.7	16	**2KJ3402 - ■ BD11 - ■ ■ K1**	
	12	149	117.08	6 340	1.9	16	**2KJ3402 - ■ BD11 - ■ ■ J1**	
	13	133	104.34	6 400	2.2	16	**2KJ3402 - ■ BD11 - ■ ■ H1**	
	FD.29-LA63MF4							
	9.6	179	140.86	5 220	0.84	9	**2KJ3401 - ■ BD11 - ■ ■ J1**	
	11	161	126.09	5 220	0.93	9	**2KJ3401 - ■ BD11 - ■ ■ H1**	
	12	143	111.97	5 220	1.1	9	**2KJ3401 - ■ BD11 - ■ ■ G1**	
	13	132	103.36	5 220	1.1	9	**2KJ3401 - ■ BD11 - ■ ■ F1**	
	15	114	89.78	5 220	1.3	9	**2KJ3401 - ■ BD11 - ■ ■ E1**	
	17	99	78.02	5 220	1.5	9	**2KJ3401 - ■ BD11 - ■ ■ D1**	
	19	90	70.43	5 220	1.7	9	**2KJ3401 - ■ BD11 - ■ ■ C1**	
	20	84	66.29	5 220	1.8	9	**2KJ3401 - ■ BD11 - ■ ■ B1**	
	23	74	57.79	5 220	2.0	9	**2KJ3401 - ■ BD11 - ■ ■ A1**	
	FZ.29-LA63MF4							
	24	72	56.73	5 220	2.1	9	**2KJ3301 - ■ BD11 - ■ ■ C2**	
	27	64	50.32	5 220	2.3	9	**2KJ3301 - ■ BD11 - ■ ■ B2**	
	31	56	43.66	5 220	2.7	9	**2KJ3301 - ■ BD11 - ■ ■ A2**	
	34	50	39.69	5 220	3.0	9	**2KJ3301 - ■ BD11 - ■ ■ X1**	
	40	43	34.04	5 220	3.5	9	**2KJ3301 - ■ BD11 - ■ ■ W1**	
	44	39	30.95	5 220	3.8	9	**2KJ3301 - ■ BD11 - ■ ■ V1**	
	50	34	27.13	5 220	4.3	9	**2KJ3301 - ■ BD11 - ■ ■ U1**	
	56	31	24.22	5 220	4.9	9	**2KJ3301 - ■ BD11 - ■ ■ T1**	
	63	28	21.58	5 190	5.5	9	**2KJ3301 - ■ BD11 - ■ ■ S1**	
	68	25	19.92	5 070	5.9	9	**2KJ3301 - ■ BD11 - ■ ■ R1**	
	77	22	17.44	4 870	6.8	9	**2KJ3301 - ■ BD11 - ■ ■ Q1**	
	88	20	15.29	4 670	7.7	9	**2KJ3301 - ■ BD11 - ■ ■ P1**	
	97	18	13.88	4 530	8.5	9	**2KJ3301 - ■ BD11 - ■ ■ N1**	
	103	17	13.06	4 450	9.0	9	**2KJ3301 - ■ BD11 - ■ ■ M1**	
	117	15	11.51	4 270	9.8	9	**2KJ3301 - ■ BD11 - ■ ■ L1**	
	135	13	9.99	4 090	11	9	**2KJ3301 - ■ BD11 - ■ ■ K1**	
	139	12	9.69	4 040	12	9	**2KJ3301 - ■ BD11 - ■ ■ J1**	
	156	11	8.63	3 890	12	9	**2KJ3301 - ■ BD11 - ■ ■ H1**	
	169	10	7.97	3 790	12	9	**2KJ3301 - ■ BD11 - ■ ■ G1**	
	193	8.9	6.98	3 640	14	9	**2KJ3301 - ■ BD11 - ■ ■ F1**	
	221	7.8	6.12	3 490	15	9	**2KJ3301 - ■ BD11 - ■ ■ E1**	
	243	7.1	5.55	3 380	15	9	**2KJ3301 - ■ BD11 - ■ ■ D1**	
	259	6.6	5.22	3 320	16	9	**2KJ3301 - ■ BD11 - ■ ■ C1**	
	293	5.9	4.60	3 180	17	9	**2KJ3301 - ■ BD11 - ■ ■ B1**	
	338	5.1	4.00	3 040	18	9	**2KJ3301 - ■ BD11 - ■ ■ A1**	
	FZ.29-LA63ME2							
	162	11	17.44	3 860	14	9	**2KJ3301 - ■ BC11 - ■ ■ Q1**	**P00**
	184	9.3	15.29	3 710	16	9	**2KJ3301 - ■ BC11 - ■ ■ P1**	**P00**
	203	8.5	13.88	3 590	18	9	**2KJ3301 - ■ BC11 - ■ ■ N1**	**P00**
	216	8.0	13.06	3 520	19	9	**2KJ3301 - ■ BC11 - ■ ■ M1**	**P00**

Article No. supplement		
Shaft design	**1, 5 or 9**	➞ page 10/44
Frequency and voltage	**2 or 9**	➞ page 11/2
Gearbox mounting type	**A, D, F or H**	➞ page 10/37

© Siemens AG 2017

Selection and ordering data (continued)

P_{rated} kW	n_2 rpm	T_2 Nm	i -	F_{R2} N	f_B -	m kg	Article No. (Article No. supplement ➞ below)	Order code No. of poles
0.18	**FZ.29-LA63ME2**							
	245	7.0	11.51	3 380	20	9	**2KJ3301 - ■ BC11 - ■ ■ L1**	**P00**
	282	6.1	9.99	3 230	22	9	**2KJ3301 - ■ BC11 - ■ ■ K1**	**P00**
	291	5.9	9.69	3 190	24	9	**2KJ3301 - ■ BC11 - ■ ■ J1**	**P00**
	327	5.3	8.63	3 070	25	9	**2KJ3301 - ■ BC11 - ■ ■ H1**	**P00**
	354	4.9	7.97	3 000	25	9	**2KJ3301 - ■ BC11 - ■ ■ G1**	**P00**
0.25	**FD.79-LA71MH6**							
	2.4	990	357.00	13 600	1.0	39	**2KJ3405 - ■ CE11 - ■ ■ S1**	**P01**
	2.6	900	324.62	13 800	1.1	39	**2KJ3405 - ■ CE11 - ■ ■ R1**	**P01**
	3.1	765	276.09	14 000	1.3	39	**2KJ3405 - ■ CE11 - ■ ■ Q1**	**P01**
	3.4	695	250.99	14 200	1.4	39	**2KJ3405 - ■ CE11 - ■ ■ P1**	**P01**
	FD.79-LA71MG4							
	3.8	630	357.00	14 300	1.6	38	**2KJ3405 - ■ CD11 - ■ ■ S1**	
	4.2	570	324.62	14 400	1.7	38	**2KJ3405 - ■ CD11 - ■ ■ R1**	
	4.9	485	276.09	14 500	2.0	38	**2KJ3405 - ■ CD11 - ■ ■ Q1**	
	FD.69-LA71MH6							
	3.5	685	247.27	10 600	0.87	32	**2KJ3404 - ■ CE11 - ■ ■ P1**	**P01**
	FD.69-LA71MG4							
	3.9	615	348.40	10 800	0.97	31	**2KJ3404 - ■ CD11 - ■ ■ S1**	
	4.4	545	309.78	10 900	1.1	31	**2KJ3404 - ■ CD11 - ■ ■ R1**	
	5.0	480	272.00	11 100	1.2	31	**2KJ3404 - ■ CD11 - ■ ■ Q1**	
	5.5	435	247.27	11 200	1.4	31	**2KJ3404 - ■ CD11 - ■ ■ P1**	
	6.4	370	211.56	11 400	1.6	31	**2KJ3404 - ■ CD11 - ■ ■ N1**	
	7.0	340	192.32	11 400	1.8	31	**2KJ3404 - ■ CD11 - ■ ■ M1**	
	7.9	300	170.00	11 500	2.0	31	**2KJ3404 - ■ CD11 - ■ ■ L1**	
	FD.49-LA71MG4							
	4.1	585	330.98	7 270	0.82	26	**2KJ3403 - ■ CD11 - ■ ■ S1**	
	4.6	520	294.29	7 700	0.92	26	**2KJ3403 - ■ CD11 - ■ ■ R1**	
	5.2	455	258.40	8 110	1.1	26	**2KJ3403 - ■ CD11 - ■ ■ Q1**	
	5.7	415	234.91	8 220	1.2	26	**2KJ3403 - ■ CD11 - ■ ■ P1**	
	6.7	355	200.98	8 400	1.4	26	**2KJ3403 - ■ CD11 - ■ ■ N1**	
	7.4	320	182.71	8 500	1.5	26	**2KJ3403 - ■ CD11 - ■ ■ M1**	
	8.4	285	161.50	8 600	1.7	26	**2KJ3403 - ■ CD11 - ■ ■ L1**	
	9.2	260	146.82	8 670	1.8	26	**2KJ3403 - ■ CD11 - ■ ■ K1**	
	10	225	128.60	8 770	2.1	26	**2KJ3403 - ■ CD11 - ■ ■ J1**	
	FD.39-LA71MG4							
	7.0	335	191.87	5 650	0.85	17	**2KJ3402 - ■ CD11 - ■ ■ N1**	
	8.2	290	164.56	5 820	1.0	17	**2KJ3402 - ■ CD11 - ■ ■ M1**	
	9.0	265	149.60	5 910	1.1	17	**2KJ3402 - ■ CD11 - ■ ■ L1**	
	10	230	131.17	6 040	1.3	17	**2KJ3402 - ■ CD11 - ■ ■ K1**	
	12	205	117.08	6 130	1.4	17	**2KJ3402 - ■ CD11 - ■ ■ J1**	
	13	185	104.34	6 210	1.6	17	**2KJ3402 - ■ CD11 - ■ ■ H1**	
	14	170	96.31	6 260	1.7	17	**2KJ3402 - ■ CD11 - ■ ■ G1**	
	16	149	84.32	6 340	1.9	17	**2KJ3402 - ■ CD11 - ■ ■ F1**	
	18	131	73.93	6 410	2.2	17	**2KJ3402 - ■ CD11 - ■ ■ E1**	
	FZ.39-LA71MG4							
	23	103	57.99	6 510	2.2	17	**2KJ3302 - ■ CD11 - ■ ■ A2**	
	FD.29-LA71MG4							
	13	183	103.36	5 220	0.82	10	**2KJ3401 - ■ CD11 - ■ ■ F1**	
	15	159	89.78	5 220	0.94	10	**2KJ3401 - ■ CD11 - ■ ■ E1**	

Article No. supplement		
Shaft design	**1, 5 or 9**	➞ page 10/44
Frequency and voltage	**2 or 9**	➞ page 11/2
Gearbox mounting type	**A, D, F or H**	➞ page 10/37

© Siemens AG 2017

4

Selection and ordering data (continued)

P_{rated} kW	n_2 rpm	T_2 Nm	i -	F_{R2} N	f_B -	m kg	Article No. (Article No. supplement ➞ below)	Order code No. of poles
0.25	**FD.29-LA71MG4**							
	17	138	78.02	5 220	1.1	10	**2KJ3401 - ■ CD11 - ■ ■ D1**	
	19	125	70.43	5 220	1.2	10	**2KJ3401 - ■ CD11 - ■ ■ C1**	
	20	117	66.29	5 220	1.3	10	**2KJ3401 - ■ CD11 - ■ ■ B1**	
	23	102	57.79	5 220	1.5	10	**2KJ3401 - ■ CD11 - ■ ■ A1**	
	FZ.29-LA71MG4							
	24	100	56.73	5 220	1.5	10	**2KJ3301 - ■ CD11 - ■ ■ C2**	
	27	89	50.32	5 220	1.7	10	**2KJ3301 - ■ CD11 - ■ ■ B2**	
	31	77	43.66	5 220	1.9	10	**2KJ3301 - ■ CD11 - ■ ■ A2**	
	34	70	39.69	5 220	2.1	10	**2KJ3301 - ■ CD11 - ■ ■ X1**	
	40	60	34.04	5 220	2.5	10	**2KJ3301 - ■ CD11 - ■ ■ W1**	
	44	55	30.95	5 220	2.7	10	**2KJ3301 - ■ CD11 - ■ ■ V1**	
	50	48	27.13	5 220	3.1	10	**2KJ3301 - ■ CD11 - ■ ■ U1**	
	56	43	24.22	5 220	3.5	10	**2KJ3301 - ■ CD11 - ■ ■ T1**	
	63	38	21.58	5 110	3.9	10	**2KJ3301 - ■ CD11 - ■ ■ S1**	
	68	35	19.92	4 990	4.3	10	**2KJ3301 - ■ CD11 - ■ ■ R1**	
	77	31	17.44	4 800	4.9	10	**2KJ3301 - ■ CD11 - ■ ■ Q1**	
	88	27	15.29	4 610	5.5	10	**2KJ3301 - ■ CD11 - ■ ■ P1**	
	97	24	13.88	4 480	6.1	10	**2KJ3301 - ■ CD11 - ■ ■ N1**	
	103	23	13.06	4 400	6.5	10	**2KJ3301 - ■ CD11 - ■ ■ M1**	
	117	20	11.51	4 230	7.0	10	**2KJ3301 - ■ CD11 - ■ ■ L1**	
	135	18	9.99	4 050	7.7	10	**2KJ3301 - ■ CD11 - ■ ■ K1**	
	139	17	9.69	3 990	8.3	10	**2KJ3301 - ■ CD11 - ■ ■ J1**	
	156	15	8.63	3 850	8.5	10	**2KJ3301 - ■ CD11 - ■ ■ H1**	
	169	14	7.97	3 750	8.5	10	**2KJ3301 - ■ CD11 - ■ ■ G1**	
	193	12	6.98	3 610	10	10	**2KJ3301 - ■ CD11 - ■ ■ F1**	
	221	11	6.12	3 460	10	10	**2KJ3301 - ■ CD11 - ■ ■ E1**	
	243	9.8	5.55	3 350	11	10	**2KJ3301 - ■ CD11 - ■ ■ D1**	
	259	9.2	5.22	3 290	12	10	**2KJ3301 - ■ CD11 - ■ ■ C1**	
	293	8.1	4.60	3 160	12	10	**2KJ3301 - ■ CD11 - ■ ■ B1**	
	338	7.1	4.00	3 020	13	10	**2KJ3301 - ■ CD11 - ■ ■ A1**	
	FZ.29-LA63MF2							
	162	15	17.44	3 820	10	9	**2KJ3301 - ■ BD11 - ■ ■ Q1**	**P00**
	185	13	15.29	3 670	12	9	**2KJ3301 - ■ BD11 - ■ ■ P1**	**P00**
	204	12	13.88	3 560	13	9	**2KJ3301 - ■ BD11 - ■ ■ N1**	**P00**
	217	11	13.06	3 490	14	9	**2KJ3301 - ■ BD11 - ■ ■ M1**	**P00**
	246	9.7	11.51	3 360	15	9	**2KJ3301 - ■ BD11 - ■ ■ L1**	**P00**
0.37	**FD.79-LA71MH4**							
	3.8	920	357.00	13 700	1.1	39	**2KJ3405 - ■ CE11 - ■ ■ S1**	
	4.2	835	324.62	13 900	1.2	39	**2KJ3405 - ■ CE11 - ■ ■ R1**	
	5.0	710	276.09	14 100	1.4	39	**2KJ3405 - ■ CE11 - ■ ■ Q1**	
	5.5	645	250.99	14 300	1.5	39	**2KJ3405 - ■ CE11 - ■ ■ P1**	
	6.1	575	223.94	14 400	1.7	39	**2KJ3405 - ■ CE11 - ■ ■ N1**	
	6.8	515	200.80	14 500	1.9	39	**2KJ3405 - ■ CE11 - ■ ■ M1**	
	7.6	465	180.99	14 500	2.1	39	**2KJ3405 - ■ CE11 - ■ ■ L1**	
	FD.69-LA71MH4							
	5.0	700	272.00	10 600	0.86	32	**2KJ3404 - ■ CE11 - ■ ■ Q1**	
	5.5	635	247.27	10 700	0.94	32	**2KJ3404 - ■ CE11 - ■ ■ P1**	
	6.5	545	211.56	10 900	1.1	32	**2KJ3404 - ■ CE11 - ■ ■ N1**	

Article No. supplement		
Shaft design	**1, 5 or 9**	➞ page 10/44
Frequency and voltage	**2 or 9**	➞ page 11/2
Gearbox mounting type	**A, D, F or H**	➞ page 10/37

© Siemens AG 2017

Selection and ordering data (continued)

P_{rated}	n_2	T_2	i	F_{R2}	f_B	m	Article No.	Order code
kW	rpm	Nm	-	N	-	kg	(Article No. supplement ➞ below)	No. of poles
0.37	**FD.69-LA71MH4**							
	7.1	495	192.32	11 100	1.2	32	**2KJ3404 - ■ CE11 - ■ ■ M1**	
	8.1	435	170.00	11 200	1.4	32	**2KJ3404 - ■ CE11 - ■ ■ L1**	
	8.9	395	154.55	11 300	1.5	32	**2KJ3404 - ■ CE11 - ■ ■ K1**	
	10	345	135.37	11 400	1.7	32	**2KJ3404 - ■ CE11 - ■ ■ J1**	
	11	320	124.96	11 500	1.9	32	**2KJ3404 - ■ CE11 - ■ ■ H1**	
	12	285	110.63	11 600	2.1	32	**2KJ3404 - ■ CE11 - ■ ■ G1**	
	FD.49-LA71MH4							
	6.8	515	200.98	7 720	0.93	27	**2KJ3403 - ■ CE11 - ■ ■ N1**	
	7.5	470	182.71	8 020	1.0	27	**2KJ3403 - ■ CE11 - ■ ■ M1**	
	8.5	415	161.50	8 220	1.2	27	**2KJ3403 - ■ CE11 - ■ ■ L1**	
	9.3	375	146.82	8 340	1.3	27	**2KJ3403 - ■ CE11 - ■ ■ K1**	
	11	330	128.60	8 470	1.4	27	**2KJ3403 - ■ CE11 - ■ ■ J1**	
	12	305	118.71	8 540	1.6	27	**2KJ3403 - ■ CE11 - ■ ■ H1**	
	13	270	105.10	8 640	1.8	27	**2KJ3403 - ■ CE11 - ■ ■ G1**	
	16	225	87.48	8 770	2.1	27	**2KJ3403 - ■ CE11 - ■ ■ F1**	
	17	210	82.33	8 820	2.3	27	**2KJ3403 - ■ CE11 - ■ ■ E1**	
	FD.39-LA71MH4							
	10	335	131.17	5 650	0.86	18	**2KJ3402 - ■ CE11 - ■ ■ K1**	
	12	300	117.08	5 780	0.96	18	**2KJ3402 - ■ CE11 - ■ ■ J1**	
	13	265	104.34	5 910	1.1	18	**2KJ3402 - ■ CE11 - ■ ■ H1**	
	14	245	96.31	5 980	1.2	18	**2KJ3402 - ■ CE11 - ■ ■ G1**	
	16	215	84.32	6 100	1.3	18	**2KJ3402 - ■ CE11 - ■ ■ F1**	
	19	191	73.93	6 180	1.5	18	**2KJ3402 - ■ CE11 - ■ ■ E1**	
	20	173	67.07	6 250	1.7	18	**2KJ3402 - ■ CE11 - ■ ■ D1**	
	22	163	63.13	6 290	1.8	18	**2KJ3402 - ■ CE11 - ■ ■ C1**	
	25	144	55.65	6 360	2.0	18	**2KJ3402 - ■ CE11 - ■ ■ B1**	
	28	125	48.29	6 430	2.3	18	**2KJ3402 - ■ CE11 - ■ ■ A1**	
	FZ.39-LA71MH4							
	21	168	65.21	6 270	1.7	18	**2KJ3302 - ■ CE11 - ■ ■ B2**	
	24	150	57.99	6 340	1.5	18	**2KJ3302 - ■ CE11 - ■ ■ A2**	
	27	131	50.91	6 410	1.8	18	**2KJ3302 - ■ CE11 - ■ ■ X1**	
	30	119	46.29	6 450	2.1	18	**2KJ3302 - ■ CE11 - ■ ■ W1**	
	FD.29-LA71MH4							
	19	182	70.43	5 220	0.83	12	**2KJ3401 - ■ CE11 - ■ ■ C1**	
	21	171	66.29	5 220	0.88	12	**2KJ3401 - ■ CE11 - ■ ■ B1**	
	24	149	57.79	5 220	1.0	12	**2KJ3401 - ■ CE11 - ■ ■ A1**	
	FZ.29-LA71MH4							
	24	146	56.73	5 220	1.0	11	**2KJ3301 - ■ CE11 - ■ ■ C2**	
	27	130	50.32	5 220	1.2	11	**2KJ3301 - ■ CE11 - ■ ■ B2**	
	31	113	43.66	5 220	1.3	11	**2KJ3301 - ■ CE11 - ■ ■ A2**	
	35	102	39.69	5 220	1.5	11	**2KJ3301 - ■ CE11 - ■ ■ X1**	
	40	88	34.04	5 220	1.7	11	**2KJ3301 - ■ CE11 - ■ ■ W1**	
	44	80	30.95	5 220	1.9	11	**2KJ3301 - ■ CE11 - ■ ■ V1**	
	50	70	27.13	5 220	2.1	11	**2KJ3301 - ■ CE11 - ■ ■ U1**	
	57	62	24.22	5 100	2.4	11	**2KJ3301 - ■ CE11 - ■ ■ T1**	
	63	56	21.58	4 930	2.7	11	**2KJ3301 - ■ CE11 - ■ ■ S1**	
	69	51	19.92	4 830	2.9	11	**2KJ3301 - ■ CE11 - ■ ■ R1**	
	79	45	17.44	4 650	3.3	11	**2KJ3301 - ■ CE11 - ■ ■ Q1**	

Article No. supplement		
Shaft design	**1, 5 or 9**	➞ page 10/44
Frequency and voltage	**2 or 9**	➞ page 11/2
Gearbox mounting type	**A, D, F or H**	➞ page 10/37

© Siemens AG 2017

4

Selection and ordering data (continued)

P_{rated} kW	n_2 rpm	T_2 Nm	i -	F_{R2} N	f_B -	m kg	Article No. (Article No. supplement ➞ below)	Order code No. of poles
0.37	**FZ.29-LA71MH4**							
	90	39	15.29	4 490	3.8	11	**2KJ3301 - ■ CE11 - ■ ■ P1**	
	99	36	13.88	4 360	4.2	11	**2KJ3301 - ■ CE11 - ■ ■ N1**	
	105	34	13.06	4 280	4.5	11	**2KJ3301 - ■ CE11 - ■ ■ M1**	
	119	30	11.51	4 130	4.8	11	**2KJ3301 - ■ CE11 - ■ ■ L1**	
	137	26	9.99	3 960	5.3	11	**2KJ3301 - ■ CE11 - ■ ■ K1**	
	141	25	9.69	3 890	5.7	11	**2KJ3301 - ■ CE11 - ■ ■ J1**	
	159	22	8.63	3 760	5.8	11	**2KJ3301 - ■ CE11 - ■ ■ H1**	
	172	21	7.97	3 670	5.8	11	**2KJ3301 - ■ CE11 - ■ ■ G1**	
	196	18	6.98	3 530	6.8	11	**2KJ3301 - ■ CE11 - ■ ■ F1**	
	224	16	6.12	3 390	7.2	11	**2KJ3301 - ■ CE11 - ■ ■ E1**	
	247	14	5.55	3 300	7.5	11	**2KJ3301 - ■ CE11 - ■ ■ D1**	
	262	14	5.22	3 230	7.9	11	**2KJ3301 - ■ CE11 - ■ ■ C1**	
	298	12	4.60	3 110	8.2	11	**2KJ3301 - ■ CE11 - ■ ■ B1**	
	342	10	4.00	2 980	8.8	11	**2KJ3301 - ■ CE11 - ■ ■ A1**	
	FZ.29-LA71MG2							
	157	22	17.44	3 810	6.7	10	**2KJ3301 - ■ CD11 - ■ ■ Q1**	**P00**
	179	20	15.29	3 650	7.6	10	**2KJ3301 - ■ CD11 - ■ ■ P1**	**P00**
	197	18	13.88	3 550	8.4	10	**2KJ3301 - ■ CD11 - ■ ■ N1**	**P00**
	210	17	13.06	3 480	8.9	10	**2KJ3301 - ■ CD11 - ■ ■ M1**	**P00**
	238	15	11.51	3 350	9.6	10	**2KJ3301 - ■ CD11 - ■ ■ L1**	**P00**
	274	13	9.99	3 200	11	10	**2KJ3301 - ■ CD11 - ■ ■ K1**	**P00**
	283	12	9.69	3 160	11	10	**2KJ3301 - ■ CD11 - ■ ■ J1**	**P00**
	317	11	8.63	3 050	12	10	**2KJ3301 - ■ CD11 - ■ ■ H1**	**P00**
	344	10	7.97	2 980	12	10	**2KJ3301 - ■ CD11 - ■ ■ G1**	**P00**
	393	9	6.98	2 850	14	10	**2KJ3301 - ■ CD11 - ■ ■ F1**	**P00**
	448	7.9	6.12	2 740	14	10	**2KJ3301 - ■ CD11 - ■ ■ E1**	**P00**
	494	7.2	5.55	2 650	15	10	**2KJ3301 - ■ CD11 - ■ ■ D1**	**P00**
0.55	**FD.89-LE80MB4**							
	4.3	1 220	335.30	17 400	1.5	73	**2KJ3406 - ■ DB21 - ■ ■ S1**	
	4.7	1 110	304.82	17 400	1.7	73	**2KJ3406 - ■ DB21 - ■ ■ R1**	
	5.3	995	273.41	17 400	1.9	73	**2KJ3406 - ■ DB21 - ■ ■ Q1**	
	5.9	895	245.82	17 400	2.1	73	**2KJ3406 - ■ DB21 - ■ ■ P1**	
	FD.79-LE80MB4							
	4.4	1 180	324.62	13 200	0.84	42	**2KJ3405 - ■ DB21 - ■ ■ R1**	
	5.2	1 000	276.09	13 600	0.99	42	**2KJ3405 - ■ DB21 - ■ ■ Q1**	
	5.7	915	250.99	13 700	1.1	42	**2KJ3405 - ■ DB21 - ■ ■ P1**	
	6.4	815	223.94	13 900	1.2	42	**2KJ3405 - ■ DB21 - ■ ■ N1**	
	7.2	730	200.80	14 100	1.4	42	**2KJ3405 - ■ DB21 - ■ ■ M1**	
	8.0	660	180.99	14 200	1.5	42	**2KJ3405 - ■ DB21 - ■ ■ L1**	
	8.6	605	167.07	14 400	1.6	42	**2KJ3405 - ■ DB21 - ■ ■ K1**	
	9.4	555	152.51	14 500	1.8	42	**2KJ3405 - ■ DB21 - ■ ■ J1**	
	11	460	126.54	14 500	2.2	42	**2KJ3405 - ■ DB21 - ■ ■ H1**	
	FD.79-LA71ZML4							
	4.2	1 240	324.62	13 100	0.80	39	**2KJ3405 - ■ CH11 - ■ ■ R1**	
	5.0	1 050	276.09	13 500	0.94	39	**2KJ3405 - ■ CH11 - ■ ■ Q1**	
	5.5	960	250.99	13 700	1.0	39	**2KJ3405 - ■ CH11 - ■ ■ P1**	
	6.1	855	223.94	13 900	1.2	39	**2KJ3405 - ■ CH11 - ■ ■ N1**	
	6.8	770	200.80	14 000	1.3	39	**2KJ3405 - ■ CH11 - ■ ■ M1**	

Article No. supplement		
Shaft design	**1, 5 or 9**	➞ page 10/44
Frequency and voltage	**2 or 9**	➞ page 11/2
Gearbox mounting type	**A, D, F or H**	➞ page 10/37

© Siemens AG 2017

Selection and ordering data (continued)

P_{rated}	n_2	T_2	i	F_{R2}	f_B	m	Article No.	Order code
kW	rpm	Nm	-	N	-	kg	(Article No. supplement ➞ below)	No. of poles
0.55	**FD.79-LA71ZML4**							
	7.6	690	180.99	14 200	1.4	39	**2KJ3405 - ■ CH11 - ■ ■ L1**	
	8.2	640	167.07	14 300	1.6	39	**2KJ3405 - ■ CH11 - ■ ■ K1**	
	9.0	585	152.51	14 400	1.7	39	**2KJ3405 - ■ CH11 - ■ ■ J1**	
	11	485	126.54	14 500	2.1	39	**2KJ3405 - ■ CH11 - ■ ■ H1**	
	12	455	119.10	14 500	2.2	39	**2KJ3405 - ■ CH11 - ■ ■ G1**	
	FD.69-LE80MB4							
	7.5	700	192.32	10 600	0.86	35	**2KJ3404 - ■ DB21 - ■ ■ M1**	
	8.5	620	170.00	10 800	0.97	35	**2KJ3404 - ■ DB21 - ■ ■ L1**	
	9.3	560	154.55	10 900	1.1	35	**2KJ3404 - ■ DB21 - ■ ■ K1**	
	11	490	135.37	11 100	1.2	35	**2KJ3404 - ■ DB21 - ■ ■ J1**	
	12	455	124.96	11 200	1.3	35	**2KJ3404 - ■ DB21 - ■ ■ H1**	
	13	400	110.63	11 300	1.5	35	**2KJ3404 - ■ DB21 - ■ ■ G1**	
	16	335	92.08	11 400	1.8	35	**2KJ3404 - ■ DB21 - ■ ■ F1**	
	17	315	86.67	11 500	1.9	35	**2KJ3404 - ■ DB21 - ■ ■ E1**	
	19	280	77.65	11 600	2.1	35	**2KJ3404 - ■ DB21 - ■ ■ D1**	
	FD.69-LA71ZML4							
	7.1	735	192.32	10 500	0.81	32	**2KJ3404 - ■ CH11 - ■ ■ M1**	
	8.1	650	170.00	10 700	0.92	32	**2KJ3404 - ■ CH11 - ■ ■ L1**	
	8.9	590	154.55	10 800	1.0	32	**2KJ3404 - ■ CH11 - ■ ■ K1**	
	10	515	135.37	11 000	1.2	32	**2KJ3404 - ■ CH11 - ■ ■ J1**	
	11	475	124.96	11 100	1.3	32	**2KJ3404 - ■ CH11 - ■ ■ H1**	
	12	420	110.63	11 200	1.4	32	**2KJ3404 - ■ CH11 - ■ ■ G1**	
	15	350	92.08	11 400	1.7	32	**2KJ3404 - ■ CH11 - ■ ■ F1**	
	16	330	86.67	11 400	1.8	32	**2KJ3404 - ■ CH11 - ■ ■ E1**	
	18	295	77.65	11 500	2.0	32	**2KJ3404 - ■ CH11 - ■ ■ D1**	
	21	250	66.11	11 600	2.4	32	**2KJ3404 - ■ CH11 - ■ ■ C1**	
	FZ.69-LA71ZML4							
	21	245	64.67	11 600	2.4	32	**2KJ3304 - ■ CH11 - ■ ■ X1**	
	FD.49-LA71ZML4							
	9.3	560	146.82	7 430	0.85	27	**2KJ3403 - ■ CH11 - ■ ■ K1**	
	11	490	128.60	7 890	0.97	27	**2KJ3403 - ■ CH11 - ■ ■ J1**	
	12	455	118.71	8 110	1.1	27	**2KJ3403 - ■ CH11 - ■ ■ H1**	
	13	400	105.10	8 270	1.2	27	**2KJ3403 - ■ CH11 - ■ ■ G1**	
	16	335	87.48	8 460	1.4	27	**2KJ3403 - ■ CH11 - ■ ■ F1**	
	17	315	82.33	8 510	1.5	27	**2KJ3403 - ■ CH11 - ■ ■ E1**	
	19	280	73.77	8 610	1.7	27	**2KJ3403 - ■ CH11 - ■ ■ D1**	
	22	240	62.81	8 730	2.0	27	**2KJ3403 - ■ CH11 - ■ ■ C1**	
	FD.49-LE80MB4							
	8.9	585	161.50	7 270	0.81	30	**2KJ3403 - ■ DB21 - ■ ■ L1**	
	9.8	535	146.82	7 600	0.90	30	**2KJ3403 - ■ DB21 - ■ ■ K1**	
	11	465	128.60	8 060	1.0	30	**2KJ3403 - ■ DB21 - ■ ■ J1**	
	12	430	118.71	8 180	1.1	30	**2KJ3403 - ■ DB21 - ■ ■ H1**	
	14	380	105.10	8 330	1.3	30	**2KJ3403 - ■ DB21 - ■ ■ G1**	
	16	315	87.48	8 510	1.5	30	**2KJ3403 - ■ DB21 - ■ ■ F1**	
	17	300	82.33	8 560	1.6	30	**2KJ3403 - ■ DB21 - ■ ■ E1**	
	20	265	73.77	8 660	1.8	30	**2KJ3403 - ■ DB21 - ■ ■ D1**	
	23	225	62.81	8 770	2.1	30	**2KJ3403 - ■ DB21 - ■ ■ C1**	
	27	196	53.83	8 450	2.4	30	**2KJ3403 - ■ DB21 - ■ ■ B1**	

Article No. supplement		
Shaft design	**1, 5 or 9**	➞ page 10/44
Frequency and voltage	**2 or 9**	➞ page 11/2
Gearbox mounting type	**A, D, F or H**	➞ page 10/37

© Siemens AG 2017

4

Selection and ordering data (continued)

P_{rated} kW	n_2 rpm	T_2 Nm	i -	F_{R2} N	f_B -	m kg	Article No. (Article No. supplement ➞ below)	Order code No. of poles
0.55	**FZ.49-LA71ZML4**							
	22	235	61.43	8 750	2.0	27	**2KJ3303 - ■ CH11 - ■ ■ X1**	
	25	210	55.85	8 640	2.2	27	**2KJ3303 - ■ CH11 - ■ ■ W1**	
	FZ.49-LE80MB4							
	23	220	61.43	8 730	2.1	29	**2KJ3303 - ■ DB21 - ■ ■ X1**	
	26	200	55.85	8 540	2.4	29	**2KJ3303 - ■ DB21 - ■ ■ W1**	
	FD.39-LA71ZML4							
	16	320	84.32	5 700	0.9	18	**2KJ3402 - ■ CH11 - ■ ■ F1**	
	19	280	73.93	5 850	1.0	18	**2KJ3402 - ■ CH11 - ■ ■ E1**	
	20	255	67.07	5 950	1.1	18	**2KJ3402 - ■ CH11 - ■ ■ D1**	
	22	240	63.13	6 000	1.2	18	**2KJ3402 - ■ CH11 - ■ ■ C1**	
	25	210	55.65	6 110	1.4	18	**2KJ3402 - ■ CH11 - ■ ■ B1**	
	28	185	48.29	6 210	1.6	18	**2KJ3402 - ■ CH11 - ■ ■ A1**	
	FD.39-LE80MB4							
	15	350	96.31	5 590	0.83	20	**2KJ3402 - ■ DB21 - ■ ■ G1**	
	17	305	84.32	5 760	0.94	20	**2KJ3402 - ■ DB21 - ■ ■ F1**	
	19	270	73.93	5 890	1.1	20	**2KJ3402 - ■ DB21 - ■ ■ E1**	
	21	245	67.07	5 980	1.2	20	**2KJ3402 - ■ DB21 - ■ ■ D1**	
	23	230	63.13	6 040	1.3	20	**2KJ3402 - ■ DB21 - ■ ■ C1**	
	26	200	55.65	6 150	1.4	20	**2KJ3402 - ■ DB21 - ■ ■ B1**	
	30	176	48.29	6 240	1.6	20	**2KJ3402 - ■ DB21 - ■ ■ A1**	
	FZ.39-LA71ZML4							
	21	250	65.21	5 970	1.2	18	**2KJ3302 - ■ CH11 - ■ ■ B2**	
	24	220	57.99	6 080	1.0	18	**2KJ3302 - ■ CH11 - ■ ■ A2**	
	27	195	50.91	6 170	1.2	18	**2KJ3302 - ■ CH11 - ■ ■ X1**	
	30	177	46.29	6 240	1.4	18	**2KJ3302 - ■ CH11 - ■ ■ W1**	
	35	152	39.60	6 330	1.9	18	**2KJ3302 - ■ CH11 - ■ ■ V1**	
	38	138	36.00	6 380	1.8	18	**2KJ3302 - ■ CH11 - ■ ■ U1**	
	43	122	31.82	6 440	2.3	18	**2KJ3302 - ■ CH11 - ■ ■ T1**	
	47	111	28.93	6 480	2.5	18	**2KJ3302 - ■ CH11 - ■ ■ S1**	
	54	97	25.34	6 470	2.7	18	**2KJ3302 - ■ CH11 - ■ ■ R1**	
	59	90	23.39	6 340	2.9	18	**2KJ3302 - ■ CH11 - ■ ■ Q1**	
	66	79	20.71	6 140	3.1	18	**2KJ3302 - ■ CH11 - ■ ■ P1**	
	FZ.39-LE80MB4							
	25	210	57.99	6 110	1.1	20	**2KJ3302 - ■ DB21 - ■ ■ A2**	
	28	186	50.91	6 200	1.3	20	**2KJ3302 - ■ DB21 - ■ ■ X1**	
	31	169	46.29	6 270	1.5	20	**2KJ3302 - ■ DB21 - ■ ■ W1**	
	36	144	39.60	6 360	2.0	20	**2KJ3302 - ■ DB21 - ■ ■ V1**	
	40	131	36.00	6 410	1.9	20	**2KJ3302 - ■ DB21 - ■ ■ U1**	
	45	116	31.82	6 460	2.5	20	**2KJ3302 - ■ DB21 - ■ ■ T1**	
	50	106	28.93	6 500	2.6	20	**2KJ3302 - ■ DB21 - ■ ■ S1**	
	57	92	25.34	6 390	2.9	20	**2KJ3302 - ■ DB21 - ■ ■ R1**	
	62	85	23.39	6 260	3.0	20	**2KJ3302 - ■ DB21 - ■ ■ Q1**	
	FZ.29-LE80MB4							
	29	184	50.32	5 220	0.82	14	**2KJ3301 - ■ DB21 - ■ ■ B2**	
	33	159	43.66	5 220	0.94	14	**2KJ3301 - ■ DB21 - ■ ■ A2**	
	36	145	39.69	5 220	1.0	14	**2KJ3301 - ■ DB21 - ■ ■ X1**	
	42	124	34.04	5 150	1.2	14	**2KJ3301 - ■ DB21 - ■ ■ W1**	
	47	113	30.95	5 050	1.3	14	**2KJ3301 - ■ DB21 - ■ ■ V1**	
	53	99	27.13	4 910	1.5	14	**2KJ3301 - ■ DB21 - ■ ■ U1**	

Article No. supplement		
Shaft design	**1, 5 or 9**	➞ page 10/44
Frequency and voltage	**2 or 9**	➞ page 11/2
Gearbox mounting type	**A, D, F or H**	➞ page 10/37

© Siemens AG 2017

Selection and ordering data (continued)

P_{rated}	n_2	T_2	i	F_{R2}	f_B	m	Article No.	Order code
kW	rpm	Nm	-	N	-	kg	(Article No. supplement ➞ below)	No. of poles
0.55	**FZ.29-LE80MB4**							
	59	88	24.22	4 790	1.7	14	**2KJ3301 - ■ DB21 - ■ ■ T1**	
	67	79	21.58	4 650	1.9	14	**2KJ3301 - ■ DB21 - ■ ■ S1**	
	72	73	19.92	4 560	2.1	14	**2KJ3301 - ■ DB21 - ■ ■ R1**	
	83	64	17.44	4 410	2.4	14	**2KJ3301 - ■ DB21 - ■ ■ Q1**	
	94	56	15.29	4 270	2.7	14	**2KJ3301 - ■ DB21 - ■ ■ P1**	
	104	51	13.88	4 160	3.0	14	**2KJ3301 - ■ DB21 - ■ ■ N1**	
	110	48	13.06	4 090	3.1	14	**2KJ3301 - ■ DB21 - ■ ■ M1**	
	125	42	11.51	3 960	3.4	14	**2KJ3301 - ■ DB21 - ■ ■ L1**	
	144	36	9.99	3 810	3.7	14	**2KJ3301 - ■ DB21 - ■ ■ K1**	
	149	35	9.69	3 720	4.0	14	**2KJ3301 - ■ DB21 - ■ ■ J1**	
	167	32	8.63	3 600	4.1	14	**2KJ3301 - ■ DB21 - ■ ■ H1**	
	181	29	7.97	3 530	4.1	14	**2KJ3301 - ■ DB21 - ■ ■ G1**	
	FZ.29-LA71ZML4							
	31	167	43.66	5 220	0.90	11	**2KJ3301 - ■ CH11 - ■ ■ A2**	
	35	152	39.69	5 220	0.99	11	**2KJ3301 - ■ CH11 - ■ ■ X1**	
	40	131	34.04	5 200	1.1	11	**2KJ3301 - ■ CH11 - ■ ■ W1**	
	44	119	30.95	5 100	1.3	11	**2KJ3301 - ■ CH11 - ■ ■ V1**	
	50	104	27.13	4 960	1.4	11	**2KJ3301 - ■ CH11 - ■ ■ U1**	
	57	93	24.22	4 840	1.6	11	**2KJ3301 - ■ CH11 - ■ ■ T1**	
	63	83	21.58	4 710	1.8	11	**2KJ3301 - ■ CH11 - ■ ■ S1**	
	69	76	19.92	4 620	2.0	11	**2KJ3301 - ■ CH11 - ■ ■ R1**	
	79	67	17.44	4 470	2.2	11	**2KJ3301 - ■ CH11 - ■ ■ Q1**	
	90	59	15.29	4 320	2.6	11	**2KJ3301 - ■ CH11 - ■ ■ P1**	
	99	53	13.88	4 220	2.8	11	**2KJ3301 - ■ CH11 - ■ ■ N1**	
	105	50	13.06	4 150	3.0	11	**2KJ3301 - ■ CH11 - ■ ■ M1**	
	119	44	11.51	4 010	3.2	11	**2KJ3301 - ■ CH11 - ■ ■ L1**	
	137	38	9.99	3 860	3.6	11	**2KJ3301 - ■ CH11 - ■ ■ K1**	
	141	37	9.69	3 770	3.8	11	**2KJ3301 - ■ CH11 - ■ ■ J1**	
	159	33	8.63	3 660	3.9	11	**2KJ3301 - ■ CH11 - ■ ■ H1**	
	172	31	7.97	3 570	3.9	11	**2KJ3301 - ■ CH11 - ■ ■ G1**	
0.75	**FD.129-LE90SQ6P**							
	2.2	3 190	413	37 500	1.5	171	**2KJ3408 - ■ EC23 - ■ ■ T1**	**P01**
	2.4	2 950	381	37 500	1.6	171	**2KJ3408 - ■ EC23 - ■ ■ S1**	**P01**
	2.6	2 710	351	37 500	1.8	171	**2KJ3408 - ■ EC23 - ■ ■ R1**	**P01**
	FD.109-LE90SQ6P							
	2.3	3 170	410.00	25 000	0.98	118	**2KJ3407 - ■ EC23 - ■ ■ T1**	**P01**
	2.5	2 860	370.00	25 000	1.1	118	**2KJ3407 - ■ EC23 - ■ ■ S1**	**P01**
	2.8	2 590	335.70	25 000	1.2	118	**2KJ3407 - ■ EC23 - ■ ■ R1**	**P01**
	3.0	2 390	309.87	25 000	1.3	118	**2KJ3407 - ■ EC23 - ■ ■ Q1**	**P01**
	3.3	2 180	281.68	25 000	1.4	118	**2KJ3407 - ■ EC23 - ■ ■ P1**	**P01**
	FD.89-LE90SQ6P							
	3.4	2 110	273.41	17 400	0.87	78	**2KJ3406 - ■ EC23 - ■ ■ Q1**	**P01**
	3.8	1 900	245.82	17 400	0.97	78	**2KJ3406 - ■ EC23 - ■ ■ P1**	**P01**
	FD.89-LE80ZMQ4P							
	4.3	1 650	335.30	17 400	1.1	75	**2KJ3406 - ■ DF23 - ■ ■ S1**	
	4.8	1 500	304.82	17 400	1.2	75	**2KJ3406 - ■ DF23 - ■ ■ R1**	
	5.3	1 350	273.41	17 400	1.4	75	**2KJ3406 - ■ DF23 - ■ ■ Q1**	
	5.9	1 210	245.82	17 400	1.5	75	**2KJ3406 - ■ DF23 - ■ ■ P1**	
	6.5	1 090	222.33	17 400	1.7	75	**2KJ3406 - ■ DF23 - ■ ■ N1**	

Article No. supplement		
Shaft design	**1, 5 or 9**	➞ page 10/44
Frequency and voltage	**2 or 9**	➞ page 11/2
Gearbox mounting type	**A, D, F or H**	➞ page 10/37

© Siemens AG 2017

4

Selection and ordering data (continued)

P_{rated} kW	n_2 rpm	T_2 Nm	i -	F_{R2} N	f_B -	m kg	Article No. (Article No. supplement ➞ below)	Order code No. of poles
0.75	**FD.89-LE80ZMQ4P**							
	7.1	1 010	205.23	17 400	1.8	75	**2KJ3406 - ■ DF23 - ■ ■ M1**	
	7.7	925	188.00	17 400	2.0	75	**2KJ3406 - ■ DF23 - ■ ■ L1**	
	FD.79-LE80ZMQ4P							
	5.8	1 240	250.99	13 100	0.81	44	**2KJ3405 - ■ DF23 - ■ ■ P1**	
	6.5	1 100	223.94	13 400	0.90	44	**2KJ3405 - ■ DF23 - ■ ■ N1**	
	7.2	990	200.80	13 600	1.0	44	**2KJ3405 - ■ DF23 - ■ ■ M1**	
	8.0	890	180.99	13 800	1.1	44	**2KJ3405 - ■ DF23 - ■ ■ L1**	
	8.7	825	167.07	13 900	1.2	44	**2KJ3405 - ■ DF23 - ■ ■ K1**	
	9.5	750	152.51	14 100	1.3	44	**2KJ3405 - ■ DF23 - ■ ■ J1**	
	11	625	126.54	14 300	1.6	44	**2KJ3405 - ■ DF23 - ■ ■ H1**	
	12	585	119.10	14 400	1.7	44	**2KJ3405 - ■ DF23 - ■ ■ G1**	
	13	555	112.48	14 500	1.8	44	**2KJ3405 - ■ DF23 - ■ ■ F1**	
	15	470	95.71	14 500	2.1	44	**2KJ3405 - ■ DF23 - ■ ■ E1**	
	FD.69-LE80ZMQ4P							
	11	665	135.37	10 700	0.90	37	**2KJ3404 - ■ DF23 - ■ ■ J1**	
	12	615	124.96	10 800	0.97	37	**2KJ3404 - ■ DF23 - ■ ■ H1**	
	13	545	110.63	10 900	1.1	37	**2KJ3404 - ■ DF23 - ■ ■ G1**	
	16	455	92.08	11 200	1.3	37	**2KJ3404 - ■ DF23 - ■ ■ F1**	
	17	425	86.67	11 200	1.4	37	**2KJ3404 - ■ DF23 - ■ ■ E1**	
	19	380	77.65	11 300	1.6	37	**2KJ3404 - ■ DF23 - ■ ■ D1**	
	22	325	66.11	11 400	1.8	37	**2KJ3404 - ■ DF23 - ■ ■ C1**	
	26	280	56.67	11 000	2.1	37	**2KJ3404 - ■ DF23 - ■ ■ B1**	
	30	240	48.80	10 600	2.5	37	**2KJ3404 - ■ DF23 - ■ ■ A1**	
	FZ.69-LE80ZMQ4P							
	22	315	64.67	11 400	1.9	36	**2KJ3304 - ■ DF23 - ■ ■ X1**	
	25	290	58.79	11 100	2.1	36	**2KJ3304 - ■ DF23 - ■ ■ W1**	
	29	245	50.00	10 700	2.4	36	**2KJ3304 - ■ DF23 - ■ ■ V1**	
	FD.49-LE80ZMQ4P							
	12	585	118.71	7 270	0.82	32	**2KJ3403 - ■ DF23 - ■ ■ H1**	
	14	515	105.10	7 720	0.92	32	**2KJ3403 - ■ DF23 - ■ ■ G1**	
	17	430	87.48	8 180	1.1	32	**2KJ3403 - ■ DF23 - ■ ■ F1**	
	18	405	82.33	8 250	1.2	32	**2KJ3403 - ■ DF23 - ■ ■ E1**	
	20	360	73.77	8 380	1.3	32	**2KJ3403 - ■ DF23 - ■ ■ D1**	
	23	310	62.81	8 190	1.5	32	**2KJ3403 - ■ DF23 - ■ ■ C1**	
	27	265	53.83	7 970	1.8	32	**2KJ3403 - ■ DF23 - ■ ■ B1**	
	31	225	46.36	7 760	2.1	32	**2KJ3403 - ■ DF23 - ■ ■ A1**	
	FZ.49-LE80ZMQ4P							
	24	300	61.43	8 180	1.6	31	**2KJ3303 - ■ DF23 - ■ ■ X1**	
	26	275	55.85	8 030	1.7	31	**2KJ3303 - ■ DF23 - ■ ■ W1**	
	31	235	47.50	7 770	2.0	31	**2KJ3303 - ■ DF23 - ■ ■ V1**	
	34	210	43.18	7 640	2.3	31	**2KJ3303 - ■ DF23 - ■ ■ U1**	
	38	190	38.53	7 440	2.5	31	**2KJ3303 - ■ DF23 - ■ ■ T1**	
	FD.39-LE80ZMQ4P							
	22	330	67.07	5 670	0.88	22	**2KJ3402 - ■ DF23 - ■ ■ D1**	
	23	310	63.13	5 740	0.93	22	**2KJ3402 - ■ DF23 - ■ ■ C1**	
	26	275	55.65	5 870	1.1	22	**2KJ3402 - ■ DF23 - ■ ■ B1**	
	30	235	48.29	6 020	1.2	22	**2KJ3402 - ■ DF23 - ■ ■ A1**	
	FZ.39-LE80ZMQ4P							
	25	285	57.99	5 830	0.80	22	**2KJ3302 - ■ DF23 - ■ ■ A2**	

Article No. supplement		
Shaft design	**1, 5 or 9**	➞ page 10/44
Frequency and voltage	**2 or 9**	➞ page 11/2
Gearbox mounting type	**A, D, F or H**	➞ page 10/37

© Siemens AG 2017

Selection and ordering data (continued)

P_{rated}	n_2	T_2	i	F_{R2}	f_B	m	Article No.	Order code
kW	rpm	Nm	-	N	-	kg	(Article No. supplement ➞ below)	No. of poles
0.75	**FZ.39-LE80ZMQ4P**							
	28	250	50.91	5 970	0.95	22	**2KJ3302 - ■ DF23 - ■ ■ X1**	
	31	225	46.29	6 060	1.1	22	**2KJ3302 - ■ DF23 - ■ ■ W1**	
	37	196	39.60	6 170	1.5	22	**2KJ3302 - ■ DF23 - ■ ■ V1**	
	40	178	36.00	6 230	1.4	22	**2KJ3302 - ■ DF23 - ■ ■ U1**	
	46	157	31.82	6 310	1.8	22	**2KJ3302 - ■ DF23 - ■ ■ T1**	
	50	143	28.93	6 310	1.9	22	**2KJ3302 - ■ DF23 - ■ ■ S1**	
	57	125	25.34	6 130	2.1	22	**2KJ3302 - ■ DF23 - ■ ■ R1**	
	62	116	23.39	6 010	2.3	22	**2KJ3302 - ■ DF23 - ■ ■ Q1**	
	70	102	20.71	5 840	2.4	22	**2KJ3302 - ■ DF23 - ■ ■ P1**	
	84	85	17.24	5 580	2.8	22	**2KJ3302 - ■ DF23 - ■ ■ N1**	
	89	80	16.22	5 490	2.9	22	**2KJ3302 - ■ DF23 - ■ ■ M1**	
	100	72	14.54	5 330	3.1	22	**2KJ3302 - ■ DF23 - ■ ■ L1**	
	117	61	12.38	5 100	3.4	22	**2KJ3302 - ■ DF23 - ■ ■ K1**	
	137	52	10.61	4 890	3.8	22	**2KJ3302 - ■ DF23 - ■ ■ J1**	
	179	40	8.10	4 490	4.2	22	**2KJ3302 - ■ DF23 - ■ ■ G1**	
	FZ.29-LE80ZMQ4P							
	43	168	34.04	4 770	0.89	16	**2KJ3301 - ■ DF23 - ■ ■ W1**	
	47	153	30.95	4 700	0.98	16	**2KJ3301 - ■ DF23 - ■ ■ V1**	
	53	134	27.13	4 600	1.1	16	**2KJ3301 - ■ DF23 - ■ ■ U1**	
	60	120	24.22	4 510	1.3	16	**2KJ3301 - ■ DF23 - ■ ■ T1**	
	67	107	21.58	4 410	1.4	16	**2KJ3301 - ■ DF23 - ■ ■ S1**	
	73	98	19.92	4 340	1.5	16	**2KJ3301 - ■ DF23 - ■ ■ R1**	
	83	86	17.44	4 220	1.7	16	**2KJ3301 - ■ DF23 - ■ ■ Q1**	
	95	76	15.29	4 090	2.0	16	**2KJ3301 - ■ DF23 - ■ ■ P1**	
	104	69	13.88	4 000	2.2	16	**2KJ3301 - ■ DF23 - ■ ■ N1**	
	111	64	13.06	3 950	2.3	16	**2KJ3301 - ■ DF23 - ■ ■ M1**	
	126	57	11.51	3 820	2.5	16	**2KJ3301 - ■ DF23 - ■ ■ L1**	
	145	49	9.99	3 690	2.8	16	**2KJ3301 - ■ DF23 - ■ ■ K1**	
	150	48	9.69	3 590	3.0	16	**2KJ3301 - ■ DF23 - ■ ■ J1**	
	168	43	8.63	3 490	3.0	16	**2KJ3301 - ■ DF23 - ■ ■ H1**	
	182	39	7.97	3 420	3.0	16	**2KJ3301 - ■ DF23 - ■ ■ G1**	
	208	34	6.98	3 300	3.6	16	**2KJ3301 - ■ DF23 - ■ ■ F1**	
	237	30	6.12	3 190	3.8	16	**2KJ3301 - ■ DF23 - ■ ■ E1**	
	261	27	5.55	3 110	3.9	16	**2KJ3301 - ■ DF23 - ■ ■ D1**	
	278	26	5.22	3 050	4.1	16	**2KJ3301 - ■ DF23 - ■ ■ C1**	
	315	23	4.60	2 940	4.3	16	**2KJ3301 - ■ DF23 - ■ ■ B1**	
	362	20	4.00	2 820	4.6	16	**2KJ3301 - ■ DF23 - ■ ■ A1**	
	FZ.29-LE80ME2P							
	161	44	17.44	3 590	3.4	15	**2KJ3301 - ■ DB23 - ■ ■ Q1**	**P00**
	183	39	15.29	3 460	3.8	15	**2KJ3301 - ■ DB23 - ■ ■ P1**	**P00**
	202	35	13.88	3 380	4.2	15	**2KJ3301 - ■ DB23 - ■ ■ N1**	**P00**
	215	33	13.06	3 320	4.5	15	**2KJ3301 - ■ DB23 - ■ ■ M1**	**P00**
1.1	**FD.129-LE90ZLR6P**							
	2.3	4 640	413.00	37 400	1.0	174	**2KJ3408 - ■ EM23 - ■ ■ T1**	**P01**
	2.5	4 280	381.00	37 500	1.1	174	**2KJ3408 - ■ EM23 - ■ ■ S1**	**P01**
	2.7	3 940	351.00	37 500	1.2	174	**2KJ3408 - ■ EM23 - ■ ■ R1**	**P01**
	3.1	3 360	299.31	37 500	1.4	174	**2KJ3408 - ■ EM23 - ■ ■ Q1**	**P01**
	3.3	3 160	281.70	37 500	1.5	174	**2KJ3408 - ■ EM23 - ■ ■ P1**	**P01**

Article No. supplement		
Shaft design	**1, 5 or 9**	➞ page 10/44
Frequency and voltage	**2 or 9**	➞ page 11/2
Gearbox mounting type	**A, D, F or H**	➞ page 10/37

© Siemens AG 2017

4

Selection and ordering data (continued)

P_{rated} kW	n_2 rpm	T_2 Nm	i -	F_{R2} N	f_B -	m kg	Article No. (Article No. supplement ➞ below)	Order code No. of poles
1.1	**FD.129-LE90SM4P**							
	3.5	3 040	413.00	37 500	1.6	171	**2KJ3408 - ■ EK23 - ■ ■ T1**	
	3.7	2 800	381.00	37 500	1.7	171	**2KJ3408 - ■ EK23 - ■ ■ S1**	
	4.1	2 580	351.00	37 500	1.9	171	**2KJ3408 - ■ EK23 - ■ ■ R1**	
	FD.109-LE90ZLR6P							
	2.8	3 770	335.70	25 000	0.82	121	**2KJ3407 - ■ EM23 - ■ ■ R1**	**P01**
	3.0	3 480	309.87	25 000	0.89	121	**2KJ3407 - ■ EM23 - ■ ■ Q1**	**P01**
	3.3	3 160	281.68	25 000	0.98	121	**2KJ3407 - ■ EM23 - ■ ■ P1**	**P01**
	FD.109-LE90SM4P							
	3.5	3 020	410.00	25 000	1.0	118	**2KJ3407 - ■ EK23 - ■ ■ T1**	
	3.9	2 720	370.00	25 000	1.1	118	**2KJ3407 - ■ EK23 - ■ ■ S1**	
	4.2	2 470	335.70	25 000	1.3	118	**2KJ3407 - ■ EK23 - ■ ■ R1**	
	4.6	2 280	309.87	25 000	1.4	118	**2KJ3407 - ■ EK23 - ■ ■ Q1**	
	5.1	2 070	281.68	25 000	1.5	118	**2KJ3407 - ■ EK23 - ■ ■ P1**	
	6.0	1 750	238.52	25 000	1.8	118	**2KJ3407 - ■ EK23 - ■ ■ N1**	
	6.3	1 650	224.49	25 000	1.9	118	**2KJ3407 - ■ EK23 - ■ ■ M1**	
	6.9	1 520	207.31	25 000	2.00	118	**2KJ3407 - ■ EK23 - ■ ■ L1**	
	FD.89-LE90SM4P							
	4.7	2 240	304.82	17 400	0.82	78	**2KJ3406 - ■ EK23 - ■ ■ R1**	
	5.2	2 010	273.41	17 400	0.92	78	**2KJ3406 - ■ EK23 - ■ ■ Q1**	
	5.8	1 810	245.82	17 400	1.0	78	**2KJ3406 - ■ EK23 - ■ ■ P1**	
	6.4	1 630	222.33	17 400	1.1	78	**2KJ3406 - ■ EK23 - ■ ■ N1**	
	6.9	1 510	205.23	17 400	1.2	78	**2KJ3406 - ■ EK23 - ■ ■ M1**	
	7.6	1 380	188.00	17 400	1.3	78	**2KJ3406 - ■ EK23 - ■ ■ L1**	
	9.0	1 160	157.74	17 400	1.6	78	**2KJ3406 - ■ EK23 - ■ ■ K1**	
	9.6	1 090	148.46	17 400	1.7	78	**2KJ3406 - ■ EK23 - ■ ■ J1**	
	10	1 000	136.21	17 400	1.8	78	**2KJ3406 - ■ EK23 - ■ ■ H1**	
	12	875	118.98	17 400	2.1	78	**2KJ3406 - ■ EK23 - ■ ■ G1**	
	FD.79-LE90SM4P							
	8.5	1 230	167.07	13 100	0.81	46	**2KJ3405 - ■ EK23 - ■ ■ K1**	
	9.3	1 120	152.51	13 300	0.89	46	**2KJ3405 - ■ EK23 - ■ ■ J1**	
	11	930	126.54	13 700	1.1	46	**2KJ3405 - ■ EK23 - ■ ■ H1**	
	12	875	119.10	13 800	1.1	46	**2KJ3405 - ■ EK23 - ■ ■ G1**	
	13	825	112.48	13 900	1.2	46	**2KJ3405 - ■ EK23 - ■ ■ F1**	
	15	705	95.71	14 200	1.4	46	**2KJ3405 - ■ EK23 - ■ ■ E1**	
	17	600	81.99	14 400	1.7	46	**2KJ3405 - ■ EK23 - ■ ■ D1**	
	20	530	72.09	14 500	1.9	46	**2KJ3405 - ■ EK23 - ■ ■ C1**	
	23	445	60.82	14 500	2.2	46	**2KJ3405 - ■ EK23 - ■ ■ B1**	
	FZ.79-LE90SM4P							
	27	395	53.55	14 500	2.5	45	**2KJ3305 - ■ EK23 - ■ ■ X1**	
	FD.69-LE90SM4P							
	15	675	92.08	10 600	0.88	37	**2KJ3404 - ■ EK23 - ■ ■ F1**	
	16	635	86.67	10 700	0.94	37	**2KJ3404 - ■ EK23 - ■ ■ E1**	
	18	570	77.65	10 700	1.0	37	**2KJ3404 - ■ EK23 - ■ ■ D1**	
	22	485	66.11	10 500	1.2	37	**2KJ3404 - ■ EK23 - ■ ■ C1**	
	25	415	56.67	10 200	1.4	37	**2KJ3404 - ■ EK23 - ■ ■ B1**	
	29	360	48.80	9 990	1.7	37	**2KJ3404 - ■ EK23 - ■ ■ A1**	
	FZ.69-LE90SM4P							
	22	475	64.67	10 400	1.3	37	**2KJ3304 - ■ EK23 - ■ ■ X1**	
	24	430	58.79	10 300	1.4	37	**2KJ3304 - ■ EK23 - ■ ■ W1**	

Article No. supplement		
Shaft design	**1, 5 or 9**	➞ page 10/44
Frequency and voltage	**2 or 9**	➞ page 11/2
Gearbox mounting type	**A, D, F or H**	➞ page 10/37

© Siemens AG 2017

Selection and ordering data (continued)

P_{rated}	n_2	T_2	i	F_{R2}	f_B	m	Article No.	Order code
kW	rpm	Nm	-	N	-	kg	(Article No. supplement ➞ below)	No. of poles
1.1	**FZ.69-LE90SM4P**							
	28	365	50.00	10 000	1.6	37	**2KJ3304 - ■ EK23 - ■ ■ V1**	
	31	335	45.45	9 860	1.8	37	**2KJ3304 - ■ EK23 - ■ ■ U1**	
	35	295	40.56	9 660	2.0	37	**2KJ3304 - ■ EK23 - ■ ■ T1**	
	39	265	36.36	9 440	2.2	37	**2KJ3304 - ■ EK23 - ■ ■ S1**	
	43	240	32.78	9 220	2.5	37	**2KJ3304 - ■ EK23 - ■ ■ R1**	
	47	220	30.26	9 060	2.7	37	**2KJ3304 - ■ EK23 - ■ ■ Q1**	
	52	200	27.62	8 870	2.9	37	**2KJ3304 - ■ EK23 - ■ ■ P1**	
	FD.49-LE90SM4P							
	19	540	73.77	7 310	0.88	32	**2KJ3403 - ■ EK23 - ■ ■ D1**	
	23	460	62.81	7 270	1.0	32	**2KJ3403 - ■ EK23 - ■ ■ C1**	
	26	395	53.83	7 180	1.2	32	**2KJ3403 - ■ EK23 - ■ ■ B1**	
	31	340	46.36	7 060	1.4	32	**2KJ3403 - ■ EK23 - ■ ■ A1**	
	FZ.49-LE90SM4P							
	23	450	61.43	7 260	1.1	32	**2KJ3303 - ■ EK23 - ■ ■ X1**	
	26	410	55.85	7 200	1.2	32	**2KJ3303 - ■ EK23 - ■ ■ W1**	
	30	350	47.50	7 070	1.4	32	**2KJ3303 - ■ EK23 - ■ ■ V1**	
	33	315	43.18	7 010	1.5	32	**2KJ3303 - ■ EK23 - ■ ■ U1**	
	37	280	38.53	6 900	1.7	32	**2KJ3303 - ■ EK23 - ■ ■ T1**	
	41	255	34.55	6 750	1.9	32	**2KJ3303 - ■ EK23 - ■ ■ S1**	
	46	230	31.14	6 630	2.1	32	**2KJ3303 - ■ EK23 - ■ ■ R1**	
	50	210	28.74	6 550	2.3	32	**2KJ3303 - ■ EK23 - ■ ■ Q1**	
	54	193	26.24	6 420	2.5	32	**2KJ3303 - ■ EK23 - ■ ■ P1**	
	65	160	21.77	6 170	3.0	32	**2KJ3303 - ■ EK23 - ■ ■ N1**	
	FD.39-LE90SM4P							
	30	355	48.29	5 570	0.81	25	**2KJ3402 - ■ EK23 - ■ ■ A1**	
	FZ.39-LE90SM4P							
	36	290	39.60	5 820	0.99	24	**2KJ3302 - ■ EK23 - ■ ■ V1**	
	40	265	36.00	5 910	0.96	24	**2KJ3302 - ■ EK23 - ■ ■ U1**	
	45	235	31.82	5 910	1.2	24	**2KJ3302 - ■ EK23 - ■ ■ T1**	
	49	210	28.93	5 860	1.3	24	**2KJ3302 - ■ EK23 - ■ ■ S1**	
	56	187	25.34	5 710	1.4	24	**2KJ3302 - ■ EK23 - ■ ■ R1**	
	61	172	23.39	5 630	1.5	24	**2KJ3302 - ■ EK23 - ■ ■ Q1**	
	69	153	20.71	5 500	1.6	24	**2KJ3302 - ■ EK23 - ■ ■ P1**	
	83	127	17.24	5 300	1.8	24	**2KJ3302 - ■ EK23 - ■ ■ N1**	
	88	120	16.22	5 230	1.9	24	**2KJ3302 - ■ EK23 - ■ ■ M1**	
	98	107	14.54	5 100	2.1	24	**2KJ3302 - ■ EK23 - ■ ■ L1**	
	115	91	12.38	4 910	2.3	24	**2KJ3302 - ■ EK23 - ■ ■ K1**	
	134	78	10.61	4 730	2.5	24	**2KJ3302 - ■ EK23 - ■ ■ J1**	
	156	67	9.13	4 550	2.8	24	**2KJ3302 - ■ EK23 - ■ ■ H1**	
	176	60	8.10	4 350	2.8	24	**2KJ3302 - ■ EK23 - ■ ■ G1**	
	211	50	6.74	4 150	3.1	24	**2KJ3302 - ■ EK23 - ■ ■ F1**	
	224	47	6.35	4 080	3.2	24	**2KJ3302 - ■ EK23 - ■ ■ E1**	
	250	42	5.69	3 960	3.3	24	**2KJ3302 - ■ EK23 - ■ ■ D1**	
	294	36	4.84	3 790	3.6	24	**2KJ3302 - ■ EK23 - ■ ■ C1**	
	343	31	4.15	3 630	3.9	24	**2KJ3302 - ■ EK23 - ■ ■ B1**	
	399	26	3.57	3 480	4.1	24	**2KJ3302 - ■ EK23 - ■ ■ A1**	
	FZ.39-LE80ZMJ2P							
	164	64	17.24	4 490	3.7	22	**2KJ3302 - ■ DM23 - ■ ■ N1**	**P00**
	175	60	16.22	4 420	3.8	22	**2KJ3302 - ■ DM23 - ■ ■ M1**	**P00**

Article No. supplement		
Shaft design	**1, 5 or 9**	➞ page 10/44
Frequency and voltage	**2 or 9**	➞ page 11/2
Gearbox mounting type	**A, D, F or H**	➞ page 10/37

© Siemens AG 2017

4

Selection and ordering data (continued)

P_{rated} kW	n_2 rpm	T_2 Nm	i -	F_{R2} N	f_B -	m kg	Article No. (Article No. supplement ➞ below)	Order code No. of poles
1.1	**FZ.39-LE80ZMJ2P**							
	195	54	14.54	4 290	4.1	22	**2KJ3302 - ■ DM23 - ■ ■ L1**	**P00**
	229	46	12.38	4 100	4.6	22	**2KJ3302 - ■ DM23 - ■ ■ K1**	**P00**
	FZ.29-LE90SM4P							
	59	179	24.22	4 050	0.84	18	**2KJ3301 - ■ EK23 - ■ ■ T1**	
	66	159	21.58	4 010	0.94	18	**2KJ3301 - ■ EK23 - ■ ■ S1**	
	72	147	19.92	3 970	1.0	18	**2KJ3301 - ■ EK23 - ■ ■ R1**	
	82	129	17.44	3 890	1.2	18	**2KJ3301 - ■ EK23 - ■ ■ Q1**	
	93	113	15.29	3 810	1.3	18	**2KJ3301 - ■ EK23 - ■ ■ P1**	
	103	102	13.88	3 750	1.5	18	**2KJ3301 - ■ EK23 - ■ ■ N1**	
	109	96	13.06	3 710	1.6	18	**2KJ3301 - ■ EK23 - ■ ■ M1**	
	124	85	11.51	3 610	1.7	18	**2KJ3301 - ■ EK23 - ■ ■ L1**	
	143	74	9.99	3 510	1.8	18	**2KJ3301 - ■ EK23 - ■ ■ K1**	
	147	71	9.69	3 390	2.0	18	**2KJ3301 - ■ EK23 - ■ ■ J1**	
	165	64	8.63	3 300	2.0	18	**2KJ3301 - ■ EK23 - ■ ■ H1**	
	179	59	7.97	3 250	2.0	18	**2KJ3301 - ■ EK23 - ■ ■ G1**	
	204	52	6.98	3 150	2.4	18	**2KJ3301 - ■ EK23 - ■ ■ F1**	
	233	45	6.12	3 060	2.5	18	**2KJ3301 - ■ EK23 - ■ ■ E1**	
	257	41	5.55	2 990	2.6	18	**2KJ3301 - ■ EK23 - ■ ■ D1**	
	273	38	5.22	2 950	2.8	18	**2KJ3301 - ■ EK23 - ■ ■ C1**	
	310	34	4.60	2 850	2.9	18	**2KJ3301 - ■ EK23 - ■ ■ B1**	
	356	30	4.00	2 740	3.1	18	**2KJ3301 - ■ EK23 - ■ ■ A1**	
	FZ.29-LE80ZMJ2P							
	163	65	17.44	3 400	2.3	16	**2KJ3301 - ■ DM23 - ■ ■ Q1**	**P00**
	185	57	15.29	3 300	2.6	16	**2KJ3301 - ■ DM23 - ■ ■ P1**	**P00**
	204	51	13.88	3 230	2.9	16	**2KJ3301 - ■ DM23 - ■ ■ N1**	**P00**
	217	48	13.06	3 180	3.1	16	**2KJ3301 - ■ DM23 - ■ ■ M1**	**P00**
	246	43	11.51	3 080	3.4	16	**2KJ3301 - ■ DM23 - ■ ■ L1**	**P00**
	284	37	9.99	2 970	3.7	16	**2KJ3301 - ■ DM23 - ■ ■ K1**	**P00**
	293	36	9.69	2 890	4.0	16	**2KJ3301 - ■ DM23 - ■ ■ J1**	**P00**
	329	32	8.63	2 810	4.1	16	**2KJ3301 - ■ DM23 - ■ ■ H1**	**P00**
	356	30	7.97	2 750	4.1	16	**2KJ3301 - ■ DM23 - ■ ■ G1**	**P00**
	406	26	6.98	2 650	4.8	16	**2KJ3301 - ■ DM23 - ■ ■ F1**	**P00**
	463	23	6.12	2 560	5.0	16	**2KJ3301 - ■ DM23 - ■ ■ E1**	**P00**
	511	21	5.55	2 490	5.3	16	**2KJ3301 - ■ DM23 - ■ ■ D1**	**P00**
	543	19	5.22	2 450	5.5	16	**2KJ3301 - ■ DM23 - ■ ■ C1**	**P00**
	616	17	4.60	2 360	5.7	16	**2KJ3301 - ■ DM23 - ■ ■ B1**	**P00**
	709	15	4.00	2 270	6.1	16	**2KJ3301 - ■ DM23 - ■ ■ A1**	**P00**
1.5	**FD.149-LE100LLB6P**							
	2.6	5 560	377.00	65 000	1.4	275	**2KJ3410 - ■ FM23 - ■ ■ W1**	**P01**
	3.0	4 770	323.04	65 000	1.7	275	**2KJ3410 - ■ FM23 - ■ ■ V1**	**P01**
	3.2	4 490	304.03	65 000	1.8	275	**2KJ3410 - ■ FM23 - ■ ■ U1**	**P01**
	3.4	4 200	285.00	65 000	1.9	275	**2KJ3410 - ■ FM23 - ■ ■ T1**	**P01**
	FD.129-LE100LLB6P							
	2.3	6 090	413.00	35 900	0.80	188	**2KJ3408 - ■ FM23 - ■ ■ T1**	**P01**
	2.5	5 620	381.00	36 400	0.86	188	**2KJ3408 - ■ FM23 - ■ ■ S1**	**P01**
	2.8	5 180	351.00	36 800	0.94	188	**2KJ3408 - ■ FM23 - ■ ■ R1**	**P01**
	3.2	4 420	299.31	37 500	1.1	188	**2KJ3408 - ■ FM23 - ■ ■ Q1**	**P01**
	FD.129-LE90ZLR4P							
	3.5	4 090	413.00	37 500	1.2	174	**2KJ3408 - ■ EM23 - ■ ■ T1**	

Article No. supplement		
Shaft design	**1, 5 or 9**	➞ page 10/44
Frequency and voltage	**2 or 9**	➞ page 11/2
Gearbox mounting type	**A, D, F or H**	➞ page 10/37

© Siemens AG 2017

Selection and ordering data (continued)

P_{rated}	n_2	T_2	i	F_{R2}	f_B	m	Article No.	Order code
kW	rpm	Nm	-	N	-	kg	(Article No. supplement ➞ below)	No. of poles
1.5	**FD.129-LE90ZLR4P**							
	3.8	3 770	381.00	37 500	1.3	174	**2KJ3408 - ■ EM23 - ■ ■ S1**	
	4.1	3 480	351.00	37 500	1.4	174	**2KJ3408 - ■ EM23 - ■ ■ R1**	
	4.8	2 960	299.31	37 500	1.6	174	**2KJ3408 - ■ EM23 - ■ ■ Q1**	
	5.1	2 790	281.70	37 500	1.7	174	**2KJ3408 - ■ EM23 - ■ ■ P1**	
	5.5	2 590	261.42	37 500	1.9	174	**2KJ3408 - ■ EM23 - ■ ■ N1**	
	6.3	2 290	231.12	37 500	2.1	174	**2KJ3408 - ■ EM23 - ■ ■ M1**	
	FD.109-LE90ZLR4P							
	3.9	3 660	370.00	25 000	0.85	121	**2KJ3407 - ■ EM23 - ■ ■ S1**	
	4.3	3 320	335.70	25 000	0.93	121	**2KJ3407 - ■ EM23 - ■ ■ R1**	
	4.7	3 070	309.87	25 000	1.0	121	**2KJ3407 - ■ EM23 - ■ ■ Q1**	
	5.1	2 790	281.68	25 000	1.1	121	**2KJ3407 - ■ EM23 - ■ ■ P1**	
	6.1	2 360	238.52	25 000	1.3	121	**2KJ3407 - ■ EM23 - ■ ■ N1**	
	6.4	2 220	224.49	25 000	1.4	121	**2KJ3407 - ■ EM23 - ■ ■ M1**	
	7.0	2 050	207.31	25 000	1.5	121	**2KJ3407 - ■ EM23 - ■ ■ L1**	
	7.8	1 820	184.46	25 000	1.7	121	**2KJ3407 - ■ EM23 - ■ ■ K1**	
	8.8	1 620	163.83	25 000	1.9	121	**2KJ3407 - ■ EM23 - ■ ■ J1**	
	9.9	1 450	146.65	25 000	2.1	121	**2KJ3407 - ■ EM23 - ■ ■ H1**	
	FD.89-LE90ZLR4P							
	6.5	2 200	222.33	17 400	0.84	81	**2KJ3406 - ■ EM23 - ■ ■ N1**	
	7.0	2 030	205.23	17 400	0.91	81	**2KJ3406 - ■ EM23 - ■ ■ M1**	
	7.7	1 860	188.00	17 400	0.99	81	**2KJ3406 - ■ EM23 - ■ ■ L1**	
	9.2	1 560	157.74	17 400	1.2	81	**2KJ3406 - ■ EM23 - ■ ■ K1**	
	9.7	1 470	148.46	17 400	1.3	81	**2KJ3406 - ■ EM23 - ■ ■ J1**	
	11	1 350	136.21	17 400	1.4	81	**2KJ3406 - ■ EM23 - ■ ■ H1**	
	12	1 180	118.98	17 400	1.6	81	**2KJ3406 - ■ EM23 - ■ ■ G1**	
	14	1 050	106.52	17 400	1.8	81	**2KJ3406 - ■ EM23 - ■ ■ F1**	
	16	920	93.14	17 400	2.0	81	**2KJ3406 - ■ EM23 - ■ ■ E1**	
	18	790	79.95	17 400	2.3	81	**2KJ3406 - ■ EM23 - ■ ■ D1**	
	FD.79-LE90ZLR4P							
	11	1 250	126.54	13 100	0.80	49	**2KJ3405 - ■ EM23 - ■ ■ H1**	
	12	1 180	119.10	13 200	0.85	49	**2KJ3405 - ■ EM23 - ■ ■ G1**	
	13	1 110	112.48	13 400	0.90	49	**2KJ3405 - ■ EM23 - ■ ■ F1**	
	15	945	95.71	13 700	1.1	49	**2KJ3405 - ■ EM23 - ■ ■ E1**	
	18	810	81.99	13 900	1.2	49	**2KJ3405 - ■ EM23 - ■ ■ D1**	
	20	715	72.09	14 100	1.4	49	**2KJ3405 - ■ EM23 - ■ ■ C1**	
	24	600	60.82	14 400	1.7	49	**2KJ3405 - ■ EM23 - ■ ■ B1**	
	27	525	53.01	14 500	1.9	49	**2KJ3405 - ■ EM23 - ■ ■ A1**	
	FZ.79-LE90ZLR4P							
	27	530	53.55	14 500	1.9	48	**2KJ3305 - ■ EM23 - ■ ■ X1**	
	30	475	48.03	14 500	2.1	48	**2KJ3305 - ■ EM23 - ■ ■ W1**	
	33	425	43.18	14 500	2.3	48	**2KJ3305 - ■ EM23 - ■ ■ V1**	
	37	385	39.06	14 500	2.6	48	**2KJ3305 - ■ EM23 - ■ ■ U1**	
	FD.69-LE90ZLR4P							
	22	655	66.11	9 410	0.92	40	**2KJ3404 - ■ EM23 - ■ ■ C1**	
	25	560	56.67	9 320	1.1	40	**2KJ3404 - ■ EM23 - ■ ■ B1**	
	30	480	48.80	9 200	1.2	40	**2KJ3404 - ■ EM23 - ■ ■ A1**	
	FZ.69-LE90ZLR4P							
	22	640	64.67	9 410	0.94	40	**2KJ3304 - ■ EM23 - ■ ■ X1**	
	25	580	58.79	9 360	1.0	40	**2KJ3304 - ■ EM23 - ■ ■ W1**	

Article No. supplement		
Shaft design	**1, 5 or 9**	➞ page 10/44
Frequency and voltage	**2 or 9**	➞ page 11/2
Gearbox mounting type	**A, D, F or H**	➞ page 10/37

© Siemens AG 2017

4

Selection and ordering data (continued)

P_{rated} kW	n_2 rpm	T_2 Nm	i -	F_{R2} N	f_B -	m kg	Article No. (Article No. supplement ➞ below)	Order code No. of poles
1.5	**FZ.69-LE90ZLR4P**							
	29	495	50.00	9 200	1.2	40	**2KJ3304 - ■ EM23 - ■ ■ V1**	
	32	450	45.45	9 100	1.3	40	**2KJ3304 - ■ EM23 - ■ ■ U1**	
	36	400	40.56	8 960	1.5	40	**2KJ3304 - ■ EM23 - ■ ■ T1**	
	40	360	36.36	8 800	1.7	40	**2KJ3304 - ■ EM23 - ■ ■ S1**	
	44	325	32.78	8 640	1.8	40	**2KJ3304 - ■ EM23 - ■ ■ R1**	
	48	300	30.26	8 520	2.0	40	**2KJ3304 - ■ EM23 - ■ ■ Q1**	
	52	270	27.62	8 390	2.2	40	**2KJ3304 - ■ EM23 - ■ ■ P1**	
	63	225	22.92	8 060	2.6	40	**2KJ3304 - ■ EM23 - ■ ■ N1**	
	67	210	21.57	7 970	2.8	40	**2KJ3304 - ■ EM23 - ■ ■ M1**	
	71	200	20.37	7 850	3.0	40	**2KJ3304 - ■ EM23 - ■ ■ L1**	
	FD.49-LE90ZLR4P							
	27	530	53.83	6 250	0.90	35	**2KJ3403 - ■ EM23 - ■ ■ B1**	
	31	460	46.36	6 240	1.0	35	**2KJ3403 - ■ EM23 - ■ ■ A1**	
	FZ.49-LE90ZLR4P							
	26	550	55.85	6 240	0.87	35	**2KJ3303 - ■ EM23 - ■ ■ W1**	
	30	470	47.50	6 250	1.0	35	**2KJ3303 - ■ EM23 - ■ ■ V1**	
	33	425	43.18	6 250	1.1	35	**2KJ3303 - ■ EM23 - ■ ■ U1**	
	38	380	38.53	6 210	1.3	35	**2KJ3303 - ■ EM23 - ■ ■ T1**	
	42	340	34.55	6 160	1.4	35	**2KJ3303 - ■ EM23 - ■ ■ S1**	
	46	305	31.14	6 100	1.6	35	**2KJ3303 - ■ EM23 - ■ ■ R1**	
	50	285	28.74	6 020	1.7	35	**2KJ3303 - ■ EM23 - ■ ■ Q1**	
	55	260	26.24	5 950	1.8	35	**2KJ3303 - ■ EM23 - ■ ■ P1**	
	66	215	21.77	5 780	2.2	35	**2KJ3303 - ■ EM23 - ■ ■ N1**	
	71	200	20.49	5 730	2.4	35	**2KJ3303 - ■ EM23 - ■ ■ M1**	
	75	192	19.35	5 650	2.5	35	**2KJ3303 - ■ EM23 - ■ ■ L1**	
	88	163	16.47	5 480	2.9	35	**2KJ3303 - ■ EM23 - ■ ■ K1**	
	102	140	14.11	5 300	3.4	35	**2KJ3303 - ■ EM23 - ■ ■ J1**	
	FZ.39-LE90ZLR4P							
	45	315	31.82	5 280	0.90	27	**2KJ3302 - ■ EM23 - ■ ■ T1**	
	50	285	28.93	5 260	0.96	27	**2KJ3302 - ■ EM23 - ■ ■ S1**	
	57	250	25.34	5 200	1.1	27	**2KJ3302 - ■ EM23 - ■ ■ R1**	
	62	230	23.39	5 170	1.1	27	**2KJ3302 - ■ EM23 - ■ ■ Q1**	
	70	205	20.71	5 080	1.2	27	**2KJ3302 - ■ EM23 - ■ ■ P1**	
	84	171	17.24	4 940	1.4	27	**2KJ3302 - ■ EM23 - ■ ■ N1**	
	89	161	16.22	4 890	1.4	27	**2KJ3302 - ■ EM23 - ■ ■ M1**	
	99	144	14.54	4 800	1.5	27	**2KJ3302 - ■ EM23 - ■ ■ L1**	
	117	123	12.38	4 650	1.7	27	**2KJ3302 - ■ EM23 - ■ ■ K1**	
	136	105	10.61	4 500	1.9	27	**2KJ3302 - ■ EM23 - ■ ■ J1**	
	158	90	9.13	4 360	2.1	27	**2KJ3302 - ■ EM23 - ■ ■ H1**	
	178	80	8.10	4 160	2.1	27	**2KJ3302 - ■ EM23 - ■ ■ G1**	
	214	67	6.74	3 990	2.3	27	**2KJ3302 - ■ EM23 - ■ ■ F1**	
	228	63	6.35	3 930	2.4	27	**2KJ3302 - ■ EM23 - ■ ■ E1**	
	254	56	5.69	3 830	2.5	27	**2KJ3302 - ■ EM23 - ■ ■ D1**	
	299	48	4.84	3 670	2.7	27	**2KJ3302 - ■ EM23 - ■ ■ C1**	
	348	41	4.15	3 520	2.9	27	**2KJ3302 - ■ EM23 - ■ ■ B1**	
	405	35	3.57	3 390	3.1	27	**2KJ3302 - ■ EM23 - ■ ■ A1**	
	FZ.39-LE90SM2P							
	167	86	17.24	4 290	2.7	24	**2KJ3302 - ■ EK23 - ■ ■ N1**	**P00**
	178	80	16.22	4 240	2.9	24	**2KJ3302 - ■ EK23 - ■ ■ M1**	**P00**

Article No. supplement		
Shaft design	**1, 5 or 9**	➞ page 10/44
Frequency and voltage	**2 or 9**	➞ page 11/2
Gearbox mounting type	**A, D, F or H**	➞ page 10/37

© Siemens AG 2017

Selection and ordering data (continued)

P_{rated} kW	n_2 rpm	T_2 Nm	i -	F_{R2} N	f_B -	m kg	Article No. (Article No. supplement ➞ below)	Order code No. of poles
1.5	**FZ.39-LE90SM2P**							
	198	72	14.54	4 130	3.0	24	**2KJ3302 - ■ EK23 - ■ ■ L1**	**P00**
	233	62	12.38	3 960	3.4	24	**2KJ3302 - ■ EK23 - ■ ■ K1**	**P00**
	272	53	10.61	3 800	3.8	24	**2KJ3302 - ■ EK23 - ■ ■ J1**	**P00**
	316	45	9.13	3 660	4.2	24	**2KJ3302 - ■ EK23 - ■ ■ H1**	**P00**
	356	40	8.10	3 500	4.2	24	**2KJ3302 - ■ EK23 - ■ ■ G1**	**P00**
	428	34	6.74	3 330	4.5	24	**2KJ3302 - ■ EK23 - ■ ■ F1**	**P00**
	454	32	6.35	3 270	4.7	24	**2KJ3302 - ■ EK23 - ■ ■ E1**	**P00**
	507	28	5.69	3 180	5.0	24	**2KJ3302 - ■ EK23 - ■ ■ D1**	**P00**
	596	24	4.84	3 030	5.3	24	**2KJ3302 - ■ EK23 - ■ ■ C1**	**P00**
	695	21	4.15	2 890	5.7	24	**2KJ3302 - ■ EK23 - ■ ■ B1**	**P00**
	808	18	3.57	2 770	6.1	24	**2KJ3302 - ■ EK23 - ■ ■ A1**	**P00**
	FZ.29-LE90ZLR4P							
	83	173	17.44	3 500	0.87	21	**2KJ3301 - ■ EM23 - ■ ■ Q1**	
	95	152	15.29	3 460	0.99	21	**2KJ3301 - ■ EM23 - ■ ■ P1**	
	104	138	13.88	3 430	1.1	21	**2KJ3301 - ■ EM23 - ■ ■ N1**	
	111	129	13.06	3 410	1.2	21	**2KJ3301 - ■ EM23 - ■ ■ M1**	
	126	114	11.51	3 350	1.3	21	**2KJ3301 - ■ EM23 - ■ ■ L1**	
	145	99	9.99	3 280	1.4	21	**2KJ3301 - ■ EM23 - ■ ■ K1**	
	149	96	9.69	3 130	1.5	21	**2KJ3301 - ■ EM23 - ■ ■ J1**	
	167	86	8.63	3 070	1.5	21	**2KJ3301 - ■ EM23 - ■ ■ H1**	
	181	79	7.97	3 040	1.5	21	**2KJ3301 - ■ EM23 - ■ ■ G1**	
	207	69	6.98	2 970	1.8	21	**2KJ3301 - ■ EM23 - ■ ■ F1**	
	236	61	6.12	2 890	1.9	21	**2KJ3301 - ■ EM23 - ■ ■ E1**	
	260	55	5.55	2 840	2.0	21	**2KJ3301 - ■ EM23 - ■ ■ D1**	
	277	52	5.22	2 800	2.0	21	**2KJ3301 - ■ EM23 - ■ ■ C1**	
	314	46	4.60	2 720	2.1	21	**2KJ3301 - ■ EM23 - ■ ■ B1**	
	361	40	4.00	2 630	2.3	21	**2KJ3301 - ■ EM23 - ■ ■ A1**	
	FZ.29-LE90SM2P							
	165	87	17.44	3 200	1.7	18	**2KJ3301 - ■ EK23 - ■ ■ Q1**	**P00**
	189	76	15.29	3 120	2.0	18	**2KJ3301 - ■ EK23 - ■ ■ P1**	**P00**
	208	69	13.88	3 060	2.2	18	**2KJ3301 - ■ EK23 - ■ ■ N1**	**P00**
	221	65	13.06	3 020	2.3	18	**2KJ3301 - ■ EK23 - ■ ■ M1**	**P00**
	251	57	11.51	2 940	2.5	18	**2KJ3301 - ■ EK23 - ■ ■ L1**	**P00**
	289	50	9.99	2 840	2.7	18	**2KJ3301 - ■ EK23 - ■ ■ K1**	**P00**
	298	48	9.69	2 760	3.0	18	**2KJ3301 - ■ EK23 - ■ ■ J1**	**P00**
	334	43	8.63	2 680	3.0	18	**2KJ3301 - ■ EK23 - ■ ■ H1**	**P00**
	362	40	7.97	2 630	3.0	18	**2KJ3301 - ■ EK23 - ■ ■ G1**	**P00**
	413	35	6.98	2 550	3.5	18	**2KJ3301 - ■ EK23 - ■ ■ F1**	**P00**
	471	30	6.12	2 470	3.8	18	**2KJ3301 - ■ EK23 - ■ ■ E1**	**P00**
	520	28	5.55	2 400	3.9	18	**2KJ3301 - ■ EK23 - ■ ■ D1**	**P00**
	553	26	5.22	2 370	4.1	18	**2KJ3301 - ■ EK23 - ■ ■ C1**	**P00**
	627	23	4.60	2 290	4.2	18	**2KJ3301 - ■ EK23 - ■ ■ B1**	**P00**
	721	20	4.00	2 200	4.6	18	**2KJ3301 - ■ EK23 - ■ ■ A1**	**P00**
2.2	**FD.169-LE112ZMKB6P**							
	2.6	7 970	368.00	73 500	1.7	426	**2KJ3411 - ■ GJ23 - ■ ■ V1**	**P01**
	2.8	7 430	343.01	73 500	1.8	426	**2KJ3411 - ■ GJ23 - ■ ■ U1**	**P01**
	FD.149-LE112ZMKB6P							
	2.6	8 160	377.00	65 000	0.98	280	**2KJ3410 - ■ GJ23 - ■ ■ W1**	**P01**

Article No. supplement		
Shaft design	**1, 5 or 9**	➞ page 10/44
Frequency and voltage	**2 or 9**	➞ page 11/2
Gearbox mounting type	**A, D, F or H**	➞ page 10/37

© Siemens AG 2017

4

Selection and ordering data (continued)

P_{rated} kW	n_2 rpm	T_2 Nm	i -	F_{R2} N	f_B -	m kg	Article No. (Article No. supplement ➞ below)	Order code No. of poles
2.2	**FD.149-LE112ZMKB6P**							
	3.0	6 990	323.04	65 000	1.1	280	**2KJ3410 - ■ GJ23 - ■ ■ V1**	**P01**
	3.2	6 580	304.03	65 000	1.2	280	**2KJ3410 - ■ GJ23 - ■ ■ U1**	**P01**
	3.4	6 170	285.00	65 000	1.3	280	**2KJ3410 - ■ GJ23 - ■ ■ T1**	**P01**
	FD.149-LE100ZLSA4P							
	3.9	5 400	377.00	65 000	1.5	278	**2KJ3410 - ■ FN23 - ■ ■ W1**	
	4.5	4 630	323.04	65 000	1.7	278	**2KJ3410 - ■ FN23 - ■ ■ V1**	
	4.8	4 360	304.03	65 000	1.8	278	**2KJ3410 - ■ FN23 - ■ ■ U1**	
	5.1	4 080	285.00	65 000	2.0	278	**2KJ3410 - ■ FN23 - ■ ■ T1**	
	FD.129-LE100ZLSA4P							
	3.5	5 920	413.00	36 100	0.82	191	**2KJ3408 - ■ FN23 - ■ ■ T1**	
	3.8	5 460	381.00	36 600	0.89	191	**2KJ3408 - ■ FN23 - ■ ■ S1**	
	4.2	5 030	351.00	37 000	0.96	191	**2KJ3408 - ■ FN23 - ■ ■ R1**	
	4.9	4 290	299.31	37 500	1.1	191	**2KJ3408 - ■ FN23 - ■ ■ Q1**	
	5.2	4 040	281.70	37 500	1.2	191	**2KJ3408 - ■ FN23 - ■ ■ P1**	
	5.6	3 740	261.42	37 500	1.3	191	**2KJ3408 - ■ FN23 - ■ ■ N1**	
	6.3	3 310	231.12	37 500	1.5	191	**2KJ3408 - ■ FN23 - ■ ■ M1**	
	7.1	2 950	206.32	37 500	1.6	191	**2KJ3408 - ■ FN23 - ■ ■ L1**	
	7.9	2 660	185.66	37 500	1.8	191	**2KJ3408 - ■ FN23 - ■ ■ K1**	
	9.1	2 310	161.14	37 500	2.1	191	**2KJ3408 - ■ FN23 - ■ ■ J1**	
	FD.109-LE100ZLSA4P							
	6.1	3 420	238.52	25 000	0.91	137	**2KJ3407 - ■ FN23 - ■ ■ N1**	
	6.5	3 210	224.49	25 000	0.96	137	**2KJ3407 - ■ FN23 - ■ ■ M1**	
	7.1	2 970	207.31	25 000	1.0	137	**2KJ3407 - ■ FN23 - ■ ■ L1**	
	7.9	2 640	184.46	25 000	1.2	137	**2KJ3407 - ■ FN23 - ■ ■ K1**	
	8.9	2 350	163.83	25 000	1.3	137	**2KJ3407 - ■ FN23 - ■ ■ J1**	
	10	2 100	146.65	25 000	1.5	137	**2KJ3407 - ■ FN23 - ■ ■ H1**	
	12	1 790	125.37	25 000	1.7	137	**2KJ3407 - ■ FN23 - ■ ■ G1**	
	13	1 600	111.95	25 000	1.9	137	**2KJ3407 - ■ FN23 - ■ ■ F1**	
	15	1 410	98.94	25 000	2.2	137	**2KJ3407 - ■ FN23 - ■ ■ E1**	
	FD.89-LE100ZLSA4P							
	9.3	2 260	157.74	17 400	0.82	96	**2KJ3406 - ■ FN23 - ■ ■ K1**	
	9.9	2 120	148.46	17 400	0.87	96	**2KJ3406 - ■ FN23 - ■ ■ J1**	
	11	1 950	136.21	17 400	0.95	96	**2KJ3406 - ■ FN23 - ■ ■ H1**	
	12	1 700	118.98	17 400	1.1	96	**2KJ3406 - ■ FN23 - ■ ■ G1**	
	14	1 520	106.52	17 400	1.2	96	**2KJ3406 - ■ FN23 - ■ ■ F1**	
	16	1 330	93.14	17 400	1.4	96	**2KJ3406 - ■ FN23 - ■ ■ E1**	
	18	1 140	79.95	17 400	1.6	96	**2KJ3406 - ■ FN23 - ■ ■ D1**	
	21	1 010	70.67	17 400	1.8	96	**2KJ3406 - ■ FN23 - ■ ■ C1**	
	24	860	60.09	17 400	2.1	96	**2KJ3406 - ■ FN23 - ■ ■ B1**	
	28	735	51.51	17 400	2.5	96	**2KJ3406 - ■ FN23 - ■ ■ A1**	
	FZ.89-LE100ZLSA4P							
	24	885	61.72	17 400	2.1	95	**2KJ3306 - ■ FN23 - ■ ■ B2**	
	26	795	55.72	17 400	2.3	95	**2KJ3306 - ■ FN23 - ■ ■ A2**	
	FD.79-LE100ZLSA4P							
	18	1 170	81.99	13 200	0.85	65	**2KJ3405 - ■ FN23 - ■ ■ D1**	
	20	1 030	72.09	13 500	0.97	65	**2KJ3405 - ■ FN23 - ■ ■ C1**	
	24	870	60.82	13 800	1.1	65	**2KJ3405 - ■ FN23 - ■ ■ B1**	
	28	760	53.01	14 000	1.3	65	**2KJ3405 - ■ FN23 - ■ ■ A1**	

Article No. supplement		
Shaft design	**1, 5 or 9**	➞ page 10/44
Frequency and voltage	**2 or 9**	➞ page 11/2
Gearbox mounting type	**A, D, F or H**	➞ page 10/37

© Siemens AG 2017

Selection and ordering data (continued)

P_{rated}	n_2	T_2	i	F_{R2}	f_B	m	Article No.	Order code
kW	rpm	Nm	-	N	-	kg	(Article No. supplement ➞ below)	No. of poles
2.2	**FZ.79-LE100ZLSA4P**							
	31	685	48.03	14 200	1.5	64	**2KJ3305 - ■ FN23 - ■ ■ W1**	
	34	615	43.18	14 300	1.6	64	**2KJ3305 - ■ FN23 - ■ ■ V1**	
	38	560	39.06	14 400	1.8	64	**2KJ3305 - ■ FN23 - ■ ■ U1**	
	41	515	36.05	14 500	1.9	64	**2KJ3305 - ■ FN23 - ■ ■ T1**	
	44	470	33.02	14 500	2.1	64	**2KJ3305 - ■ FN23 - ■ ■ S1**	
	53	395	27.71	14 500	2.5	64	**2KJ3305 - ■ FN23 - ■ ■ R1**	
	56	370	26.08	14 500	2.7	64	**2KJ3305 - ■ FN23 - ■ ■ Q1**	
	61	340	23.93	14 500	2.9	64	**2KJ3305 - ■ FN23 - ■ ■ P1**	
	FD.69-LE100ZLSA4P							
	30	700	48.80	7 780	0.86	58	**2KJ3404 - ■ FN23 - ■ ■ A1**	
	FZ.69-LE100ZLSA4P							
	36	580	40.56	7 800	1.0	57	**2KJ3304 - ■ FN23 - ■ ■ T1**	
	40	520	36.36	7 760	1.2	57	**2KJ3304 - ■ FN23 - ■ ■ S1**	
	45	470	32.78	7 700	1.3	57	**2KJ3304 - ■ FN23 - ■ ■ R1**	
	48	430	30.26	7 670	1.4	57	**2KJ3304 - ■ FN23 - ■ ■ Q1**	
	53	395	27.62	7 570	1.5	57	**2KJ3304 - ■ FN23 - ■ ■ P1**	
	64	325	22.92	7 400	1.8	57	**2KJ3304 - ■ FN23 - ■ ■ N1**	
	68	305	21.57	7 340	1.9	57	**2KJ3304 - ■ FN23 - ■ ■ M1**	
	72	290	20.37	7 260	2.1	57	**2KJ3304 - ■ FN23 - ■ ■ L1**	
	85	245	17.33	7 060	2.4	57	**2KJ3304 - ■ FN23 - ■ ■ K1**	
	99	210	14.85	6 840	2.8	57	**2KJ3304 - ■ FN23 - ■ ■ J1**	
	112	187	13.06	6 640	3.2	57	**2KJ3304 - ■ FN23 - ■ ■ H1**	
	133	158	11.01	6 390	3.8	57	**2KJ3304 - ■ FN23 - ■ ■ G1**	
	165	128	8.90	6 030	3.7	57	**2KJ3304 - ■ FN23 - ■ ■ E1**	
	192	109	7.62	5 810	4.3	57	**2KJ3304 - ■ FN23 - ■ ■ D1**	
	FZ.49-LE100ZLSA4P							
	38	550	38.53	5 050	0.87	53	**2KJ3303 - ■ FN23 - ■ ■ T1**	
	42	495	34.55	5 110	0.97	53	**2KJ3303 - ■ FN23 - ■ ■ S1**	
	47	445	31.14	5 150	1.1	53	**2KJ3303 - ■ FN23 - ■ ■ R1**	
	51	410	28.74	5 160	1.2	53	**2KJ3303 - ■ FN23 - ■ ■ Q1**	
	56	375	26.24	5 160	1.3	53	**2KJ3303 - ■ FN23 - ■ ■ P1**	
	67	310	21.77	5 120	1.5	53	**2KJ3303 - ■ FN23 - ■ ■ N1**	
	71	290	20.49	5 110	1.6	53	**2KJ3303 - ■ FN23 - ■ ■ M1**	
	76	275	19.35	5 080	1.7	53	**2KJ3303 - ■ FN23 - ■ ■ L1**	
	89	235	16.47	4 980	2.0	53	**2KJ3303 - ■ FN23 - ■ ■ K1**	
	104	200	14.11	4 880	2.4	53	**2KJ3303 - ■ FN23 - ■ ■ J1**	
	118	178	12.40	4 760	2.7	53	**2KJ3303 - ■ FN23 - ■ ■ H1**	
	140	150	10.46	4 620	3.2	53	**2KJ3303 - ■ FN23 - ■ ■ G1**	
	161	131	9.12	4 490	3.7	53	**2KJ3303 - ■ FN23 - ■ ■ F1**	
	174	120	8.40	4 330	3.7	53	**2KJ3303 - ■ FN23 - ■ ■ E1**	
	203	103	7.20	4 190	4.4	53	**2KJ3303 - ■ FN23 - ■ ■ D1**	
	FZ.49-LE90ZLR2P							
	175	120	16.47	4 410	4.0	35	**2KJ3303 - ■ EM23 - ■ ■ K1**	**P00**
	FZ.39-LE100ZLSA4P							
	71	295	20.71	4 380	0.84	42	**2KJ3302 - ■ FN23 - ■ ■ P1**	
	85	245	17.24	4 360	0.95	42	**2KJ3302 - ■ FN23 - ■ ■ N1**	
	90	230	16.22	4 350	0.99	42	**2KJ3302 - ■ FN23 - ■ ■ M1**	
	101	205	14.54	4 320	1.1	42	**2KJ3302 - ■ FN23 - ■ ■ L1**	
	118	178	12.38	4 210	1.2	42	**2KJ3302 - ■ FN23 - ■ ■ K1**	

Article No. supplement		
Shaft design	**1, 5 or 9**	➞ page 10/44
Frequency and voltage	**2 or 9**	➞ page 11/2
Gearbox mounting type	**A, D, F or H**	➞ page 10/37

© Siemens AG 2017

4

Selection and ordering data (continued)

P_{rated} kW	n_2 rpm	T_2 Nm	i -	F_{R2} N	f_B -	m kg	Article No. (Article No. supplement ➞ below)	Order code No. of poles
2.2	**FZ.39-LE100ZLSA4P**							
	138	152	10.61	4 130	1.3	42	**2KJ3302 - ■ FN23 - ■ ■ J1**	
	160	131	9.13	4 030	1.4	42	**2KJ3302 - ■ FN23 - ■ ■ H1**	
	181	116	8.10	3 840	1.4	42	**2KJ3302 - ■ FN23 - ■ ■ G1**	
	217	97	6.74	3 720	1.6	42	**2KJ3302 - ■ FN23 - ■ ■ F1**	
	231	91	6.35	3 670	1.6	42	**2KJ3302 - ■ FN23 - ■ ■ E1**	
	257	82	5.69	3 590	1.7	42	**2KJ3302 - ■ FN23 - ■ ■ D1**	
	303	69	4.84	3 480	1.8	42	**2KJ3302 - ■ FN23 - ■ ■ C1**	
	353	60	4.15	3 350	2.0	42	**2KJ3302 - ■ FN23 - ■ ■ B1**	
	410	51	3.57	3 240	2.1	42	**2KJ3302 - ■ FN23 - ■ ■ A1**	
	FZ.39-LE90ZLR2P							
	168	125	17.24	4 000	1.9	27	**2KJ3302 - ■ EM23 - ■ ■ N1**	**P00**
	178	118	16.22	3 950	2.0	27	**2KJ3302 - ■ EM23 - ■ ■ M1**	**P00**
	199	106	14.54	3 870	2.1	27	**2KJ3302 - ■ EM23 - ■ ■ L1**	**P00**
	233	90	12.38	3 740	2.3	27	**2KJ3302 - ■ EM23 - ■ ■ K1**	**P00**
	272	77	10.61	3 620	2.6	27	**2KJ3302 - ■ EM23 - ■ ■ J1**	**P00**
	317	66	9.13	3 500	2.8	27	**2KJ3302 - ■ EM23 - ■ ■ H1**	**P00**
	357	59	8.10	3 340	2.8	27	**2KJ3302 - ■ EM23 - ■ ■ G1**	**P00**
	429	49	6.74	3 200	3.1	27	**2KJ3302 - ■ EM23 - ■ ■ F1**	**P00**
	455	46	6.35	3 150	3.2	27	**2KJ3302 - ■ EM23 - ■ ■ E1**	**P00**
	508	41	5.69	3 060	3.4	27	**2KJ3302 - ■ EM23 - ■ ■ D1**	**P00**
	597	35	4.84	2 940	3.6	27	**2KJ3302 - ■ EM23 - ■ ■ C1**	**P00**
	696	30	4.15	2 820	3.9	27	**2KJ3302 - ■ EM23 - ■ ■ B1**	**P00**
	810	26	3.57	2 700	4.2	27	**2KJ3302 - ■ EM23 - ■ ■ A1**	**P00**
	FZ.29-LE100ZLSA4P							
	112	187	13.06	2 910	0.8	35	**2KJ3301 - ■ FN23 - ■ ■ M1**	
	127	165	11.51	2 910	0.87	35	**2KJ3301 - ■ FN23 - ■ ■ L1**	
	147	143	9.99	2 890	0.95	35	**2KJ3301 - ■ FN23 - ■ ■ K1**	
	151	139	9.69	2 690	1.0	35	**2KJ3301 - ■ FN23 - ■ ■ J1**	
	170	124	8.63	2 690	1.1	35	**2KJ3301 - ■ FN23 - ■ ■ H1**	
	184	114	7.97	2 680	1.0	35	**2KJ3301 - ■ FN23 - ■ ■ G1**	
	210	100	6.98	2 650	1.2	35	**2KJ3301 - ■ FN23 - ■ ■ F1**	
	239	88	6.12	2 610	1.3	35	**2KJ3301 - ■ FN23 - ■ ■ E1**	
	264	80	5.55	2 580	1.4	35	**2KJ3301 - ■ FN23 - ■ ■ D1**	
	281	75	5.22	2 560	1.4	35	**2KJ3301 - ■ FN23 - ■ ■ C1**	
	318	66	4.60	2 510	1.5	35	**2KJ3301 - ■ FN23 - ■ ■ B1**	
	366	57	4.00	2 450	1.6	35	**2KJ3301 - ■ FN23 - ■ ■ A1**	
	FZ.29-LE90ZLR2P							
	166	127	17.44	2 860	1.2	21	**2KJ3301 - ■ EM23 - ■ ■ Q1**	**P00**
	189	111	15.29	2 830	1.3	21	**2KJ3301 - ■ EM23 - ■ ■ P1**	**P00**
	208	101	13.88	2 790	1.5	21	**2KJ3301 - ■ EM23 - ■ ■ N1**	**P00**
	221	95	13.06	2 770	1.6	21	**2KJ3301 - ■ EM23 - ■ ■ M1**	**P00**
	251	84	11.51	2 710	1.7	21	**2KJ3301 - ■ EM23 - ■ ■ L1**	**P00**
	289	73	9.99	2 650	1.9	21	**2KJ3301 - ■ EM23 - ■ ■ K1**	**P00**
	298	70	9.69	2 540	2.0	21	**2KJ3301 - ■ EM23 - ■ ■ J1**	**P00**
	335	63	8.63	2 490	2.1	21	**2KJ3301 - ■ EM23 - ■ ■ H1**	**P00**
	363	58	7.97	2 460	2.1	21	**2KJ3301 - ■ EM23 - ■ ■ G1**	**P00**
	414	51	6.98	2 390	2.4	21	**2KJ3301 - ■ EM23 - ■ ■ F1**	**P00**
	472	44	6.12	2 340	2.6	21	**2KJ3301 - ■ EM23 - ■ ■ E1**	**P00**

Article No. supplement		
Shaft design	**1, 5 or 9**	➞ page 10/44
Frequency and voltage	**2 or 9**	➞ page 11/2
Gearbox mounting type	**A, D, F or H**	➞ page 10/37

© Siemens AG 2017

Selection and ordering data (continued)

P_{rated} kW	n_2 rpm	T_2 Nm	i -	F_{R2} N	f_B -	m kg	Article No. (Article No. supplement ➞ below)	Order code No. of poles
2.2	**FZ.29-LE90ZLR2P**							
	521	40	5.55	2 290	2.7	21	**2KJ3301 - ■ EM23 - ■ ■ D1**	**P00**
	554	38	5.22	2 250	2.8	21	**2KJ3301 - ■ EM23 - ■ ■ C1**	**P00**
	628	33	4.60	2 190	2.9	21	**2KJ3301 - ■ EM23 - ■ ■ B1**	**P00**
	722	29	4.00	2 110	3.1	21	**2KJ3301 - ■ EM23 - ■ ■ A1**	**P00**
3	**FD.189-LE132SH6P**							
	2.8	10 200	347.35	110 900	1.9	660	**2KJ3412 - ■ HF23 - ■ ■ T1**	**P01**
	FD.169-LE132SH6P							
	2.6	10 800	368.00	73 500	1.3	448	**2KJ3411 - ■ HF23 - ■ ■ V1**	**P01**
	2.8	10 100	343.01	73 500	1.3	448	**2KJ3411 - ■ HF23 - ■ ■ U1**	**P01**
	3.2	9 000	304.94	73 500	1.5	448	**2KJ3411 - ■ HF23 - ■ ■ T1**	**P01**
	3.5	8 080	273.80	73 500	1.7	448	**2KJ3411 - ■ HF23 - ■ ■ S1**	**P01**
	FD.149-LE132SH6P							
	3.0	9 540	323.04	65 000	0.84	301	**2KJ3410 - ■ HF23 - ■ ■ V1**	**P01**
	3.2	8 980	304.03	65 000	0.89	301	**2KJ3410 - ■ HF23 - ■ ■ U1**	**P01**
	3.4	8 410	285.00	65 000	0.95	301	**2KJ3410 - ■ HF23 - ■ ■ T1**	**P01**
	FD.149-LE100ZLSB4P							
	3.9	7 420	377.00	65 000	1.1	278	**2KJ3410 - ■ FP23 - ■ ■ W1**	
	4.5	6 360	323.04	65 000	1.3	278	**2KJ3410 - ■ FP23 - ■ ■ V1**	
	4.8	5 980	304.03	65 000	1.3	278	**2KJ3410 - ■ FP23 - ■ ■ U1**	
	5.1	5 610	285.00	65 000	1.4	278	**2KJ3410 - ■ FP23 - ■ ■ T1**	
	5.8	4 970	252.64	65 000	1.6	278	**2KJ3410 - ■ FP23 - ■ ■ S1**	
	6.5	4 410	224.42	65 000	1.8	278	**2KJ3410 - ■ FP23 - ■ ■ R1**	
	7.2	3 980	202.50	65 000	2.0	278	**2KJ3410 - ■ FP23 - ■ ■ Q1**	
	FD.129-LE100ZLSB4P							
	4.9	5 890	299.31	36 100	0.82	191	**2KJ3408 - ■ FP23 - ■ ■ Q1**	
	5.2	5 540	281.70	36 500	0.87	191	**2KJ3408 - ■ FP23 - ■ ■ P1**	
	5.6	5 140	261.42	36 900	0.94	191	**2KJ3408 - ■ FP23 - ■ ■ N1**	
	6.3	4 550	231.12	37 400	1.1	191	**2KJ3408 - ■ FP23 - ■ ■ M1**	
	7.1	4 060	206.32	37 500	1.2	191	**2KJ3408 - ■ FP23 - ■ ■ L1**	
	7.8	3 650	185.66	37 500	1.3	191	**2KJ3408 - ■ FP23 - ■ ■ K1**	
	9	3 170	161.14	37 500	1.5	191	**2KJ3408 - ■ FP23 - ■ ■ J1**	
	10	2 850	144.92	37 500	1.7	191	**2KJ3408 - ■ FP23 - ■ ■ H1**	
	11	2 490	126.66	37 500	1.9	191	**2KJ3408 - ■ FP23 - ■ ■ G1**	
	13	2 220	113.03	37 500	2.2	191	**2KJ3408 - ■ FP23 - ■ ■ F1**	
	FD.109-LE100ZLSB4P							
	7.9	3 630	184.46	25 000	0.85	137	**2KJ3407 - ■ FP23 - ■ ■ K1**	
	8.9	3 220	163.83	25 000	0.96	137	**2KJ3407 - ■ FP23 - ■ ■ J1**	
	9.9	2 880	146.65	25 000	1.1	137	**2KJ3407 - ■ FP23 - ■ ■ H1**	
	12	2 460	125.37	25 000	1.3	137	**2KJ3407 - ■ FP23 - ■ ■ G1**	
	13	2 200	111.95	25 000	1.4	137	**2KJ3407 - ■ FP23 - ■ ■ F1**	
	15	1 940	98.94	25 000	1.6	137	**2KJ3407 - ■ FP23 - ■ ■ E1**	
	17	1 710	86.83	25 000	1.8	137	**2KJ3407 - ■ FP23 - ■ ■ D1**	
	19	1 480	75.59	25 000	2.1	137	**2KJ3407 - ■ FP23 - ■ ■ C1**	
	23	1 270	64.62	25 000	2.4	137	**2KJ3407 - ■ FP23 - ■ ■ B1**	
	FZ.109-LE100ZLSB4P							
	21	1 390	70.74	25 000	2.2	134	**2KJ3307 - ■ FP23 - ■ ■ B2**	
	22	1 280	65.30	25 000	2.4	134	**2KJ3307 - ■ FP23 - ■ ■ A2**	
	FD.89-LE100ZLSB4P							
	14	2 090	106.52	17 400	0.88	96	**2KJ3406 - ■ FP23 - ■ ■ F1**	

Article No. supplement		
Shaft design	**1, 5 or 9**	➞ page 10/44
Frequency and voltage	**2 or 9**	➞ page 11/2
Gearbox mounting type	**A, D, F or H**	➞ page 10/37

© Siemens AG 2017

4

Selection and ordering data (continued)

P_{rated} kW	n_2 rpm	T_2 Nm	i -	F_{R2} N	f_B -	m kg	Article No. (Article No. supplement ➞ below)	Order code No. of poles
3	**FD.89-LE100ZLSB4P**							
	16	1 830	93.14	17 400	1.0	96	**2KJ3406 - ■ FP23 - ■ ■ E1**	
	18	1 570	79.95	17 400	1.2	96	**2KJ3406 - ■ FP23 - ■ ■ D1**	
	21	1 390	70.67	17 400	1.3	96	**2KJ3406 - ■ FP23 - ■ ■ C1**	
	24	1 180	60.09	17 400	1.6	96	**2KJ3406 - ■ FP23 - ■ ■ B1**	
	28	1 010	51.51	17 400	1.8	96	**2KJ3406 - ■ FP23 - ■ ■ A1**	
	FZ.89-LE100ZLSB4P							
	24	1 210	61.72	17 400	1.5	95	**2KJ3306 - ■ FP23 - ■ ■ B2**	
	26	1 090	55.72	17 400	1.7	95	**2KJ3306 - ■ FP23 - ■ ■ A2**	
	29	995	50.54	17 400	1.9	95	**2KJ3306 - ■ FP23 - ■ ■ X1**	
	31	915	46.66	17 400	2.0	95	**2KJ3306 - ■ FP23 - ■ ■ W1**	
	34	835	42.41	17 400	2.2	95	**2KJ3306 - ■ FP23 - ■ ■ V1**	
	41	705	35.91	17 400	2.6	95	**2KJ3306 - ■ FP23 - ■ ■ U1**	
	FD.79-LE100ZLSB4P							
	24	1 190	60.82	13 200	0.84	65	**2KJ3405 - ■ FP23 - ■ ■ B1**	
	27	1 040	53.01	13 500	0.96	65	**2KJ3405 - ■ FP23 - ■ ■ A1**	
	FZ.79-LE100ZLSB4P							
	30	945	48.03	13 700	1.1	64	**2KJ3305 - ■ FP23 - ■ ■ W1**	
	34	850	43.18	13 900	1.2	64	**2KJ3305 - ■ FP23 - ■ ■ V1**	
	37	765	39.06	14 000	1.3	64	**2KJ3305 - ■ FP23 - ■ ■ U1**	
	40	710	36.05	14 100	1.4	64	**2KJ3305 - ■ FP23 - ■ ■ T1**	
	44	650	33.02	14 300	1.5	64	**2KJ3305 - ■ FP23 - ■ ■ S1**	
	53	545	27.71	14 500	1.8	64	**2KJ3305 - ■ FP23 - ■ ■ R1**	
	56	510	26.08	14 500	1.9	64	**2KJ3305 - ■ FP23 - ■ ■ Q1**	
	61	470	23.93	14 500	2.1	64	**2KJ3305 - ■ FP23 - ■ ■ P1**	
	70	410	20.90	14 500	2.4	64	**2KJ3305 - ■ FP23 - ■ ■ N1**	
	78	365	18.71	14 500	2.7	64	**2KJ3305 - ■ FP23 - ■ ■ M1**	
	89	320	16.36	14 500	3.1	64	**2KJ3305 - ■ FP23 - ■ ■ L1**	
	FZ.69-LE100ZLSB4P							
	40	715	36.36	6 580	0.84	57	**2KJ3304 - ■ FP23 - ■ ■ S1**	
	44	645	32.78	6 640	0.93	57	**2KJ3304 - ■ FP23 - ■ ■ R1**	
	48	595	30.26	6 670	1.0	57	**2KJ3304 - ■ FP23 - ■ ■ Q1**	
	53	540	27.62	6 700	1.1	57	**2KJ3304 - ■ FP23 - ■ ■ P1**	
	63	450	22.92	6 650	1.3	57	**2KJ3304 - ■ FP23 - ■ ■ N1**	
	67	425	21.57	6 620	1.4	57	**2KJ3304 - ■ FP23 - ■ ■ M1**	
	71	400	20.37	6 600	1.5	57	**2KJ3304 - ■ FP23 - ■ ■ L1**	
	84	340	17.33	6 490	1.8	57	**2KJ3304 - ■ FP23 - ■ ■ K1**	
	98	290	14.85	6 370	2.1	57	**2KJ3304 - ■ FP23 - ■ ■ J1**	
	111	255	13.06	6 240	2.3	57	**2KJ3304 - ■ FP23 - ■ ■ H1**	
	132	215	11.01	6 060	2.8	57	**2KJ3304 - ■ FP23 - ■ ■ G1**	
	152	189	9.60	5 890	3.2	57	**2KJ3304 - ■ FP23 - ■ ■ F1**	
	163	175	8.90	5 740	2.7	57	**2KJ3304 - ■ FP23 - ■ ■ E1**	
	191	150	7.62	5 560	3.1	57	**2KJ3304 - ■ FP23 - ■ ■ D1**	
	217	132	6.70	5 400	3.3	57	**2KJ3304 - ■ FP23 - ■ ■ C1**	
	257	111	5.66	5 190	3.7	57	**2KJ3304 - ■ FP23 - ■ ■ B1**	
	295	97	4.93	5 020	4.0	57	**2KJ3304 - ■ FP23 - ■ ■ A1**	
	FZ.49-LE100ZLSB4P							
	51	565	28.74	4 170	0.85	53	**2KJ3303 - ■ FP23 - ■ ■ Q1**	
	55	515	26.24	4 260	0.93	53	**2KJ3303 - ■ FP23 - ■ ■ P1**	
	67	425	21.77	4 390	1.1	53	**2KJ3303 - ■ FP23 - ■ ■ N1**	

Article No. supplement		
Shaft design	**1, 5 or 9**	➞ page 10/44
Frequency and voltage	**2 or 9**	➞ page 11/2
Gearbox mounting type	**A, D, F or H**	➞ page 10/37

© Siemens AG 2017

Selection and ordering data (continued)

P_{rated}	n_2	T_2	i	F_{R2}	f_B	m	Article No.	Order code
kW	rpm	Nm	-	N	-	kg	(Article No. supplement ➞ below)	No. of poles
3	**FZ.49-LE100ZLSB4P**							
	71	400	20.49	4 410	1.2	53	**2KJ3303 - ■ FP23 - ■ ■ M1**	
	75	380	19.35	4 410	1.3	53	**2KJ3303 - ■ FP23 - ■ ■ L1**	
	88	320	16.47	4 440	1.5	53	**2KJ3303 - ■ FP23 - ■ ■ K1**	
	103	275	14.11	4 400	1.7	53	**2KJ3303 - ■ FP23 - ■ ■ J1**	
	117	240	12.40	4 370	2.0	53	**2KJ3303 - ■ FP23 - ■ ■ H1**	
	139	205	10.46	4 270	2.3	53	**2KJ3303 - ■ FP23 - ■ ■ G1**	
	160	180	9.12	4 190	2.7	53	**2KJ3303 - ■ FP23 - ■ ■ F1**	
	173	165	8.40	4 020	2.7	53	**2KJ3303 - ■ FP23 - ■ ■ E1**	
	202	142	7.20	3 920	3.2	53	**2KJ3303 - ■ FP23 - ■ ■ D1**	
	230	125	6.33	3 840	3.4	53	**2KJ3303 - ■ FP23 - ■ ■ C1**	
	272	105	5.34	3 720	3.8	53	**2KJ3303 - ■ FP23 - ■ ■ B1**	
	313	92	4.65	3 610	4.1	53	**2KJ3303 - ■ FP23 - ■ ■ A1**	
	FZ.39-LE100ZLSB4P							
	118	240	12.38	3 760	0.86	42	**2KJ3302 - ■ FP23 - ■ ■ K1**	
	137	205	10.61	3 750	0.95	42	**2KJ3302 - ■ FP23 - ■ ■ J1**	
	159	180	9.13	3 670	1.1	42	**2KJ3302 - ■ FP23 - ■ ■ H1**	
	180	159	8.10	3 490	1.0	42	**2KJ3302 - ■ FP23 - ■ ■ G1**	
	216	133	6.74	3 430	1.1	42	**2KJ3302 - ■ FP23 - ■ ■ F1**	
	229	125	6.35	3 400	1.2	42	**2KJ3302 - ■ FP23 - ■ ■ E1**	
	256	112	5.69	3 350	1.2	42	**2KJ3302 - ■ FP23 - ■ ■ D1**	
	301	95	4.84	3 270	1.3	42	**2KJ3302 - ■ FP23 - ■ ■ C1**	
	351	82	4.15	3 170	1.4	42	**2KJ3302 - ■ FP23 - ■ ■ B1**	
	408	70	3.57	3 080	1.5	42	**2KJ3302 - ■ FP23 - ■ ■ A1**	
	FZ.29-LE100ZLSB4P							
	208	137	6.98	2 300	0.89	35	**2KJ3301 - ■ FP23 - ■ ■ F1**	
	238	121	6.12	2 300	0.95	35	**2KJ3301 - ■ FP23 - ■ ■ E1**	
	262	109	5.55	2 310	0.99	35	**2KJ3301 - ■ FP23 - ■ ■ D1**	
	279	103	5.22	2 300	1.0	35	**2KJ3301 - ■ FP23 - ■ ■ C1**	
	316	91	4.60	2 280	1.1	35	**2KJ3301 - ■ FP23 - ■ ■ B1**	
	364	79	4.00	2 250	1.2	35	**2KJ3301 - ■ FP23 - ■ ■ A1**	
4	**FD.189-LE132MJ6P**							
	2.8	13 600	347.35	110 900	1.4	665	**2KJ3412 - ■ HK23 - ■ ■ T1**	**P01**
	3.1	12 200	310.76	110 900	1.6	665	**2KJ3412 - ■ HK23 - ■ ■ S1**	**P01**
	3.5	11 000	280.27	110 900	1.7	665	**2KJ3412 - ■ HK23 - ■ ■ R1**	**P01**
	3.9	9 750	247.71	110 900	1.9	665	**2KJ3412 - ■ HK23 - ■ ■ Q1**	**P01**
	FD.169-LE132MJ6P							
	2.6	14 400	368.00	73 500	0.94	453	**2KJ3411 - ■ HK23 - ■ ■ V1**	**P01**
	2.8	13 500	343.01	73 500	1.0	453	**2KJ3411 - ■ HK23 - ■ ■ U1**	**P01**
	3.2	12 000	304.94	73 500	1.1	453	**2KJ3411 - ■ HK23 - ■ ■ T1**	**P01**
	3.5	10 700	273.80	73 500	1.3	453	**2KJ3411 - ■ HK23 - ■ ■ S1**	**P01**
	FD.169-LE112ZMKB4P							
	4.0	9 620	368.00	73 500	1.4	426	**2KJ3411 - ■ GJ23 - ■ ■ V1**	
	4.3	8 970	343.01	73 500	1.5	426	**2KJ3411 - ■ GJ23 - ■ ■ U1**	
	4.8	7 970	304.94	73 500	1.7	426	**2KJ3411 - ■ GJ23 - ■ ■ T1**	
	5.3	7 160	273.80	73 500	1.9	426	**2KJ3411 - ■ GJ23 - ■ ■ S1**	
	5.9	6 480	247.84	73 500	2.1	426	**2KJ3411 - ■ GJ23 - ■ ■ R1**	
	FD.149-LE112ZMKB4P							
	3.9	9 860	377.00	65 000	0.81	280	**2KJ3410 - ■ GJ23 - ■ ■ W1**	
	4.5	8 450	323.04	65 000	0.95	280	**2KJ3410 - ■ GJ23 - ■ ■ V1**	

Article No. supplement		
Shaft design	**1, 5 or 9**	➞ page 10/44
Frequency and voltage	**2 or 9**	➞ page 11/2
Gearbox mounting type	**A, D, F or H**	➞ page 10/37

© Siemens AG 2017

4

Selection and ordering data (continued)

P_{rated}	n_2	T_2	i	F_{R2}	f_B	m	Article No.	Order code
kW	rpm	Nm	-	N	-	kg	(Article No. supplement ➞ below)	No. of poles
4	**FD.149-LE112ZMKB4P**							
	4.8	7 950	304.03	65 000	1.0	280	**2KJ3410 - ■ GJ23 - ■ ■ U1**	
	5.1	7 450	285.00	65 000	1.1	280	**2KJ3410 - ■ GJ23 - ■ ■ T1**	
	5.8	6 610	252.64	65 000	1.2	280	**2KJ3410 - ■ GJ23 - ■ ■ S1**	
	6.5	5 870	224.42	65 000	1.4	280	**2KJ3410 - ■ GJ23 - ■ ■ R1**	
	7.2	5 290	202.50	65 000	1.5	280	**2KJ3410 - ■ GJ23 - ■ ■ Q1**	
	8.1	4 690	179.44	65 000	1.7	280	**2KJ3410 - ■ GJ23 - ■ ■ P1**	
	9.2	4 150	158.91	65 000	1.9	280	**2KJ3410 - ■ GJ23 - ■ ■ N1**	
	10	3 700	141.43	65 000	2.2	280	**2KJ3410 - ■ GJ23 - ■ ■ M1**	
	FD.129-LE112ZMKB4P							
	6.3	6 040	231.12	36 000	0.8	192	**2KJ3408 - ■ GJ23 - ■ ■ M1**	
	7.1	5 390	206.32	36 600	0.9	192	**2KJ3408 - ■ GJ23 - ■ ■ L1**	
	7.9	4 850	185.66	37 200	1.0	192	**2KJ3408 - ■ GJ23 - ■ ■ K1**	
	9.1	4 210	161.14	37 500	1.2	192	**2KJ3408 - ■ GJ23 - ■ ■ J1**	
	10	3 790	144.92	37 500	1.3	192	**2KJ3408 - ■ GJ23 - ■ ■ H1**	
	12	3 310	126.66	37 500	1.5	192	**2KJ3408 - ■ GJ23 - ■ ■ G1**	
	13	2 950	113.03	37 500	1.6	192	**2KJ3408 - ■ GJ23 - ■ ■ F1**	
	15	2 600	99.58	37 500	1.9	192	**2KJ3408 - ■ GJ23 - ■ ■ E1**	
	17	2 280	87.25	37 500	2.1	192	**2KJ3408 - ■ GJ23 - ■ ■ D1**	
	FD.109-LE112ZMKB4P							
	10	3 830	146.65	25 000	0.81	137	**2KJ3407 - ■ GJ23 - ■ ■ H1**	
	12	3 280	125.37	25 000	0.95	137	**2KJ3407 - ■ GJ23 - ■ ■ G1**	
	13	2 920	111.95	25 000	1.1	137	**2KJ3407 - ■ GJ23 - ■ ■ F1**	
	15	2 580	98.94	25 000	1.2	137	**2KJ3407 - ■ GJ23 - ■ ■ E1**	
	17	2 270	86.83	25 000	1.4	137	**2KJ3407 - ■ GJ23 - ■ ■ D1**	
	19	1 970	75.59	25 000	1.6	137	**2KJ3407 - ■ GJ23 - ■ ■ C1**	
	23	1 690	64.62	25 000	1.8	137	**2KJ3407 - ■ GJ23 - ■ ■ B1**	
	26	1 440	55.31	25 000	2.1	137	**2KJ3407 - ■ GJ23 - ■ ■ A1**	
	FZ.109-LE112ZMKB4P							
	21	1 850	70.74	25 000	1.7	134	**2KJ3307 - ■ GJ23 - ■ ■ B2**	
	22	1 700	65.30	25 000	1.8	134	**2KJ3307 - ■ GJ23 - ■ ■ A2**	
	24	1 570	60.12	25 000	2.0	134	**2KJ3307 - ■ GJ23 - ■ ■ X1**	
	28	1 340	51.27	25 000	2.3	134	**2KJ3307 - ■ GJ23 - ■ ■ W1**	
	30	1 260	48.25	25 000	2.5	134	**2KJ3307 - ■ GJ23 - ■ ■ V1**	
	33	1 170	44.78	25 000	2.6	134	**2KJ3307 - ■ GJ23 - ■ ■ U1**	
	FD.89-LE112ZMKB4P							
	18	2 090	79.95	17 400	0.88	96	**2KJ3406 - ■ GJ23 - ■ ■ D1**	
	21	1 840	70.67	17 400	1.0	96	**2KJ3406 - ■ GJ23 - ■ ■ C1**	
	24	1 570	60.09	17 400	1.2	96	**2KJ3406 - ■ GJ23 - ■ ■ B1**	
	28	1 340	51.51	17 400	1.4	96	**2KJ3406 - ■ GJ23 - ■ ■ A1**	
	FZ.89-LE112ZMKB4P							
	24	1 610	61.72	17 400	1.1	95	**2KJ3306 - ■ GJ23 - ■ ■ B2**	
	26	1 450	55.72	17 400	1.3	95	**2KJ3306 - ■ GJ23 - ■ ■ A2**	
	29	1 320	50.54	17 400	1.4	95	**2KJ3306 - ■ GJ23 - ■ ■ X1**	
	31	1 220	46.66	17 400	1.5	95	**2KJ3306 - ■ GJ23 - ■ ■ W1**	
	34	1 110	42.41	17 400	1.7	95	**2KJ3306 - ■ GJ23 - ■ ■ V1**	
	41	940	35.91	17 400	2.0	95	**2KJ3306 - ■ GJ23 - ■ ■ U1**	
	43	880	33.80	17 400	2.1	95	**2KJ3306 - ■ GJ23 - ■ ■ T1**	
	47	815	31.21	17 400	2.3	95	**2KJ3306 - ■ GJ23 - ■ ■ S1**	
	53	725	27.77	17 400	2.5	95	**2KJ3306 - ■ GJ23 - ■ ■ R1**	

Article No. supplement		
Shaft design	**1, 5 or 9**	➞ page 10/44
Frequency and voltage	**2 or 9**	➞ page 11/2
Gearbox mounting type	**A, D, F or H**	➞ page 10/37

© Siemens AG 2017

Selection and ordering data (continued)

P_{rated}	n_2	T_2	i	F_{R2}	f_B	m	Article No.	Order code
kW	rpm	Nm	-	N	-	kg	(Article No. supplement ➞ below)	No. of poles
4	**FZ.89-LE112ZMKB4P**							
	59	645	24.67	17 400	2.9	95	**2KJ3306 - ■ GJ23 - ■ ■ Q1**	
	FZ.79-LE112ZMKB4P							
	30	1 250	48.03	13 100	0.80	65	**2KJ3305 - ■ GJ23 - ■ ■ W1**	
	34	1 130	43.18	13 300	0.89	65	**2KJ3305 - ■ GJ23 - ■ ■ V1**	
	37	1 020	39.06	13 500	0.98	65	**2KJ3305 - ■ GJ23 - ■ ■ U1**	
	40	940	36.05	13 700	1.1	65	**2KJ3305 - ■ GJ23 - ■ ■ T1**	
	44	860	33.02	13 800	1.2	65	**2KJ3305 - ■ GJ23 - ■ ■ S1**	
	53	725	27.71	14 100	1.4	65	**2KJ3305 - ■ GJ23 - ■ ■ R1**	
	56	680	26.08	14 200	1.5	65	**2KJ3305 - ■ GJ23 - ■ ■ Q1**	
	61	625	23.93	14 300	1.6	65	**2KJ3305 - ■ GJ23 - ■ ■ P1**	
	70	545	20.90	14 500	1.8	65	**2KJ3305 - ■ GJ23 - ■ ■ N1**	
	78	490	18.71	14 500	2.0	65	**2KJ3305 - ■ GJ23 - ■ ■ M1**	
	89	425	16.36	14 500	2.3	65	**2KJ3305 - ■ GJ23 - ■ ■ L1**	
	104	365	14.04	14 500	2.7	65	**2KJ3305 - ■ GJ23 - ■ ■ K1**	
	118	325	12.41	14 400	3.1	65	**2KJ3305 - ■ GJ23 - ■ ■ J1**	
	138	275	10.56	13 900	3.6	65	**2KJ3305 - ■ GJ23 - ■ ■ H1**	
	172	220	8.51	13 100	3.2	65	**2KJ3305 - ■ GJ23 - ■ ■ F1**	
	196	195	7.44	12 700	3.7	65	**2KJ3305 - ■ GJ23 - ■ ■ E1**	
	228	167	6.39	12 200	4.3	65	**2KJ3305 - ■ GJ23 - ■ ■ D1**	
	259	148	5.64	11 800	4.7	65	**2KJ3305 - ■ GJ23 - ■ ■ C1**	
	FZ.69-LE112ZMKB4P							
	53	720	27.62	5 580	0.83	58	**2KJ3304 - ■ GJ23 - ■ ■ P1**	
	64	600	22.92	5 710	1.0	58	**2KJ3304 - ■ GJ23 - ■ ■ N1**	
	68	560	21.57	5 770	1.1	58	**2KJ3304 - ■ GJ23 - ■ ■ M1**	
	72	530	20.37	5 780	1.1	58	**2KJ3304 - ■ GJ23 - ■ ■ L1**	
	84	450	17.33	5 800	1.3	58	**2KJ3304 - ■ GJ23 - ■ ■ K1**	
	98	385	14.85	5 770	1.5	58	**2KJ3304 - ■ GJ23 - ■ ■ J1**	
	112	340	13.06	5 710	1.8	58	**2KJ3304 - ■ GJ23 - ■ ■ H1**	
	133	285	11.01	5 620	2.1	58	**2KJ3304 - ■ GJ23 - ■ ■ G1**	
	152	250	9.60	5 500	2.4	58	**2KJ3304 - ■ GJ23 - ■ ■ F1**	
	164	230	8.90	5 380	2.0	58	**2KJ3304 - ■ GJ23 - ■ ■ E1**	
	192	199	7.62	5 230	2.3	58	**2KJ3304 - ■ GJ23 - ■ ■ D1**	
	218	175	6.70	5 110	2.5	58	**2KJ3304 - ■ GJ23 - ■ ■ C1**	
	258	148	5.66	4 950	2.8	58	**2KJ3304 - ■ GJ23 - ■ ■ B1**	
	296	129	4.93	4 800	3.0	58	**2KJ3304 - ■ GJ23 - ■ ■ A1**	
	FZ.49-LE112ZMKB4P							
	67	570	21.77	3 430	0.84	53	**2KJ3303 - ■ GJ23 - ■ ■ N1**	
	71	535	20.49	3 520	0.90	53	**2KJ3303 - ■ GJ23 - ■ ■ M1**	
	75	505	19.35	3 580	0.95	53	**2KJ3303 - ■ GJ23 - ■ ■ L1**	
	89	430	16.47	3 710	1.1	53	**2KJ3303 - ■ GJ23 - ■ ■ K1**	
	103	365	14.11	3 810	1.3	53	**2KJ3303 - ■ GJ23 - ■ ■ J1**	
	118	320	12.40	3 840	1.5	53	**2KJ3303 - ■ GJ23 - ■ ■ H1**	
	140	270	10.46	3 840	1.8	53	**2KJ3303 - ■ GJ23 - ■ ■ G1**	
	160	235	9.12	3 820	2.0	53	**2KJ3303 - ■ GJ23 - ■ ■ F1**	
	174	220	8.40	3 610	2.0	53	**2KJ3303 - ■ GJ23 - ■ ■ E1**	
	203	188	7.20	3 580	2.4	53	**2KJ3303 - ■ GJ23 - ■ ■ D1**	
	231	166	6.33	3 530	2.6	53	**2KJ3303 - ■ GJ23 - ■ ■ C1**	
	273	140	5.34	3 460	2.9	53	**2KJ3303 - ■ GJ23 - ■ ■ B1**	

Article No. supplement		
Shaft design	**1, 5 or 9**	➞ page 10/44
Frequency and voltage	**2 or 9**	➞ page 11/2
Gearbox mounting type	**A, D, F or H**	➞ page 10/37

© Siemens AG 2017

4

Selection and ordering data (continued)

P_{rated} kW	n_2 rpm	T_2 Nm	i -	F_{R2} N	f_B -	m kg	Article No. (Article No. supplement ➞ below)	Order code No. of poles
4	**FZ.49-LE112ZMKB4P**							
	314	122	4.65	3 390	3.1	53	**2KJ3303 - ■ GJ23 - ■ ■ A1**	
	FZ.39-LE112ZMKB4P							
	217	176	6.74	3 060	0.86	45	**2KJ3302 - ■ GJ23 - ■ ■ F1**	
	230	166	6.35	3 050	0.90	45	**2KJ3302 - ■ GJ23 - ■ ■ E1**	
	257	149	5.69	3 040	0.94	45	**2KJ3302 - ■ GJ23 - ■ ■ D1**	
	302	127	4.84	3 000	1.0	45	**2KJ3302 - ■ GJ23 - ■ ■ C1**	
	352	109	4.15	2 940	1.1	45	**2KJ3302 - ■ GJ23 - ■ ■ B1**	
	409	93	3.57	2 890	1.2	45	**2KJ3302 - ■ GJ23 - ■ ■ A1**	
5.5	**FD.189-LE132ZMS6P**							
	2.8	18 800	347.35	110 900	1.0	667	**2KJ3412 - ■ HL23 - ■ ■ T1**	**P01**
	3.1	16 800	310.76	110 900	1.1	667	**2KJ3412 - ■ HL23 - ■ ■ S1**	**P01**
	3.5	15 100	280.27	110 900	1.3	667	**2KJ3412 - ■ HL23 - ■ ■ R1**	**P01**
	3.9	13 400	247.71	110 900	1.4	667	**2KJ3412 - ■ HL23 - ■ ■ Q1**	**P01**
	FD.189-LE132ZST4P							
	4.2	12 400	347.35	110 900	1.5	667	**2KJ3412 - ■ HJ23 - ■ ■ T1**	
	4.7	11 100	310.76	110 900	1.7	667	**2KJ3412 - ■ HJ23 - ■ ■ S1**	
	5.2	10 000	280.27	110 900	1.9	667	**2KJ3412 - ■ HJ23 - ■ ■ R1**	
	5.9	8 880	247.71	110 900	2.1	667	**2KJ3412 - ■ HJ23 - ■ ■ Q1**	
	FD.169-LE132ZMS6P							
	3.2	16 500	304.94	73 500	0.82	455	**2KJ3411 - ■ HL23 - ■ ■ T1**	**P01**
	3.5	14 800	273.80	73 500	0.92	455	**2KJ3411 - ■ HL23 - ■ ■ S1**	**P01**
	FD.169-LE132ZST4P							
	4.0	13 100	368.00	73 500	1.0	455	**2KJ3411 - ■ HJ23 - ■ ■ V1**	
	4.3	12 200	343.01	73 500	1.1	455	**2KJ3411 - ■ HJ23 - ■ ■ U1**	
	4.8	10 900	304.94	73 500	1.2	455	**2KJ3411 - ■ HJ23 - ■ ■ T1**	
	5.4	9 810	273.80	73 500	1.4	455	**2KJ3411 - ■ HJ23 - ■ ■ S1**	
	5.9	8 880	247.84	73 500	1.5	455	**2KJ3411 - ■ HJ23 - ■ ■ R1**	
	6.7	7 800	217.70	73 500	1.7	455	**2KJ3411 - ■ HJ23 - ■ ■ Q1**	
	7.4	7 070	197.27	73 500	1.9	455	**2KJ3411 - ■ HJ23 - ■ ■ P1**	
	FD.149-LE132ZST4P							
	5.8	9 050	252.64	65 000	0.88	308	**2KJ3410 - ■ HJ23 - ■ ■ S1**	
	6.5	8 040	224.42	65 000	0.99	308	**2KJ3410 - ■ HJ23 - ■ ■ R1**	
	7.2	7 260	202.50	65 000	1.1	308	**2KJ3410 - ■ HJ23 - ■ ■ Q1**	
	8.2	6 430	179.44	65 000	1.2	308	**2KJ3410 - ■ HJ23 - ■ ■ P1**	
	9.2	5 690	158.91	65 000	1.4	308	**2KJ3410 - ■ HJ23 - ■ ■ N1**	
	10	5 070	141.43	65 000	1.6	308	**2KJ3410 - ■ HJ23 - ■ ■ M1**	
	12	4 540	126.73	65 000	1.8	308	**2KJ3410 - ■ HJ23 - ■ ■ L1**	
	13	4 020	112.36	65 000	2.0	308	**2KJ3410 - ■ HJ23 - ■ ■ K1**	
	15	3 550	99.18	65 000	2.2	308	**2KJ3410 - ■ HJ23 - ■ ■ J1**	
	FD.129-LE132ZST4P							
	9.1	5 770	161.14	36 300	0.84	222	**2KJ3408 - ■ HJ23 - ■ ■ J1**	
	10	5 190	144.92	36 800	0.93	222	**2KJ3408 - ■ HJ23 - ■ ■ H1**	
	12	4 540	126.66	37 500	1.1	222	**2KJ3408 - ■ HJ23 - ■ ■ G1**	
	13	4 050	113.03	37 500	1.2	222	**2KJ3408 - ■ HJ23 - ■ ■ F1**	
	15	3 570	99.58	37 500	1.4	222	**2KJ3408 - ■ HJ23 - ■ ■ E1**	
	17	3 120	87.25	37 500	1.6	222	**2KJ3408 - ■ HJ23 - ■ ■ D1**	
	19	2 720	76.04	37 500	1.8	222	**2KJ3408 - ■ HJ23 - ■ ■ C1**	
	21	2 480	69.40	37 500	1.9	222	**2KJ3408 - ■ HJ23 - ■ ■ B1**	
	25	2 140	59.75	37 500	2.3	222	**2KJ3408 - ■ HJ23 - ■ ■ A1**	

Article No. supplement		
Shaft design	**1, 5 or 9**	➞ page 10/44
Frequency and voltage	**2 or 9**	➞ page 11/2
Gearbox mounting type	**A, D, F or H**	➞ page 10/37

© Siemens AG 2017

Selection and ordering data (continued)

P_{rated}	n_2	T_2	i	F_{R2}	f_B	m	Article No.	Order code
kW	rpm	Nm	-	N	-	kg	(Article No. supplement ➞ below)	No. of poles
5.5	**FZ.129-LE132ZST4P**							
	21	2 480	69.20	37 500	2.0	217	**2KJ3308 - ■ HJ23 - ■ ■ A2**	
	25	2 120	59.22	37 500	2.3	217	**2KJ3308 - ■ HJ23 - ■ ■ X1**	
	26	1 990	55.74	37 500	2.4	217	**2KJ3308 - ■ HJ23 - ■ ■ W1**	
	FD.109-LE132ZST4P							
	15	3 540	98.94	25 000	0.87	168	**2KJ3407 - ■ HJ23 - ■ ■ E1**	
	17	3 110	86.83	25 000	1.0	168	**2KJ3407 - ■ HJ23 - ■ ■ D1**	
	19	2 710	75.59	25 000	1.1	168	**2KJ3407 - ■ HJ23 - ■ ■ C1**	
	23	2 310	64.62	25 000	1.3	168	**2KJ3407 - ■ HJ23 - ■ ■ B1**	
	26	1 980	55.31	25 000	1.6	168	**2KJ3407 - ■ HJ23 - ■ ■ A1**	
	FZ.109-LE132ZST4P							
	24	2 150	60.12	25 000	1.4	164	**2KJ3307 - ■ HJ23 - ■ ■ X1**	
	29	1 830	51.27	25 000	1.7	164	**2KJ3307 - ■ HJ23 - ■ ■ W1**	
	30	1 730	48.25	25 000	1.8	164	**2KJ3307 - ■ HJ23 - ■ ■ V1**	
	33	1 600	44.78	25 000	1.9	164	**2KJ3307 - ■ HJ23 - ■ ■ U1**	
	37	1 410	39.59	25 000	2.2	164	**2KJ3307 - ■ HJ23 - ■ ■ T1**	
	41	1 260	35.34	25 000	2.4	164	**2KJ3307 - ■ HJ23 - ■ ■ S1**	
	46	1 140	31.80	25 000	2.7	164	**2KJ3307 - ■ HJ23 - ■ ■ R1**	
	FD.89-LE132ZST4P							
	24	2 150	60.09	17 400	0.86	127	**2KJ3406 - ■ HJ23 - ■ ■ B1**	
	28	1 840	51.51	17 400	1.0	127	**2KJ3406 - ■ HJ23 - ■ ■ A1**	
	FZ.89-LE132ZST4P							
	35	1 520	42.41	17 400	1.2	126	**2KJ3306 - ■ HJ23 - ■ ■ V1**	
	41	1 280	35.91	17 400	1.4	126	**2KJ3306 - ■ HJ23 - ■ ■ U1**	
	43	1 210	33.80	17 400	1.5	126	**2KJ3306 - ■ HJ23 - ■ ■ T1**	
	47	1 110	31.21	17 400	1.7	126	**2KJ3306 - ■ HJ23 - ■ ■ S1**	
	53	995	27.77	17 400	1.9	126	**2KJ3306 - ■ HJ23 - ■ ■ R1**	
	59	880	24.67	17 400	2.1	126	**2KJ3306 - ■ HJ23 - ■ ■ Q1**	
	66	790	22.08	17 400	2.3	126	**2KJ3306 - ■ HJ23 - ■ ■ P1**	
	78	675	18.88	17 400	2.7	126	**2KJ3306 - ■ HJ23 - ■ ■ N1**	
	87	600	16.86	17 400	3.1	126	**2KJ3306 - ■ HJ23 - ■ ■ M1**	
	98	530	14.90	17 400	3.5	126	**2KJ3306 - ■ HJ23 - ■ ■ L1**	
	193	270	7.60	17 400	4.0	126	**2KJ3306 - ■ HJ23 - ■ ■ F1**	
	FZ.79-LE132ZST4P							
	44	1 180	33.02	13 200	0.84	96	**2KJ3305 - ■ HJ23 - ■ ■ S1**	
	53	990	27.71	13 600	1.0	96	**2KJ3305 - ■ HJ23 - ■ ■ R1**	
	56	935	26.08	13 700	1.1	96	**2KJ3305 - ■ HJ23 - ■ ■ Q1**	
	61	855	23.93	13 900	1.2	96	**2KJ3305 - ■ HJ23 - ■ ■ P1**	
	70	745	20.90	14 100	1.3	96	**2KJ3305 - ■ HJ23 - ■ ■ N1**	
	78	670	18.71	14 200	1.5	96	**2KJ3305 - ■ HJ23 - ■ ■ M1**	
	90	585	16.36	14 400	1.7	96	**2KJ3305 - ■ HJ23 - ■ ■ L1**	
	104	500	14.04	14 000	2.0	96	**2KJ3305 - ■ HJ23 - ■ ■ K1**	
	118	445	12.41	13 700	2.2	96	**2KJ3305 - ■ HJ23 - ■ ■ J1**	
	139	375	10.56	13 300	2.6	96	**2KJ3305 - ■ HJ23 - ■ ■ H1**	
	162	320	9.05	12 900	3.1	96	**2KJ3305 - ■ HJ23 - ■ ■ G1**	
	172	305	8.51	12 600	2.4	96	**2KJ3305 - ■ HJ23 - ■ ■ F1**	
	197	265	7.44	12 300	2.7	96	**2KJ3305 - ■ HJ23 - ■ ■ E1**	
	229	225	6.39	11 900	3.1	96	**2KJ3305 - ■ HJ23 - ■ ■ D1**	
	260	200	5.64	11 500	3.5	96	**2KJ3305 - ■ HJ23 - ■ ■ C1**	
	305	172	4.80	11 100	3.8	96	**2KJ3305 - ■ HJ23 - ■ ■ B1**	

Article No. supplement		
Shaft design	**1, 5 or 9**	➞ page 10/44
Frequency and voltage	**2 or 9**	➞ page 11/2
Gearbox mounting type	**A, D, F or H**	➞ page 10/37

© Siemens AG 2017

4

Selection and ordering data (continued)

P_{rated} kW	n_2 rpm	T_2 Nm	i -	F_{R2} N	f_B -	m kg	Article No. (Article No. supplement ➞ below)	Order code No. of poles
5.5	**FZ.79-LE132ZST4P**							
	356	147	4.11	10 700	4.1	96	**2KJ3305 - ■ HJ23 - ■ ■ A1**	
	FZ.69-LE132ZST4P							
	72	730	20.37	4 540	0.82	88	**2KJ3304 - ■ HJ23 - ■ ■ L1**	
	85	620	17.33	4 740	0.97	88	**2KJ3304 - ■ HJ23 - ■ ■ K1**	
	99	530	14.85	4 870	1.1	88	**2KJ3304 - ■ HJ23 - ■ ■ J1**	
	112	465	13.06	4 930	1.3	88	**2KJ3304 - ■ HJ23 - ■ ■ H1**	
	133	395	11.01	4 930	1.5	88	**2KJ3304 - ■ HJ23 - ■ ■ G1**	
	153	340	9.60	4 940	1.7	88	**2KJ3304 - ■ HJ23 - ■ ■ F1**	
	165	315	8.90	4 820	1.5	88	**2KJ3304 - ■ HJ23 - ■ ■ E1**	
	192	270	7.62	4 770	1.7	88	**2KJ3304 - ■ HJ23 - ■ ■ D1**	
	219	240	6.70	4 690	1.8	88	**2KJ3304 - ■ HJ23 - ■ ■ C1**	
	259	200	5.66	4 600	2.0	88	**2KJ3304 - ■ HJ23 - ■ ■ B1**	
	297	177	4.93	4 490	2.2	88	**2KJ3304 - ■ HJ23 - ■ ■ A1**	
	FZ.69-LE132ZST4P							
	89	590	16.47	2 660	0.81	76	**2KJ3303 - ■ HJ23 - ■ ■ K1**	
	104	505	14.11	2 890	0.95	76	**2KJ3303 - ■ HJ23 - ■ ■ J1**	
	118	445	12.40	3 020	1.1	76	**2KJ3303 - ■ HJ23 - ■ ■ H1**	
	140	375	10.46	3 150	1.3	76	**2KJ3303 - ■ HJ23 - ■ ■ G1**	
	161	325	9.12	3 220	1.5	76	**2KJ3303 - ■ HJ23 - ■ ■ F1**	
	174	300	8.40	3 020	1.5	76	**2KJ3303 - ■ HJ23 - ■ ■ E1**	
	203	255	7.20	3 090	1.7	76	**2KJ3303 - ■ HJ23 - ■ ■ D1**	
	231	225	6.33	3 100	1.9	76	**2KJ3303 - ■ HJ23 - ■ ■ C1**	
	274	191	5.34	3 090	2.1	76	**2KJ3303 - ■ HJ23 - ■ ■ B1**	
	315	167	4.65	3 060	2.2	76	**2KJ3303 - ■ HJ23 - ■ ■ A1**	
7.5	**FD.189-LE132ZMS4P**							
	4.2	16 900	347.35	110 900	1.1	667	**2KJ3412 - ■ HL23 - ■ ■ T1**	
	4.7	15 100	310.76	110 900	1.3	667	**2KJ3412 - ■ HL23 - ■ ■ S1**	
	5.2	13 600	280.27	110 900	1.4	667	**2KJ3412 - ■ HL23 - ■ ■ R1**	
	5.9	12 000	247.71	110 900	1.6	667	**2KJ3412 - ■ HL23 - ■ ■ Q1**	
	6.5	11 000	226.42	110 900	1.7	667	**2KJ3412 - ■ HL23 - ■ ■ P1**	
	7.2	9 920	203.69	110 900	1.9	667	**2KJ3412 - ■ HL23 - ■ ■ N1**	
	8.1	8 860	182.03	110 900	2.1	667	**2KJ3412 - ■ HL23 - ■ ■ M1**	
	FD.169-LE132ZMS4P							
	4.3	16 700	343.01	73 500	0.81	455	**2KJ3411 - ■ HL23 - ■ ■ U1**	
	4.8	14 800	304.94	73 500	0.92	455	**2KJ3411 - ■ HL23 - ■ ■ T1**	
	5.4	13 300	273.80	73 500	1.0	455	**2KJ3411 - ■ HL23 - ■ ■ S1**	
	5.9	12 000	247.84	73 500	1.1	455	**2KJ3411 - ■ HL23 - ■ ■ R1**	
	6.8	10 600	217.70	73 500	1.3	455	**2KJ3411 - ■ HL23 - ■ ■ Q1**	
	7.5	9 610	197.27	73 500	1.4	455	**2KJ3411 - ■ HL23 - ■ ■ P1**	
	8.4	8 560	175.69	73 500	1.6	455	**2KJ3411 - ■ HL23 - ■ ■ N1**	
	9.3	7 680	157.76	73 500	1.8	455	**2KJ3411 - ■ HL23 - ■ ■ M1**	
	10	6 850	140.77	73 500	2.0	455	**2KJ3411 - ■ HL23 - ■ ■ L1**	
	12	6 110	125.49	73 500	2.2	455	**2KJ3411 - ■ HL23 - ■ ■ K1**	
	FD.149-LE132ZMS4P							
	7.3	9 860	202.50	65 000	0.81	308	**2KJ3410 - ■ HL23 - ■ ■ Q1**	
	8.2	8 740	179.44	65 000	0.92	308	**2KJ3410 - ■ HL23 - ■ ■ P1**	
	9.3	7 740	158.91	65 000	1.0	308	**2KJ3410 - ■ HL23 - ■ ■ N1**	
	10	6 890	141.43	65 000	1.2	308	**2KJ3410 - ■ HL23 - ■ ■ M1**	
	12	6 170	126.73	65 000	1.3	308	**2KJ3410 - ■ HL23 - ■ ■ L1**	

Article No. supplement		
Shaft design	**1, 5 or 9**	➞ page 10/44
Frequency and voltage	**2 or 9**	➞ page 11/2
Gearbox mounting type	**A, D, F or H**	➞ page 10/37

© Siemens AG 2017

Selection and ordering data (continued)

P_{rated}	n_2	T_2	i	F_{R2}	f_B	m	Article No.	Order code
kW	rpm	Nm	-	N	-	kg	(Article No. supplement ➞ below)	No. of poles
7.5	**FD.149-LE132ZMS4P**							
	13	5 470	112.36	65 000	1.5	308	**2KJ3410 - ■ HL23 - ■ ■ K1**	
	15	4 830	99.18	65 000	1.7	308	**2KJ3410 - ■ HL23 - ■ ■ J1**	
	17	4 240	87.20	63 900	1.9	308	**2KJ3410 - ■ HL23 - ■ ■ H1**	
	19	3 840	78.98	62 800	2.1	308	**2KJ3410 - ■ HL23 - ■ ■ G1**	
	21	3 350	68.76	61 000	2.4	308	**2KJ3410 - ■ HL23 - ■ ■ F1**	
	FD.129-LE132ZMS4P							
	13	5 500	113.03	36 500	0.88	222	**2KJ3408 - ■ HL23 - ■ ■ F1**	
	15	4 850	99.58	37 200	1.0	222	**2KJ3408 - ■ HL23 - ■ ■ E1**	
	17	4 250	87.25	37 500	1.1	222	**2KJ3408 - ■ HL23 - ■ ■ D1**	
	19	3 700	76.04	37 500	1.3	222	**2KJ3408 - ■ HL23 - ■ ■ C1**	
	21	3 380	69.40	37 500	1.4	222	**2KJ3408 - ■ HL23 - ■ ■ B1**	
	25	2 910	59.75	37 500	1.7	222	**2KJ3408 - ■ HL23 - ■ ■ A1**	
	FZ.129-LE132ZMS4P							
	21	3 370	69.20	37 500	1.4	217	**2KJ3308 - ■ HL23 - ■ ■ A2**	
	25	2 880	59.22	37 500	1.7	217	**2KJ3308 - ■ HL23 - ■ ■ X1**	
	26	2 710	55.74	37 500	1.8	217	**2KJ3308 - ■ HL23 - ■ ■ W1**	
	28	2 540	52.25	37 500	1.9	217	**2KJ3308 - ■ HL23 - ■ ■ V1**	
	32	2 250	46.32	37 500	2.1	217	**2KJ3308 - ■ HL23 - ■ ■ U1**	
	36	2 000	41.14	37 500	2.4	217	**2KJ3308 - ■ HL23 - ■ ■ T1**	
	40	1 800	37.12	37 500	2.7	217	**2KJ3308 - ■ HL23 - ■ ■ S1**	
	FD.109-LE132ZMS4P							
	19	3 680	75.59	25 000	0.84	168	**2KJ3407 - ■ HL23 - ■ ■ C1**	
	23	3 140	64.62	25 000	0.98	168	**2KJ3407 - ■ HL23 - ■ ■ B1**	
	27	2 690	55.31	25 000	1.2	168	**2KJ3407 - ■ HL23 - ■ ■ A1**	
	FZ.109-LE132ZMS4P							
	24	2 920	60.12	25 000	1.1	164	**2KJ3307 - ■ HL23 - ■ ■ X1**	
	29	2 490	51.27	25 000	1.2	164	**2KJ3307 - ■ HL23 - ■ ■ W1**	
	30	2 350	48.25	25 000	1.3	164	**2KJ3307 - ■ HL23 - ■ ■ V1**	
	33	2 180	44.78	25 000	1.4	164	**2KJ3307 - ■ HL23 - ■ ■ U1**	
	37	1 920	39.59	25 000	1.6	164	**2KJ3307 - ■ HL23 - ■ ■ T1**	
	42	1 720	35.34	25 000	1.8	164	**2KJ3307 - ■ HL23 - ■ ■ S1**	
	46	1 540	31.80	25 000	2.0	164	**2KJ3307 - ■ HL23 - ■ ■ R1**	
	53	1 340	27.60	25 000	2.3	164	**2KJ3307 - ■ HL23 - ■ ■ Q1**	
	59	1 200	24.82	25 000	2.6	164	**2KJ3307 - ■ HL23 - ■ ■ P1**	
	68	1 050	21.70	25 000	2.9	164	**2KJ3307 - ■ HL23 - ■ ■ N1**	
	FZ.89-LE132ZMS4P							
	35	2 060	42.41	17 400	0.9	126	**2KJ3306 - ■ HL23 - ■ ■ V1**	
	41	1 750	35.91	17 400	1.1	126	**2KJ3306 - ■ HL23 - ■ ■ U1**	
	43	1 640	33.80	17 400	1.1	126	**2KJ3306 - ■ HL23 - ■ ■ T1**	
	47	1 520	31.21	17 400	1.2	126	**2KJ3306 - ■ HL23 - ■ ■ S1**	
	53	1 350	27.77	17 400	1.4	126	**2KJ3306 - ■ HL23 - ■ ■ R1**	
	60	1 200	24.67	17 400	1.5	126	**2KJ3306 - ■ HL23 - ■ ■ Q1**	
	67	1 070	22.08	17 400	1.7	126	**2KJ3306 - ■ HL23 - ■ ■ P1**	
	78	920	18.88	17 400	2.0	126	**2KJ3306 - ■ HL23 - ■ ■ N1**	
	87	820	16.86	17 400	2.3	126	**2KJ3306 - ■ HL23 - ■ ■ M1**	
	99	725	14.90	17 400	2.5	126	**2KJ3306 - ■ HL23 - ■ ■ L1**	
	112	635	13.07	17 400	2.9	126	**2KJ3306 - ■ HL23 - ■ ■ K1**	
	129	550	11.38	17 400	3.3	126	**2KJ3306 - ■ HL23 - ■ ■ J1**	
	151	470	9.73	17 400	3.9	126	**2KJ3306 - ■ HL23 - ■ ■ H1**	

Article No. supplement		
Shaft design	**1, 5 or 9**	➞ page 10/44
Frequency and voltage	**2 or 9**	➞ page 11/2
Gearbox mounting type	**A, D, F or H**	➞ page 10/37

© Siemens AG 2017

4

Selection and ordering data (continued)

P_{rated} kW	n_2 rpm	T_2 Nm	i -	F_{R2} N	f_B -	m kg	Article No. (Article No. supplement ➞ below)	Order code No. of poles
7.5	**FZ.89-LE132ZMS4P**							
	193	370	7.60	17 200	3.0	126	**2KJ3306 - ■ HL23 - ■ ■ F1**	
	219	325	6.72	16 800	3.4	126	**2KJ3306 - ■ HL23 - ■ ■ E1**	
	249	285	5.90	16 200	3.9	126	**2KJ3306 - ■ HL23 - ■ ■ D1**	
	287	250	5.13	15 700	4.4	126	**2KJ3306 - ■ HL23 - ■ ■ C1**	
	335	210	4.39	15 100	5.0	126	**2KJ3306 - ■ HL23 - ■ ■ B1**	
	391	183	3.76	14 500	5.4	126	**2KJ3306 - ■ HL23 - ■ ■ A1**	
	FZ.79-LE132ZMS4P							
	61	1 160	23.93	13 300	0.86	96	**2KJ3305 - ■ HL23 - ■ ■ P1**	
	70	1 010	20.90	13 400	0.98	96	**2KJ3305 - ■ HL23 - ■ ■ N1**	
	79	910	18.71	13 400	1.1	96	**2KJ3305 - ■ HL23 - ■ ■ M1**	
	90	795	16.36	13 200	1.3	96	**2KJ3305 - ■ HL23 - ■ ■ L1**	
	105	680	14.04	13 100	1.5	96	**2KJ3305 - ■ HL23 - ■ ■ K1**	
	118	605	12.41	12 800	1.7	96	**2KJ3305 - ■ HL23 - ■ ■ J1**	
	139	515	10.56	12 600	1.9	96	**2KJ3305 - ■ HL23 - ■ ■ H1**	
	162	440	9.05	12 300	2.3	96	**2KJ3305 - ■ HL23 - ■ ■ G1**	
	173	415	8.51	12 000	1.7	96	**2KJ3305 - ■ HL23 - ■ ■ F1**	
	198	360	7.44	11 700	2.0	96	**2KJ3305 - ■ HL23 - ■ ■ E1**	
	230	310	6.39	11 400	2.3	96	**2KJ3305 - ■ HL23 - ■ ■ D1**	
	261	275	5.64	11 100	2.5	96	**2KJ3305 - ■ HL23 - ■ ■ C1**	
	306	230	4.80	10 800	2.8	96	**2KJ3305 - ■ HL23 - ■ ■ B1**	
	358	200	4.11	10 400	3.0	96	**2KJ3305 - ■ HL23 - ■ ■ A1**	
	FZ.69-LE132ZMS4P							
	99	720	14.85	3 680	0.83	88	**2KJ3304 - ■ HL23 - ■ ■ J1**	
	113	635	13.06	3 870	0.94	88	**2KJ3304 - ■ HL23 - ■ ■ H1**	
	134	535	11.01	4 060	1.1	88	**2KJ3304 - ■ HL23 - ■ ■ G1**	
	153	465	9.60	4 160	1.3	88	**2KJ3304 - ■ HL23 - ■ ■ F1**	
	165	430	8.90	4 060	1.1	88	**2KJ3304 - ■ HL23 - ■ ■ E1**	
	193	370	7.62	4 110	1.3	88	**2KJ3304 - ■ HL23 - ■ ■ D1**	
	219	325	6.70	4 130	1.3	88	**2KJ3304 - ■ HL23 - ■ ■ C1**	
	260	275	5.66	4 110	1.5	88	**2KJ3304 - ■ HL23 - ■ ■ B1**	
	298	240	4.93	4 070	1.6	88	**2KJ3304 - ■ HL23 - ■ ■ A1**	
	FZ.49-LE132ZMS4P							
	141	510	10.46	2 260	0.94	84	**2KJ3303 - ■ HL23 - ■ ■ G1**	
	161	440	9.12	2 470	1.1	84	**2KJ3303 - ■ HL23 - ■ ■ F1**	
	175	405	8.40	2 260	1.1	84	**2KJ3303 - ■ HL23 - ■ ■ E1**	
	204	350	7.20	2 390	1.3	84	**2KJ3303 - ■ HL23 - ■ ■ D1**	
	232	305	6.33	2 510	1.4	84	**2KJ3303 - ■ HL23 - ■ ■ C1**	
	275	260	5.34	2 580	1.5	84	**2KJ3303 - ■ HL23 - ■ ■ B1**	
	316	225	4.65	2 630	1.7	84	**2KJ3303 - ■ HL23 - ■ ■ A1**	
9.2	**FD.189-LE160MPA4P**							
	4.2	20 700	347.35	110 900	0.92	684	**2KJ3412 - ■ JQ23 - ■ ■ T1**	
	4.7	18 500	310.76	110 900	1.0	684	**2KJ3412 - ■ JQ23 - ■ ■ S1**	
	5.2	16 700	280.27	110 900	1.1	684	**2KJ3412 - ■ JQ23 - ■ ■ R1**	
	5.9	14 800	247.71	110 900	1.3	684	**2KJ3412 - ■ JQ23 - ■ ■ Q1**	
	6.5	13 500	226.42	110 900	1.4	684	**2KJ3412 - ■ JQ23 - ■ ■ P1**	
	7.2	12 100	203.69	110 900	1.6	684	**2KJ3412 - ■ JQ23 - ■ ■ N1**	
	8.1	10 800	182.03	110 900	1.7	684	**2KJ3412 - ■ JQ23 - ■ ■ M1**	
	8.9	9 830	164.61	110 900	1.9	684	**2KJ3412 - ■ JQ23 - ■ ■ L1**	
	10	8 680	145.28	110 900	2.2	684	**2KJ3412 - ■ JQ23 - ■ ■ K1**	

Article No. supplement		
Shaft design	**1, 5 or 9**	➞ page 10/44
Frequency and voltage	**2 or 9**	➞ page 11/2
Gearbox mounting type	**A, D, F or H**	➞ page 10/37

© Siemens AG 2017

Selection and ordering data (continued)

P_{rated}	n_2	T_2	i	F_{R2}	f_B	m	Article No.	Order code
kW	rpm	Nm	-	N	-	kg	(Article No. supplement ➞ below)	No. of poles
9.2	**FD.169-LE160MPA4P**							
	5.4	16 300	273.80	73 500	0.83	472	**2KJ3411 - ■ JQ23 - ■ ■ S1**	
	5.9	14 800	247.84	73 500	0.92	472	**2KJ3411 - ■ JQ23 - ■ ■ R1**	
	6.8	13 000	217.70	73 500	1.0	472	**2KJ3411 - ■ JQ23 - ■ ■ Q1**	
	7.5	11 700	197.27	73 500	1.2	472	**2KJ3411 - ■ JQ23 - ■ ■ P1**	
	8.4	10 500	175.69	73 500	1.3	472	**2KJ3411 - ■ JQ23 - ■ ■ N1**	
	9.3	9 420	157.76	73 500	1.4	472	**2KJ3411 - ■ JQ23 - ■ ■ M1**	
	10	8 410	140.77	73 500	1.6	472	**2KJ3411 - ■ JQ23 - ■ ■ L1**	
	12	7 500	125.49	73 500	1.8	472	**2KJ3411 - ■ JQ23 - ■ ■ K1**	
	13	6 650	111.30	73 500	2.0	472	**2KJ3411 - ■ JQ23 - ■ ■ J1**	
	14	6 100	102.18	73 500	2.2	472	**2KJ3411 - ■ JQ23 - ■ ■ H1**	
	FD.149-LE160MPA4P							
	9.3	9 490	158.91	65 000	0.84	325	**2KJ3410 - ■ JQ23 - ■ ■ N1**	
	10	8 450	141.43	65 000	0.95	325	**2KJ3410 - ■ JQ23 - ■ ■ M1**	
	12	7 570	126.73	64 500	1.1	325	**2KJ3410 - ■ JQ23 - ■ ■ L1**	
	13	6 710	112.36	63 700	1.2	325	**2KJ3410 - ■ JQ23 - ■ ■ K1**	
	15	5 920	99.18	62 700	1.3	325	**2KJ3410 - ■ JQ23 - ■ ■ J1**	
	17	5 210	87.20	61 500	1.5	325	**2KJ3410 - ■ JQ23 - ■ ■ H1**	
	19	4 720	78.98	60 600	1.7	325	**2KJ3410 - ■ JQ23 - ■ ■ G1**	
	21	4 110	68.76	59 100	1.9	325	**2KJ3410 - ■ JQ23 - ■ ■ F1**	
	26	3 360	56.37	57 000	2.4	325	**2KJ3410 - ■ JQ23 - ■ ■ E1**	
	FD.129-LE160MPA4P							
	15	5 950	99.58	36 100	0.81	239	**2KJ3408 - ■ JQ23 - ■ ■ E1**	
	17	5 210	87.25	36 800	0.93	239	**2KJ3408 - ■ JQ23 - ■ ■ D1**	
	19	4 540	76.04	37 500	1.1	239	**2KJ3408 - ■ JQ23 - ■ ■ C1**	
	21	4 140	69.40	37 500	1.2	239	**2KJ3408 - ■ JQ23 - ■ ■ B1**	
	25	3 570	59.75	37 500	1.4	239	**2KJ3408 - ■ JQ23 - ■ ■ A1**	
	FZ.129-LE160MPA4P							
	21	4 130	69.20	37 500	1.2	234	**2KJ3308 - ■ JQ23 - ■ ■ A2**	
	25	3 540	59.22	37 500	1.4	234	**2KJ3308 - ■ JQ23 - ■ ■ X1**	
	26	3 330	55.74	37 500	1.5	234	**2KJ3308 - ■ JQ23 - ■ ■ W1**	
	28	3 120	52.25	37 500	1.6	234	**2KJ3308 - ■ JQ23 - ■ ■ V1**	
	32	2 760	46.32	37 500	1.8	234	**2KJ3308 - ■ JQ23 - ■ ■ U1**	
	36	2 450	41.14	37 500	2.0	234	**2KJ3308 - ■ JQ23 - ■ ■ T1**	
	40	2 210	37.12	37 500	2.2	234	**2KJ3308 - ■ JQ23 - ■ ■ S1**	
	45	1 960	32.90	37 500	2.5	234	**2KJ3308 - ■ JQ23 - ■ ■ R1**	
	50	1 740	29.13	37 100	2.8	234	**2KJ3308 - ■ JQ23 - ■ ■ Q1**	
	FD.109-LE160MPA4P							
	23	3 860	64.62	25 000	0.80	185	**2KJ3407 - ■ JQ23 - ■ ■ B1**	
	27	3 300	55.31	25 000	0.94	185	**2KJ3407 - ■ JQ23 - ■ ■ A1**	
	FZ.109-LE160MPA4P							
	24	3 590	60.12	25 000	0.86	182	**2KJ3307 - ■ JQ23 - ■ ■ X1**	
	29	3 060	51.27	25 000	1.0	182	**2KJ3307 - ■ JQ23 - ■ ■ W1**	
	30	2 880	48.25	25 000	1.1	182	**2KJ3307 - ■ JQ23 - ■ ■ V1**	
	33	2 670	44.78	25 000	1.2	182	**2KJ3307 - ■ JQ23 - ■ ■ U1**	
	37	2 360	39.59	25 000	1.3	182	**2KJ3307 - ■ JQ23 - ■ ■ T1**	
	42	2 110	35.34	25 000	1.5	182	**2KJ3307 - ■ JQ23 - ■ ■ S1**	
	46	1 900	31.80	25 000	1.6	182	**2KJ3307 - ■ JQ23 - ■ ■ R1**	
	53	1 650	27.60	25 000	1.9	182	**2KJ3307 - ■ JQ23 - ■ ■ Q1**	
	59	1 480	24.82	25 000	2.1	182	**2KJ3307 - ■ JQ23 - ■ ■ P1**	

Article No. supplement		
Shaft design	**1, 5 or 9**	➞ page 10/44
Frequency and voltage	**2 or 9**	➞ page 11/2
Gearbox mounting type	**A, D, F or H**	➞ page 10/37

© Siemens AG 2017

4

Selection and ordering data (continued)

P_{rated} kW	n_2 rpm	T_2 Nm	i -	F_{R2} N	f_B -	m kg	Article No. (Article No. supplement ➞ below)	Order code No. of poles
9.2	**FZ.109-LE160MPA4P**							
	68	1 290	21.70	25 000	2.4	182	**2KJ3307 - ■ JQ23 - ■ ■ N1**	
	76	1 150	19.36	25 000	2.7	182	**2KJ3307 - ■ JQ23 - ■ ■ M1**	
	86	1 020	17.06	24 600	3.0	182	**2KJ3307 - ■ JQ23 - ■ ■ L1**	
	98	890	14.95	23 900	3.5	182	**2KJ3307 - ■ JQ23 - ■ ■ K1**	
	163	535	9.02	21 200	3.9	182	**2KJ3307 - ■ JQ23 - ■ ■ F1**	
	185	475	7.94	20 600	4.2	182	**2KJ3307 - ■ JQ23 - ■ ■ E1**	
	FZ.89-LE160MPA4P							
	41	2 140	35.91	17 400	0.86	145	**2KJ3306 - ■ JQ23 - ■ ■ U1**	
	43	2 020	33.80	17 400	0.92	145	**2KJ3306 - ■ JQ23 - ■ ■ T1**	
	47	1 860	31.21	17 400	0.99	145	**2KJ3306 - ■ JQ23 - ■ ■ S1**	
	53	1 660	27.77	17 400	1.1	145	**2KJ3306 - ■ JQ23 - ■ ■ R1**	
	60	1 470	24.67	17 400	1.3	145	**2KJ3306 - ■ JQ23 - ■ ■ Q1**	
	67	1 320	22.08	17 400	1.4	145	**2KJ3306 - ■ JQ23 - ■ ■ P1**	
	78	1 120	18.88	17 400	1.6	145	**2KJ3306 - ■ JQ23 - ■ ■ N1**	
	87	1 000	16.86	17 400	1.8	145	**2KJ3306 - ■ JQ23 - ■ ■ M1**	
	99	890	14.90	17 400	2.1	145	**2KJ3306 - ■ JQ23 - ■ ■ L1**	
	112	780	13.07	17 400	2.4	145	**2KJ3306 - ■ JQ23 - ■ ■ K1**	
	129	680	11.38	17 400	2.7	145	**2KJ3306 - ■ JQ23 - ■ ■ J1**	
	151	580	9.73	17 400	3.2	145	**2KJ3306 - ■ JQ23 - ■ ■ H1**	
	176	495	8.33	17 300	3.5	145	**2KJ3306 - ■ JQ23 - ■ ■ G1**	
	193	450	7.60	16 900	2.4	145	**2KJ3306 - ■ JQ23 - ■ ■ F1**	
	219	400	6.72	16 400	2.8	145	**2KJ3306 - ■ JQ23 - ■ ■ E1**	
	249	350	5.90	15 900	3.1	145	**2KJ3306 - ■ JQ23 - ■ ■ D1**	
	287	305	5.13	15 400	3.6	145	**2KJ3306 - ■ JQ23 - ■ ■ C1**	
	335	260	4.39	14 900	4.0	145	**2KJ3306 - ■ JQ23 - ■ ■ B1**	
	391	225	3.76	14 300	4.4	145	**2KJ3306 - ■ JQ23 - ■ ■ A1**	
	FZ.79-LE160MPA4P							
	70	1 240	20.90	12 200	0.80	114	**2KJ3305 - ■ JQ23 - ■ ■ N1**	
	79	1 110	18.71	12 300	0.89	114	**2KJ3305 - ■ JQ23 - ■ ■ M1**	
	90	975	16.36	12 300	1.0	114	**2KJ3305 - ■ JQ23 - ■ ■ L1**	
	105	835	14.04	12 200	1.2	114	**2KJ3305 - ■ JQ23 - ■ ■ K1**	
	118	740	12.41	12 100	1.3	114	**2KJ3305 - ■ JQ23 - ■ ■ J1**	
	139	630	10.56	12 000	1.6	114	**2KJ3305 - ■ JQ23 - ■ ■ H1**	
	162	540	9.05	11 700	1.8	114	**2KJ3305 - ■ JQ23 - ■ ■ G1**	
	173	505	8.51	11 500	1.4	114	**2KJ3305 - ■ JQ23 - ■ ■ F1**	
	198	445	7.44	11 300	1.6	114	**2KJ3305 - ■ JQ23 - ■ ■ E1**	
	230	380	6.39	11 000	1.9	114	**2KJ3305 - ■ JQ23 - ■ ■ D1**	
	261	335	5.64	10 800	2.1	114	**2KJ3305 - ■ JQ23 - ■ ■ C1**	
	306	285	4.80	10 400	2.3	114	**2KJ3305 - ■ JQ23 - ■ ■ B1**	
	358	245	4.11	10 100	2.5	114	**2KJ3305 - ■ JQ23 - ■ ■ A1**	
11	**FD.189-LE160MPB4P**							
	4.7	22 100	310.76	110 800	0.86	676	**2KJ3412 - ■ JR23 - ■ ■ S1**	
	5.3	19 900	280.27	110 900	0.95	676	**2KJ3412 - ■ JR23 - ■ ■ R1**	
	6.0	17 600	247.71	110 900	1.1	676	**2KJ3412 - ■ JR23 - ■ ■ Q1**	
	6.5	16 100	226.42	110 900	1.2	676	**2KJ3412 - ■ JR23 - ■ ■ P1**	
	7.2	14 500	203.69	110 900	1.3	676	**2KJ3412 - ■ JR23 - ■ ■ N1**	
	8.1	12 900	182.03	110 900	1.5	676	**2KJ3412 - ■ JR23 - ■ ■ M1**	
	9.0	11 700	164.61	110 900	1.6	676	**2KJ3412 - ■ JR23 - ■ ■ L1**	

Article No. supplement		
Shaft design	**1, 5 or 9**	➞ page 10/44
Frequency and voltage	**2 or 9**	➞ page 11/2
Gearbox mounting type	**A, D, F or H**	➞ page 10/37

© Siemens AG 2017

Selection and ordering data (continued)

P_{rated}	n_2	T_2	i	F_{R2}	f_B	m	Article No.	Order code
kW	rpm	Nm	-	N	-	kg	(Article No. supplement ➞ below)	No. of poles
11	**FD.189-LE160MPB4P**							
	10	10 300	145.28	110 900	1.8	676	**2KJ3412 - ■ JR23 - ■ ■ K1**	
	11	9 210	129.45	110 900	2.1	676	**2KJ3412 - ■ JR23 - ■ ■ J1**	
	FD.169-LE160MPB4P							
	6.8	15 500	217.70	73 500	0.88	464	**2KJ3411 - ■ JR23 - ■ ■ Q1**	
	7.5	14 000	197.27	73 500	0.97	464	**2KJ3411 - ■ JR23 - ■ ■ P1**	
	8.4	12 500	175.69	73 500	1.1	464	**2KJ3411 - ■ JR23 - ■ ■ N1**	
	9.3	11 200	157.76	73 500	1.2	464	**2KJ3411 - ■ JR23 - ■ ■ M1**	
	10	10 000	140.77	73 500	1.4	464	**2KJ3411 - ■ JR23 - ■ ■ L1**	
	12	8 930	125.49	73 500	1.5	464	**2KJ3411 - ■ JR23 - ■ ■ K1**	
	13	7 920	111.30	73 500	1.7	464	**2KJ3411 - ■ JR23 - ■ ■ J1**	
	14	7 270	102.18	73 500	1.9	464	**2KJ3411 - ■ JR23 - ■ ■ H1**	
	16	6 410	90.03	73 500	2.1	464	**2KJ3411 - ■ JR23 - ■ ■ G1**	
	FD.149-LE160MPB4P							
	12	9 020	126.73	60 700	0.89	317	**2KJ3410 - ■ JR23 - ■ ■ L1**	
	13	8 000	112.36	60 300	1.0	317	**2KJ3410 - ■ JR23 - ■ ■ K1**	
	15	7 060	99.18	59 700	1.1	317	**2KJ3410 - ■ JR23 - ■ ■ J1**	
	17	6 210	87.20	58 900	1.3	317	**2KJ3410 - ■ JR23 - ■ ■ H1**	
	19	5 620	78.98	58 200	1.4	317	**2KJ3410 - ■ JR23 - ■ ■ G1**	
	21	4 890	68.76	57 100	1.6	317	**2KJ3410 - ■ JR23 - ■ ■ F1**	
	26	4 010	56.37	55 300	2.0	317	**2KJ3410 - ■ JR23 - ■ ■ E1**	
	29	3 560	50.01	54 100	2.2	317	**2KJ3410 - ■ JR23 - ■ ■ D1**	
	33	3 220	45.30	53 100	2.5	317	**2KJ3410 - ■ JR23 - ■ ■ C1**	
	FZ.149-LE160MPB4P							
	30	3 450	48.48	53 800	2.3	311	**2KJ3310 - ■ JR23 - ■ ■ T1**	
	34	3 120	43.89	52 800	2.6	311	**2KJ3310 - ■ JR23 - ■ ■ S1**	
	FD.129-LE160MPB4P							
	19	5 410	76.04	36 600	0.9	231	**2KJ3408 - ■ JR23 - ■ ■ C1**	
	21	4 940	69.40	37 100	0.98	231	**2KJ3408 - ■ JR23 - ■ ■ B1**	
	25	4 250	59.75	37 500	1.1	231	**2KJ3408 - ■ JR23 - ■ ■ A1**	
	FZ.129-LE160MPB4P							
	21	4 920	69.20	37 100	0.98	226	**2KJ3308 - ■ JR23 - ■ ■ A2**	
	25	4 210	59.22	37 500	1.1	226	**2KJ3308 - ■ JR23 - ■ ■ X1**	
	26	3 970	55.74	37 500	1.2	226	**2KJ3308 - ■ JR23 - ■ ■ W1**	
	28	3 720	52.25	37 500	1.3	226	**2KJ3308 - ■ JR23 - ■ ■ V1**	
	32	3 290	46.32	37 500	1.5	226	**2KJ3308 - ■ JR23 - ■ ■ U1**	
	36	2 930	41.14	37 500	1.7	226	**2KJ3308 - ■ JR23 - ■ ■ T1**	
	40	2 640	37.12	37 500	1.8	226	**2KJ3308 - ■ JR23 - ■ ■ S1**	
	45	2 340	32.90	36 900	2.1	226	**2KJ3308 - ■ JR23 - ■ ■ R1**	
	51	2 070	29.13	36 100	2.3	226	**2KJ3308 - ■ JR23 - ■ ■ Q1**	
	57	1 840	25.93	35 300	2.6	226	**2KJ3308 - ■ JR23 - ■ ■ P1**	
	63	1 650	23.23	34 500	2.9	226	**2KJ3308 - ■ JR23 - ■ ■ N1**	
	FZ.109-LE160MPB4P							
	29	3 650	51.27	25 000	0.85	174	**2KJ3307 - ■ JR23 - ■ ■ W1**	
	31	3 430	48.25	25 000	0.90	174	**2KJ3307 - ■ JR23 - ■ ■ V1**	
	33	3 180	44.78	25 000	0.97	174	**2KJ3307 - ■ JR23 - ■ ■ U1**	
	37	2 820	39.59	25 000	1.1	174	**2KJ3307 - ■ JR23 - ■ ■ T1**	
	42	2 510	35.34	25 000	1.2	174	**2KJ3307 - ■ JR23 - ■ ■ S1**	
	46	2 260	31.80	25 000	1.4	174	**2KJ3307 - ■ JR23 - ■ ■ R1**	
	53	1 960	27.60	25 000	1.6	174	**2KJ3307 - ■ JR23 - ■ ■ Q1**	

Article No. supplement		
Shaft design	**1, 5 or 9**	➞ page 10/44
Frequency and voltage	**2 or 9**	➞ page 11/2
Gearbox mounting type	**A, D, F or H**	➞ page 10/37

© Siemens AG 2017

4

Selection and ordering data (continued)

P_{rated} kW	n_2 rpm	T_2 Nm	i -	F_{R2} N	f_B -	m kg	Article No. (Article No. supplement ➞ below)	Order code No. of poles
11	**FZ.109-LE160MPB4P**							
	59	1 760	24.82	25 000	1.8	174	**2KJ3307 - ■ JR23 - ■ ■ P1**	
	68	1 540	21.70	24 900	2.0	174	**2KJ3307 - ■ JR23 - ■ ■ N1**	
	76	1 370	19.36	24 500	2.2	174	**2KJ3307 - ■ JR23 - ■ ■ M1**	
	86	1 210	17.06	23 900	2.6	174	**2KJ3307 - ■ JR23 - ■ ■ L1**	
	99	1 060	14.95	23 300	2.9	174	**2KJ3307 - ■ JR23 - ■ ■ K1**	
	113	925	13.03	22 700	3.3	174	**2KJ3307 - ■ JR23 - ■ ■ J1**	
	124	845	11.89	22 200	3.6	174	**2KJ3307 - ■ JR23 - ■ ■ H1**	
	164	640	9.02	20 900	3.3	174	**2KJ3307 - ■ JR23 - ■ ■ F1**	
	186	565	7.94	20 300	3.5	174	**2KJ3307 - ■ JR23 - ■ ■ E1**	
	212	495	6.96	19 600	3.8	174	**2KJ3307 - ■ JR23 - ■ ■ D1**	
	243	430	6.07	19 000	4.2	174	**2KJ3307 - ■ JR23 - ■ ■ C1**	
	266	395	5.54	18 500	4.4	174	**2KJ3307 - ■ JR23 - ■ ■ B1**	
	309	340	4.77	17 900	4.8	174	**2KJ3307 - ■ JR23 - ■ ■ A1**	
	FZ.89-LE160MPB4P							
	47	2 220	31.21	17 400	0.83	137	**2KJ3306 - ■ JR23 - ■ ■ S1**	
	53	1 970	27.77	17 400	0.94	137	**2KJ3306 - ■ JR23 - ■ ■ R1**	
	60	1 750	24.67	17 400	1.1	137	**2KJ3306 - ■ JR23 - ■ ■ Q1**	
	67	1 570	22.08	17 400	1.2	137	**2KJ3306 - ■ JR23 - ■ ■ P1**	
	78	1 340	18.88	17 400	1.4	137	**2KJ3306 - ■ JR23 - ■ ■ N1**	
	87	1 200	16.86	17 400	1.5	137	**2KJ3306 - ■ JR23 - ■ ■ M1**	
	99	1 060	14.90	17 400	1.7	137	**2KJ3306 - ■ JR23 - ■ ■ L1**	
	113	930	13.07	17 400	2.0	137	**2KJ3306 - ■ JR23 - ■ ■ K1**	
	130	810	11.38	17 400	2.3	137	**2KJ3306 - ■ JR23 - ■ ■ J1**	
	152	690	9.73	17 400	2.7	137	**2KJ3306 - ■ JR23 - ■ ■ H1**	
	177	590	8.33	16 900	2.9	137	**2KJ3306 - ■ JR23 - ■ ■ G1**	
	194	540	7.60	16 500	2.0	137	**2KJ3306 - ■ JR23 - ■ ■ F1**	
	219	475	6.72	16 100	2.3	137	**2KJ3306 - ■ JR23 - ■ ■ E1**	
	250	420	5.90	15 600	2.6	137	**2KJ3306 - ■ JR23 - ■ ■ D1**	
	288	365	5.13	15 100	3.0	137	**2KJ3306 - ■ JR23 - ■ ■ C1**	
	336	310	4.39	14 600	3.4	137	**2KJ3306 - ■ JR23 - ■ ■ B1**	
	392	265	3.76	14 100	3.7	137	**2KJ3306 - ■ JR23 - ■ ■ A1**	
	FZ.79-LE160MPB4P							
	90	1 160	16.36	11 300	0.86	106	**2KJ3305 - ■ JR23 - ■ ■ L1**	
	105	1 000	14.04	11 400	1.0	106	**2KJ3305 - ■ JR23 - ■ ■ K1**	
	119	880	12.41	11 400	1.1	106	**2KJ3305 - ■ JR23 - ■ ■ J1**	
	140	750	10.56	11 300	1.3	106	**2KJ3305 - ■ JR23 - ■ ■ H1**	
	163	645	9.05	11 200	1.6	106	**2KJ3305 - ■ JR23 - ■ ■ G1**	
	173	605	8.51	10 900	1.2	106	**2KJ3305 - ■ JR23 - ■ ■ F1**	
	198	530	7.44	10 800	1.4	106	**2KJ3305 - ■ JR23 - ■ ■ E1**	
	231	455	6.39	10 600	1.6	106	**2KJ3305 - ■ JR23 - ■ ■ D1**	
	262	400	5.64	10 400	1.7	106	**2KJ3305 - ■ JR23 - ■ ■ C1**	
	307	340	4.80	10 100	1.9	106	**2KJ3305 - ■ JR23 - ■ ■ B1**	
	359	290	4.11	9 910	2.1	106	**2KJ3305 - ■ JR23 - ■ ■ A1**	
15	**FD.189-LE160ZLL4P**							
	6.5	21 900	226.42	110 900	0.86	701	**2KJ3412 - ■ JU23 - ■ ■ P1**	
	7.2	19 700	203.69	110 900	0.96	701	**2KJ3412 - ■ JU23 - ■ ■ N1**	
	8.1	17 600	182.03	110 900	1.1	701	**2KJ3412 - ■ JU23 - ■ ■ M1**	
	9.0	15 900	164.61	110 900	1.2	701	**2KJ3412 - ■ JU23 - ■ ■ L1**	

Article No. supplement		
Shaft design	**1, 5 or 9**	➞ page 10/44
Frequency and voltage	**2 or 9**	➞ page 11/2
Gearbox mounting type	**A, D, F or H**	➞ page 10/37

© Siemens AG 2017

Selection and ordering data (continued)

P_{rated}	n_2	T_2	i	F_{R2}	f_B	m	Article No.	Order code
kW	rpm	Nm	-	N	-	kg	(Article No. supplement ➞ below)	No. of poles
15	**FD.189-LE160ZLL4P**							
	10	14 100	145.28	110 900	1.3	701	**2KJ3412 - ■ JU23 - ■ ■ K1**	
	11	12 500	129.45	110 900	1.5	701	**2KJ3412 - ■ JU23 - ■ ■ J1**	
	13	11 300	117.27	110 900	1.7	701	**2KJ3412 - ■ JU23 - ■ ■ H1**	
	14	10 200	105.48	110 900	1.9	701	**2KJ3412 - ■ JU23 - ■ ■ G1**	
	17	8 510	87.65	110 900	2.2	701	**2KJ3412 - ■ JU23 - ■ ■ F1**	
	FD.169-LE160ZLL4P							
	8.4	17 000	175.69	73 500	0.80	489	**2KJ3411 - ■ JU23 - ■ ■ N1**	
	9.3	15 300	157.76	73 500	0.89	489	**2KJ3411 - ■ JU23 - ■ ■ M1**	
	10	13 600	140.77	73 500	0.99	489	**2KJ3411 - ■ JU23 - ■ ■ L1**	
	12	12 100	125.49	73 500	1.1	489	**2KJ3411 - ■ JU23 - ■ ■ K1**	
	13	10 800	111.30	73 500	1.3	489	**2KJ3411 - ■ JU23 - ■ ■ J1**	
	14	9 920	102.18	73 500	1.4	489	**2KJ3411 - ■ JU23 - ■ ■ H1**	
	16	8 740	90.03	73 500	1.6	489	**2KJ3411 - ■ JU23 - ■ ■ G1**	
	20	7 170	73.85	73 500	1.9	489	**2KJ3411 - ■ JU23 - ■ ■ F1**	
	23	6 280	64.75	73 500	2.2	489	**2KJ3411 - ■ JU23 - ■ ■ E1**	
	FD.149-LE160ZLL4P							
	15	9 630	99.18	53 300	0.83	342	**2KJ3410 - ■ JU23 - ■ ■ J1**	
	17	8 460	87.20	53 300	0.94	342	**2KJ3410 - ■ JU23 - ■ ■ H1**	
	19	7 670	78.98	53 100	1.0	342	**2KJ3410 - ■ JU23 - ■ ■ G1**	
	21	6 670	68.76	52 700	1.2	342	**2KJ3410 - ■ JU23 - ■ ■ F1**	
	26	5 470	56.37	51 600	1.5	342	**2KJ3410 - ■ JU23 - ■ ■ E1**	
	29	4 850	50.01	50 900	1.6	342	**2KJ3410 - ■ JU23 - ■ ■ D1**	
	33	4 390	45.30	50 200	1.8	342	**2KJ3410 - ■ JU23 - ■ ■ C1**	
	37	3 820	39.43	49 100	2.1	342	**2KJ3410 - ■ JU23 - ■ ■ B1**	
	46	3 140	32.33	47 400	2.4	342	**2KJ3410 - ■ JU23 - ■ ■ A1**	
	FZ.149-LE160ZLL4P							
	30	4 700	48.48	50 700	1.7	336	**2KJ3310 - ■ JU23 - ■ ■ T1**	
	34	4 260	43.89	49 900	1.9	336	**2KJ3310 - ■ JU23 - ■ ■ S1**	
	38	3 740	38.55	48 900	2.1	336	**2KJ3310 - ■ JU23 - ■ ■ R1**	
	42	3 390	34.93	48 100	2.4	336	**2KJ3310 - ■ JU23 - ■ ■ Q1**	
	47	3 020	31.11	47 100	2.6	336	**2KJ3310 - ■ JU23 - ■ ■ P1**	
	53	2 710	27.94	46 100	2.9	336	**2KJ3310 - ■ JU23 - ■ ■ N1**	
	FD.129-LE160ZLL4P							
	25	5 800	59.75	35 800	0.84	256	**2KJ3408 - ■ JU23 - ■ ■ A1**	
	FZ.129-LE160ZLL4P							
	25	5 750	59.22	35 800	0.84	251	**2KJ3308 - ■ JU23 - ■ ■ X1**	
	26	5 410	55.74	35 800	0.90	251	**2KJ3308 - ■ JU23 - ■ ■ W1**	
	28	5 070	52.25	35 800	0.96	251	**2KJ3308 - ■ JU23 - ■ ■ V1**	
	32	4 490	46.32	35 600	1.1	251	**2KJ3308 - ■ JU23 - ■ ■ U1**	
	36	3 990	41.14	35 300	1.2	251	**2KJ3308 - ■ JU23 - ■ ■ T1**	
	40	3 600	37.12	35 000	1.3	251	**2KJ3308 - ■ JU23 - ■ ■ S1**	
	45	3 190	32.90	34 600	1.5	251	**2KJ3308 - ■ JU23 - ■ ■ R1**	
	51	2 820	29.13	34 000	1.7	251	**2KJ3308 - ■ JU23 - ■ ■ Q1**	
	57	2 510	25.93	33 400	1.9	251	**2KJ3308 - ■ JU23 - ■ ■ P1**	
	63	2 250	23.23	32 900	2.1	251	**2KJ3308 - ■ JU23 - ■ ■ N1**	
	72	2 000	20.60	32 200	2.4	251	**2KJ3308 - ■ JU23 - ■ ■ M1**	
	81	1 760	18.18	31 500	2.7	251	**2KJ3308 - ■ JU23 - ■ ■ L1**	
	92	1 550	15.99	30 700	3.1	251	**2KJ3308 - ■ JU23 - ■ ■ K1**	

Article No. supplement		
Shaft design	**1, 5 or 9**	➞ page 10/44
Frequency and voltage	**2 or 9**	➞ page 11/2
Gearbox mounting type	**A, D, F or H**	➞ page 10/37

© Siemens AG 2017

4

Selection and ordering data (continued)

P_{rated} kW	n_2 rpm	T_2 Nm	i -	F_{R2} N	f_B -	m kg	Article No. (Article No. supplement ➞ below)	Order code No. of poles
15	**FZ.129-LE160ZLL4P**							
	102	1 400	14.48	30 000	3.3	251	**2KJ3308 - ■ JU23 - ■ ■ J1**	
	117	1 220	12.61	29 200	3.7	251	**2KJ3308 - ■ JU23 - ■ ■ H1**	
	151	950	9.80	27 300	3.8	251	**2KJ3308 - ■ JU23 - ■ ■ F1**	
	FZ.109-LE160ZLL4P							
	37	3 840	39.59	23 300	0.81	199	**2KJ3307 - ■ JU23 - ■ ■ T1**	
	42	3 430	35.34	23 400	0.90	199	**2KJ3307 - ■ JU23 - ■ ■ S1**	
	46	3 080	31.80	23 500	1.0	199	**2KJ3307 - ■ JU23 - ■ ■ R1**	
	53	2 680	27.60	23 400	1.2	199	**2KJ3307 - ■ JU23 - ■ ■ Q1**	
	59	2 410	24.82	23 300	1.3	199	**2KJ3307 - ■ JU23 - ■ ■ P1**	
	68	2 100	21.70	23 100	1.5	199	**2KJ3307 - ■ JU23 - ■ ■ N1**	
	76	1 880	19.36	22 800	1.6	199	**2KJ3307 - ■ JU23 - ■ ■ M1**	
	86	1 650	17.06	22 500	1.9	199	**2KJ3307 - ■ JU23 - ■ ■ L1**	
	99	1 450	14.95	22 000	2.1	199	**2KJ3307 - ■ JU23 - ■ ■ K1**	
	113	1 260	13.03	21 600	2.4	199	**2KJ3307 - ■ JU23 - ■ ■ J1**	
	124	1 150	11.89	21 200	2.6	199	**2KJ3307 - ■ JU23 - ■ ■ H1**	
	144	990	10.23	20 700	2.9	199	**2KJ3307 - ■ JU23 - ■ ■ G1**	
	164	875	9.02	20 100	2.4	199	**2KJ3307 - ■ JU23 - ■ ■ F1**	
	186	770	7.94	19 600	2.6	199	**2KJ3307 - ■ JU23 - ■ ■ E1**	
	212	675	6.96	19 000	2.8	199	**2KJ3307 - ■ JU23 - ■ ■ D1**	
	243	590	6.07	18 400	3.1	199	**2KJ3307 - ■ JU23 - ■ ■ C1**	
	266	535	5.54	18 100	3.2	199	**2KJ3307 - ■ JU23 - ■ ■ B1**	
	309	460	4.77	17 500	3.5	199	**2KJ3307 - ■ JU23 - ■ ■ A1**	
	FZ.89-LE160ZLL4P							
	67	2 140	22.08	17 100	0.86	162	**2KJ3306 - ■ JU23 - ■ ■ P1**	
	78	1 830	18.88	17 200	1.0	162	**2KJ3306 - ■ JU23 - ■ ■ N1**	
	87	1 630	16.86	17 200	1.1	162	**2KJ3306 - ■ JU23 - ■ ■ M1**	
	99	1 440	14.90	17 100	1.3	162	**2KJ3306 - ■ JU23 - ■ ■ L1**	
	113	1 260	13.07	17 000	1.5	162	**2KJ3306 - ■ JU23 - ■ ■ K1**	
	130	1 100	11.38	16 700	1.7	162	**2KJ3306 - ■ JU23 - ■ ■ J1**	
	152	945	9.73	16 400	2.0	162	**2KJ3306 - ■ JU23 - ■ ■ H1**	
	177	805	8.33	16 000	2.2	162	**2KJ3306 - ■ JU23 - ■ ■ G1**	
	194	735	7.60	15 600	1.5	162	**2KJ3306 - ■ JU23 - ■ ■ F1**	
	219	650	6.72	15 300	1.7	162	**2KJ3306 - ■ JU23 - ■ ■ E1**	
	250	570	5.90	15 000	1.9	162	**2KJ3306 - ■ JU23 - ■ ■ D1**	
	288	495	5.13	14 600	2.2	162	**2KJ3306 - ■ JU23 - ■ ■ C1**	
	336	425	4.39	14 100	2.5	162	**2KJ3306 - ■ JU23 - ■ ■ B1**	
	392	365	3.76	13 600	2.7	162	**2KJ3306 - ■ JU23 - ■ ■ A1**	
	FZ.79-LE160ZLL4P							
	119	1 200	12.41	9 750	0.83	131	**2KJ3305 - ■ JU23 - ■ ■ J1**	
	140	1 020	10.56	9 930	0.98	131	**2KJ3305 - ■ JU23 - ■ ■ H1**	
	163	875	9.05	10 000	1.1	131	**2KJ3305 - ■ JU23 - ■ ■ G1**	
	173	825	8.51	9 720	0.87	131	**2KJ3305 - ■ JU23 - ■ ■ F1**	
	198	720	7.44	9 740	1.0	131	**2KJ3305 - ■ JU23 - ■ ■ E1**	
	231	620	6.39	9 680	1.2	131	**2KJ3305 - ■ JU23 - ■ ■ D1**	
	262	545	5.64	9 630	1.3	131	**2KJ3305 - ■ JU23 - ■ ■ C1**	
	307	465	4.80	9 470	1.4	131	**2KJ3305 - ■ JU23 - ■ ■ B1**	
	359	395	4.11	9 320	1.5	131	**2KJ3305 - ■ JU23 - ■ ■ A1**	

Article No. supplement		
Shaft design	**1, 5 or 9**	➞ page 10/44
Frequency and voltage	**2 or 9**	➞ page 11/2
Gearbox mounting type	**A, D, F or H**	➞ page 10/37

© Siemens AG 2017

Selection and ordering data (continued)

P_{rated}	n_2	T_2	i	F_{R2}	f_B	m	Article No.	Order code
kW	rpm	Nm	-	N	-	kg	(Article No. supplement ➞ below)	No. of poles
18.5	**FD.189-LES180MQ4P**							
	8.0	21 900	182.03	110 900	0.87	750	**2KJ3412 - ■ KL33 - ■ ■ M1**	
	8.9	19 800	164.61	110 900	0.96	750	**2KJ3412 - ■ KL33 - ■ ■ L1**	
	10	17 500	145.28	110 900	1.1	750	**2KJ3412 - ■ KL33 - ■ ■ K1**	
	11	15 600	129.45	110 900	1.2	750	**2KJ3412 - ■ KL33 - ■ ■ J1**	
	12	14 100	117.27	110 900	1.3	750	**2KJ3412 - ■ KL33 - ■ ■ H1**	
	14	12 700	105.48	110 900	1.5	750	**2KJ3412 - ■ KL33 - ■ ■ G1**	
	17	10 500	87.65	110 900	1.8	750	**2KJ3412 - ■ KL33 - ■ ■ F1**	
	19	9 390	77.92	110 900	2.0	750	**2KJ3412 - ■ KL33 - ■ ■ E1**	
	FD.169-LES180MQ4P							
	10	16 900	140.77	73 500	0.8	538	**2KJ3411 - ■ KL33 - ■ ■ L1**	
	12	15 100	125.49	73 500	0.9	538	**2KJ3411 - ■ KL33 - ■ ■ K1**	
	13	13 400	111.30	73 500	1.0	538	**2KJ3411 - ■ KL33 - ■ ■ J1**	
	14	12 300	102.18	73 500	1.1	538	**2KJ3411 - ■ KL33 - ■ ■ H1**	
	16	10 800	90.03	73 500	1.3	538	**2KJ3411 - ■ KL33 - ■ ■ G1**	
	20	8 900	73.85	73 500	1.5	538	**2KJ3411 - ■ KL33 - ■ ■ F1**	
	23	7 800	64.75	73 500	1.7	538	**2KJ3411 - ■ KL33 - ■ ■ E1**	
	29	6 100	50.63	73 500	2.2	538	**2KJ3411 - ■ KL33 - ■ ■ D1**	
	31	5 610	46.55	73 500	2.4	538	**2KJ3411 - ■ KL33 - ■ ■ C1**	
	FD.149-LES180MQ4P							
	19	9 520	78.98	48 600	0.84	397	**2KJ3410 - ■ KL33 - ■ ■ G1**	
	21	8 290	68.76	48 700	0.96	397	**2KJ3410 - ■ KL33 - ■ ■ F1**	
	26	6 790	56.37	48 500	1.2	397	**2KJ3410 - ■ KL33 - ■ ■ E1**	
	29	6 030	50.01	48 100	1.3	397	**2KJ3410 - ■ KL33 - ■ ■ D1**	
	32	5 460	45.30	47 600	1.5	397	**2KJ3410 - ■ KL33 - ■ ■ C1**	
	37	4 750	39.43	46 900	1.7	397	**2KJ3410 - ■ KL33 - ■ ■ B1**	
	45	3 890	32.33	45 700	1.9	397	**2KJ3410 - ■ KL33 - ■ ■ A1**	
	FZ.149-LES180MQ4P							
	42	4 210	34.93	46 200	1.9	416	**2KJ3310 - ■ KL33 - ■ ■ Q1**	
	47	3 750	31.11	45 400	2.1	416	**2KJ3310 - ■ KL33 - ■ ■ P1**	
	52	3 360	27.94	44 600	2.4	416	**2KJ3310 - ■ KL33 - ■ ■ N1**	
	59	3 000	24.93	43 700	2.7	416	**2KJ3310 - ■ KL33 - ■ ■ M1**	
	66	2 680	22.22	42 800	3.0	416	**2KJ3310 - ■ KL33 - ■ ■ L1**	
	FZ.129-LES180MQ4P							
	50	3 510	29.13	32 200	1.4	328	**2KJ3308 - ■ KL33 - ■ ■ Q1**	
	56	3 120	25.93	31 800	1.6	328	**2KJ3308 - ■ KL33 - ■ ■ P1**	
	63	2 800	23.23	31 400	1.7	328	**2KJ3308 - ■ KL33 - ■ ■ N1**	
	71	2 480	20.60	30 900	2.0	328	**2KJ3308 - ■ KL33 - ■ ■ M1**	
	81	2 190	18.18	30 300	2.2	328	**2KJ3308 - ■ KL33 - ■ ■ L1**	
	92	1 920	15.99	29 700	2.5	328	**2KJ3308 - ■ KL33 - ■ ■ K1**	
	101	1 740	14.48	29 200	2.7	328	**2KJ3308 - ■ KL33 - ■ ■ J1**	
	116	1 520	12.61	28 400	3.0	328	**2KJ3308 - ■ KL33 - ■ ■ H1**	
	142	1 240	10.34	27 300	3.5	328	**2KJ3308 - ■ KL33 - ■ ■ G1**	
	149	1 180	9.80	26 700	3.1	328	**2KJ3308 - ■ KL33 - ■ ■ F1**	
	169	1 040	8.65	26 000	3.5	328	**2KJ3308 - ■ KL33 - ■ ■ E1**	
	193	915	7.60	25 300	3.9	328	**2KJ3308 - ■ KL33 - ■ ■ D1**	
	213	830	6.89	24 700	4.4	328	**2KJ3308 - ■ KL33 - ■ ■ C1**	
	FZ.109-LES180MQ4P							
	59	2 990	24.82	21 500	1.0	277	**2KJ3307 - ■ KL33 - ■ ■ P1**	
	68	2 610	21.70	21 500	1.2	277	**2KJ3307 - ■ KL33 - ■ ■ N1**	

Article No. supplement		
Shaft design	**1, 5 or 9**	➞ page 10/44
Frequency and voltage	**2 or 9**	➞ page 11/2
Gearbox mounting type	**A, D, F or H**	➞ page 10/37

© Siemens AG 2017

4

Selection and ordering data (continued)

P_{rated} kW	n_2 rpm	T_2 Nm	i -	F_{R2} N	f_B -	m kg	Article No. (Article No. supplement ➞ below)	Order code No. of poles
18.5	**FZ.109-LES180MQ4P**							
	76	2 330	19.36	21 400	1.3	277	**2KJ3307 - ■ KL33 - ■ ■ M1**	
	86	2 050	17.06	21 200	1.5	277	**2KJ3307 - ■ KL33 - ■ ■ L1**	
	98	1 800	14.95	20 900	1.7	277	**2KJ3307 - ■ KL33 - ■ ■ K1**	
	112	1 570	13.03	20 600	2.0	277	**2KJ3307 - ■ KL33 - ■ ■ J1**	
	123	1 430	11.89	20 400	2.1	277	**2KJ3307 - ■ KL33 - ■ ■ H1**	
	143	1 230	10.23	19 900	2.3	277	**2KJ3307 - ■ KL33 - ■ ■ G1**	
	162	1 080	9.02	19 400	1.9	277	**2KJ3307 - ■ KL33 - ■ ■ F1**	
	185	955	7.94	19 000	2.1	277	**2KJ3307 - ■ KL33 - ■ ■ E1**	
	210	835	6.96	18 500	2.3	277	**2KJ3307 - ■ KL33 - ■ ■ D1**	
	241	730	6.07	18 000	2.5	277	**2KJ3307 - ■ KL33 - ■ ■ C1**	
	264	665	5.54	17 700	2.6	277	**2KJ3307 - ■ KL33 - ■ ■ B1**	
	307	575	4.77	17 100	2.8	277	**2KJ3307 - ■ KL33 - ■ ■ A1**	
	FZ.89-LES180MQ4P							
	87	2 030	16.86	15 600	0.91	238	**2KJ3306 - ■ KL33 - ■ ■ M1**	
	98	1 790	14.90	15 700	1.0	238	**2KJ3306 - ■ KL33 - ■ ■ L1**	
	112	1 570	13.07	15 700	1.2	238	**2KJ3306 - ■ KL33 - ■ ■ K1**	
	129	1 370	11.38	15 600	1.3	238	**2KJ3306 - ■ KL33 - ■ ■ J1**	
	151	1 170	9.73	15 500	1.6	238	**2KJ3306 - ■ KL33 - ■ ■ H1**	
	176	1 000	8.33	15 300	1.7	238	**2KJ3306 - ■ KL33 - ■ ■ G1**	
	193	915	7.60	14 900	1.2	238	**2KJ3306 - ■ KL33 - ■ ■ F1**	
	218	810	6.72	14 600	1.4	238	**2KJ3306 - ■ KL33 - ■ ■ E1**	
	248	710	5.90	14 400	1.6	238	**2KJ3306 - ■ KL33 - ■ ■ D1**	
	286	615	5.13	14 100	1.8	238	**2KJ3306 - ■ KL33 - ■ ■ C1**	
	334	525	4.39	13 700	2.0	238	**2KJ3306 - ■ KL33 - ■ ■ B1**	
	390	450	3.76	13 300	2.2	238	**2KJ3306 - ■ KL33 - ■ ■ A1**	
22	**FD.189-LES180ZLN4P**							
	8.9	23 500	164.61	110 000	0.81	755	**2KJ3412 - ■ KN33 - ■ ■ L1**	
	10	20 700	145.28	110 900	0.92	755	**2KJ3412 - ■ KN33 - ■ ■ K1**	
	11	18 500	129.45	110 900	1.0	755	**2KJ3412 - ■ KN33 - ■ ■ J1**	
	13	16 700	117.27	110 900	1.1	755	**2KJ3412 - ■ KN33 - ■ ■ H1**	
	14	15 000	105.48	110 900	1.3	755	**2KJ3412 - ■ KN33 - ■ ■ G1**	
	17	12 500	87.65	110 900	1.5	755	**2KJ3412 - ■ KN33 - ■ ■ F1**	
	19	11 100	77.92	110 900	1.7	755	**2KJ3412 - ■ KN33 - ■ ■ E1**	
	24	8 870	62.11	110 900	2.1	755	**2KJ3412 - ■ KN33 - ■ ■ D1**	
	FD.169-LES180ZLN4P							
	13	15 900	111.30	73 500	0.85	543	**2KJ3411 - ■ KN33 - ■ ■ J1**	
	14	14 600	102.18	73 500	0.93	543	**2KJ3411 - ■ KN33 - ■ ■ H1**	
	16	12 800	90.03	73 500	1.1	543	**2KJ3411 - ■ KN33 - ■ ■ G1**	
	20	10 500	73.85	73 500	1.3	543	**2KJ3411 - ■ KN33 - ■ ■ F1**	
	23	9 250	64.75	73 500	1.5	543	**2KJ3411 - ■ KN33 - ■ ■ E1**	
	29	7 230	50.63	73 500	1.9	543	**2KJ3411 - ■ KN33 - ■ ■ D1**	
	32	6 650	46.55	72 600	2.0	543	**2KJ3411 - ■ KN33 - ■ ■ C1**	
	36	5 830	40.82	71 000	2.3	543	**2KJ3411 - ■ KN33 - ■ ■ B1**	
	FZ.169-LES180ZLN4P							
	36	5 870	41.07	71 100	2.3	555	**2KJ3311 - ■ KN33 - ■ ■ R1**	
	40	5 280	36.94	69 700	2.6	555	**2KJ3311 - ■ KN33 - ■ ■ Q1**	
	FD.149-LES180ZLN4P							
	21	9 820	68.76	44 800	0.81	402	**2KJ3410 - ■ KN33 - ■ ■ F1**	
	26	8 050	56.37	45 300	0.99	402	**2KJ3410 - ■ KN33 - ■ ■ E1**	

Article No. supplement		
Shaft design	**1, 5 or 9**	➞ page 10/44
Frequency and voltage	**2 or 9**	➞ page 11/2
Gearbox mounting type	**A, D, F or H**	➞ page 10/37

© Siemens AG 2017

Selection and ordering data (continued)

P_{rated}	n_2	T_2	i	F_{R2}	f_B	m	Article No.	Order code
kW	rpm	Nm	-	N	-	kg	(Article No. supplement ➞ below)	No. of poles
22	**FD.149-LES180ZLN4P**							
	29	7 140	50.01	45 200	1.1	402	**2KJ3410 - ■ KN33 - ■ ■ D1**	
	32	6 470	45.30	45 100	1.2	402	**2KJ3410 - ■ KN33 - ■ ■ C1**	
	37	5 630	39.43	44 700	1.4	402	**2KJ3410 - ■ KN33 - ■ ■ B1**	
	45	4 620	32.33	43 800	1.6	402	**2KJ3410 - ■ KN33 - ■ ■ A1**	
	FZ.149-LES180ZLN4P							
	42	4 990	34.93	44 200	1.6	421	**2KJ3310 - ■ KN33 - ■ ■ Q1**	
	47	4 440	31.11	43 600	1.8	421	**2KJ3310 - ■ KN33 - ■ ■ P1**	
	53	3 990	27.94	43 000	2.0	421	**2KJ3310 - ■ KN33 - ■ ■ N1**	
	59	3 560	24.93	42 300	2.2	421	**2KJ3310 - ■ KN33 - ■ ■ M1**	
	66	3 170	22.22	41 500	2.5	421	**2KJ3310 - ■ KN33 - ■ ■ L1**	
	75	2 810	19.71	40 700	2.8	421	**2KJ3310 - ■ KN33 - ■ ■ K1**	
	81	2 580	18.10	40 000	3.1	421	**2KJ3310 - ■ KN33 - ■ ■ J1**	
	FZ.129-LES180ZLN4P							
	50	4 160	29.13	30 300	1.2	333	**2KJ3308 - ■ KN33 - ■ ■ Q1**	
	57	3 700	25.93	30 200	1.3	333	**2KJ3308 - ■ KN33 - ■ ■ P1**	
	63	3 320	23.23	29 900	1.5	333	**2KJ3308 - ■ KN33 - ■ ■ N1**	
	71	2 940	20.60	29 600	1.6	333	**2KJ3308 - ■ KN33 - ■ ■ M1**	
	81	2 590	18.18	29 200	1.9	333	**2KJ3308 - ■ KN33 - ■ ■ L1**	
	92	2 280	15.99	28 700	2.1	333	**2KJ3308 - ■ KN33 - ■ ■ K1**	
	102	2 070	14.48	28 200	2.3	333	**2KJ3308 - ■ KN33 - ■ ■ J1**	
	117	1 800	12.61	27 600	2.5	333	**2KJ3308 - ■ KN33 - ■ ■ H1**	
	142	1 470	10.34	26 600	2.9	333	**2KJ3308 - ■ KN33 - ■ ■ G1**	
	150	1 400	9.80	26 000	2.6	333	**2KJ3308 - ■ KN33 - ■ ■ F1**	
	170	1 230	8.65	25 400	2.9	333	**2KJ3308 - ■ KN33 - ■ ■ E1**	
	193	1 080	7.60	24 700	3.3	333	**2KJ3308 - ■ KN33 - ■ ■ D1**	
	213	985	6.89	24 200	3.7	333	**2KJ3308 - ■ KN33 - ■ ■ C1**	
	245	855	6.00	23 500	4.2	333	**2KJ3308 - ■ KN33 - ■ ■ B1**	
	299	700	4.92	22 400	4.3	333	**2KJ3308 - ■ KN33 - ■ ■ A1**	
	FZ.109-LES180ZLN4P							
	59	3 540	24.82	19 600	0.87	282	**2KJ3307 - ■ KN33 - ■ ■ P1**	
	68	3 100	21.70	19 800	1.0	282	**2KJ3307 - ■ KN33 - ■ ■ N1**	
	76	2 760	19.36	19 900	1.1	282	**2KJ3307 - ■ KN33 - ■ ■ M1**	
	86	2 430	17.06	19 900	1.3	282	**2KJ3307 - ■ KN33 - ■ ■ L1**	
	98	2 130	14.95	19 800	1.5	282	**2KJ3307 - ■ KN33 - ■ ■ K1**	
	113	1 860	13.03	19 600	1.7	282	**2KJ3307 - ■ KN33 - ■ ■ J1**	
	124	1 690	11.89	19 500	1.8	282	**2KJ3307 - ■ KN33 - ■ ■ H1**	
	144	1 460	10.23	19 100	2.0	282	**2KJ3307 - ■ KN33 - ■ ■ G1**	
	163	1 280	9.02	18 700	1.6	282	**2KJ3307 - ■ KN33 - ■ ■ F1**	
	185	1 130	7.94	18 400	1.8	282	**2KJ3307 - ■ KN33 - ■ ■ E1**	
	211	995	6.96	18 000	1.9	282	**2KJ3307 - ■ KN33 - ■ ■ D1**	
	242	865	6.07	17 500	2.1	282	**2KJ3307 - ■ KN33 - ■ ■ C1**	
	265	790	5.54	17 200	2.2	282	**2KJ3307 - ■ KN33 - ■ ■ B1**	
	308	680	4.77	16 700	2.4	282	**2KJ3307 - ■ KN33 - ■ ■ A1**	
	FZ.89-LES180ZLN4P							
	99	2 130	14.90	14 300	0.87	243	**2KJ3306 - ■ KN33 - ■ ■ L1**	
	112	1 860	13.07	14 500	0.99	243	**2KJ3306 - ■ KN33 - ■ ■ K1**	
	129	1 620	11.38	14 600	1.1	243	**2KJ3306 - ■ KN33 - ■ ■ J1**	
	151	1 390	9.73	14 600	1.3	243	**2KJ3306 - ■ KN33 - ■ ■ H1**	

Article No. supplement		
Shaft design	**1, 5 or 9**	➞ page 10/44
Frequency and voltage	**2 or 9**	➞ page 11/2
Gearbox mounting type	**A, D, F or H**	➞ page 10/37

© Siemens AG 2017

4

Selection and ordering data (continued)

P_{rated} kW	n_2 rpm	T_2 Nm	i -	F_{R2} N	f_B -	m kg	Article No. (Article No. supplement ➞ below)	Order code No. of poles
22	**FZ.89-LES180ZLN4P**							
	176	1 190	8.33	14 500	1.5	243	**2KJ3306 - ■ KN33 - ■ ■ G1**	
	193	1 080	7.60	14 100	1.0	243	**2KJ3306 - ■ KN33 - ■ ■ F1**	
	219	960	6.72	14 000	1.2	243	**2KJ3306 - ■ KN33 - ■ ■ E1**	
	249	840	5.90	13 800	1.3	243	**2KJ3306 - ■ KN33 - ■ ■ D1**	
	287	730	5.13	13 600	1.5	243	**2KJ3306 - ■ KN33 - ■ ■ C1**	
	335	625	4.39	13 200	1.7	243	**2KJ3306 - ■ KN33 - ■ ■ B1**	
	391	535	3.76	12 900	1.8	243	**2KJ3306 - ■ KN33 - ■ ■ A1**	
30	**FD.189-LES200ZLU4P**							
	13	22 800	117.27	110 400	0.83	825	**2KJ3412 - ■ LN33 - ■ ■ H1**	
	14	20 500	105.48	110 900	0.92	825	**2KJ3412 - ■ LN33 - ■ ■ G1**	
	17	17 000	87.65	110 900	1.1	825	**2KJ3412 - ■ LN33 - ■ ■ F1**	
	19	15 100	77.92	110 200	1.3	825	**2KJ3412 - ■ LN33 - ■ ■ E1**	
	24	12 100	62.11	106 800	1.6	825	**2KJ3412 - ■ LN33 - ■ ■ D1**	
	30	9 630	49.43	102 900	2.0	825	**2KJ3412 - ■ LN33 - ■ ■ C1**	
	36	7 910	40.61	99 200	2.4	825	**2KJ3412 - ■ LN33 - ■ ■ B1**	
	FZ.189-LES200ZLU4P							
	39	7 390	37.93	97 900	2.6	830	**2KJ3312 - ■ LN33 - ■ ■ L1**	
	FD.169-LES200ZLU4P							
	20	14 300	73.85	69 500	0.94	613	**2KJ3411 - ■ LN33 - ■ ■ F1**	
	23	12 600	64.75	69 200	1.1	613	**2KJ3411 - ■ LN33 - ■ ■ E1**	
	29	9 860	50.63	68 100	1.4	613	**2KJ3411 - ■ LN33 - ■ ■ D1**	
	32	9 070	46.55	67 600	1.5	613	**2KJ3411 - ■ LN33 - ■ ■ C1**	
	36	7 950	40.82	66 600	1.7	613	**2KJ3411 - ■ LN33 - ■ ■ B1**	
	46	6 220	31.92	64 300	2.2	613	**2KJ3411 - ■ LN33 - ■ ■ A1**	
	FZ.169-LES200ZLU4P							
	40	7 200	36.94	65 700	1.9	631	**2KJ3311 - ■ LN33 - ■ ■ Q1**	
	45	6 430	33.02	64 600	2.1	631	**2KJ3311 - ■ LN33 - ■ ■ P1**	
	49	5 820	29.86	63 600	2.3	631	**2KJ3311 - ■ LN33 - ■ ■ N1**	
	56	5 130	26.35	62 200	2.6	631	**2KJ3311 - ■ LN33 - ■ ■ M1**	
	63	4 570	23.48	60 900	3.0	631	**2KJ3311 - ■ LN33 - ■ ■ L1**	
	FD.149-LES200ZLU4P							
	29	9 740	50.01	38 700	0.82	472	**2KJ3410 - ■ LN33 - ■ ■ D1**	
	32	8 820	45.30	39 200	0.91	472	**2KJ3410 - ■ LN33 - ■ ■ C1**	
	37	7 680	39.43	39 500	1.0	472	**2KJ3410 - ■ LN33 - ■ ■ B1**	
	45	6 300	32.33	39 600	1.2	472	**2KJ3410 - ■ LN33 - ■ ■ A1**	
	FZ.149-LES200ZLU4P							
	47	6 060	31.11	39 500	1.3	495	**2KJ3310 - ■ LN33 - ■ ■ P1**	
	53	5 440	27.94	39 400	1.5	495	**2KJ3310 - ■ LN33 - ■ ■ N1**	
	59	4 850	24.93	39 000	1.6	495	**2KJ3310 - ■ LN33 - ■ ■ M1**	
	66	4 330	22.22	38 600	1.8	495	**2KJ3310 - ■ LN33 - ■ ■ L1**	
	75	3 840	19.71	38 100	2.1	495	**2KJ3310 - ■ LN33 - ■ ■ K1**	
	81	3 520	18.10	37 700	2.3	495	**2KJ3310 - ■ LN33 - ■ ■ J1**	
	92	3 100	15.94	37 000	2.6	495	**2KJ3310 - ■ LN33 - ■ ■ H1**	
	112	2 540	13.08	35 800	3.0	495	**2KJ3310 - ■ LN33 - ■ ■ G1**	
	128	2 230	11.47	35 000	3.3	495	**2KJ3310 - ■ LN33 - ■ ■ F1**	
	164	1 740	8.97	33 300	3.9	495	**2KJ3310 - ■ LN33 - ■ ■ E1**	
	182	1 570	8.09	32 300	3.6	495	**2KJ3310 - ■ LN33 - ■ ■ D1**	
	221	1 290	6.64	31 000	4.4	495	**2KJ3310 - ■ LN33 - ■ ■ C1**	

Article No. supplement		
Shaft design	**1, 5 or 9**	➞ page 10/44
Frequency and voltage	**2 or 9**	➞ page 11/2
Gearbox mounting type	**A, D, F or H**	➞ page 10/37

© Siemens AG 2017

Selection and ordering data (continued)

P_{rated} kW	n_2 rpm	T_2 Nm	i -	F_{R2} N	f_B -	m kg	Article No. (Article No. supplement ➞ below)	Order code No. of poles
30	**FZ.129-LES200ZLU4P**							
	57	5 050	25.93	26 400	0.96	408	**2KJ3308 - ■ LN33 - ■ ■ P1**	
	63	4 520	23.23	26 600	1.1	408	**2KJ3308 - ■ LN33 - ■ ■ N1**	
	71	4 010	20.60	26 600	1.2	408	**2KJ3308 - ■ LN33 - ■ ■ M1**	
	81	3 540	18.18	26 500	1.4	408	**2KJ3308 - ■ LN33 - ■ ■ L1**	
	92	3 110	15.99	26 300	1.5	408	**2KJ3308 - ■ LN33 - ■ ■ K1**	
	102	2 820	14.48	26 100	1.7	408	**2KJ3308 - ■ LN33 - ■ ■ J1**	
	117	2 450	12.61	25 800	1.8	408	**2KJ3308 - ■ LN33 - ■ ■ H1**	
	142	2 010	10.34	25 100	2.1	408	**2KJ3308 - ■ LN33 - ■ ■ G1**	
	150	1 910	9.80	24 400	1.9	408	**2KJ3308 - ■ LN33 - ■ ■ F1**	
	170	1 680	8.65	24 000	2.2	408	**2KJ3308 - ■ LN33 - ■ ■ E1**	
	193	1 480	7.60	23 500	2.4	408	**2KJ3308 - ■ LN33 - ■ ■ D1**	
	213	1 340	6.89	23 100	2.7	408	**2KJ3308 - ■ LN33 - ■ ■ C1**	
	245	1 160	6.00	22 600	3.1	408	**2KJ3308 - ■ LN33 - ■ ■ B1**	
	299	955	4.92	21 700	3.2	408	**2KJ3308 - ■ LN33 - ■ ■ A1**	
	FZ.109-LES200ZLU4P							
	76	3 770	19.36	16 600	0.82	357	**2KJ3307 - ■ LN33 - ■ ■ M1**	
	86	3 320	17.06	17 000	0.93	357	**2KJ3307 - ■ LN33 - ■ ■ L1**	
	98	2 910	14.95	17 300	1.1	357	**2KJ3307 - ■ LN33 - ■ ■ K1**	
	113	2 540	13.03	17 400	1.2	357	**2KJ3307 - ■ LN33 - ■ ■ J1**	
	124	2 310	11.89	17 500	1.3	357	**2KJ3307 - ■ LN33 - ■ ■ H1**	
	144	1 990	10.23	17 400	1.4	357	**2KJ3307 - ■ LN33 - ■ ■ G1**	
	163	1 750	9.02	17 200	1.2	357	**2KJ3307 - ■ LN33 - ■ ■ F1**	
	185	1 540	7.94	17 000	1.3	357	**2KJ3307 - ■ LN33 - ■ ■ E1**	
	211	1 350	6.96	16 800	1.4	357	**2KJ3307 - ■ LN33 - ■ ■ D1**	
	242	1 180	6.07	16 500	1.5	357	**2KJ3307 - ■ LN33 - ■ ■ C1**	
	265	1 080	5.54	16 300	1.6	357	**2KJ3307 - ■ LN33 - ■ ■ B1**	
	308	930	4.77	15 900	1.7	357	**2KJ3307 - ■ LN33 - ■ ■ A1**	
37	**FD.189-LES225SD4P**							
	17	20 900	87.65	103 900	0.91	901	**2KJ3412 - ■ MF33 - ■ ■ F1**	
	19	18 600	77.92	103 300	1.0	901	**2KJ3412 - ■ MF33 - ■ ■ E1**	
	24	14 800	62.11	101 400	1.3	901	**2KJ3412 - ■ MF33 - ■ ■ D1**	
	30	11 800	49.43	98 600	1.6	901	**2KJ3412 - ■ MF33 - ■ ■ C1**	
	36	9 700	40.61	95 600	2.0	901	**2KJ3412 - ■ MF33 - ■ ■ B1**	
	46	7 720	32.32	91 800	2.5	901	**2KJ3412 - ■ MF33 - ■ ■ A1**	
	FZ.189-LES225SD4P							
	39	9 060	37.93	94 500	2.1	873	**2KJ3312 - ■ MF33 - ■ ■ L1**	
	43	8 130	34.03	92 700	2.3	873	**2KJ3312 - ■ MF33 - ■ ■ K1**	
	49	7 270	30.41	90 800	2.6	873	**2KJ3312 - ■ MF33 - ■ ■ J1**	
	54	6 490	27.17	88 800	2.9	873	**2KJ3312 - ■ MF33 - ■ ■ H1**	
	FD.169-LES225SD4P							
	23	15 400	64.75	63 200	0.88	689	**2KJ3411 - ■ MF33 - ■ ■ E1**	
	29	12 100	50.63	63 300	1.1	689	**2KJ3411 - ■ MF33 - ■ ■ D1**	
	32	11 100	46.55	63 200	1.2	689	**2KJ3411 - ■ MF33 - ■ ■ C1**	
	36	9 750	40.82	62 700	1.4	689	**2KJ3411 - ■ MF33 - ■ ■ B1**	
	46	7 630	31.92	61 200	1.8	689	**2KJ3411 - ■ MF33 - ■ ■ A1**	
	FZ.169-LES225SD4P							
	45	7 890	33.02	61 400	1.7	674	**2KJ3311 - ■ MF33 - ■ ■ P1**	
	49	7 130	29.86	60 700	1.9	674	**2KJ3311 - ■ MF33 - ■ ■ N1**	
	56	6 300	26.35	59 700	2.2	674	**2KJ3311 - ■ MF33 - ■ ■ M1**	

Article No. supplement		
Shaft design	**1, 5 or 9**	➞ page 10/44
Frequency and voltage	**2 or 9**	➞ page 11/2
Gearbox mounting type	**A, D, F or H**	➞ page 10/37

© Siemens AG 2017

4

Selection and ordering data (continued)

P_{rated} kW	n_2 rpm	T_2 Nm	i -	F_{R2} N	f_B -	m kg	Article No. (Article No. supplement ➞ below)	Order code No. of poles
37	**FZ.169-LES225SD4P**							
	63	5 610	23.48	58 600	2.4	674	**2KJ3311 - ■ MF33 - ■ ■ L1**	
	69	5 080	21.27	57 700	2.7	674	**2KJ3311 - ■ MF33 - ■ ■ K1**	
	77	4 570	19.13	56 600	3.0	674	**2KJ3311 - ■ MF33 - ■ ■ J1**	
	183	1 920	8.07	46 200	4.3	674	**2KJ3311 - ■ MF33 - ■ ■ D1**	
	FD.149-LES225SD4P							
	37	9 420	39.43	35 100	0.85	545	**2KJ3410 - ■ MF33 - ■ ■ B1**	
	46	7 720	32.33	35 900	0.97	545	**2KJ3410 - ■ MF33 - ■ ■ A1**	
	FZ.149-LES225SD4P							
	53	6 680	27.94	36 200	1.2	540	**2KJ3310 - ■ MF33 - ■ ■ N1**	
	59	5 960	24.93	36 200	1.3	540	**2KJ3310 - ■ MF33 - ■ ■ M1**	
	67	5 310	22.22	36 100	1.5	540	**2KJ3310 - ■ MF33 - ■ ■ L1**	
	75	4 710	19.71	35 800	1.7	540	**2KJ3310 - ■ MF33 - ■ ■ K1**	
	82	4 320	18.10	35 600	1.8	540	**2KJ3310 - ■ MF33 - ■ ■ J1**	
	93	3 810	15.94	35 100	2.1	540	**2KJ3310 - ■ MF33 - ■ ■ H1**	
	113	3 120	13.08	34 300	2.4	540	**2KJ3310 - ■ MF33 - ■ ■ G1**	
	129	2 740	11.47	33 600	2.7	540	**2KJ3310 - ■ MF33 - ■ ■ F1**	
	165	2 140	8.97	32 200	3.2	540	**2KJ3310 - ■ MF33 - ■ ■ E1**	
	183	1 930	8.09	31 300	2.9	540	**2KJ3310 - ■ MF33 - ■ ■ D1**	
	223	1 580	6.64	30 100	3.6	540	**2KJ3310 - ■ MF33 - ■ ■ C1**	
	254	1 390	5.82	29 300	4.1	540	**2KJ3310 - ■ MF33 - ■ ■ B1**	
	FZ.129-LES225SD4P							
	64	5 550	23.23	23 600	0.87	451	**2KJ3308 - ■ MF33 - ■ ■ N1**	
	72	4 920	20.60	24 000	0.98	451	**2KJ3308 - ■ MF33 - ■ ■ M1**	
	81	4 340	18.18	24 200	1.1	451	**2KJ3308 - ■ MF33 - ■ ■ L1**	
	92	3 820	15.99	24 300	1.3	451	**2KJ3308 - ■ MF33 - ■ ■ K1**	
	102	3 460	14.48	24 300	1.4	451	**2KJ3308 - ■ MF33 - ■ ■ J1**	
	117	3 010	12.61	24 200	1.5	451	**2KJ3308 - ■ MF33 - ■ ■ H1**	
	143	2 470	10.34	23 800	1.7	451	**2KJ3308 - ■ MF33 - ■ ■ G1**	
	151	2 340	9.80	23 100	1.5	451	**2KJ3308 - ■ MF33 - ■ ■ F1**	
	171	2 060	8.65	22 800	1.8	451	**2KJ3308 - ■ MF33 - ■ ■ E1**	
	194	1 810	7.60	22 500	2.0	451	**2KJ3308 - ■ MF33 - ■ ■ D1**	
	215	1 640	6.89	22 200	2.2	451	**2KJ3308 - ■ MF33 - ■ ■ C1**	
	246	1 430	6.00	21 700	2.5	451	**2KJ3308 - ■ MF33 - ■ ■ B1**	
	300	1 170	4.92	21 000	2.6	451	**2KJ3308 - ■ MF33 - ■ ■ A1**	
	FZ.109-LES225SD4P							
	99	3 570	14.95	15 100	0.87	399	**2KJ3307 - ■ MF33 - ■ ■ K1**	
	113	3 110	13.03	15 500	1.0	399	**2KJ3307 - ■ MF33 - ■ ■ J1**	
	124	2 840	11.89	15 700	1.1	399	**2KJ3307 - ■ MF33 - ■ ■ H1**	
	144	2 440	10.23	15 900	1.2	399	**2KJ3307 - ■ MF33 - ■ ■ G1**	
	164	2 150	9.02	15 800	0.97	399	**2KJ3307 - ■ MF33 - ■ ■ F1**	
	186	1 890	7.94	15 800	1.1	399	**2KJ3307 - ■ MF33 - ■ ■ E1**	
	212	1 660	6.96	15 700	1.1	399	**2KJ3307 - ■ MF33 - ■ ■ D1**	
	243	1 450	6.07	15 500	1.2	399	**2KJ3307 - ■ MF33 - ■ ■ C1**	
	267	1 320	5.54	15 400	1.3	399	**2KJ3307 - ■ MF33 - ■ ■ B1**	
	310	1 140	4.77	15 200	1.4	399	**2KJ3307 - ■ MF33 - ■ ■ A1**	
45	**FD.189-LES225YMF4P**							
	19	22 600	77.92	95 700	0.84	946	**2KJ3412 - ■ MT33 - ■ ■ E1**	
	24	18 000	62.11	95 300	1.1	946	**2KJ3412 - ■ MT33 - ■ ■ D1**	
	30	14 300	49.43	93 800	1.3	946	**2KJ3412 - ■ MT33 - ■ ■ C1**	

Article No. supplement		
Shaft design	**1, 5 or 9**	➞ page 10/44
Frequency and voltage	**2 or 9**	➞ page 11/2
Gearbox mounting type	**A, D, F or H**	➞ page 10/37

© Siemens AG 2017

Selection and ordering data (continued)

P_{rated}	n_2	T_2	i	F_{R2}	f_B	m	Article No.	Order code
kW	rpm	Nm	-	N	-	kg	(Article No. supplement ➞ below)	No. of poles
45	**FD.189-LES225YMF4P**							
	36	11 800	40.61	91 600	1.6	946	**2KJ3412 - ■ MT33 - ■ ■ B1**	
	46	9 390	32.32	88 700	2.0	946	**2KJ3412 - ■ MT33 - ■ ■ A1**	
	FZ.189-LES225YMF4P							
	39	11 000	37.93	90 800	1.7	918	**2KJ3312 - ■ MT33 - ■ ■ L1**	
	43	9 890	34.03	89 400	1.9	918	**2KJ3312 - ■ MT33 - ■ ■ K1**	
	49	8 840	30.41	87 800	2.1	918	**2KJ3312 - ■ MT33 - ■ ■ J1**	
	54	7 900	27.17	86 100	2.4	918	**2KJ3312 - ■ MT33 - ■ ■ H1**	
	59	7 220	24.85	84 700	2.6	918	**2KJ3312 - ■ MT33 - ■ ■ G1**	
	67	6 420	22.09	82 800	3.0	918	**2KJ3312 - ■ MT33 - ■ ■ F1**	
	FD.169-LES225YMF4P							
	29	14 700	50.63	57 800	0.92	734	**2KJ3411 - ■ MT33 - ■ ■ D1**	
	32	13 500	46.55	58 100	1.0	734	**2KJ3411 - ■ MT33 - ■ ■ C1**	
	36	11 800	40.82	58 400	1.1	734	**2KJ3411 - ■ MT33 - ■ ■ B1**	
	46	9 280	31.92	57 700	1.5	734	**2KJ3411 - ■ MT33 - ■ ■ A1**	
	FZ.169-LES225YMF4P							
	45	9 600	33.02	57 800	1.4	719	**2KJ3311 - ■ MT33 - ■ ■ P1**	
	49	8 680	29.86	57 500	1.6	719	**2KJ3311 - ■ MT33 - ■ ■ N1**	
	56	7 660	26.35	56 800	1.8	719	**2KJ3311 - ■ MT33 - ■ ■ M1**	
	63	6 820	23.48	56 100	2.0	719	**2KJ3311 - ■ MT33 - ■ ■ L1**	
	69	6 180	21.27	55 400	2.2	719	**2KJ3311 - ■ MT33 - ■ ■ K1**	
	77	5 560	19.13	54 500	2.4	719	**2KJ3311 - ■ MT33 - ■ ■ J1**	
	93	4 620	15.90	52 900	2.9	719	**2KJ3311 - ■ MT33 - ■ ■ H1**	
	105	4 100	14.13	51 800	3.1	719	**2KJ3311 - ■ MT33 - ■ ■ G1**	
	131	3 270	11.26	49 600	3.6	719	**2KJ3311 - ■ MT33 - ■ ■ F1**	
	165	2 600	8.97	47 300	4.0	719	**2KJ3311 - ■ MT33 - ■ ■ E1**	
	183	2 340	8.07	45 200	3.6	719	**2KJ3311 - ■ MT33 - ■ ■ D1**	
	206	2 080	7.18	44 100	4.0	719	**2KJ3311 - ■ MT33 - ■ ■ C1**	
	FD.149-LES225YMF4P							
	46	9 400	32.33	31 700	0.80	590	**2KJ3410 - ■ MT33 - ■ ■ A1**	
	FZ.149-LES225YMF4P							
	53	8 120	27.94	32 600	0.98	585	**2KJ3310 - ■ MT33 - ■ ■ N1**	
	59	7 240	24.93	33 000	1.1	585	**2KJ3310 - ■ MT33 - ■ ■ M1**	
	67	6 460	22.22	33 200	1.2	585	**2KJ3310 - ■ MT33 - ■ ■ L1**	
	75	5 730	19.71	33 300	1.4	585	**2KJ3310 - ■ MT33 - ■ ■ K1**	
	82	5 260	18.10	33 300	1.5	585	**2KJ3310 - ■ MT33 - ■ ■ J1**	
	93	4 630	15.94	33 100	1.7	585	**2KJ3310 - ■ MT33 - ■ ■ H1**	
	113	3 800	13.08	32 600	2.0	585	**2KJ3310 - ■ MT33 - ■ ■ G1**	
	129	3 330	11.47	32 100	2.2	585	**2KJ3310 - ■ MT33 - ■ ■ F1**	
	165	2 600	8.97	31 100	2.6	585	**2KJ3310 - ■ MT33 - ■ ■ E1**	
	183	2 350	8.09	30 200	2.4	585	**2KJ3310 - ■ MT33 - ■ ■ D1**	
	223	1 930	6.64	29 200	2.9	585	**2KJ3310 - ■ MT33 - ■ ■ C1**	
	254	1 690	5.82	28 500	3.4	585	**2KJ3310 - ■ MT33 - ■ ■ B1**	
	325	1 320	4.55	27 100	4.3	585	**2KJ3310 - ■ MT33 - ■ ■ A1**	
	FZ.129-LES225YMF4P							
	72	5 990	20.60	21 000	0.81	496	**2KJ3308 - ■ MT33 - ■ ■ M1**	
	81	5 280	18.18	21 600	0.92	496	**2KJ3308 - ■ MT33 - ■ ■ L1**	
	92	4 640	15.99	22 000	1.0	496	**2KJ3308 - ■ MT33 - ■ ■ K1**	
	102	4 210	14.48	22 200	1.1	496	**2KJ3308 - ■ MT33 - ■ ■ J1**	
	117	3 660	12.61	22 300	1.2	496	**2KJ3308 - ■ MT33 - ■ ■ H1**	

Article No. supplement		
Shaft design	**1, 5 or 9**	➞ page 10/44
Frequency and voltage	**2 or 9**	➞ page 11/2
Gearbox mounting type	**A, D, F or H**	➞ page 10/37

© Siemens AG 2017

4

Selection and ordering data (continued)

P_{rated} kW	n_2 rpm	T_2 Nm	i -	F_{R2} N	f_B -	m kg	Article No. (Article No. supplement ➞ below)	Order code No. of poles
45	**FZ.129-LES225YMF4P**							
	143	3 000	10.34	22 300	1.4	496	**2KJ3308 - ■ MT33 - ■ ■ G1**	
	151	2 840	9.80	21 600	1.3	496	**2KJ3308 - ■ MT33 - ■ ■ F1**	
	171	2 510	8.65	21 400	1.4	496	**2KJ3308 - ■ MT33 - ■ ■ E1**	
	194	2 210	7.60	21 300	1.6	496	**2KJ3308 - ■ MT33 - ■ ■ D1**	
	215	2 000	6.89	21 100	1.8	496	**2KJ3308 - ■ MT33 - ■ ■ C1**	
	246	1 740	6.00	20 800	2.1	496	**2KJ3308 - ■ MT33 - ■ ■ B1**	
	300	1 430	4.92	20 200	2.1	496	**2KJ3308 - ■ MT33 - ■ ■ A1**	
	FZ.109-LES225YMF4P							
	113	3 780	13.03	13 300	0.82	444	**2KJ3307 - ■ MT33 - ■ ■ J1**	
	124	3 450	11.89	13 700	0.89	444	**2KJ3307 - ■ MT33 - ■ ■ H1**	
	144	2 970	10.23	14 200	0.97	444	**2KJ3307 - ■ MT33 - ■ ■ G1**	
	164	2 620	9.02	14 200	0.80	444	**2KJ3307 - ■ MT33 - ■ ■ F1**	
	186	2 300	7.94	14 400	0.87	444	**2KJ3307 - ■ MT33 - ■ ■ E1**	
	212	2 020	6.96	14 500	0.94	444	**2KJ3307 - ■ MT33 - ■ ■ D1**	
	243	1 760	6.07	14 500	1.0	444	**2KJ3307 - ■ MT33 - ■ ■ C1**	
	267	1 610	5.54	14 500	1.1	444	**2KJ3307 - ■ MT33 - ■ ■ B1**	
	310	1 380	4.77	14 300	1.2	444	**2KJ3307 - ■ MT33 - ■ ■ A1**	
55	**FD.189-LES250MD4P**							
	24	22 100	62.11	87 700	0.86	1 049	**2KJ3412 - ■ NM33 - ■ ■ D1**	
	30	17 600	49.43	87 700	1.1	1 049	**2KJ3412 - ■ NM33 - ■ ■ C1**	
	36	14 500	40.61	86 700	1.3	1 049	**2KJ3412 - ■ NM33 - ■ ■ B1**	
	45	11 500	32.32	84 800	1.6	1 049	**2KJ3412 - ■ NM33 - ■ ■ A1**	
	FZ.189-LES250MD4P							
	48	10 800	30.41	84 200	1.7	1 021	**2KJ3312 - ■ NM33 - ■ ■ J1**	
	54	9 700	27.17	82 800	2.0	1 021	**2KJ3312 - ■ NM33 - ■ ■ H1**	
	59	8 870	24.85	81 700	2.1	1 021	**2KJ3312 - ■ NM33 - ■ ■ G1**	
	67	7 890	22.09	80 200	2.4	1 021	**2KJ3312 - ■ NM33 - ■ ■ F1**	
	78	6 700	18.75	77 900	2.8	1 021	**2KJ3312 - ■ NM33 - ■ ■ E1**	
	91	5 790	16.21	75 700	3.3	1 021	**2KJ3312 - ■ NM33 - ■ ■ D1**	
	FD.169-LES250MD4P							
	32	16 600	46.55	51 800	0.82	838	**2KJ3411 - ■ NM33 - ■ ■ C1**	
	36	14 500	40.82	52 800	0.93	838	**2KJ3411 - ■ NM33 - ■ ■ B1**	
	46	11 400	31.92	53 400	1.2	838	**2KJ3411 - ■ NM33 - ■ ■ A1**	
	FZ.169-LES250MD4P							
	56	9 410	26.35	53 300	1.4	822	**2KJ3311 - ■ NM33 - ■ ■ M1**	
	63	8 390	23.48	52 900	1.6	822	**2KJ3311 - ■ NM33 - ■ ■ L1**	
	69	7 600	21.27	52 500	1.8	822	**2KJ3311 - ■ NM33 - ■ ■ K1**	
	77	6 830	19.13	52 000	2.0	822	**2KJ3311 - ■ NM33 - ■ ■ J1**	
	92	5 680	15.90	50 800	2.4	822	**2KJ3311 - ■ NM33 - ■ ■ H1**	
	104	5 040	14.13	50 000	2.6	822	**2KJ3311 - ■ NM33 - ■ ■ G1**	
	131	4 020	11.26	48 100	2.9	822	**2KJ3311 - ■ NM33 - ■ ■ F1**	
	164	3 200	8.97	46 100	3.2	822	**2KJ3311 - ■ NM33 - ■ ■ E1**	
	182	2 880	8.07	43 900	2.9	822	**2KJ3311 - ■ NM33 - ■ ■ D1**	
	205	2 560	7.18	42 900	3.2	822	**2KJ3311 - ■ NM33 - ■ ■ C1**	
	257	2 040	5.72	41 000	4.0	822	**2KJ3311 - ■ NM33 - ■ ■ B1**	
	323	1 620	4.55	39 000	4.5	822	**2KJ3311 - ■ NM33 - ■ ■ A1**	
	FZ.149-LES250MD4P							
	66	7 930	22.22	29 600	1.0	687	**2KJ3310 - ■ NM33 - ■ ■ L1**	
	75	7 040	19.71	30 100	1.1	687	**2KJ3310 - ■ NM33 - ■ ■ K1**	

Article No. supplement		
Shaft design	**1, 5 or 9**	➞ page 10/44
Frequency and voltage	**2 or 9**	➞ page 11/2
Gearbox mounting type	**A, D, F or H**	➞ page 10/37

© Siemens AG 2017

Selection and ordering data (continued)

P_{rated}	n_2	T_2	i	F_{R2}	f_B	m	Article No.	Order code
kW	rpm	Nm	-	N	-	kg	(Article No. supplement ➞ below)	No. of poles
55	**FZ.149-LES250MD4P**							
	81	6 460	18.10	30 300	1.2	687	**2KJ3310 - ■ NM33 - ■ ■ J1**	
	92	5 690	15.94	30 500	1.4	687	**2KJ3310 - ■ NM33 - ■ ■ H1**	
	112	4 670	13.08	30 500	1.6	687	**2KJ3310 - ■ NM33 - ■ ■ G1**	
	128	4 090	11.47	30 300	1.8	687	**2KJ3310 - ■ NM33 - ■ ■ F1**	
	164	3 200	8.97	29 600	2.1	687	**2KJ3310 - ■ NM33 - ■ ■ E1**	
	182	2 890	8.09	28 800	2.0	687	**2KJ3310 - ■ NM33 - ■ ■ D1**	
	221	2 370	6.64	28 100	2.4	687	**2KJ3310 - ■ NM33 - ■ ■ C1**	
	253	2 080	5.82	27 500	2.7	687	**2KJ3310 - ■ NM33 - ■ ■ B1**	
	323	1 620	4.55	26 400	3.5	687	**2KJ3310 - ■ NM33 - ■ ■ A1**	
	FZ.129-LES250MD4P							
	92	5 710	15.99	19 100	0.84	598	**2KJ3308 - ■ NM33 - ■ ■ K1**	
	102	5 170	14.48	19 600	0.91	598	**2KJ3308 - ■ NM33 - ■ ■ J1**	
	117	4 500	12.61	20 100	1.0	598	**2KJ3308 - ■ NM33 - ■ ■ H1**	
	142	3 690	10.34	20 400	1.2	598	**2KJ3308 - ■ NM33 - ■ ■ G1**	
	170	3 090	8.65	19 700	1.2	598	**2KJ3308 - ■ NM33 - ■ ■ E1**	
	193	2 710	7.60	19 800	1.3	598	**2KJ3308 - ■ NM33 - ■ ■ D1**	
	213	2 460	6.89	19 700	1.5	598	**2KJ3308 - ■ NM33 - ■ ■ C1**	
	245	2 140	6.00	19 600	1.7	598	**2KJ3308 - ■ NM33 - ■ ■ B1**	
	299	1 750	4.92	19 300	1.7	598	**2KJ3308 - ■ NM33 - ■ ■ A1**	

Article No. supplement		
Shaft design	**1, 5 or 9**	➞ page 10/44
Frequency and voltage	**2 or 9**	➞ page 11/2
Gearbox mounting type	**A, D, F or H**	➞ page 10/37

© Siemens AG 2017

4

Selection and ordering data

i	n_2	T_{2N}	F_{R2}	φ [1]	J_G	R_{ex}	Motor frame size												Article No.
-	rpm	Nm	N	‘	10^{-4} kgm²	-	63	71	80	90	100	112	132	160	180	200	225	250	
FD.29																			
298.58	4.9	150	5 220	7.9	0.02	94054/315	✓	✓											**2KJ3401 - ■■■■■ - ■■ Q1**
264.39	5.5	150	5 220	8.0	0.03	92537/350	✓	✓	✓	✓									**2KJ3401 - ■■■■■ - ■■ P1**
229.72	6.3	150	5 220	8.0	0.04	80401/350	✓	✓	✓	✓									**2KJ3401 - ■■■■■ - ■■ N1**
208.83	6.9	150	5 220	8.0	0.05	80401/385	✓	✓	✓	✓									**2KJ3401 - ■■■■■ - ■■ M1**
177.71	8.2	150	5 220	8.0	0.06	62197/350	✓	✓	✓	✓									**2KJ3401 - ■■■■■ - ■■ L1**
161.55	9	150	5 220	8.0	0.08	62197/385	✓	✓	✓	✓									**2KJ3401 - ■■■■■ - ■■ K1**
140.86	10	150	5 220	8.0	0.09	19721/140	✓	✓	✓	✓	✓								**2KJ3401 - ■■■■■ - ■■ J1**
126.09	11	150	5 220	8.0	0.12	48544/385	✓	✓	✓	✓	✓								**2KJ3401 - ■■■■■ - ■■ H1**
111.97	13	150	5 220	8.0	0.14	47027/420	✓	✓	✓	✓	✓								**2KJ3401 - ■■■■■ - ■■ G1**
103.36	14	150	5 220	8.0	0.17	47027/455	✓	✓	✓	✓	✓								**2KJ3401 - ■■■■■ - ■■ F1**
89.78	16	150	5 220	8.1	0.19	43993/490	✓	✓	✓	✓	✓								**2KJ3401 - ■■■■■ - ■■ E1**
78.02	19	150	5 220	8.0	0.19	13653/175	✓	✓	✓	✓	✓								**2KJ3401 - ■■■■■ - ■■ D1**
70.43	21	150	5 220	8.1	0.25	19721/280	✓	✓	✓	✓	✓								**2KJ3401 - ■■■■■ - ■■ C1**
66.29	22	150	5 220	8.1	0.29	39442/595	✓	✓	✓	✓	✓								**2KJ3401 - ■■■■■ - ■■ B1**
57.79	25	150	5 220	8.1	0.33	6068/105	✓	✓	✓	✓	✓								**2KJ3401 - ■■■■■ - ■■ A1**
FZ.29																			
56.73	26	150	5 220	7.6	0.04	851/15	✓	✓											**2KJ3301 - ■■■■■ - ■■ C2**
50.32	29	150	5 220	8.0	0.05	1258/25	✓	✓	✓	✓									**2KJ3301 - ■■■■■ - ■■ B2**
43.66	33	150	5 220	8.0	0.06	2183/50	✓	✓	✓	✓									**2KJ3301 - ■■■■■ - ■■ A2**
39.69	37	150	5 220	8.0	0.08	2183/55	✓	✓	✓	✓									**2KJ3301 - ■■■■■ - ■■ X1**
34.04	43	150	4 910	8.1	0.10	851/25	✓	✓	✓	✓									**2KJ3301 - ■■■■■ - ■■ W1**
30.95	47	150	4 720	8.1	0.12	1702/55	✓	✓	✓	✓									**2KJ3301 - ■■■■■ - ■■ V1**
27.13	53	150	4 460	8.2	0.14	407/15	✓	✓	✓	✓	✓								**2KJ3301 - ■■■■■ - ■■ U1**
24.22	60	150	4 250	8.3	0.17	1332/55	✓	✓	✓	✓	✓								**2KJ3301 - ■■■■■ - ■■ T1**
21.58	67	150	4 040	8.4	0.20	259/12	✓	✓	✓	✓	✓								**2KJ3301 - ■■■■■ - ■■ S1**
19.92	73	150	3 910	8.4	0.24	259/13	✓	✓	✓	✓	✓								**2KJ3301 - ■■■■■ - ■■ R1**
17.44	83	150	3 680	8.6	0.28	1221/70	✓	✓	✓	✓	✓								**2KJ3301 - ■■■■■ - ■■ Q1**
15.29	95	150	3 470	8.8	0.30	1147/75	✓	✓	✓	✓	✓								**2KJ3301 - ■■■■■ - ■■ P1**
13.88	104	150	3 320	8.9	0.38	111/8	✓	✓	✓	✓	✓								**2KJ3301 - ■■■■■ - ■■ N1**
13.06	111	150	3 230	8.9	0.44	222/17	✓	✓	✓	✓	✓								**2KJ3301 - ■■■■■ - ■■ M1**
11.51	126	143	3 100	8.6	0.50	518/45	✓	✓	✓	✓	✓								**2KJ3301 - ■■■■■ - ■■ L1**
9.99	145	136	2 960	8.8	0.67	999/100	✓	✓	✓	✓	✓								**2KJ3301 - ■■■■■ - ■■ K1**
9.69	150	143	2 660	13.8	0.26	2664/275	✓	✓	✓	✓	✓								**2KJ3301 - ■■■■■ - ■■ J1**
8.63	168	130	2 640	14.0	0.32	259/30	✓	✓	✓	✓	✓								**2KJ3301 - ■■■■■ - ■■ H1**
7.97	182	120	2 630	14.0	0.38	518/65	✓	✓	✓	✓	✓								**2KJ3301 - ■■■■■ - ■■ G1**
6.98	208	123	2 440	14.5	0.46	1221/175	✓	✓	✓	✓	✓								**2KJ3301 - ■■■■■ - ■■ F1**
6.12	237	114	2 370	15.0	0.53	2294/375	✓	✓	✓	✓	✓								**2KJ3301 - ■■■■■ - ■■ E1**
5.55	261	108	2 320	15.3	0.66	111/20	✓	✓	✓	✓	✓								**2KJ3301 - ■■■■■ - ■■ D1**
5.22	278	106	2 300	15.3	0.76	444/85	✓	✓	✓	✓	✓								**2KJ3301 - ■■■■■ - ■■ C1**
4.60	315	97	2 280	15.3	0.92	1036/225	✓	✓	✓	✓	✓								**2KJ3301 - ■■■■■ - ■■ B1**
4.00	362	91	2 250	15.0	1.21	999/250	✓	✓	✓	✓	✓								**2KJ3301 - ■■■■■ - ■■ A1**

[1] Only in conjunction with reduced-backlash version

© Siemens AG 2017

Selection and ordering data (continued)

i	n_2	T_{2N}	F_{R2}	φ [1]	J_G	R_{ex}	Motor frame size												Article No.
-	rpm	Nm	N	‘	10^{-4} kgm²	-	63	71	80	90	100	112	132	160	180	200	225	250	
FD.39																			
274.26	5.3	290	5 820	6.9	0.04	32637/119	✓	✓											**2KJ3402 - ■■■■■ - ■■ R1**
243.26	6	290	5 820	7.0	0.05	8514/35	✓	✓	✓	✓									**2KJ3402 - ■■■■■ - ■■ Q1**
211.06	6.9	290	5 820	7.0	0.06	251163/1190	✓	✓	✓	✓									**2KJ3402 - ■■■■■ - ■■ P1**
191.87	7.6	290	5 820	7.0	0.07	22833/119	✓	✓	✓	✓									**2KJ3402 - ■■■■■ - ■■ N1**
164.56	8.8	290	5 820	7.0	0.09	97911/595	✓	✓	✓	✓									**2KJ3402 - ■■■■■ - ■■ M1**
149.60	9.7	290	5 820	7.0	0.11	17802/119	✓	✓	✓	✓									**2KJ3402 - ■■■■■ - ■■ L1**
131.17	11	290	5 820	7.0	0.12	15609/119	✓	✓	✓	✓	✓	✓							**2KJ3402 - ■■■■■ - ■■ K1**
117.08	12	290	5 820	7.0	0.15	13932/119	✓	✓	✓	✓	✓	✓							**2KJ3402 - ■■■■■ - ■■ J1**
104.34	14	290	5 820	7.0	0.18	7095/68	✓	✓	✓	✓	✓	✓							**2KJ3402 - ■■■■■ - ■■ H1**
96.31	15	290	5 820	7.0	0.21	21285/221	✓	✓	✓	✓	✓	✓							**2KJ3402 - ■■■■■ - ■■ G1**
84.32	17	290	5 820	7.1	0.25	140481/1666	✓	✓	✓	✓	✓	✓							**2KJ3402 - ■■■■■ - ■■ F1**
73.93	20	290	5 820	7.1	0.24	43989/595	✓	✓	✓	✓	✓	✓							**2KJ3402 - ■■■■■ - ■■ E1**
67.07	22	290	5 820	7.2	0.34	63855/952	✓	✓	✓	✓	✓	✓							**2KJ3402 - ■■■■■ - ■■ D1**
63.13	23	290	5 820	7.2	0.40	127710/2023	✓	✓	✓	✓	✓	✓							**2KJ3402 - ■■■■■ - ■■ C1**
55.65	26	290	5 820	7.2	0.44	946/17	✓	✓	✓	✓	✓	✓							**2KJ3402 - ■■■■■ - ■■ B1**
48.29	30	290	5 820	7.2	0.59	114939/2380	✓	✓	✓	✓	✓	✓							**2KJ3402 - ■■■■■ - ■■ A1**
FZ.39																			
65.21	22	290	6 040	6.3	0.06	913/14	✓	✓											**2KJ3302 - ■■■■■ - ■■ B2**
57.99	25	230	6 000	6.6	0.08	4059/70	✓	✓	✓	✓									**2KJ3302 - ■■■■■ - ■■ A2**
50.91	28	240	5 950	6.6	0.09	1782/35	✓	✓	✓	✓									**2KJ3302 - ■■■■■ - ■■ X1**
46.29	31	255	5 820	6.6	0.11	324/7	✓	✓	✓	✓									**2KJ3302 - ■■■■■ - ■■ W1**
39.60	37	290	5 950	6.7	0.13	198/5	✓	✓	✓	✓									**2KJ3302 - ■■■■■ - ■■ V1**
36.00	40	255	5 480	6.7	0.16	36/1	✓	✓	✓	✓									**2KJ3302 - ■■■■■ - ■■ U1**
31.82	46	285	5 320	6.8	0.19	891/28	✓	✓	✓	✓	✓	✓							**2KJ3302 - ■■■■■ - ■■ T1**
28.93	50	275	5 080	6.8	0.26	405/14	✓	✓	✓	✓	✓	✓							**2KJ3302 - ■■■■■ - ■■ S1**
25.34	57	265	4 930	6.9	0.30	1419/56	✓	✓	✓	✓	✓	✓							**2KJ3302 - ■■■■■ - ■■ R1**
23.39	62	260	4 730	6.9	0.36	4257/182	✓	✓	✓	✓	✓	✓							**2KJ3302 - ■■■■■ - ■■ Q1**
20.71	70	250	4 730	7.0	0.42	4059/196	✓	✓	✓	✓	✓	✓							**2KJ3302 - ■■■■■ - ■■ P1**
17.24	84	235	4 450	7.2	0.57	3861/224	✓	✓	✓	✓	✓	✓							**2KJ3302 - ■■■■■ - ■■ N1**
16.22	89	230	4 360	7.2	0.66	3861/238	✓	✓	✓	✓	✓	✓							**2KJ3302 - ■■■■■ - ■■ M1**
14.54	100	220	4 220	7.3	0.74	407/28	✓	✓	✓	✓	✓	✓							**2KJ3302 - ■■■■■ - ■■ L1**
12.38	117	210	3 990	7.5	0.97	99/8	✓	✓	✓	✓	✓	✓							**2KJ3302 - ■■■■■ - ■■ K1**
10.61	137	199	3 790	7.7	1.28	297/28			✓	✓	✓	✓							**2KJ3302 - ■■■■■ - ■■ J1**
9.13	159	189	3 610	7.9	1.65	1023/112			✓	✓	✓	✓							**2KJ3302 - ■■■■■ - ■■ H1**
8.10	179	167	3 430	12.1	0.70	3403/420	✓	✓	✓	✓	✓	✓							**2KJ3302 - ■■■■■ - ■■ G1**
6.74	215	152	3 270	12.5	0.96	1079/160	✓	✓	✓	✓	✓	✓							**2KJ3302 - ■■■■■ - ■■ F1**
6.35	228	149	3 200	12.5	1.11	1079/170	✓	✓	✓	✓	✓	✓							**2KJ3302 - ■■■■■ - ■■ E1**
5.69	255	140	3 120	12.9	1.29	3071/540	✓	✓	✓	✓	✓	✓							**2KJ3302 - ■■■■■ - ■■ D1**
4.84	300	128	3 000	13.4	1.73	581/120	✓	✓	✓	✓	✓	✓							**2KJ3302 - ■■■■■ - ■■ C1**
4.15	349	118	2 950	13.9	2.30	83/20			✓	✓	✓	✓							**2KJ3302 - ■■■■■ - ■■ B1**
3.57	406	108	2 890	14.5	3.00	2573/720			✓	✓	✓	✓							**2KJ3302 - ■■■■■ - ■■ A1**

[1] Only in conjunction with reduced-backlash version

© Siemens AG 2017

4

Selection and ordering data (continued)

i	n_2	T_{2N}	F_{R2}	φ [1]	J_G	R_{ex}	Motor frame size												Article No.
-	rpm	Nm	N	‘	10^{-4} kgm²	-	63	71	80	90	100	112	132	160	180	200	225	250	
FD.49																			
330.98	4.4	480	7 960	6.2	0.06	26809/81	✓	✓											2KJ3403 - ■■■■■ - ■■ S1
294.29	4.9	480	7 960	6.3	0.07	13243/45	✓	✓	✓	✓									2KJ3403 - ■■■■■ - ■■ R1
258.40	5.6	480	7 960	6.3	0.08	1292/5	✓	✓	✓	✓									2KJ3403 - ■■■■■ - ■■ Q1
234.91	6.2	480	7 960	6.3	0.10	2584/11	✓	✓	✓	✓									2KJ3403 - ■■■■■ - ■■ P1
200.98	7.2	480	7 960	6.3	0.12	9044/45	✓	✓	✓	✓									2KJ3403 - ■■■■■ - ■■ N1
182.71	7.9	480	7 960	6.3	0.14	18088/99	✓	✓	✓	✓									2KJ3403 - ■■■■■ - ■■ M1
161.50	9	480	7 960	6.3	0.17	323/2	✓	✓	✓	✓	✓	✓							2KJ3403 - ■■■■■ - ■■ L1
146.82	9.9	480	7 960	6.3	0.22	1615/11	✓	✓	✓	✓	✓	✓							2KJ3403 - ■■■■■ - ■■ K1
128.60	11	480	7 960	6.3	0.26	13889/108	✓	✓	✓	✓	✓	✓							2KJ3403 - ■■■■■ - ■■ J1
118.71	12	480	7 960	6.3	0.31	13889/117	✓	✓	✓	✓	✓	✓							2KJ3403 - ■■■■■ - ■■ H1
105.10	14	480	7 960	6.4	0.37	13243/126	✓	✓	✓	✓	✓	✓	✓						2KJ3403 - ■■■■■ - ■■ G1
87.48	17	480	7 960	6.4	0.50	4199/48	✓	✓	✓	✓	✓	✓	✓						2KJ3403 - ■■■■■ - ■■ F1
82.33	18	480	7 960	6.4	0.59	247/3	✓	✓	✓	✓	✓	✓	✓						2KJ3403 - ■■■■■ - ■■ E1
73.77	20	480	7 630	6.4	0.66	11951/162	✓	✓	✓	✓	✓	✓	✓						2KJ3403 - ■■■■■ - ■■ D1
62.81	23	480	7 070	6.4	0.86	2261/36	✓	✓	✓	✓	✓	✓	✓						2KJ3403 - ■■■■■ - ■■ C1
53.83	27	480	6 560	6.5	1.13	323/6			✓	✓	✓	✓	✓						2KJ3403 - ■■■■■ - ■■ B1
46.36	31	480	6 080	6.5	1.46	10013/216			✓	✓	✓	✓	✓						2KJ3403 - ■■■■■ - ■■ A1
FZ.49																			
61.43	24	480	6 990	6.0	0.18	1843/30	✓	✓	✓	✓									2KJ3303 - ■■■■■ - ■■ X1
55.85	26	480	6 680	6.0	0.22	1843/33	✓	✓	✓	✓									2KJ3303 - ■■■■■ - ■■ W1
47.50	31	480	6 160	6.0	0.27	95/2	✓	✓	✓	✓									2KJ3303 - ■■■■■ - ■■ V1
43.18	34	480	5 870	6.0	0.33	475/11	✓	✓	✓	✓									2KJ3303 - ■■■■■ - ■■ U1
38.53	38	480	5 530	6.1	0.39	1387/36	✓	✓	✓	✓	✓	✓							2KJ3303 - ■■■■■ - ■■ T1
34.55	42	480	5 220	6.1	0.47	380/11	✓	✓	✓	✓	✓	✓							2KJ3303 - ■■■■■ - ■■ S1
31.14	47	480	4 940	6.2	0.55	1121/36	✓	✓	✓	✓	✓	✓							2KJ3303 - ■■■■■ - ■■ R1
28.74	50	480	4 730	6.1	0.65	1121/39	✓	✓	✓	✓	✓	✓							2KJ3303 - ■■■■■ - ■■ Q1
26.24	55	480	4 490	6.2	0.77	551/21	✓	✓	✓	✓	✓	✓	✓						2KJ3303 - ■■■■■ - ■■ P1
21.77	67	480	4 030	6.3	0.99	1045/48	✓	✓	✓	✓	✓	✓	✓						2KJ3303 - ■■■■■ - ■■ N1
20.49	71	480	3 890	6.3	1.15	1045/51	✓	✓	✓	✓	✓	✓	✓						2KJ3303 - ■■■■■ - ■■ M1
19.35	75	480	3 750	6.3	1.30	1045/54	✓	✓	✓	✓	✓	✓	✓						2KJ3303 - ■■■■■ - ■■ L1
16.47	88	480	3 390	6.4	1.61	247/15	✓	✓	✓	✓	✓	✓	✓						2KJ3303 - ■■■■■ - ■■ K1
14.11	103	480	3 060	6.6	1.99	931/66			✓	✓	✓	✓	✓						2KJ3303 - ■■■■■ - ■■ J1
12.40	117	480	3 010	6.7	2.50	893/72			✓	✓	✓	✓	✓						2KJ3303 - ■■■■■ - ■■ H1
10.46	139	480	3 140	6.8	3.10	722/69			✓	✓	✓	✓	✓						2KJ3303 - ■■■■■ - ■■ G1
9.12	159	480	3 210	7.4	4.20	228/25			✓	✓	✓	✓	✓						2KJ3303 - ■■■■■ - ■■ F1
8.40	173	450	3 010	9.3	2.20	42/5	✓	✓	✓	✓	✓	✓	✓						2KJ3303 - ■■■■■ - ■■ E1
7.20	201	450	3 070	9.6	2.80	1029/143			✓	✓	✓	✓	✓						2KJ3303 - ■■■■■ - ■■ D1
6.33	229	430	3 090	9.9	3.50	329/52			✓	✓	✓	✓	✓						2KJ3303 - ■■■■■ - ■■ C1
5.34	272	400	3 080	10.2	4.60	1596/299			✓	✓	✓	✓	✓						2KJ3303 - ■■■■■ - ■■ B1
4.65	312	375	3 060	11.3	6.10	1512/325			✓	✓	✓	✓	✓						2KJ3303 - ■■■■■ - ■■ A1

[1] Only in conjunction with reduced-backlash version

© Siemens AG 2017

Selection and ordering data (continued)

i	n_2	T_{2N}	F_{R2}	φ [1]	J_G	R_{ex}	Motor frame size												Article No.
-	rpm	Nm	N	‘	10^{-4} kgm²	-	63	71	80	90	100	112	132	160	180	200	225	250	
FD.69																			
348.40	4.2	600	10 800	6.0	0.06	28220/81	✓	✓											2KJ3404 - ■■■■■ - ■■ S1
309.78	4.7	600	10 800	6.0	0.07	2788/9	✓	✓	✓	✓									2KJ3404 - ■■■■■ - ■■ R1
272.00	5.3	600	10 800	6.0	0.08	272/1	✓	✓	✓	✓									2KJ3404 - ■■■■■ - ■■ Q1
247.27	5.9	600	10 800	6.0	0.10	2720/11	✓	✓	✓	✓									2KJ3404 - ■■■■■ - ■■ P1
211.56	6.9	600	10 800	6.0	0.12	1904/9	✓	✓	✓	✓									2KJ3404 - ■■■■■ - ■■ N1
192.32	7.5	600	10 800	6.0	0.14	19040/99	✓	✓	✓	✓									2KJ3404 - ■■■■■ - ■■ M1
170.00	8.5	600	10 800	6.1	0.17	170/1	✓	✓	✓	✓	✓	✓							2KJ3404 - ■■■■■ - ■■ L1
154.55	9.4	600	10800	6.1	0.22	1700/11	✓	✓	✓	✓	✓	✓							2KJ3404 - ■■■■■ - ■■ K1
135.37	11	600	10 800	6.1	0.26	3655/27	✓	✓	✓	✓	✓	✓							2KJ3404 - ■■■■■ - ■■ J1
124.96	12	600	10 800	6.1	0.31	14620/117	✓	✓	✓	✓	✓	✓							2KJ3404 - ■■■■■ - ■■ H1
110.63	13	600	10 800	6.1	0.38	6970/63	✓	✓	✓	✓	✓	✓	✓						2KJ3404 - ■■■■■ - ■■ G1
92.08	16	600	10 800	6.1	0.51	1105/12	✓	✓	✓	✓	✓	✓	✓						2KJ3404 - ■■■■■ - ■■ F1
86.67	17	600	10 800	6.1	0.60	260/3	✓	✓	✓	✓	✓	✓	✓						2KJ3404 - ■■■■■ - ■■ E1
77.65	19	600	10 400	6.2	0.66	6290/81	✓	✓	✓	✓	✓	✓	✓						2KJ3404 - ■■■■■ - ■■ D1
66.11	22	600	9 720	6.2	0.87	595/9	✓	✓	✓	✓	✓	✓	✓						2KJ3404 - ■■■■■ - ■■ C1
56.67	26	600	9 050	6.2	1.15	170/3			✓	✓	✓	✓	✓						2KJ3404 - ■■■■■ - ■■ B1
48.80	30	600	8 430	6.2	1.47	2635/54			✓	✓	✓	✓	✓						2KJ3404 - ■■■■■ - ■■ A1
FZ.69																			
64.67	22	600	9 620	5.7	0.19	194/3	✓	✓	✓	✓									2KJ3304 - ■■■■■ - ■■ X1
58.79	25	600	9 210	5.7	0.23	1940/33	✓	✓	✓	✓									2KJ3304 - ■■■■■ - ■■ W1
50.00	29	600	8 530	5.8	0.29	50/1	✓	✓	✓	✓									2KJ3304 - ■■■■■ - ■■ V1
45.45	32	600	8 140	5.8	0.35	500/11	✓	✓	✓	✓									2KJ3304 - ■■■■■ - ■■ U1
40.56	36	600	7 700	5.8	0.41	365/9	✓	✓	✓	✓	✓	✓							2KJ3304 - ■■■■■ - ■■ T1
36.36	40	600	7 290	5.9	0.49	400/11	✓	✓	✓	✓	✓	✓							2KJ3304 - ■■■■■ - ■■ S1
32.78	44	600	6 920	5.9	0.58	295/9	✓	✓	✓	✓	✓	✓							2KJ3304 - ■■■■■ - ■■ R1
30.26	48	600	6 640	5.9	0.69	1180/39	✓	✓	✓	✓	✓	✓							2KJ3304 - ■■■■■ - ■■ Q1
27.62	52	600	6 330	5.9	0.83	580/21	✓	✓	✓	✓	✓	✓	✓						2KJ3304 - ■■■■■ - ■■ P1
22.92	63	600	5 720	6.0	1.07	275/12	✓	✓	✓	✓	✓	✓	✓						2KJ3304 - ■■■■■ - ■■ N1
21.57	67	600	5 540	6.0	1.23	1100/51	✓	✓	✓	✓	✓	✓	✓						2KJ3304 - ■■■■■ - ■■ M1
20.37	71	600	5 360	6.0	1.39	550/27	✓	✓	✓	✓	✓	✓	✓						2KJ3304 - ■■■■■ - ■■ L1
17.33	84	600	4 890	6.2	1.74	52/3	✓	✓	✓	✓	✓	✓	✓						2KJ3304 - ■■■■■ - ■■ K1
14.85	98	600	4 450	6.2	2.20	490/33			✓	✓	✓	✓	✓						2KJ3304 - ■■■■■ - ■■ J1
13.06	111	600	4 110	6.2	2.70	235/18			✓	✓	✓	✓	✓						2KJ3304 - ■■■■■ - ■■ H1
11.01	132	600	4 040	6.2	3.50	760/69			✓	✓	✓	✓	✓						2KJ3304 - ■■■■■ - ■■ G1
9.60	151	600	4 140	6.2	4.60	48/5			✓	✓	✓	✓	✓						2KJ3304 - ■■■■■ - ■■ F1
8.90	163	475	4 040	8.9	2.40	89/10	✓	✓	✓	✓	✓	✓	✓						2KJ3304 - ■■■■■ - ■■ E1
7.62	190	465	4 100	8.9	3.10	4361/572			✓	✓	✓	✓	✓						2KJ3304 - ■■■■■ - ■■ D1
6.70	216	440	4 120	8.9	3.90	4183/624			✓	✓	✓	✓	✓						2KJ3304 - ■■■■■ - ■■ C1
5.66	256	410	4 110	8.9	5.10	1691/299			✓	✓	✓	✓	✓						2KJ3304 - ■■■■■ - ■■ B1
4.93	294	385	4 070	8.9	6.80	1602/325			✓	✓	✓	✓	✓						2KJ3304 - ■■■■■ - ■■ A1

[1] Only in conjunction with reduced-backlash version

© Siemens AG 2017

4

Selection and ordering data (continued)

i	n_2	T_{2N}	F_{R2}	φ [1]	J_G	R_{ex}	Motor frame size												Article No.
-	rpm	Nm	N	'	10^{-4} kgm²	-	63	71	80	90	100	112	132	160	180	200	225	250	
FD.79																			
357.00	4.1	1 000	13 600	5.6	0.17	57133/160		✓	✓	✓									2KJ3405 - ■■■■■ - ■■ S1
324.62	4.5	1 000	13 600	5.6	0.20	57133/176		✓	✓	✓									2KJ3405 - ■■■■■ - ■■ R1
276.09	5.3	1 000	13 600	5.6	0.25	8835/32		✓	✓	✓									2KJ3405 - ■■■■■ - ■■ Q1
250.99	5.8	1 000	13 600	5.6	0.30	44175/176		✓	✓	✓									2KJ3405 - ■■■■■ - ■■ P1
223.94	6.5	1 000	13 600	5.6	0.35	42997/192		✓	✓	✓	✓	✓							2KJ3405 - ■■■■■ - ■■ N1
200.80	7.2	1 000	13 600	5.6	0.42	8835/44		✓	✓	✓	✓	✓							2KJ3405 - ■■■■■ - ■■ M1
180.99	8	1 000	13 600	5.6	0.49	34751/192		✓	✓	✓	✓	✓							2KJ3405 - ■■■■■ - ■■ L1
167.07	8.7	1 000	13 600	5.6	0.58	34751/208		✓	✓	✓	✓	✓							2KJ3405 - ■■■■■ - ■■ K1
152.51	9.5	1 000	13 600	5.6	0.69	17081/112		✓	✓	✓	✓	✓	✓	✓					2KJ3405 - ■■■■■ - ■■ J1
126.54	11	1 000	13 600	5.7	0.87	32395/256		✓	✓	✓	✓	✓	✓	✓					2KJ3405 - ■■■■■ - ■■ H1
119.10	12	1 000	13 600	5.7	1.01	32395/272		✓	✓	✓	✓	✓	✓	✓					2KJ3405 - ■■■■■ - ■■ G1
112.48	13	1 000	13 600	5.7	1.15	32395/288		✓	✓	✓	✓	✓	✓	✓					2KJ3405 - ■■■■■ - ■■ F1
95.71	15	1 000	13 600	5.7	1.39	7657/80		✓	✓	✓	✓	✓	✓	✓					2KJ3405 - ■■■■■ - ■■ E1
81.99	18	1 000	13 600	5.7	1.70	28861/352			✓	✓	✓	✓	✓	✓					2KJ3405 - ■■■■■ - ■■ D1
72.09	20	1 000	13 600	5.7	2.10	27683/384			✓	✓	✓	✓	✓	✓					2KJ3405 - ■■■■■ - ■■ C1
60.82	24	1 000	13 600	5.7	2.60	11191/184			✓	✓	✓	✓	✓	✓					2KJ3405 - ■■■■■ - ■■ B1
53.01	27	1 000	13 600	5.8	3.50	5301/100			✓	✓	✓	✓	✓	✓					2KJ3405 - ■■■■■ - ■■ A1
FZ.79																			
53.55	27	1 000	13 600	5.6	0.56	589/11		✓	✓	✓									2KJ3305 - ■■■■■ - ■■ X1
48.03	30	1 000	13 600	5.6	0.77	1729/36		✓	✓	✓	✓	✓							2KJ3305 - ■■■■■ - ■■ W1
43.18	34	1 000	13 600	5.7	0.87	475/11		✓	✓	✓	✓	✓							2KJ3305 - ■■■■■ - ■■ V1
39.06	37	1 000	13 600	5.7	0.97	703/18		✓	✓	✓	✓	✓							2KJ3305 - ■■■■■ - ■■ U1
36.05	40	1 000	13 600	5.7	1.15	1406/39		✓	✓	✓	✓	✓							2KJ3305 - ■■■■■ - ■■ T1
33.02	44	1 000	13 600	5.7	1.49	1387/42		✓	✓	✓	✓	✓	✓	✓					2KJ3305 - ■■■■■ - ■■ S1
27.71	52	1 000	13 600	5.7	1.62	665/24		✓	✓	✓	✓	✓	✓	✓					2KJ3305 - ■■■■■ - ■■ R1
26.08	56	1 000	13 600	5.7	1.85	1330/51		✓	✓	✓	✓	✓	✓	✓					2KJ3305 - ■■■■■ - ■■ Q1
23.93	61	1 000	13 600	5.7	2.0	646/27		✓	✓	✓	✓	✓	✓	✓					2KJ3305 - ■■■■■ - ■■ P1
20.90	69	1 000	13 600	5.7	2.9	209/10		✓	✓	✓	✓	✓	✓	✓					2KJ3305 - ■■■■■ - ■■ N1
18.71	77	1 000	12 900	5.7	3.6	1235/66			✓	✓	✓	✓	✓	✓					2KJ3305 - ■■■■■ - ■■ M1
16.36	89	1 000	12 200	5.7	4.2	589/36			✓	✓	✓	✓	✓	✓					2KJ3305 - ■■■■■ - ■■ L1
14.04	103	1 000	11 400	5.8	4.7	323/23			✓	✓	✓	✓	✓	✓					2KJ3305 - ■■■■■ - ■■ K1
12.41	117	1 000	10 800	6.2	6.0	931/75			✓	✓	✓	✓	✓	✓					2KJ3305 - ■■■■■ - ■■ J1
10.56	137	1 000	10 100	6.3	7.8	95/9					✓	✓	✓	✓					2KJ3305 - ■■■■■ - ■■ H1
9.05	160	1 000	9 980	6.5	10	190/21					✓	✓	✓	✓					2KJ3305 - ■■■■■ - ■■ G1
8.51	170	720	10 300	8.9	4.6	468/55			✓	✓	✓	✓	✓	✓					2KJ3305 - ■■■■■ - ■■ F1
7.44	195	725	9 770	9.2	5.5	186/25			✓	✓	✓	✓	✓	✓					2KJ3305 - ■■■■■ - ■■ E1
6.39	227	720	9 690	9.3	6.5	3672/575			✓	✓	✓	✓	✓	✓					2KJ3305 - ■■■■■ - ■■ D1
5.64	257	700	9 620	10.2	8.3	3528/625			✓	✓	✓	✓	✓	✓					2KJ3305 - ■■■■■ - ■■ C1
4.80	302	650	9 480	10.6	11	24/5					✓	✓	✓	✓					2KJ3305 - ■■■■■ - ■■ B1
4.11	353	605	9 310	11.0	15	144/35					✓	✓	✓	✓					2KJ3305 - ■■■■■ - ■■ A1

[1] Only in conjunction with reduced-backlash version

© Siemens AG 2017

Selection and ordering data (continued)

i	n_2	T_{2N}	F_{R2}	φ [1]	J_G	R_{ex}	Motor frame size												Article No.
-	rpm	Nm	N	'	10^{-4} kgm²	-	63	71	80	90	100	112	132	160	180	200	225	250	
FD.89																			
335.30	4.3	1 850	17 400	5.1	0.42	370512/1105			✓	✓	✓	✓							2KJ3406 - ■■■■■ - ■■ S1
304.82	4.8	1 850	17 400	5.1	0.51	741024/2431			✓	✓	✓	✓							2KJ3406 - ■■■■■ - ■■ R1
273.41	5.3	1 850	17 400	5.1	0.71	4648/17			✓	✓	✓	✓							2KJ3406 - ■■■■■ - ■■ Q1
245.82	5.9	1 850	17 400	5.1	0.79	597600/2431			✓	✓	✓	✓							2KJ3406 - ■■■■■ - ■■ P1
222.33	6.5	1 850	17 400	5.1	0.88	49136/221			✓	✓	✓	✓							2KJ3406 - ■■■■■ - ■■ N1
205.23	7.1	1 850	17 400	5.1	1.03	589632/2873			✓	✓	✓	✓							2KJ3406 - ■■■■■ - ■■ M1
188.00	7.7	1 850	17 400	5.1	1.35	290832/1547			✓	✓	✓	✓	✓	✓					2KJ3406 - ■■■■■ - ■■ L1
157.74	9.2	1 850	17 400	5.1	1.43	34860/221			✓	✓	✓	✓	✓	✓					2KJ3406 - ■■■■■ - ■■ K1
148.46	9.8	1 850	17 400	5.1	1.64	557760/3757			✓	✓	✓	✓	✓	✓					2KJ3406 - ■■■■■ - ■■ J1
136.21	11	1 850	17 400	5.1	1.79	5312/39			✓	✓	✓	✓	✓	✓					2KJ3406 - ■■■■■ - ■■ H1
118.98	12	1 850	17 400	5.1	2.6	131472/1105			✓	✓	✓	✓	✓	✓					2KJ3406 - ■■■■■ - ■■ G1
106.52	14	1 850	17 400	5.1	3.1	19920/187			✓	✓	✓	✓	✓	✓					2KJ3406 - ■■■■■ - ■■ F1
93.14	16	1 850	17 400	5.1	3.7	20584/221			✓	✓	✓	✓	✓	✓					2KJ3406 - ■■■■■ - ■■ E1
79.95	18	1 850	17 400	5.2	4.0	23904/299			✓	✓	✓	✓	✓	✓					2KJ3406 - ■■■■■ - ■■ D1
70.67	21	1 850	17 400	5.2	5.1	390432/5525			✓	✓	✓	✓	✓	✓					2KJ3406 - ■■■■■ - ■■ C1
60.09	24	1 850	17 400	5.3	6.5	13280/221					✓	✓	✓	✓					2KJ3406 - ■■■■■ - ■■ B1
51.51	28	1 850	17 400	5.3	8.5	79680/1547					✓	✓	✓	✓					2KJ3406 - ■■■■■ - ■■ A1
FZ.89																			
61.72	23	1 850	17 400	4.8	1.38	2407/39			✓	✓	✓	✓							2KJ3306 - ■■■■■ - ■■ B2
55.72	26	1 850	17 400	4.8	1.51	7968/143			✓	✓	✓	✓							2KJ3306 - ■■■■■ - ■■ A2
50.54	29	1 850	17 400	4.8	1.77	7885/156			✓	✓	✓	✓							2KJ3306 - ■■■■■ - ■■ X1
46.66	31	1 850	17 400	4.8	2.1	7885/169			✓	✓	✓	✓							2KJ3306 - ■■■■■ - ■■ W1
42.41	34	1 850	17 400	4.9	2.4	7719/182			✓	✓	✓	✓	✓	✓					2KJ3306 - ■■■■■ - ■■ V1
35.91	40	1 850	17 400	4.9	2.9	3735/104			✓	✓	✓	✓	✓	✓					2KJ3306 - ■■■■■ - ■■ U1
33.80	43	1 850	17 400	4.9	3.0	7470/221			✓	✓	✓	✓	✓	✓					2KJ3306 - ■■■■■ - ■■ T1
31.21	46	1 850	17 400	5.0	4.5	3652/117			✓	✓	✓	✓	✓	✓					2KJ3306 - ■■■■■ - ■■ S1
27.77	52	1 850	17 400	5.0	5.5	7221/260			✓	✓	✓	✓	✓	✓					2KJ3306 - ■■■■■ - ■■ R1
24.67	59	1 850	17 400	5.0	6.7	7055/286			✓	✓	✓	✓	✓	✓					2KJ3306 - ■■■■■ - ■■ Q1
22.08	66	1 850	17 400	5.1	6.7	6889/312			✓	✓	✓	✓	✓	✓					2KJ3306 - ■■■■■ - ■■ P1
18.88	77	1 850	17 200	5.1	7.9	5644/299			✓	✓	✓	✓	✓	✓					2KJ3306 - ■■■■■ - ■■ N1
16.86	86	1 850	16 400	5.4	10	5478/325			✓	✓	✓	✓	✓	✓	✓				2KJ3306 - ■■■■■ - ■■ M1
14.90	97	1 850	15 500	5.5	12	581/39					✓	✓	✓	✓	✓				2KJ3306 - ■■■■■ - ■■ L1
13.07	111	1 850	14 600	5.3	16	3569/273					✓	✓	✓	✓	✓				2KJ3306 - ■■■■■ - ■■ K1
11.38	127	1 850	14 600	5.3	20	3403/299					✓	✓	✓	✓	✓				2KJ3306 - ■■■■■ - ■■ J1
9.73	149	1 850	14 600	5.5	26	2656/273					✓	✓	✓	✓	✓				2KJ3306 - ■■■■■ - ■■ H1
8.33	174	1 740	14 500	5.6	33	2490/299					✓	✓	✓	✓	✓				2KJ3306 - ■■■■■ - ■■ G1
7.60	191	1 100	14 100	9.0	14	4752/625			✓	✓	✓	✓	✓	✓	✓				2KJ3306 - ■■■■■ - ■■ F1
6.72	216	1 110	14 000	9.2	17	168/25					✓	✓	✓	✓	✓				2KJ3306 - ■■■■■ - ■■ E1
5.90	246	1 110	13 800	9.2	23	1032/175					✓	✓	✓	✓	✓				2KJ3306 - ■■■■■ - ■■ D1
5.13	283	1 110	13 600	9.2	28	2952/575					✓	✓	✓	✓	✓				2KJ3306 - ■■■■■ - ■■ C1
4.39	330	1 060	13 300	9.2	39	768/175					✓	✓	✓	✓	✓				2KJ3306 - ■■■■■ - ■■ B1
3.76	386	985	12 900	9.5	50	432/115					✓	✓	✓	✓	✓				2KJ3306 - ■■■■■ - ■■ A1

[1] Only in conjunction with reduced-backlash version

© Siemens AG 2017

Transmission ratios and torques

Selection and ordering data (continued)

i	n_2	T_{2N}	F_{R2}	φ [1]	J_G	R_{ex}	Motor frame size												Article No.
-	rpm	Nm	N	'	10^{-4} kgm²	-	63	71	80	90	100	112	132	160	180	200	225	250	
FD.109																			
410.00	3.5	3 100	25 000	6.5	1.27	332021/810				✓	✓	✓							2KJ3407 - ■■■■■ - ■■ T1
370.00	3.9	3 100	25 000	6.5	1.37	183184/495				✓	✓	✓							2KJ3407 - ■■■■■ - ■■ S1
335.70	4.3	3 100	25 000	6.5	1.61	217531/648				✓	✓	✓							2KJ3407 - ■■■■■ - ■■ R1
309.87	4.7	3 100	25 000	6.5	1.89	217531/702				✓	✓	✓							2KJ3407 - ■■■■■ - ■■ Q1
281.68	5.1	3 100	25 000	6.5	2.2	354919/1260				✓	✓	✓	✓	✓					2KJ3407 - ■■■■■ - ■■ P1
238.52	6.1	3 100	25 000	6.5	2.6	11449/48				✓	✓	✓	✓	✓					2KJ3407 - ■■■■■ - ■■ N1
224.49	6.5	3 100	25 000	6.5	2.6	11449/51				✓	✓	✓	✓	✓					2KJ3407 - ■■■■■ - ■■ M1
207.31	7	3 100	25 000	6.5	4.0	251878/1215				✓	✓	✓	✓	✓					2KJ3407 - ■■■■■ - ■■ L1
184.46	7.9	3 100	25 000	6.5	5.0	332021/1800				✓	✓	✓	✓	✓					2KJ3407 - ■■■■■ - ■■ K1
163.83	8.9	3 100	25 000	6.5	5.9	194633/1188				✓	✓	✓	✓	✓					2KJ3407 - ■■■■■ - ■■ J1
146.65	9.9	3 100	25 000	6.5	5.9	950267/6480				✓	✓	✓	✓	✓					2KJ3407 - ■■■■■ - ■■ H1
125.37	12	3 100	25 000	6.5	6.7	389266/3105				✓	✓	✓	✓	✓					2KJ3407 - ■■■■■ - ■■ G1
111.95	13	3 100	25 000	6.5	8.6	125939/1125				✓	✓	✓	✓	✓					2KJ3407 - ■■■■■ - ■■ F1
98.94	15	3 100	25 000	6.5	9.6	80143/810					✓	✓	✓	✓					2KJ3407 - ■■■■■ - ■■ E1
86.83	17	3 100	25 000	6.5	14	492307/5670					✓	✓	✓	✓					2KJ3407 - ■■■■■ - ■■ D1
75.59	19	3 100	25 000	6.5	16	469409/6210					✓	✓	✓	✓					2KJ3407 - ■■■■■ - ■■ C1
64.62	22	3 100	25 000	6.5	21	183184/2835					✓	✓	✓	✓					2KJ3407 - ■■■■■ - ■■ B1
55.31	26	3 100	25 000	6.5	25	11449/207					✓	✓	✓	✓					2KJ3407 - ■■■■■ - ■■ A1
FZ.109																			
70.74	20	3 100	25 000	4.6	3.6	12733/180				✓	✓	✓							2KJ3307 - ■■■■■ - ■■ B2
65.30	22	3 100	25 000	4.6	4.3	12733/195				✓	✓	✓							2KJ3307 - ■■■■■ - ■■ A2
60.12	24	3 100	25 000	4.6	4.9	6313/105				✓	✓	✓	✓	✓					2KJ3307 - ■■■■■ - ■■ X1
51.27	28	3 100	25 000	4.6	6.3	2461/48				✓	✓	✓	✓	✓					2KJ3307 - ■■■■■ - ■■ W1
48.25	30	3 100	25 000	4.6	7.1	2461/51				✓	✓	✓	✓	✓					2KJ3307 - ■■■■■ - ■■ V1
44.78	32	3 100	25 000	4.6	7.8	12091/270				✓	✓	✓	✓	✓					2KJ3307 - ■■■■■ - ■■ U1
39.59	37	3 100	25 000	4.6	9.5	3959/100				✓	✓	✓	✓	✓					2KJ3307 - ■■■■■ - ■■ T1
35.34	41	3 100	24 700	4.7	11	11663/330				✓	✓	✓	✓	✓					2KJ3307 - ■■■■■ - ■■ S1
31.80	46	3 100	23 600	4.7	13	11449/360				✓	✓	✓	✓	✓					2KJ3307 - ■■■■■ - ■■ R1
27.60	53	3 100	22 200	4.7	16	9523/345				✓	✓	✓	✓	✓					2KJ3307 - ■■■■■ - ■■ Q1
24.82	58	3 100	21 200	4.9	19	3103/125				✓	✓	✓	✓	✓	✓				2KJ3307 - ■■■■■ - ■■ P1
21.70	67	3 100	19 900	5.0	23	7811/360					✓	✓	✓	✓	✓	✓			2KJ3307 - ■■■■■ - ■■ N1
19.36	75	3 100	18 900	5.0	27	2033/105					✓	✓	✓	✓	✓	✓	✓		2KJ3307 - ■■■■■ - ■■ M1
17.06	85	3 100	17 800	5.0	33	1177/69					✓	✓	✓	✓	✓	✓	✓		2KJ3307 - ■■■■■ - ■■ L1
14.95	97	3 100	16 700	5.1	40	4708/315					✓	✓	✓	✓	✓	✓	✓		2KJ3307 - ■■■■■ - ■■ K1
13.03	111	3 100	15 600	5.2	48	1498/115					✓	✓	✓	✓	✓	✓	✓		2KJ3307 - ■■■■■ - ■■ J1
11.89	122	3 060	15 600	5.2	56	107/9					✓	✓	✓	✓	✓	✓	✓		2KJ3307 - ■■■■■ - ■■ H1
10.23	142	2 880	15 900	5.3	70	1177/115							✓	✓	✓	✓	✓		2KJ3307 - ■■■■■ - ■■ G1
9.02	161	2 090	16 100	7.6	36	1767/196					✓	✓	✓	✓	✓	✓	✓		2KJ3307 - ■■■■■ - ■■ F1
7.94	183	2 000	15 800	7.8	44	5115/644					✓	✓	✓	✓	✓	✓	✓		2KJ3307 - ■■■■■ - ■■ E1
6.96	208	1 900	15 700	7.9	54	341/49					✓	✓	✓	✓	✓	✓	✓		2KJ3307 - ■■■■■ - ■■ D1
6.07	239	1 800	15 600	8.1	68	279/46					✓	✓	✓	✓	✓	✓	✓		2KJ3307 - ■■■■■ - ■■ C1
5.54	262	1 730	15 400	8.2	79	155/28					✓	✓	✓	✓	✓	✓	✓		2KJ3307 - ■■■■■ - ■■ B1
4.77	304	1 620	15 200	8.4	102	3069/644							✓	✓	✓	✓	✓		2KJ3307 - ■■■■■ - ■■ A1

[1] Only in conjunction with reduced-backlash version

© Siemens AG 2017

Selection and ordering data (continued)

i	n_2	T_{2N}	F_{R2}	φ [1]	J_G	R_{ex}	Motor frame size												Article No.
-	rpm	Nm	N	‘	10^{-4} kgm²	-	63	71	80	90	100	112	132	160	180	200	225	250	
FD.129																			
413.00	3.5	4 850	37 200	5.5	3.3	9911/24				✓	✓	✓							2KJ3408 - ■■■■■ - ■■ T1
381.00	3.8	4 850	37 200	5.5	3.9	9911/26				✓	✓	✓							2KJ3408 - ■■■■■ - ■■ S1
351.00	4.1	4 850	37 200	5.5	4.5	34397/98				✓	✓	✓	✓	✓					2KJ3408 - ■■■■■ - ■■ R1
299.31	4.8	4 850	37 200	5.5	5.6	67045/224				✓	✓	✓	✓	✓					2KJ3408 - ■■■■■ - ■■ Q1
281.70	5.1	4 850	37 200	5.5	6.4	67045/238				✓	✓	✓	✓	✓					2KJ3408 - ■■■■■ - ■■ P1
261.42	5.5	4 850	37 200	5.5	6.9	65879/252				✓	✓	✓	✓	✓					2KJ3408 - ■■■■■ - ■■ N1
231.12	6.3	4 850	37 200	5.5	8.4	64713/280				✓	✓	✓	✓	✓					2KJ3408 - ■■■■■ - ■■ M1
206.32	7	4 850	37 200	5.5	10	5777/28				✓	✓	✓	✓	✓					2KJ3408 - ■■■■■ - ■■ L1
185.66	7.8	4 850	37 200	5.5	12	62381/336				✓	✓	✓	✓	✓					2KJ3408 - ■■■■■ - ■■ K1
161.14	9	4 850	37 200	5.5	14	51887/322				✓	✓	✓	✓	✓					2KJ3408 - ■■■■■ - ■■ J1
144.92	10	4 850	37 200	5.5	16	50721/350				✓	✓	✓	✓	✓					2KJ3408 - ■■■■■ - ■■ H1
126.66	11	4 850	37 200	5.5	19	42559/336					✓	✓	✓	✓					2KJ3408 - ■■■■■ - ■■ G1
113.03	13	4 850	37 200	5.5	23	11077/98					✓	✓	✓	✓					2KJ3408 - ■■■■■ - ■■ F1
99.58	15	4 850	37 200	5.5	27	32065/322					✓	✓	✓	✓					2KJ3408 - ■■■■■ - ■■ E1
87.25	17	4 850	37 200	5.5	32	12826/147					✓	✓	✓	✓					2KJ3408 - ■■■■■ - ■■ D1
76.04	19	4 850	37 200	5.5	37	1749/23					✓	✓	✓	✓					2KJ3408 - ■■■■■ - ■■ C1
69.40	21	4 850	37 200	5.5	44	2915/42					✓	✓	✓	✓					2KJ3408 - ■■■■■ - ■■ B1
59.75	24	4 850	37 200	5.5	53	19239/322							✓	✓					2KJ3408 - ■■■■■ - ■■ A1
FZ.129																			
69.20	21	4 850	37 200	5.1	7.7	13563/196				✓	✓	✓	✓	✓					2KJ3308 - ■■■■■ - ■■ A2
59.22	24	4 850	37 200	5.1	9.7	6633/112				✓	✓	✓	✓	✓					2KJ3308 - ■■■■■ - ■■ X1
55.74	26	4 850	37 200	5.1	11	6633/119				✓	✓	✓	✓	✓					2KJ3308 - ■■■■■ - ■■ W1
52.25	28	4 850	36 600	5.1	12	209/4				✓	✓	✓	✓	✓					2KJ3308 - ■■■■■ - ■■ V1
46.32	31	4 850	34 800	5.1	15	12969/280				✓	✓	✓	✓	✓					2KJ3308 - ■■■■■ - ■■ U1
41.14	35	4 850	33 100	5.1	18	288/7				✓	✓	✓	✓	✓					2KJ3308 - ■■■■■ - ■■ T1
37.12	39	4 850	31 700	5.1	21	297/8				✓	✓	✓	✓	✓					2KJ3308 - ■■■■■ - ■■ S1
32.90	44	4 850	30 100	5.2	26	10593/322				✓	✓	✓	✓	✓					2KJ3308 - ■■■■■ - ■■ R1
29.13	50	4 850	28 500	5.3	29	10197/350				✓	✓	✓	✓	✓	✓				2KJ3308 - ■■■■■ - ■■ Q1
25.93	56	4 850	27 100	5.3	35	363/14					✓	✓	✓	✓	✓	✓			2KJ3308 - ■■■■■ - ■■ P1
23.23	62	4 850	25 800	5.3	41	2277/98					✓	✓	✓	✓	✓	✓	✓		2KJ3308 - ■■■■■ - ■■ N1
20.60	70	4 850	24 400	5.3	49	6633/322					✓	✓	✓	✓	✓	✓	✓		2KJ3308 - ■■■■■ - ■■ M1
18.18	80	4 850	23 000	5.4	60	891/49					✓	✓	✓	✓	✓	✓	✓	✓	2KJ3308 - ■■■■■ - ■■ L1
15.99	91	4 800	21 700	5.4	73	2574/161					✓	✓	✓	✓	✓	✓	✓	✓	2KJ3308 - ■■■■■ - ■■ K1
14.48	100	4 690	21 000	5.5	83	1419/98					✓	✓	✓	✓	✓	✓	✓	✓	2KJ3308 - ■■■■■ - ■■ J1
12.61	115	4 530	20 100	5.5	101	4059/322							✓	✓	✓	✓	✓	✓	2KJ3308 - ■■■■■ - ■■ H1
10.34	140	4 320	20 400	5.5	135	1881/182							✓	✓	✓	✓	✓	✓	2KJ3308 - ■■■■■ - ■■ G1
9.80	148	3 630	19 600	8.1	64	2479/253					✓	✓	✓	✓	✓	✓	✓		2KJ3308 - ■■■■■ - ■■ F1
8.65	168	3 640	19 700	8.1	79	666/77					✓	✓	✓	✓	✓	✓	✓	✓	2KJ3308 - ■■■■■ - ■■ E1
7.60	191	3 620	19 800	8.1	97	1924/253					✓	✓	✓	✓	✓	✓	✓	✓	2KJ3308 - ■■■■■ - ■■ D1
6.89	210	3 630	19 700	8.2	112	1591/231					✓	✓	✓	✓	✓	✓	✓	✓	2KJ3308 - ■■■■■ - ■■ C1
6.00	242	3 640	19 600	8.3	140	1517/253							✓	✓	✓	✓	✓	✓	2KJ3308 - ■■■■■ - ■■ B1
4.92	295	3 030	19 300	8.5	192	703/143							✓	✓	✓	✓	✓	✓	2KJ3308 - ■■■■■ - ■■ A1

[1] Only in conjunction with reduced-backlash version

© Siemens AG 2017

4

Selection and ordering data (continued)

i	n_2	T_{2N}	F_{R2}	φ [1]	J_G	R_{ex}	Motor frame size												Article No.
-	rpm	Nm	N	'	10^{-4} kgm²	-	63	71	80	90	100	112	132	160	180	200	225	250	
FD.149																			
377.00	3.8	8 000	65 000	4.8	7.1	18495/49					✓	✓	✓	✓					2KJ3410 - ■■■■■ - ■■ W1
323.04	4.5	8 000	65 000	4.8	9	9045/28					✓	✓	✓	✓					2KJ3410 - ■■■■■ - ■■ V1
304.03	4.8	8 000	65 000	4.8	10	36180/119					✓	✓	✓	✓					2KJ3410 - ■■■■■ - ■■ U1
285.00	5.1	8 000	6 5000	4.8	11	285/1					✓	✓	✓	✓					2KJ3410 - ■■■■■ - ■■ T1
252.64	5.7	8 000	65 000	4.8	14	3537/14					✓	✓	✓	✓					2KJ3410 - ■■■■■ - ■■ S1
224.42	6.5	8 000	65 000	4.8	16	17280/77					✓	✓	✓	✓					2KJ3410 - ■■■■■ - ■■ R1
202.50	7.2	8 000	65 000	4.8	19	405/2					✓	✓	✓	✓					2KJ3410 - ■■■■■ - ■■ Q1
179.44	8.1	8 000	65 000	4.8	23	28890/161					✓	✓	✓	✓					2KJ3410 - ■■■■■ - ■■ P1
158.91	9.1	8 000	65 000	4.8	26	5562/35					✓	✓	✓	✓	✓				2KJ3410 - ■■■■■ - ■■ N1
141.43	10	8 000	65 000	4.8	31	990/7					✓	✓	✓	✓	✓	✓			2KJ3410 - ■■■■■ - ■■ M1
126.73	11	8 000	65 000	4.8	37	6210/49					✓	✓	✓	✓	✓	✓	✓		2KJ3410 - ■■■■■ - ■■ L1
112.36	13	8 000	63 600	4.8	43	18090/161					✓	✓	✓	✓	✓	✓	✓		2KJ3410 - ■■■■■ - ■■ K1
99.18	15	8 000	60 700	4.8	53	4860/49					✓	✓	✓	✓	✓	✓	✓	✓	2KJ3410 - ■■■■■ - ■■ J1
87.20	17	8 000	57 700	4.8	63	14040/161					✓	✓	✓	✓	✓	✓	✓	✓	2KJ3410 - ■■■■■ - ■■ H1
78.98	18	8 000	54 800	4.8	71	3870/49					✓	✓	✓	✓	✓	✓	✓	✓	2KJ3410 - ■■■■■ - ■■ G1
68.76	21	8 000	52 600	4.9	85	11070/161							✓	✓	✓	✓	✓	✓	2KJ3410 - ■■■■■ - ■■ F1
56.37	26	8 000	49 600	4.9	111	5130/91							✓	✓	✓	✓	✓	✓	2KJ3410 - ■■■■■ - ■■ E1
50.01	29	8 000	45 600	5.2	73	37960/759					✓	✓	✓	✓	✓	✓	✓	✓	2KJ3410 - ■■■■■ - ■■ D1
45.30	32	8 000	43 300	5.2	83	31390/693					✓	✓	✓	✓	✓	✓	✓	✓	2KJ3410 - ■■■■■ - ■■ C1
39.43	37	7 970	41 400	5.2	102	29930/759							✓	✓	✓	✓	✓	✓	2KJ3410 - ■■■■■ - ■■ B1
32.33	45	7 510	39 000	5.2	135	13870/429							✓	✓	✓	✓	✓	✓	2KJ3410 - ■■■■■ - ■■ A1
FZ.149																			
48.48	30	8 000	42 700	4.6	31	1600/33					✓	✓	✓	✓					2KJ3310 - ■■■■■ - ■■ T1
43.89	33	8 000	40 800	4.6	36	395/9					✓	✓	✓	✓					2KJ3310 - ■■■■■ - ■■ S1
38.55	38	8 000	38 500	4.6	44	2660/69					✓	✓	✓	✓					2KJ3310 - ■■■■■ - ■■ R1
34.93	42	8 000	36 800	4.6	51	524/15					✓	✓	✓	✓	✓				2KJ3310 - ■■■■■ - ■■ Q1
31.11	47	8 000	34 900	4.7	60	280/9					✓	✓	✓	✓	✓	✓			2KJ3310 - ■■■■■ - ■■ P1
27.94	52	8 000	33 100	4.7	72	1760/63					✓	✓	✓	✓	✓	✓	✓		2KJ3310 - ■■■■■ - ■■ N1
24.93	58	8 000	31 300	4.7	84	1720/69					✓	✓	✓	✓	✓	✓	✓		2KJ3310 - ■■■■■ - ■■ M1
22.22	65	8 000	29 600	4.7	98	200/9					✓	✓	✓	✓	✓	✓	✓	✓	2KJ3310 - ■■■■■ - ■■ L1
19.71	74	8 000	27 800	4.7	117	1360/69					✓	✓	✓	✓	✓	✓	✓	✓	2KJ3310 - ■■■■■ - ■■ K1
18.10	80	8 000	26 600	4.8	132	380/21					✓	✓	✓	✓	✓	✓	✓	✓	2KJ3310 - ■■■■■ - ■■ J1
15.94	91	8 000	24 900	4.8	156	1100/69							✓	✓	✓	✓	✓	✓	2KJ3310 - ■■■■■ - ■■ H1
13.08	111	7 620	23 200	4.9	212	170/13							✓	✓	✓	✓	✓	✓	2KJ3310 - ■■■■■ - ■■ G1
11.47	126	7 320	23 700	4.9	241	172/15							✓	✓	✓	✓	✓	✓	2KJ3310 - ■■■■■ - ■■ F1
8.97	162	6 770	24 500	6.2	379	260/29							✓	✓	✓	✓	✓	✓	2KJ3310 - ■■■■■ - ■■ E1
8.09	179	5 690	23 900	6.2	200	2420/299							✓	✓	✓	✓	✓	✓	2KJ3310 - ■■■■■ - ■■ D1
6.64	218	5 690	24 000	6.3	277	1122/169							✓	✓	✓	✓	✓	✓	2KJ3310 - ■■■■■ - ■■ C1
5.82	249	5 680	24 000	6.6	325	1892/325							✓	✓	✓	✓	✓	✓	2KJ3310 - ■■■■■ - ■■ B1
4.55	319	5 650	23 600	7.3	517	132/29							✓	✓	✓	✓	✓	✓	2KJ3310 - ■■■■■ - ■■ A1

[1] Only in conjunction with reduced-backlash version

© Siemens AG 2017

Selection and ordering data (continued)

i	n_2	T_{2N}	F_{R2}	φ [1]	J_G	R_{ex}	Motor frame size												Article No.
-	rpm	Nm	N	‘	10^{-4} kgm²	-	63	71	80	90	100	112	132	160	180	200	225	250	
FD.169																			
368.00	3.9	13 600	73 500	4.4	18	106240/289						✓	✓	✓					2KJ3411 - ■■■■■ - ■■ V1
343.01	4.2	13 600	73 500	4.4	19	52480/153						✓	✓	✓					2KJ3411 - ■■■■■ - ■■ U1
304.94	4.8	13 600	73 500	4.4	24	5184/17						✓	✓	✓					2KJ3411 - ■■■■■ - ■■ T1
273.80	5.3	13 600	73 500	4.4	28	51200/187						✓	✓	✓					2KJ3411 - ■■■■■ - ■■ S1
247.84	5.9	13 600	73 500	4.4	33	12640/51						✓	✓	✓					2KJ3411 - ■■■■■ - ■■ R1
217.70	6.7	13 600	73 500	4.4	40	85120/391						✓	✓	✓					2KJ3411 - ■■■■■ - ■■ Q1
197.27	7.4	13 600	73 500	4.4	46	16768/85						✓	✓	✓	✓				2KJ3411 - ■■■■■ - ■■ P1
175.69	8.3	13 600	73 500	4.4	54	8960/51						✓	✓	✓	✓	✓			2KJ3411 - ■■■■■ - ■■ N1
157.76	9.2	13 600	73 500	4.4	64	56320/357						✓	✓	✓	✓	✓	✓		2KJ3411 - ■■■■■ - ■■ M1
140.77	10	13 600	73 500	4.4	74	55040/391						✓	✓	✓	✓	✓	✓		2KJ3411 - ■■■■■ - ■■ L1
125.49	12	13 600	73 500	4.4	86	6400/51						✓	✓	✓	✓	✓	✓	✓	2KJ3411 - ■■■■■ - ■■ K1
111.30	13	13 600	73 500	4.4	101	2560/23						✓	✓	✓	✓	✓	✓	✓	2KJ3411 - ■■■■■ - ■■ J1
102.18	14	13 600	73 500	4.4	113	12160/119						✓	✓	✓	✓	✓	✓	✓	2KJ3411 - ■■■■■ - ■■ H1
90.03	16	13 600	73 500	4.4	132	35200/391							✓	✓	✓	✓	✓	✓	2KJ3411 - ■■■■■ - ■■ G1
73.85	20	13 600	71 200	4.5	176	960/13							✓	✓	✓	✓	✓	✓	2KJ3411 - ■■■■■ - ■■ F1
64.75	22	13 600	67 400	4.5	194	5504/85							✓	✓	✓	✓	✓	✓	2KJ3411 - ■■■■■ - ■■ E1
50.63	29	13 600	60 600	4.5	302	24960/493							✓	✓	✓	✓	✓	✓	2KJ3411 - ■■■■■ - ■■ D1
46.55	31	13 600	58 300	4.7	201	3026/65							✓	✓	✓	✓	✓	✓	2KJ3411 - ■■■■■ - ■■ C1
40.82	36	13 600	55 000	4.7	226	15308/375							✓	✓	✓	✓	✓	✓	2KJ3411 - ■■■■■ - ■■ B1
31.92	45	13 600	53 400	4.8	355	4628/145							✓	✓	✓	✓	✓	✓	2KJ3411 - ■■■■■ - ■■ A1
FZ.169																			
44.93	32	12 400	59 900	4.2	68	3100/69						✓	✓	✓					2KJ3311 - ■■■■■ - ■■ S1
41.07	35	13 600	55 100	4.3	80	616/15						✓	✓	✓	✓				2KJ3311 - ■■■■■ - ■■ R1
36.94	39	13 600	52 500	4.3	95	665/18						✓	✓	✓	✓	✓			2KJ3311 - ■■■■■ - ■■ Q1
33.02	44	13 600	49 800	4.4	111	2080/63						✓	✓	✓	✓	✓	✓		2KJ3311 - ■■■■■ - ■■ P1
29.86	49	13 600	47 500	4.4	133	2060/69						✓	✓	✓	✓	✓	✓		2KJ3311 - ■■■■■ - ■■ N1
26.35	55	13 600	44 700	4.4	157	1660/63						✓	✓	✓	✓	✓	✓	✓	2KJ3311 - ■■■■■ - ■■ M1
23.48	62	13 600	42 200	4.4	186	540/23						✓	✓	✓	✓	✓	✓	✓	2KJ3311 - ■■■■■ - ■■ L1
21.27	68	13 600	42 300	4.3	206	1340/63						✓	✓	✓	✓	✓	✓	✓	2KJ3311 - ■■■■■ - ■■ K1
19.13	76	13 600	42 800	4.3	249	440/23							✓	✓	✓	✓	✓	✓	2KJ3311 - ■■■■■ - ■■ J1
15.90	91	13 500	43 200	4.4	314	620/39							✓	✓	✓	✓	✓	✓	2KJ3311 - ■■■■■ - ■■ H1
14.13	103	12 900	43 200	4.4	386	212/15							✓	✓	✓	✓	✓	✓	2KJ3311 - ■■■■■ - ■■ G1
11.26	129	11 700	42 800	4.6	534	980/87							✓	✓	✓	✓	✓	✓	2KJ3311 - ■■■■■ - ■■ F1
8.97	162	10 400	41 900	4.8	710	260/29									✓	✓	✓	✓	2KJ3311 - ■■■■■ - ■■ E1
8.07	180	8 350	39 300	5.9	396	1364/169							✓	✓	✓	✓	✓	✓	2KJ3311 - ■■■■■ - ■■ D1
7.18	202	8 310	38 900	5.9	489	2332/325							✓	✓	✓	✓	✓	✓	2KJ3311 - ■■■■■ - ■■ C1
5.72	253	8 210	37 800	6.4	697	2156/377							✓	✓	✓	✓	✓	✓	2KJ3311 - ■■■■■ - ■■ B1
4.55	319	7 300	36 400	6.8	967	132/29									✓	✓	✓	✓	2KJ3311 - ■■■■■ - ■■ A1

[1] Only in conjunction with reduced-backlash version

© Siemens AG 2017

4

Selection and ordering data (continued)

i	n_2	T_{2N}	F_{R2}	φ [1]	J_G	R_{ex}	Motor frame size											Article No.
-	rpm	Nm	N	‘	10^{-4} kgm²	-	63	71	80	90	100	112	132	160	180	200	225	250	
FD.189																			
347.35	4.2	19 000	110 900	4.1	36	590499/1700						✓	✓	✓					2KJ3412 - ■■■■■ - ■■ T1
310.76	4.7	19 000	110 900	4.1	43	290563/935						✓	✓	✓					2KJ3412 - ■■■■■ - ■■ S1
280.27	5.2	19 000	110 900	4.1	49	571753/2040						✓	✓	✓					2KJ3412 - ■■■■■ - ■■ R1
247.71	5.9	19 000	110 900	4.1	61	290563/1173						✓	✓	✓					2KJ3412 - ■■■■■ - ■■ Q1
226.42	6.4	19 000	110 900	4.1	71	1443442/6375						✓	✓	✓	✓				2KJ3412 - ■■■■■ - ■■ P1
203.69	7.1	19 000	110 900	4.1	84	1246609/6120						✓	✓	✓	✓	✓			2KJ3412 - ■■■■■ - ■■ N1
182.03	8	19 000	110 900	4.1	98	139256/765						✓	✓	✓	✓	✓	✓		2KJ3412 - ■■■■■ - ■■ M1
164.61	8.8	19 000	110 900	4.1	117	965419/5865						✓	✓	✓	✓	✓	✓		2KJ3412 - ■■■■■ - ■■ L1
145.28	10	19 000	110 900	4.1	136	111137/765						✓	✓	✓	✓	✓	✓	✓	2KJ3412 - ■■■■■ - ■■ K1
129.45	11	19 000	110 900	4.1	160	253071/1955						✓	✓	✓	✓	✓	✓	✓	2KJ3412 - ■■■■■ - ■■ J1
117.27	12	19 000	110 900	4.1	175	89713/765						✓	✓	✓	✓	✓	✓	✓	2KJ3412 - ■■■■■ - ■■ H1
105.48	14	19 000	110 900	4.1	210	206206/1955							✓	✓	✓	✓	✓	✓	2KJ3412 - ■■■■■ - ■■ G1
87.65	17	19 000	108 200	4.1	258	22351/255							✓	✓	✓	✓	✓	✓	2KJ3412 - ■■■■■ - ■■ F1
77.92	19	19 000	103 200	4.1	314	496769/6375							✓	✓	✓	✓	✓	✓	2KJ3412 - ■■■■■ - ■■ E1
62.11	23	19 000	94 000	4.2	422	459277/7395							✓	✓	✓	✓	✓	✓	2KJ3412 - ■■■■■ - ■■ D1
49.43	29	19 000	85 400	4.2	533	121849/2465									✓	✓	✓	✓	2KJ3412 - ■■■■■ - ■■ C1
40.61	36	19 000	78 400	4.4	478	35329/870							✓	✓	✓	✓	✓	✓	2KJ3412 - ■■■■■ - ■■ B1
32.32	45	19 000	70 800	4.4	621	9373/290									✓	✓	✓	✓	2KJ3412 - ■■■■■ - ■■ A1
FZ.189																			
37.93	38	19 000	76 100	4.0	143	11948/315						✓	✓	✓	✓	✓	✓		2KJ3312 - ■■■■■ - ■■ L1
34.03	43	19 000	72 500	4.1	169	3914/115						✓	✓	✓	✓	✓	✓		2KJ3312 - ■■■■■ - ■■ K1
30.41	48	19 000	68 900	4.1	202	3193/105						✓	✓	✓	✓	✓	✓	✓	2KJ3312 - ■■■■■ - ■■ J1
27.17	53	19 000	65 400	4.1	241	9373/345						✓	✓	✓	✓	✓	✓	✓	2KJ3312 - ■■■■■ - ■■ H1
24.85	58	19 000	62 700	4.1	269	7828/315						✓	✓	✓	✓	✓	✓	✓	2KJ3312 - ■■■■■ - ■■ G1
22.09	66	19 000	59 300	4.1	321	7622/345							✓	✓	✓	✓	✓	✓	2KJ3312 - ■■■■■ - ■■ F1
18.75	77	19 000	54 700	4.2	410	7313/390							✓	✓	✓	✓	✓	✓	2KJ3312 - ■■■■■ - ■■ E1
16.21	89	19 000	50 800	4.2	495	6077/375							✓	✓	✓	✓	✓	✓	2KJ3312 - ■■■■■ - ■■ D1
13.26	109	17 600	48 700	4.3	687	5768/435							✓	✓	✓	✓	✓	✓	2KJ3312 - ■■■■■ - ■■ C1
10.89	133	16 300	50 000	4.4	906	4738/435									✓	✓	✓	✓	2KJ3312 - ■■■■■ - ■■ B1
8.47	171	14 700	50 400	4.8	1 333	3811/450												✓	2KJ3312 - ■■■■■ - ■■ A1

[1] Only in conjunction with reduced-backlash version

© Siemens AG 2017

Selection and ordering data

i	n_2	T_{2N}	F_{R2}	φ [1]	J_G	R_{ex}	Motor frame size								Article No.
-	rpm	Nm	N	‘	10^{-4} kgm²	-	63	71	80	90	100	112	132	160	
FZ.29-D19															
8 237	0.18	150	5 220	-	0.03	93697098/11375	✓	✓							**2KJ3321 - ■■■■■ - ■■ P1**
7 157	0.20	150	5 220	-	0.04	81408954/11375	✓	✓							**2KJ3321 - ■■■■■ - ■■ N1**
6 506	0.22	150	5 220	-	0.04	14801628/2275	✓	✓							**2KJ3321 - ■■■■■ - ■■ M1**
5 536	0.26	150	5 220	-	0.06	62976738/11375	✓	✓							**2KJ3321 - ■■■■■ - ■■ L1**
5 033	0.29	150	5 220	-	0.07	11450316/2275	✓	✓							**2KJ3321 - ■■■■■ - ■■ K1**
4 389	0.33	150	5 220	-	0.08	768009/175	✓	✓							**2KJ3321 - ■■■■■ - ■■ J1**
3 928	0.37	150	5 220	-	0.11	8936832/2275	✓	✓							**2KJ3321 - ■■■■■ - ■■ H1**
3 488	0.42	150	5 220	-	0.13	7936093/2275	✓	✓							**2KJ3321 - ■■■■■ - ■■ G1**
3 220	0.45	150	5 220	-	0.16	95233116/29575	✓	✓							**2KJ3321 - ■■■■■ - ■■ F1**
2 797	0.52	150	5 220	-	0.17	44544522/15925	✓	✓							**2KJ3321 - ■■■■■ - ■■ E1**
2 431	0.60	150	5 220	-	0.18	27648324/11375	✓	✓							**2KJ3321 - ■■■■■ - ■■ D1**
2 194	0.66	150	5 220	-	0.22	768009/350	✓	✓							**2KJ3321 - ■■■■■ - ■■ C1**
2 065	0.70	150	5 220	-	0.26	361416/175	✓	✓							**2KJ3321 - ■■■■■ - ■■ B1**
1 800	0.81	150	5 220	-	0.29	4096048/2275	✓	✓							**2KJ3321 - ■■■■■ - ■■ A1**
FZ.29-Z19															
1 760	0.82	150	5 220	-	0.02	1715912/975	✓	✓							**2KJ3320 - ■■■■■ - ■■ R1**
1 558	0.93	150	5 220	-	0.03	2532354/1625	✓	✓	✓						**2KJ3320 - ■■■■■ - ■■ Q1**
1 354	1.1	150	5 220	-	0.04	2200242/1625	✓	✓	✓						**2KJ3320 - ■■■■■ - ■■ P1**
1 231	1.2	150	5 220	-	0.05	400044/325	✓	✓	✓						**2KJ3320 - ■■■■■ - ■■ N1**
1 047	1.4	150	5 220	-	0.07	1702074/1625	✓	✓	✓						**2KJ3320 - ■■■■■ - ■■ M1**
952	1.5	150	5 220	-	0.08	309468/325	✓	✓	✓						**2KJ3320 - ■■■■■ - ■■ L1**
830	1.7	150	5 220	-	0.09	20757/25	✓	✓	✓						**2KJ3320 - ■■■■■ - ■■ K1**
743	2	150	5 220	-	0.12	241536/325	✓	✓	✓						**2KJ3320 - ■■■■■ - ■■ J1**
660	2.2	150	5 220	-	0.15	214489/325	✓	✓	✓						**2KJ3320 - ■■■■■ - ■■ H1**
609	2.4	150	5 220	-	0.18	2573868/4225	✓	✓	✓						**2KJ3320 - ■■■■■ - ■■ G1**
529	2.7	150	5 220	-	0.2	1203906/2275	✓	✓	✓						**2KJ3320 - ■■■■■ - ■■ F1**
460	3.2	150	5 220	-	0.21	747252/1625	✓	✓	✓						**2KJ3320 - ■■■■■ - ■■ E1**
415	3.5	150	5 220	-	0.27	20757/50	✓	✓	✓						**2KJ3320 - ■■■■■ - ■■ D1**
391	3.7	150	5 220	-	0.32	9768/25	✓	✓	✓						**2KJ3320 - ■■■■■ - ■■ C1**
340.63	4.3	150	5 220	-	0.36	110704/325	✓	✓	✓						**2KJ3320 - ■■■■■ - ■■ B1**
314.27	4.6	150	5 220	-	0.19	428978/1365	✓	✓	✓						**2KJ3320 - ■■■■■ - ■■ A1**

[1] Only in conjunction with reduced-backlash version

© Siemens AG 2017

4

Selection and ordering data (continued)

i	n_2	T_{2N}	F_{R2}	φ [1]	J_G	R_{ex}	Motor frame size								Article No.
-	rpm	Nm	N	‘	10^{-4} kgm²	-	63	71	80	90	100	112	132	160	
FZ.39-D19															
8 247	0.18	230	6 040	-	0.04	262670067/31850	✓	✓							**2KJ3323 - ■■■■■ - ■■ N1**
7 497	0.19	230	6 040	-	0.04	23879097/3185	✓	✓							**2KJ3323 - ■■■■■ - ■■ M1**
6 380	0.23	230	6 040	-	0.06	203197599/31850	✓	✓							**2KJ3323 - ■■■■■ - ■■ L1**
5 800	0.25	230	6 040	-	0.07	18472509/3185	✓	✓							**2KJ3323 - ■■■■■ - ■■ K1**
5 057	0.29	230	6 040	-	0.08	4956039/980	✓	✓							**2KJ3323 - ■■■■■ - ■■ J1**
4 527	0.32	230	6 040	-	0.11	14417568/3185	✓	✓							**2KJ3323 - ■■■■■ - ■■ H1**
4 020	0.36	230	6 040	-	0.13	51212403/12740	✓	✓							**2KJ3323 - ■■■■■ - ■■ G1**
3 711	0.39	230	6 040	-	0.16	153637209/41405	✓	✓							**2KJ3323 - ■■■■■ - ■■ F1**
3 223	0.45	230	6 040	-	0.17	143725131/44590	✓	✓							**2KJ3323 - ■■■■■ - ■■ E1**
2 801	0.52	230	6 040	-	0.18	44604351/15925	✓	✓							**2KJ3323 - ■■■■■ - ■■ D1**
2 529	0.57	230	6 040	-	0.22	4956039/1960	✓	✓							**2KJ3323 - ■■■■■ - ■■ C1**
2 380	0.61	230	6 040	-	0.26	9912078/4165	✓	✓							**2KJ3323 - ■■■■■ - ■■ B1**
2 075	0.7	230	6 040	-	0.29	6608052/3185	✓	✓							**2KJ3323 - ■■■■■ - ■■ A1**
FZ.39-Z19															
2 028	0.71	230	6 040	-	0.02	922746/455	✓	✓							**2KJ3322 - ■■■■■ - ■■ T1**
1 796	0.81	230	6 040	-	0.03	8170767/4550	✓	✓	✓						**2KJ3322 - ■■■■■ - ■■ S1**
1 560	0.93	230	6 040	-	0.04	7099191/4550	✓	✓	✓						**2KJ3322 - ■■■■■ - ■■ R1**
1 418	1.0	230	6 040	-	0.05	645381/455	✓	✓	✓						**2KJ3322 - ■■■■■ - ■■ Q1**
1 207	1.2	230	6 040	-	0.07	5491827/4550	✓	✓	✓						**2KJ3322 - ■■■■■ - ■■ P1**
1 097	1.3	230	6 040	-	0.08	499257/455	✓	✓	✓						**2KJ3322 - ■■■■■ - ■■ N1**
957	1.5	230	6 040	-	0.09	133947/140	✓	✓	✓						**2KJ3322 - ■■■■■ - ■■ M1**
856	1.7	230	6 040	-	0.12	389664/455	✓	✓	✓						**2KJ3322 - ■■■■■ - ■■ L1**
761	1.9	230	6 040	-	0.15	1384119/1820	✓	✓	✓						**2KJ3322 - ■■■■■ - ■■ K1**
702	2.1	230	6 040	-	0.18	4152357/5915	✓	✓	✓						**2KJ3322 - ■■■■■ - ■■ J1**
610	2.4	230	6 040	-	0.2	3884463/6370	✓	✓	✓						**2KJ3322 - ■■■■■ - ■■ H1**
530	2.7	230	6 040	-	0.21	1205523/2275	✓	✓	✓						**2KJ3322 - ■■■■■ - ■■ G1**
478	3.0	230	6 040	-	0.27	133947/280	✓	✓	✓						**2KJ3322 - ■■■■■ - ■■ F1**
450	3.2	230	6 040	-	0.32	267894/595	✓	✓	✓						**2KJ3322 - ■■■■■ - ■■ E1**
393	3.7	230	6 040	-	0.36	178596/455	✓	✓	✓						**2KJ3322 - ■■■■■ - ■■ D1**
362	4.0	230	6 040	-	0.19	461373/1274	✓	✓	✓						**2KJ3322 - ■■■■■ - ■■ C1**
314.58	4.6	230	6 040	-	0.22	431607/1372	✓	✓	✓						**2KJ3322 - ■■■■■ - ■■ B1**
273.36	5.3	230	6 040	-	0.23	133947/490	✓	✓	✓						**2KJ3322 - ■■■■■ - ■■ A1**

[1] Only in conjunction with reduced-backlash version

© Siemens AG 2017

Selection and ordering data (continued)

i	n_2	T_{2N}	F_{R2}	φ [1]	J_G	R_{ex}	Motor frame size								Article No.
-	rpm	Nm	N	‘	10^{-4} kgm²	-	63	71	80	90	100	112	132	160	
FD.49-D19															
14 685	0.10	480	7 960	-	0.07	14699730/1001	✓	✓							**2KJ3425 - ■■■■■ - ■■ C1**
12 805	0.11	480	7 960	-	0.08	179265/14	✓	✓							**2KJ3425 - ■■■■■ - ■■ B1**
11 461	0.13	480	7 960	-	0.11	11472960/1001	✓	✓							**2KJ3425 - ■■■■■ - ■■ A1**
FD.49-Z19															
752	1.9	480	7 960	-	0.21	3762/5	✓	✓	✓						**2KJ3424 - ■■■■■ - ■■ J1**
679	2.1	480	7 960	-	0.28	2717/4	✓	✓	✓						**2KJ3424 - ■■■■■ - ■■ H1**
639	2.3	480	7 960	-	0.32	10868/17	✓	✓	✓						**2KJ3424 - ■■■■■ - ■■ G1**
557	2.6	480	7 960	-	0.37	1672/3	✓	✓	✓						**2KJ3424 - ■■■■■ - ■■ F1**
514	2.8	480	7 960	-	0.20	32395/63	✓	✓	✓						**2KJ3424 - ■■■■■ - ■■ E1**
447	3.2	480	7 960	-	0.23	393965/882	✓	✓	✓						**2KJ3424 - ■■■■■ - ■■ D1**
388	3.7	480	7 960	-	0.25	2717/7	✓	✓	✓						**2KJ3424 - ■■■■■ - ■■ C1**
350	4.1	480	7 960	-	0.32	176605/504	✓	✓	✓						**2KJ3424 - ■■■■■ - ■■ B1**
329.79	4.4	480	7 960	-	0.37	353210/1071	✓	✓	✓						**2KJ3424 - ■■■■■ - ■■ A1**
FZ.49-D19															
11 357	0.13	480	7 960	-	0.02	46506262/4095	✓	✓							**2KJ3325 - ■■■■■ - ■■ Q1**
10 056	0.14	480	7 960	-	0.03	45756161/4550	✓	✓							**2KJ3325 - ■■■■■ - ■■ P1**
8 737	0.17	480	7 960	-	0.04	39755353/4550	✓	✓							**2KJ3325 - ■■■■■ - ■■ N1**
7 943	0.18	480	7 960	-	0.04	3614123/455	✓	✓							**2KJ3325 - ■■■■■ - ■■ M1**
6 759	0.21	480	7 960	-	0.06	30754141/4550	✓	✓							**2KJ3325 - ■■■■■ - ■■ L1**
6 145	0.24	480	7 960	-	0.07	2795831/455	✓	✓							**2KJ3325 - ■■■■■ - ■■ K1**
5 358	0.27	480	7 960	-	0.08	750101/140	✓	✓							**2KJ3325 - ■■■■■ - ■■ J1**
4 796	0.3	480	7 960	-	0.11	2182112/455	✓	✓							**2KJ3325 - ■■■■■ - ■■ H1**
4 259	0.34	480	7 960	-	0.13	23253131/5460	✓	✓							**2KJ3325 - ■■■■■ - ■■ G1**
3 931	0.37	480	7 960	-	0.16	23253131/5915	✓	✓							**2KJ3325 - ■■■■■ - ■■ F1**
3 415	0.42	480	7 960	-	0.17	21752929/6370	✓	✓							**2KJ3325 - ■■■■■ - ■■ E1**
2 967	0.49	480	7 960	-	0.18	6750909/2275	✓	✓							**2KJ3325 - ■■■■■ - ■■ D1**
2 679	0.54	480	7 960	-	0.22	750101/280	✓	✓							**2KJ3325 - ■■■■■ - ■■ C1**
2 521	0.58	480	7 960	-	0.26	1500202/595	✓	✓							**2KJ3325 - ■■■■■ - ■■ B1**
2 198	0.66	480	7 960	-	0.29	3000404/1365	✓	✓							**2KJ3325 - ■■■■■ - ■■ A1**
FZ.49-Z19															
2 149	0.67	480	7 960	-	0.02	1256926/585	✓	✓	✓						**2KJ3324 - ■■■■■ - ■■ J1**
1 903	0.76	480	7 960	-	0.03	1236653/650	✓	✓	✓						**2KJ3324 - ■■■■■ - ■■ H1**
1 653	0.88	480	7 960	-	0.04	1074469/650	✓	✓	✓						**2KJ3324 - ■■■■■ - ■■ G1**
1 503	0.96	480	7 960	-	0.05	97679/65	✓	✓	✓						**2KJ3324 - ■■■■■ - ■■ F1**
1 279	1.1	480	7 960	-	0.07	831193/650	✓	✓	✓						**2KJ3324 - ■■■■■ - ■■ E1**
1 163	1.2	480	7 960	-	0.08	75563/65	✓	✓	✓						**2KJ3324 - ■■■■■ - ■■ D1**
1 014	1.4	480	7 960	-	0.09	20273/20	✓	✓	✓						**2KJ3324 - ■■■■■ - ■■ C1**
907	1.6	480	7 960	-	0.13	58976/65	✓	✓	✓						**2KJ3324 - ■■■■■ - ■■ B1**
806	1.8	480	7 960	-	0.15	628463/780	✓	✓	✓						**2KJ3324 - ■■■■■ - ■■ A1**

[1] Only in conjunction with reduced-backlash version

© Siemens AG 2017

4

Selection and ordering data (continued)

i	n_2	T_{2N}	F_{R2}	φ[1]	J_G	R_{ex}	Motor frame size								Article No.
-	rpm	Nm	N	‘	10^{-4} kgm²	-	63	71	80	90	100	112	132	160	
FD.69-D19															
13 479	0.11	600	10 800	-	0.08	94350/7	✓	✓							**2KJ3427 - ■■■■■ - ■■ B1**
12 065	0.12	600	10 800	-	0.11	12076800/1001	✓	✓							**2KJ3427 - ■■■■■ - ■■ A1**
FD.69-Z19															
1 200	1.2	600	10 800	-	0.32	1200/1	✓	✓	✓						**2KJ3426 - ■■■■■ - ■■ M1**
1 046	1.4	600	10 800	-	0.37	13600/13	✓	✓	✓						**2KJ3426 - ■■■■■ - ■■ L1**
965	1.5	600	10 800	-	0.19	263500/273	✓	✓	✓						**2KJ3426 - ■■■■■ - ■■ K1**
838	1.7	600	10 800	-	0.22	123250/147	✓	✓	✓						**2KJ3426 - ■■■■■ - ■■ J1**
729	2.0	600	10 800	-	0.23	5100/7	✓	✓	✓						**2KJ3426 - ■■■■■ - ■■ H1**
658	2.2	600	10 800	-	0.30	27625/42	✓	✓	✓						**2KJ3426 - ■■■■■ - ■■ G1**
619	2.3	600	10 800	-	0.35	13000/21	✓	✓	✓						**2KJ3426 - ■■■■■ - ■■ F1**
587	2.5	600	10 800	-	0.37	1760/3	✓	✓	✓						**2KJ3426 - ■■■■■ - ■■ E1**
541	2.7	600	10 800	-	0.20	34100/63	✓	✓	✓						**2KJ3426 - ■■■■■ - ■■ D1**
470	3.1	600	10 800	-	0.23	207350/441	✓	✓	✓						**2KJ3426 - ■■■■■ - ■■ C1**
409	3.5	600	10 800	-	0.25	2860/7	✓	✓	✓						**2KJ3426 - ■■■■■ - ■■ B1**
369	3.9	600	10 800	-	0.32	46475/126	✓	✓	✓						**2KJ3426 - ■■■■■ - ■■ A1**
FZ.69-D19															
11 955	0.12	600	10 800	-	0.02	9790792/819	✓	✓							**2KJ3327 - ■■■■■ - ■■ Q1**
10 586	0.14	600	10 800	-	0.03	4816438/455	✓	✓							**2KJ3327 - ■■■■■ - ■■ P1**
9 197	0.16	600	10 800	-	0.04	4184774/455	✓	✓							**2KJ3327 - ■■■■■ - ■■ N1**
8 361	0.17	600	10 800	-	0.04	760868/91	✓	✓							**2KJ3327 - ■■■■■ - ■■ M1**
7 115	0.20	600	10 800	-	0.06	3237278/455	✓	✓							**2KJ3327 - ■■■■■ - ■■ L1**
6 468	0.22	600	10 800	-	0.07	588596/91	✓	✓							**2KJ3327 - ■■■■■ - ■■ K1**
5 640	0.26	600	10 800	-	0.08	39479/7	✓	✓							**2KJ3327 - ■■■■■ - ■■ J1**
5 048	0.29	600	10 800	-	0.11	459392/91	✓	✓							**2KJ3327 - ■■■■■ - ■■ H1**
4 483	0.32	600	10 800	-	0.13	1223849/273	✓	✓							**2KJ3327 - ■■■■■ - ■■ G1**
4 138	0.35	600	10 800	-	0.16	4895396/1183	✓	✓							**2KJ3327 - ■■■■■ - ■■ F1**
3 595	0.4	600	10 800	-	0.17	2289782/637	✓	✓							**2KJ3327 - ■■■■■ - ■■ E1**
3 124	0.46	600	10 800	-	0.18	1421244/455	✓	✓							**2KJ3327 - ■■■■■ - ■■ D1**
2 820	0.51	600	10 800	-	0.22	39479/14	✓	✓							**2KJ3327 - ■■■■■ - ■■ C1**
2 654	0.55	600	10 800	-	0.26	315832/119	✓	✓							**2KJ3327 - ■■■■■ - ■■ B1**
2 314	0.63	600	10 800	-	0.29	631664/273	✓	✓							**2KJ3327 - ■■■■■ - ■■ A1**
FZ.69-Z19															
2 262	0.64	600	10 800	-	0.02	264616/117	✓	✓							**2KJ3326 - ■■■■■ - ■■ F1**
2 003	0.72	600	10 800	-	0.03	130174/65	✓	✓	✓						**2KJ3326 - ■■■■■ - ■■ E1**
1 740	0.83	600	10 800	-	0.04	113102/65	✓	✓	✓						**2KJ3326 - ■■■■■ - ■■ D1**
1 582	0.92	600	10 800	-	0.05	20564/13	✓	✓	✓						**2KJ3326 - ■■■■■ - ■■ C1**
1 346	1.1	600	10 800	-	0.07	87494/65	✓	✓	✓						**2KJ3326 - ■■■■■ - ■■ B1**
1 224	1.2	600	10 800	-	0.08	15908/13	✓	✓	✓						**2KJ3326 - ■■■■■ - ■■ A1**

[1] Only in conjunction with reduced-backlash version

© Siemens AG 2017

Selection and ordering data (continued)

i	n_2	T_{2N}	F_{R2}	φ [1]	J_G	R_{ex}	Motor frame size								Article No.
-	rpm	Nm	N	‘	10^{-4} kgm²	-	63	71	80	90	100	112	132	160	
FD.79-D39															
17 865	0.08	1 000	13 600	-	0.08	583103521/32640	✓	✓	✓	✓					**2KJ3430 - ■■■■■ - ■■ E1**
16 241	0.09	1 000	13 600	-	0.10	53009411/3264	✓	✓	✓	✓					**2KJ3430 - ■■■■■ - ■■ D1**
14 240	0.10	1 000	13 600	-	0.12	278875597/19584	✓	✓	✓	✓	✓	✓			**2KJ3430 - ■■■■■ - ■■ C1**
12 710	0.11	1 000	13 600	-	0.15	6914271/544	✓	✓	✓	✓	✓	✓			**2KJ3430 - ■■■■■ - ■■ B1**
11 327	0.13	1 000	13 600	-	0.17	887331445/78336	✓	✓	✓	✓	✓	✓			**2KJ3430 - ■■■■■ - ■■ A1**
FZ.79-D39															
11 301	0.13	1 000	13 600	-	0.03	155608271/13770	✓	✓							**2KJ3330 - ■■■■■ - ■■ N1**
10 023	0.14	1 000	13 600	-	0.05	6765577/675	✓	✓							**2KJ3330 - ■■■■■ - ■■ M1**
8 696	0.17	1 000	13 600	-	0.05	399169043/45900	✓	✓							**2KJ3330 - ■■■■■ - ■■ L1**
7 906	0.18	1 000	13 600	-	0.07	399169043/50490	✓	✓	✓	✓					**2KJ3330 - ■■■■■ - ■■ K1**
6 780	0.21	1 000	13 600	-	0.08	155608271/22950	✓	✓	✓	✓					**2KJ3330 - ■■■■■ - ■■ J1**
6 164	0.24	1 000	13 600	-	0.10	155608271/25245	✓	✓	✓	✓					**2KJ3330 - ■■■■■ - ■■ H1**
5 405	0.27	1 000	13 600	-	0.12	74421347/13770	✓	✓	✓	✓	✓	✓			**2KJ3330 - ■■■■■ - ■■ G1**
4 824	0.30	1 000	13 600	-	0.15	13531154/2805	✓	✓	✓	✓	✓	✓			**2KJ3330 - ■■■■■ - ■■ F1**
4 299	0.34	1 000	13 600	-	0.17	47359039/11016	✓	✓	✓	✓	✓	✓			**2KJ3330 - ■■■■■ - ■■ E1**
3 968	0.37	1 000	13 600	-	0.21	3643003/918	✓	✓	✓	✓	✓	✓			**2KJ3330 - ■■■■■ - ■■ D1**
3 474	0.42	1 000	13 600	-	0.25	10631621/3060	✓	✓	✓	✓	✓	✓			**2KJ3330 - ■■■■■ - ■■ C1**
3 046	0.48	1 000	13 600	-	0.23	209732887/68850	✓	✓	✓	✓	✓	✓			**2KJ3330 - ■■■■■ - ■■ B1**
2 764	0.52	1 000	13 600	-	0.33	6765577/2448	✓	✓	✓	✓	✓	✓			**2KJ3330 - ■■■■■ - ■■ A1**
FZ.79-Z39															
2 687	0.54	1 000	13 600	-	0.06	13059137/4860	✓	✓							**2KJ3328 - ■■■■■ - ■■ S2**
2 389	0.61	1 000	13 600	-	0.07	6450899/2700	✓	✓	✓	✓					**2KJ3328 - ■■■■■ - ■■ R1**
2 098	0.69	1 000	13 600	-	0.08	157339/75	✓	✓	✓	✓					**2KJ3328 - ■■■■■ - ■■ Q1**
1 907	0.76	1 000	13 600	-	0.10	314678/165	✓	✓	✓	✓					**2KJ3328 - ■■■■■ - ■■ P1**
1 632	0.89	1 000	13 600	-	0.12	1101373/675	✓	✓	✓	✓					**2KJ3328 - ■■■■■ - ■■ N1**
1 483	0.98	1 000	13 600	-	0.14	2202746/1485	✓	✓	✓	✓					**2KJ3328 - ■■■■■ - ■■ M1**
1 311	1.1	1 000	13 600	-	0.17	157339/120	✓	✓	✓	✓	✓	✓			**2KJ3328 - ■■■■■ - ■■ L1**
1 192	1.2	1 000	13 600	-	0.22	157339/132	✓	✓	✓	✓	✓	✓			**2KJ3328 - ■■■■■ - ■■ K1**
1 044	1.4	1 000	13 600	-	0.26	6765577/6480	✓	✓	✓	✓	✓	✓			**2KJ3328 - ■■■■■ - ■■ J1**
964	1.5	1 000	13 600	-	0.31	520429/540	✓	✓	✓	✓	✓	✓			**2KJ3328 - ■■■■■ - ■■ H1**
853	1.7	1 000	13 600	-	0.36	921557/1080	✓	✓	✓	✓	✓	✓			**2KJ3328 - ■■■■■ - ■■ G1**
710	2.0	1 000	13 600	-	0.48	2045407/2880	✓	✓	✓	✓	✓	✓			**2KJ3328 - ■■■■■ - ■■ F1**
668	2.2	1 000	13 600	-	0.56	2045407/3060	✓	✓	✓	✓	✓	✓			**2KJ3328 - ■■■■■ - ■■ E1**
599	2.4	1 000	13 600	-	0.61	5821543/9720	✓	✓	✓	✓	✓	✓			**2KJ3328 - ■■■■■ - ■■ D1**
510	2.8	1 000	13 600	-	0.79	1101373/2160	✓	✓	✓	✓	✓	✓			**2KJ3328 - ■■■■■ - ■■ C1**
437	3.3	1 000	13 600	-	1.03	157339/360			✓	✓	✓	✓			**2KJ3328 - ■■■■■ - ■■ B1**
376	3.9	1 000	13 600	-	1.31	4877509/12960			✓	✓	✓	✓			**2KJ3328 - ■■■■■ - ■■ A1**

[1] Only in conjunction with reduced-backlash version

© Siemens AG 2017

4

Selection and ordering data (continued)

i	n_2	T_{2N}	F_{R2}	φ [1]	J_G	R_{ex}	Motor frame size								Article No.
-	rpm	Nm	N	‘	10^{-4} kgm²	-	63	71	80	90	100	112	132	160	
FD.89-D39															
17 750	0.08	1 850	17 400	-	0.12	15389528/867	✓	✓	✓	✓	✓	✓			**2KJ3432 - ■■■■■ - ■■ B1**
15 843	0.09	1 850	17 400	-	0.15	50365728/3179	✓	✓	✓	✓	✓	✓			**2KJ3432 - ■■■■■ - ■■ A1**
FD.89-Z39															
648	2.2	1 850	17 400	-	0.75	47389680/73117	✓	✓	✓	✓	✓	✓			**2KJ3431 - ■■■■■ - ■■ E1**
581	2.5	1 850	17 400	-	0.85	7493240/12903	✓	✓	✓	✓	✓	✓			**2KJ3431 - ■■■■■ - ■■ D1**
494	2.9	1 850	17 400	-	1.12	2126460/4301	✓	✓	✓	✓	✓	✓			**2KJ3431 - ■■■■■ - ■■ C1**
424	3.4	1 850	17 400	-	1.48	1822680/4301			✓	✓	✓	✓			**2KJ3431 - ■■■■■ - ■■ B1**
365	4	1 850	17 400	-	1.91	1569530/4301			✓	✓	✓	✓			**2KJ3431 - ■■■■■ - ■■ A1**
FZ.89-D39															
14 522	0.1	1 850	17 400	-	0.03	33327322/2295	✓	✓							**2KJ3332 - ■■■■■ - ■■ N1**
12 880	0.11	1 850	17 400	-	0.05	2898028/225	✓	✓							**2KJ3332 - ■■■■■ - ■■ M1**
11 175	0.13	1 850	17 400	-	0.05	42745913/3825	✓	✓							**2KJ3332 - ■■■■■ - ■■ L1**
10 159	0.14	1 850	17 400	-	0.07	85491826/8415	✓	✓	✓	✓					**2KJ3332 - ■■■■■ - ■■ K1**
8 713	0.17	1 850	17 400	-	0.08	33327322/3825	✓	✓	✓	✓					**2KJ3332 - ■■■■■ - ■■ J1**
7 921	0.18	1 850	17 400	-	0.10	66654644/8415	✓	✓	✓	✓					**2KJ3332 - ■■■■■ - ■■ H1**
6 945	0.21	1 850	17 400	-	0.12	15939154/2295	✓	✓	✓	✓	✓	✓			**2KJ3332 - ■■■■■ - ■■ G1**
6 299	0.23	1 850	17 400	-	0.15	5796056/935	✓	✓	✓	✓	✓	✓			**2KJ3332 - ■■■■■ - ■■ F1**
5 525	0.26	1 850	17 400	-	0.17	5071549/918	✓	✓	✓	✓	✓	✓			**2KJ3332 - ■■■■■ - ■■ E1**
5 100	0.28	1 850	17 400	-	0.21	10143098/1989	✓	✓	✓	✓	✓	✓			**2KJ3332 - ■■■■■ - ■■ D1**
4 465	0.32	1 850	17 400	-	0.25	1138511/255	✓	✓	✓	✓	✓	✓			**2KJ3332 - ■■■■■ - ■■ C1**
3 915	0.37	1 850	17 400	-	0.23	44919434/11475	✓	✓	✓	✓	✓	✓			**2KJ3332 - ■■■■■ - ■■ B1**
3 552	0.41	1 850	17 400	-	0.33	724507/204	✓	✓	✓	✓	✓	✓			**2KJ3332 - ■■■■■ - ■■ A1**
FZ.89-Z39															
3 453	0.42	1 850	17 400	-	0.06	1398467/405	✓	✓							**2KJ3331 - ■■■■■ - ■■ P1**
3 070	0.47	1 850	17 400	-	0.07	690809/225	✓	✓	✓	✓					**2KJ3331 - ■■■■■ - ■■ N1**
2 696	0.54	1 850	17 400	-	0.08	67396/25	✓	✓	✓	✓					**2KJ3331 - ■■■■■ - ■■ M1**
2 451	0.59	1 850	17 400	-	0.10	134792/55	✓	✓	✓	✓					**2KJ3331 - ■■■■■ - ■■ L1**
2 097	0.69	1 850	17 400	-	0.12	471772/225	✓	✓	✓	✓					**2KJ3331 - ■■■■■ - ■■ K1**
1 906	0.76	1 850	17 400	-	0.14	943544/495	✓	✓	✓	✓					**2KJ3331 - ■■■■■ - ■■ J1**
1 685	0.86	1 850	17 400	-	0.17	16849/10	✓	✓	✓	✓	✓	✓			**2KJ3331 - ■■■■■ - ■■ H1**
1 532	0.95	1 850	17 400	-	0.22	16849/11	✓	✓	✓	✓	✓	✓			**2KJ3331 - ■■■■■ - ■■ G1**
1 342	1.1	1 850	17 400	-	0.26	724507/540	✓	✓	✓	✓	✓	✓			**2KJ3331 - ■■■■■ - ■■ F1**
1 238	1.2	1 850	17 400	-	0.31	724507/585	✓	✓	✓	✓	✓	✓			**2KJ3331 - ■■■■■ - ■■ E1**
1 097	1.3	1 850	17 400	-	0.36	98687/90	✓	✓	✓	✓	✓	✓			**2KJ3331 - ■■■■■ - ■■ D1**
913	1.6	1 850	17 400	-	0.48	219037/240	✓	✓	✓	✓	✓	✓			**2KJ3331 - ■■■■■ - ■■ C1**
859	1.7	1 850	17 400	-	0.56	219037/255	✓	✓	✓	✓	✓	✓			**2KJ3331 - ■■■■■ - ■■ B1**
770	1.9	1 850	17 400	-	0.61	623413/810	✓	✓	✓	✓	✓	✓			**2KJ3331 - ■■■■■ - ■■ A1**

[1] Only in conjunction with reduced-backlash version

© Siemens AG 2017

Selection and ordering data (continued)

i	n_2	T_{2N}	F_{R2}	φ[1]	J_G	R_{ex}	Motor frame size								Article No.
-	rpm	Nm	N	‘	10^{-4} kgm²	-	63	71	80	90	100	112	132	160	
FD.109-D39															
22 701	0.06	3 100	25 000	-	0.05	5286392566/232875	✓	✓							**2KJ3434 - ■■■■■ - ■■ L1**
20 637	0.07	3 100	25 000	-	0.07	10572785132/512325	✓	✓	✓	✓					**2KJ3434 - ■■■■■ - ■■ K1**
17 699	0.08	3 100	25 000	-	0.08	179199748/10125	✓	✓	✓	✓					**2KJ3434 - ■■■■■ - ■■ J1**
16 090	0.09	3 100	25 000	-	0.10	358399496/22275	✓	✓	✓	✓					**2KJ3434 - ■■■■■ - ■■ H1**
14 108	0.10	3 100	25 000	-	0.12	1971197228/139725	✓	✓	✓	✓	✓	✓			**2KJ3434 - ■■■■■ - ■■ G1**
12 592	0.12	3 100	25 000	-	0.15	716798992/56925	✓	✓	✓	✓	✓	✓			**2KJ3434 - ■■■■■ - ■■ F1**
11 222	0.13	3 100	25 000	-	0.18	313599559/27945	✓	✓	✓	✓	✓	✓			**2KJ3434 - ■■■■■ - ■■ E1**
10 359	0.14	3 100	25 000	-	0.21	96492172/9315	✓	✓	✓	✓	✓	✓			**2KJ3434 - ■■■■■ - ■■ D1**
9 069	0.16	3 100	25 000	-	0.25	140799802/15525	✓	✓	✓	✓	✓	✓			**2KJ3434 - ■■■■■ - ■■ C1**
7 952	0.18	3 100	25 000	-	0.23	5555192188/698625	✓	✓	✓	✓	✓	✓			**2KJ3434 - ■■■■■ - ■■ B1**
7 214	0.2	3 100	25 000	-	0.33	44799937/6210	✓	✓	✓	✓	✓	✓			**2KJ3434 - ■■■■■ - ■■ A1**
FD.109-Z39															
7 014	0.21	3 100	25 000	-	0.06	2940126098/419175	✓	✓							**2KJ3433 - ■■■■■ - ■■ A2**
6 237	0.23	3 100	25 000	-	0.07	1452351446/232875	✓	✓	✓	✓					**2KJ3433 - ■■■■■ - ■■ X1**
5 476	0.26	3 100	25 000	-	0.09	141692824/25875	✓	✓	✓	✓					**2KJ3433 - ■■■■■ - ■■ W1**
4 978	0.29	3 100	25 000	-	0.10	283385648/56925	✓	✓	✓	✓					**2KJ3433 - ■■■■■ - ■■ V1**
4 259	0.34	3 100	25 000	-	0.12	991849768/232875	✓	✓	✓	✓					**2KJ3433 - ■■■■■ - ■■ U1**
3 872	0.37	3 100	25 000	-	0.15	1983699536/512325	✓	✓	✓	✓					**2KJ3433 - ■■■■■ - ■■ T1**
3 423	0.42	3 100	25 000	-	0.17	17711603/5175	✓	✓	✓	✓	✓	✓			**2KJ3433 - ■■■■■ - ■■ S1**
3 111	0.47	3 100	25 000	-	0.23	35423206/11385	✓	✓	✓	✓	✓	✓			**2KJ3433 - ■■■■■ - ■■ R1**
2 725	0.53	3 100	25 000	-	0.27	761598929/279450	✓	✓	✓	✓	✓	✓			**2KJ3433 - ■■■■■ - ■■ Q1**
2 516	0.58	3 100	25 000	-	0.32	117169066/46575	✓	✓	✓	✓	✓	✓			**2KJ3433 - ■■■■■ - ■■ P1**
2 227	0.65	3 100	25 000	-	0.38	103739389/46575	✓	✓	✓	✓	✓	✓			**2KJ3433 - ■■■■■ - ■■ N1**
1 854	0.78	3 100	25 000	-	0.50	230250839/124200	✓	✓	✓	✓	✓	✓			**2KJ3433 - ■■■■■ - ■■ M1**
1 745	0.83	3 100	25 000	-	0.59	27088334/15525	✓	✓	✓	✓	✓	✓			**2KJ3433 - ■■■■■ - ■■ L1**
1 563	0.93	3 100	25 000	-	0.64	655329311/419175	✓	✓	✓	✓	✓	✓			**2KJ3433 - ■■■■■ - ■■ K1**
1 331	1.1	3 100	25 000	-	0.84	123981221/93150	✓	✓	✓	✓	✓	✓			**2KJ3433 - ■■■■■ - ■■ J1**
1 141	1.3	3 100	25 000	-	1.10	17711603/15525	✓	✓	✓	✓	✓	✓			**2KJ3433 - ■■■■■ - ■■ H1**
982	1.5	3 100	25 000	-	1.40	549059693/558900	✓	✓	✓	✓	✓	✓			**2KJ3433 - ■■■■■ - ■■ G1**
810	1.8	3 100	25 000	-	0.73	154343969/190440	✓	✓	✓	✓	✓	✓			**2KJ3433 - ■■■■■ - ■■ F1**
763	1.9	3 100	25 000	-	0.84	18158114/23805	✓	✓	✓	✓	✓	✓			**2KJ3433 - ■■■■■ - ■■ E1**
683	2.1	3 100	25 000	-	0.96	439286681/642735	✓	✓	✓	✓	✓	✓			**2KJ3433 - ■■■■■ - ■■ D1**
582	2.5	3 100	25 000	-	1.28	83108291/142830	✓	✓	✓	✓	✓	✓			**2KJ3433 - ■■■■■ - ■■ C1**
499	2.9	3 100	25 000	-	1.70	11872613/23805			✓	✓	✓	✓			**2KJ3433 - ■■■■■ - ■■ B1**
429	3.4	3 100	25 000	-	2.20	368051003/856980			✓	✓	✓	✓			**2KJ3433 - ■■■■■ - ■■ A1**

[1] Only in conjunction with reduced-backlash version

© Siemens AG 2017

4

Selection and ordering data (continued)

i	n_2	T_{2N}	F_{R2}	φ[1]	J_G	R_{ex}	Motor frame size								Article No.
-	rpm	Nm	N	'	10^{-4} kgm²	-	63	71	80	90	100	112	132	160	
FD.129-D49															
27 777	0.05	4 850	37 200	-	0.08	31110629/1120	✓	✓							2KJ3436 - ■■■■■ - ■■ N1
25 252	0.06	4 850	37 200	-	0.10	2828239/112	✓	✓	✓	✓					2KJ3436 - ■■■■■ - ■■ M1
21 605	0.07	4 850	37 200	-	0.12	31110629/1440	✓	✓	✓	✓					2KJ3436 - ■■■■■ - ■■ L1
19 641	0.07	4 850	37 200	-	0.14	2828239/144	✓	✓	✓	✓					2KJ3436 - ■■■■■ - ■■ K1
17 361	0.08	4 850	37 200	-	0.17	31110629/1792	✓	✓	✓	✓	✓	✓			2KJ3436 - ■■■■■ - ■■ J1
15 783	0.09	4 850	37 200	-	0.22	14141195/896	✓	✓	✓	✓	✓	✓			2KJ3436 - ■■■■■ - ■■ H1
13 824	0.10	4 850	37 200	-	0.26	1337757047/96768	✓	✓	✓	✓	✓	✓			2KJ3436 - ■■■■■ - ■■ G1
12 761	0.11	4 850	37 200	-	0.31	1337757047/104832	✓	✓	✓	✓	✓	✓			2KJ3436 - ■■■■■ - ■■ F1
11 298	0.13	4 850	37 200	-	0.37	1275535789/112896	✓	✓	✓	✓	✓	✓	✓		2KJ3436 - ■■■■■ - ■■ E1
9 404	0.15	4 850	37 200	-	0.50	404438177/43008	✓	✓	✓	✓	✓	✓	✓		2KJ3436 - ■■■■■ - ■■ D1
8 851	0.16	4 850	37 200	-	0.59	23790481/2688	✓	✓	✓	✓	✓	✓	✓		2KJ3436 - ■■■■■ - ■■ C1
7 930	0.18	4 850	37 200	-	0.65	1151093273/145152	✓	✓	✓	✓	✓	✓	✓		2KJ3436 - ■■■■■ - ■■ B1
6 751	0.21	4 850	37 200	-	0.85	31110629/4608	✓	✓	✓	✓	✓	✓	✓		2KJ3436 - ■■■■■ - ■■ A1
FZ.129-Z49															
6 604	0.22	4 850	37 200	-	0.18	177513589/26880	✓	✓	✓	✓					2KJ3435 - ■■■■■ - ■■ B2
6 004	0.24	4 850	37 200	-	0.21	16137599/2688	✓	✓	✓	✓					2KJ3435 - ■■■■■ - ■■ A2
5 106	0.28	4 850	37 200	-	0.27	9150185/1792	✓	✓	✓	✓					2KJ3435 - ■■■■■ - ■■ X1
4 642	0.31	4 850	37 200	-	0.32	4159175/896	✓	✓	✓	✓					2KJ3435 - ■■■■■ - ■■ W1
4 142	0.35	4 850	37 200	-	0.38	133592701/32256	✓	✓	✓	✓	✓	✓			2KJ3435 - ■■■■■ - ■■ V1
3 714	0.39	4 850	37 200	-	0.45	831835/224	✓	✓	✓	✓	✓	✓			2KJ3435 - ■■■■■ - ■■ U1
3 347	0.43	4 850	37 200	-	0.53	107972183/32256	✓	✓	✓	✓	✓	✓			2KJ3435 - ■■■■■ - ■■ T1
3 090	0.47	4 850	37 200	-	0.63	107972183/34944	✓	✓	✓	✓	✓	✓			2KJ3435 - ■■■■■ - ■■ S1
2 821	0.51	4 850	37 200	-	0.75	53071073/18816	✓	✓	✓	✓	✓	✓	✓		2KJ3435 - ■■■■■ - ■■ R1
2 340	0.62	4 850	37 200	-	0.95	100652035/43008	✓	✓	✓	✓	✓	✓	✓		2KJ3435 - ■■■■■ - ■■ Q1
2 203	0.66	4 850	37 200	-	1.10	100652035/45696	✓	✓	✓	✓	✓	✓	✓		2KJ3435 - ■■■■■ - ■■ P1
2 080	0.70	4 850	37 200	-	1.25	100652035/48384	✓	✓	✓	✓	✓	✓	✓		2KJ3435 - ■■■■■ - ■■ N1
1 770	0.82	4 850	37 200	-	1.53	23790481/13440	✓	✓	✓	✓	✓	✓	✓		2KJ3435 - ■■■■■ - ■■ M1
1 516	0.96	4 850	37 200	-	1.89	1164569/768			✓	✓	✓	✓	✓		2KJ3435 - ■■■■■ - ■■ L1
1 333	1.1	4 850	37 200	-	2.3	86011739/64512			✓	✓	✓	✓	✓		2KJ3435 - ■■■■■ - ■■ K1
1 125	1.3	4 850	37 200	-	2.9	34770703/30912			✓	✓	✓	✓	✓		2KJ3435 - ■■■■■ - ■■ J1
980	1.5	4 850	37 200	-	3.9	5490111/5600			✓	✓	✓	✓	✓		2KJ3435 - ■■■■■ - ■■ H1
967	1.5	4 850	37 200	-	1.51	27620791/28560	✓	✓	✓	✓	✓	✓	✓		2KJ3435 - ■■■■■ - ■■ G1
913	1.6	4 850	37 200	-	1.71	27620791/30240	✓	✓	✓	✓	✓	✓	✓		2KJ3435 - ■■■■■ - ■■ F1
777	1.9	4 850	37 200	-	2.2	32642753/42000	✓	✓	✓	✓	✓	✓	✓		2KJ3435 - ■■■■■ - ■■ E1
666	2.2	4 850	37 200	-	2.8	1597897/2400			✓	✓	✓	✓	✓		2KJ3435 - ■■■■■ - ■■ D1
585	2.5	4 850	37 200	-	3.5	118016107/201600			✓	✓	✓	✓	✓		2KJ3435 - ■■■■■ - ■■ C1
494	2.9	4 850	37 200	-	4.5	47708639/96600			✓	✓	✓	✓	✓		2KJ3435 - ■■■■■ - ■■ B1
430	3.4	4 850	37 200	-	6.0	7532943/17500			✓	✓	✓	✓	✓		2KJ3435 - ■■■■■ - ■■ A1

[1] Only in conjunction with reduced-backlash version

© Siemens AG 2017

Selection and ordering data (continued)

i	n_2	T_{2N}	F_{R2}	φ[1]	J_G	R_{ex}	Motor frame size								Article No.
-	rpm	Nm	N	‘	10^{-4} kgm²	-	63	71	80	90	100	112	132	160	
FD.149-D49															
27 793	0.05	8 000	65 000	-	0.08	1361853/49	✓	✓							**2KJ3438 - ■■■■■ - ■■ N1**
25 266	0.06	8 000	65 000	-	0.10	13618530/539	✓	✓	✓	✓					**2KJ3438 - ■■■■■ - ■■ M1**
21 617	0.07	8 000	65 000	-	0.12	151317/7	✓	✓	✓	✓					**2KJ3438 - ■■■■■ - ■■ L1**
19 652	0.07	8 000	65 000	-	0.14	1513170/77	✓	✓	✓	✓					**2KJ3438 - ■■■■■ - ■■ K1**
17 371	0.08	8 000	65 000	-	0.17	6809265/392	✓	✓	✓	✓	✓	✓			**2KJ3438 - ■■■■■ - ■■ J1**
15 791	0.09	8 000	65 000	-	0.22	34046325/2156	✓	✓	✓	✓	✓	✓			**2KJ3438 - ■■■■■ - ■■ H1**
13 832	0.10	8 000	65 000	-	0.26	10844385/784	✓	✓	✓	✓	✓	✓			**2KJ3438 - ■■■■■ - ■■ G1**
12 768	0.11	8 000	65 000	-	0.31	32533155/2548	✓	✓	✓	✓	✓	✓			**2KJ3438 - ■■■■■ - ■■ F1**
11 305	0.13	8 000	65 000	-	0.37	31019985/2744	✓	✓	✓	✓	✓	✓	✓		**2KJ3438 - ■■■■■ - ■■ E1**
9 409	0.15	8 000	65 000	-	0.50	29506815/3136	✓	✓	✓	✓	✓	✓	✓		**2KJ3438 - ■■■■■ - ■■ D1**
8 856	0.16	8 000	65 000	-	0.59	1735695/196	✓	✓	✓	✓	✓	✓	✓		**2KJ3438 - ■■■■■ - ■■ C1**
7 935	0.18	8 000	65 000	-	0.66	3110405/392	✓	✓	✓	✓	✓	✓	✓		**2KJ3438 - ■■■■■ - ■■ B1**
6 755	0.21	8 000	65 000	-	0.86	756585/112	✓	✓	✓	✓	✓	✓	✓		**2KJ3438 - ■■■■■ - ■■ A1**
FD.149-Z49															
6 608	0.22	8 000	65 000	-	0.18	2590191/392	✓	✓	✓	✓					**2KJ3437 - ■■■■■ - ■■ B2**
6 007	0.24	8 000	65 000	-	0.22	12950955/2156	✓	✓	✓	✓					**2KJ3437 - ■■■■■ - ■■ A2**
5 109	0.28	8 000	65 000	-	0.28	2002725/392	✓	✓	✓	✓					**2KJ3437 - ■■■■■ - ■■ X1**
4 545	0.32	8 000	65 000	-	0.34	10013625/2156	✓	✓	✓	✓					**2KJ3437 - ■■■■■ - ■■ W1**
4 144	0.35	8 000	65 000	-	0.39	3248865/784	✓	✓	✓	✓	✓	✓			**2KJ3437 - ■■■■■ - ■■ V1**
3 716	0.39	8 000	65 000	-	0.47	2002725/539	✓	✓	✓	✓	✓	✓			**2KJ3437 - ■■■■■ - ■■ U1**
3 349	0.43	8 000	65 000	-	0.55	2625795/784	✓	✓	✓	✓	✓	✓			**2KJ3437 - ■■■■■ - ■■ T1**
3 092	0.47	8 000	65 000	-	0.66	7877385/2548	✓	✓	✓	✓	✓	✓			**2KJ3437 - ■■■■■ - ■■ S1**
2 822	0.51	8 000	65 000	-	0.78	3871935/1372	✓	✓	✓	✓	✓	✓	✓		**2KJ3437 - ■■■■■ - ■■ R1**
2 342	0.62	8 000	65 000	-	1.0	7343325/3136	✓	✓	✓	✓	✓	✓	✓		**2KJ3437 - ■■■■■ - ■■ Q1**
2 204	0.66	8 000	65 000	-	1.16	7343325/3332	✓	✓	✓	✓	✓	✓	✓		**2KJ3437 - ■■■■■ - ■■ P1**
2 081	0.70	8 000	65 000	-	1.31	815925/392	✓	✓	✓	✓	✓	✓	✓		**2KJ3437 - ■■■■■ - ■■ N1**
1 771	0.82	8 000	65 000	-	1.62	347139/196	✓	✓	✓	✓	✓	✓	✓		**2KJ3437 - ■■■■■ - ■■ M1**
1 517	0.96	8 000	65 000	-	2.0	133515/88			✓	✓	✓	✓	✓		**2KJ3437 - ■■■■■ - ■■ L1**
1 334	1.1	8 000	65 000	-	2.5	2091735/1568			✓	✓	✓	✓	✓		**2KJ3437 - ■■■■■ - ■■ K1**
1 125	1.3	8 000	65 000	-	3.2	110295/98			✓	✓	✓	✓	✓		**2KJ3437 - ■■■■■ - ■■ J1**
981	1.5	8 000	65 000	-	4.2	240327/245			✓	✓	✓	✓	✓		**2KJ3437 - ■■■■■ - ■■ H1**
968	1.5	8 000	65 000	-	1.81	806058/833	✓	✓	✓	✓	✓	✓	✓		**2KJ3437 - ■■■■■ - ■■ G1**
914	1.6	8 000	65 000	-	2.0	44781/49	✓	✓	✓	✓	✓	✓	✓		**2KJ3437 - ■■■■■ - ■■ F1**
778	1.9	8 000	65 000	-	2.6	952614/1225	✓	✓	✓	✓	✓	✓	✓		**2KJ3437 - ■■■■■ - ■■ E1**
666	2.2	8 000	65 000	-	3.4	36639/55			✓	✓	✓	✓	✓		**2KJ3437 - ■■■■■ - ■■ D1**
586	2.5	8 000	65 000	-	4.3	574011/980			✓	✓	✓	✓	✓		**2KJ3437 - ■■■■■ - ■■ C1**
494	2.9	8 000	65 000	-	5.7	121068/245			✓	✓	✓	✓	✓		**2KJ3437 - ■■■■■ - ■■ B1**
431	3.4	8 000	65 000	-	7.5	2638008/6125			✓	✓	✓	✓	✓		**2KJ3437 - ■■■■■ - ■■ A1**

[1] Only in conjunction with reduced-backlash version

© Siemens AG 2017

4

Selection and ordering data (continued)

i	n_2	T_{2N}	F_{R2}	φ[1]	J_G	R_{ex}	Motor frame size								Article No.
-	rpm	Nm	N	'	10^{-4} kgm²	-	63	71	80	90	100	112	132	160	
FD.169-D69															
29 846	0.05	13 600	73 500	-	0.07	4387328/147	✓	✓	✓	✓					2KJ3441 - ■■■■■ - ■■ P1
26 206	0.06	13 600	73 500	-	0.08	1284096/49	✓	✓	✓	✓					2KJ3441 - ■■■■■ - ■■ N1
23 824	0.06	13 600	73 500	-	0.10	1167360/49	✓	✓	✓	✓					2KJ3441 - ■■■■■ - ■■ M1
20 382	0.07	13 600	73 500	-	0.12	428032/21	✓	✓	✓	✓					2KJ3441 - ■■■■■ - ■■ L1
18 530	0.08	13 600	73 500	-	0.15	389120/21	✓	✓	✓	✓					2KJ3441 - ■■■■■ - ■■ K1
16 379	0.09	13 600	73 500	-	0.17	802560/49	✓	✓	✓	✓	✓	✓			2KJ3441 - ■■■■■ - ■■ J1
14 890	0.10	13 600	73 500	-	0.23	729600/49	✓	✓	✓	✓	✓	✓			2KJ3441 - ■■■■■ - ■■ H1
13 042	0.11	13 600	73 500	-	0.26	5751680/441	✓	✓	✓	✓	✓	✓			2KJ3441 - ■■■■■ - ■■ G1
12 039	0.12	13 600	73 500	-	0.32	23006720/1911	✓	✓	✓	✓	✓	✓			2KJ3441 - ■■■■■ - ■■ F1
10 659	0.14	13 600	73 500	-	0.39	10968320/1029	✓	✓	✓	✓	✓	✓	✓		2KJ3441 - ■■■■■ - ■■ E1
8 872	0.16	13 600	73 500	-	0.52	434720/49	✓	✓	✓	✓	✓	✓	✓		2KJ3441 - ■■■■■ - ■■ D1
8 350	0.17	13 600	73 500	-	0.61	6955520/833	✓	✓	✓	✓	✓	✓	✓		2KJ3441 - ■■■■■ - ■■ C1
7 482	0.19	13 600	73 500	-	0.68	9898240/1323	✓	✓	✓	✓	✓	✓	✓		2KJ3441 - ■■■■■ - ■■ B1
6 370	0.23	13 600	73 500	-	0.89	133760/21	✓	✓	✓	✓	✓	✓	✓		2KJ3441 - ■■■■■ - ■■ A1
FD.169-Z69															
6 230	0.23	13 600	73 500	-	0.21	5189888/833	✓	✓	✓	✓					2KJ3440 - ■■■■■ - ■■ A2
5 664	0.26	13 600	73 500	-	0.26	4718080/833	✓	✓	✓	✓					2KJ3440 - ■■■■■ - ■■ X1
4 817	0.30	13 600	73 500	-	0.33	4012800/833	✓	✓	✓	✓					2KJ3440 - ■■■■■ - ■■ W1
4 379	0.33	13 600	73 500	-	0.40	3648000/833	✓	✓	✓	✓					2KJ3440 - ■■■■■ - ■■ V1
3 907	0.37	13 600	73 500	-	0.47	9764480/2499	✓	✓	✓	✓	✓	✓			2KJ3440 - ■■■■■ - ■■ U1
3 503	0.41	13 600	73 500	-	0.57	2918400/833	✓	✓	✓	✓	✓	✓			2KJ3440 - ■■■■■ - ■■ T1
3 158	0.46	13 600	73 500	-	0.67	7891840/2499	✓	✓	✓	✓	✓	✓			2KJ3440 - ■■■■■ - ■■ S1
2 915	0.50	13 600	73 500	-	0.80	31567360/10829	✓	✓	✓	✓	✓	✓			2KJ3440 - ■■■■■ - ■■ R1
2 661	0.54	13 600	73 500	-	0.95	15516160/5831	✓	✓	✓	✓	✓	✓	✓		2KJ3440 - ■■■■■ - ■■ Q1
2 208	0.66	13 600	73 500	-	1.25	1839200/833	✓	✓	✓	✓	✓	✓	✓		2KJ3440 - ■■■■■ - ■■ P1
2 078	0.70	13 600	73 500	-	1.44	29427200/14161	✓	✓	✓	✓	✓	✓	✓		2KJ3440 - ■■■■■ - ■■ N1
1 963	0.74	13 600	73 500	-	1.63	14713600/7497	✓	✓	✓	✓	✓	✓	✓		2KJ3440 - ■■■■■ - ■■ M1
1 670	0.87	13 600	73 500	-	2.1	1391104/833	✓	✓	✓	✓	✓	✓	✓		2KJ3440 - ■■■■■ - ■■ L1
1 431	1.0	13 600	73 500	-	2.6	24320/17			✓	✓	✓	✓	✓		2KJ3440 - ■■■■■ - ■■ K1
1 258	1.2	13 600	73 500	-	3.2	3143360/2499			✓	✓	✓	✓	✓		2KJ3440 - ■■■■■ - ■■ J1
1 061	1.4	13 600	73 500	-	4.2	20331520/19159			✓	✓	✓	✓	✓		2KJ3440 - ■■■■■ - ■■ H1
925	1.6	13 600	73 500	-	5.7	3852288/4165			✓	✓	✓	✓	✓		2KJ3440 - ■■■■■ - ■■ G1
869	1.7	13 600	73 500	-	3.2	21401600/24633			✓	✓	✓	✓	✓		2KJ3440 - ■■■■■ - ■■ F1
739	2.0	13 600	73 500	-	4.3	2023424/2737	✓	✓	✓	✓	✓	✓	✓		2KJ3440 - ■■■■■ - ■■ E1
633	2.3	13 600	73 500	-	5.6	2723840/4301			✓	✓	✓	✓	✓		2KJ3440 - ■■■■■ - ■■ D1
557	2.6	13 600	73 500	-	7.1	4572160/8211			✓	✓	✓	✓	✓		2KJ3440 - ■■■■■ - ■■ C1
470	3.1	13 600	73 500	-	9.7	29573120/62951			✓	✓	✓	✓	✓		2KJ3440 - ■■■■■ - ■■ B1
409	3.5	13 600	73 500	-	13	5603328/13685			✓	✓	✓	✓	✓		2KJ3440 - ■■■■■ - ■■ A1

[1] Only in conjunction with reduced-backlash version

© Siemens AG 2017

Selection and ordering data (continued)

i	n_2	T_{2N}	F_{R2}	φ [1]	J_G	R_{ex}	Motor frame size								Article No.
-	rpm	Nm	N	‘	10^{-4} kgm²	-	63	71	80	90	100	112	132	160	
FD.189-D69															
27 341	0.05	19 000	110 900	-	0.10	2870816/105	✓	✓	✓	✓					**2KJ3443 - ■■■■■ - ■■ M1**
23 392	0.06	19 000	110 900	-	0.12	15789488/675	✓	✓	✓	✓					**2KJ3443 - ■■■■■ - ■■ L1**
21 265	0.07	19 000	110 900	-	0.15	2870816/135	✓	✓	✓	✓					**2KJ3443 - ■■■■■ - ■■ K1**
18 797	0.08	19 000	110 900	-	0.17	1973686/105	✓	✓	✓	✓	✓	✓			**2KJ3443 - ■■■■■ - ■■ J1**
17 088	0.08	19 000	110 900	-	0.23	358852/21	✓	✓	✓	✓	✓	✓			**2KJ3443 - ■■■■■ - ■■ H1**
14 968	0.10	19 000	110 900	-	0.27	42434249/2835	✓	✓	✓	✓	✓	✓			**2KJ3443 - ■■■■■ - ■■ G1**
13 817	0.10	19 000	110 900	-	0.32	13056692/945	✓	✓	✓	✓	✓	✓			**2KJ3443 - ■■■■■ - ■■ F1**
12 233	0.12	19 000	110 900	-	0.39	80921126/6615	✓	✓	✓	✓	✓	✓	✓		**2KJ3443 - ■■■■■ - ■■ E1**
10 182	0.14	19 000	110 900	-	0.53	12828959/1260	✓	✓	✓	✓	✓	✓	✓		**2KJ3443 - ■■■■■ - ■■ D1**
9 583	0.15	19 000	110 900	-	0.62	51315836/5355	✓	✓	✓	✓	✓	✓	✓		**2KJ3443 - ■■■■■ - ■■ C1**
8 586	0.17	19 000	110 900	-	0.69	73026382/8505	✓	✓	✓	✓	✓	✓	✓		**2KJ3443 - ■■■■■ - ■■ B1**
7 310	0.20	19 000	110 900	-	0.90	986843/135	✓	✓	✓	✓	✓	✓	✓		**2KJ3443 - ■■■■■ - ■■ A1**
FD.189-Z69															
7 150	0.20	19 000	110 900	-	0.23	191447542/26775	✓	✓	✓	✓					**2KJ3442 - ■■■■■ - ■■ C2**
6 500	0.22	19 000	110 900	-	0.28	34808644/5355	✓	✓	✓	✓					**2KJ3442 - ■■■■■ - ■■ B2**
5 529	0.26	19 000	110 900	-	0.35	1973686/357	✓	✓	✓	✓					**2KJ3442 - ■■■■■ - ■■ A2**
5 026	0.29	19 000	110 900	-	0.43	1794260/357	✓	✓	✓	✓					**2KJ3442 - ■■■■■ - ■■ X1**
4 484	0.32	19 000	110 900	-	0.51	72039539/16065	✓	✓	✓	✓	✓	✓			**2KJ3442 - ■■■■■ - ■■ W1**
4 021	0.36	19 000	110 900	-	0.62	1435408/357	✓	✓	✓	✓	✓	✓			**2KJ3442 - ■■■■■ - ■■ V1**
3 624	0.40	19 000	110 900	-	0.73	58223737/16065	✓	✓	✓	✓	✓	✓			**2KJ3442 - ■■■■■ - ■■ U1**
3 345	0.43	19 000	110 900	-	0.87	17914996/5355	✓	✓	✓	✓	✓	✓			**2KJ3442 - ■■■■■ - ■■ T1**
3 054	0.47	19 000	110 900	-	1.04	114473788/37485	✓	✓	✓	✓	✓	✓	✓		**2KJ3442 - ■■■■■ - ■■ S1**
2 534	0.57	19 000	110 900	-	1.38	10855273/4284	✓	✓	✓	✓	✓	✓	✓		**2KJ3442 - ■■■■■ - ■■ R1**
2 385	0.61	19 000	110 900	-	1.57	43421092/18207	✓	✓	✓	✓	✓	✓	✓		**2KJ3442 - ■■■■■ - ■■ Q1**
2 252	0.64	19 000	110 900	-	1.78	21710546/9639	✓	✓	✓	✓	✓	✓	✓		**2KJ3442 - ■■■■■ - ■■ P1**
1 917	0.76	19 000	110 900	-	2.3	51315836/26775	✓	✓	✓	✓	✓	✓	✓		**2KJ3442 - ■■■■■ - ■■ N1**
1 642	0.88	19 000	110 900	-	2.9	1255982/765	✓	✓	✓	✓	✓	✓	✓		**2KJ3442 - ■■■■■ - ■■ M1**
1 444	1.0	19 000	110 900	-	3.6	46381621/32130			✓	✓	✓	✓	✓		**2KJ3442 - ■■■■■ - ■■ L1**
1 218	1.2	19 000	110 900	-	4.8	150000136/123165			✓	✓	✓	✓	✓		**2KJ3442 - ■■■■■ - ■■ K1**
1 061	1.4	19 000	110 900	-	6.4	15789488/14875			✓	✓	✓	✓	✓		**2KJ3442 - ■■■■■ - ■■ J1**
997	1.5	19 000	110 900	-	4.0	31578976/31671			✓	✓	✓	✓	✓		**2KJ3442 - ■■■■■ - ■■ H1**
848	1.7	19 000	110 900	-	5.4	74641216/87975	✓	✓	✓	✓	✓	✓	✓		**2KJ3442 - ■■■■■ - ■■ G1**
727	2.0	19 000	110 900	-	7.1	140669984/193545	✓	✓	✓	✓	✓	✓	✓		**2KJ3442 - ■■■■■ - ■■ F1**
639	2.3	19 000	110 900	-	9.1	33732088/52785			✓	✓	✓	✓	✓		**2KJ3442 - ■■■■■ - ■■ E1**
539	2.7	19 000	110 900	-	12	218182016/404685			✓	✓	✓	✓	✓		**2KJ3442 - ■■■■■ - ■■ D1**
478	3.0	19 000	110 900	-	12	8403976/17595			✓	✓	✓	✓	✓		**2KJ3442 - ■■■■■ - ■■ C1**
403	3.6	19 000	110 900	-	16	54357632/134895			✓	✓	✓	✓	✓		**2KJ3442 - ■■■■■ - ■■ B1**
351	4.1	19 000	110 900	-	21	17165568/48875			✓	✓	✓	✓	✓		**2KJ3442 - ■■■■■ - ■■ A1**

[1] Only in conjunction with reduced-backlash version

© Siemens AG 2017

4

Dimensional drawing overview

Information about dimensional drawings can be found in chapter Introduction on page 1/21.

Design	Size	Dimensional drawing on page
Shaft-mounted design		
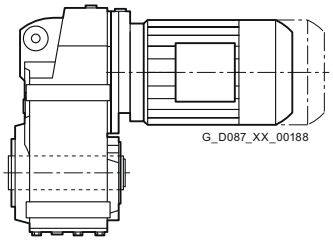 G_D087_XX_00188	FDAD./FZAD.29	4/74
	FDAD./FZAD.39	4/78
	FDAD./FZAD.49	4/82
	FDAD./FZAD.69	4/86
	FDAD./FZAD.79	4/90
	FDAD./FZAD.89	4/94
	FDAD./FZAD.109	4/98
	FDAD./FZAD.129	4/102
	FDAD./FZAD.149	4/106
	FDAD./FZAD.169	4/110
	FDAD./FZAD.189	4/114
Housing flange design		
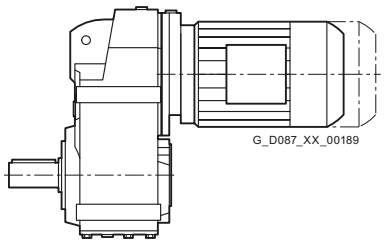 G_D087_XX_00189	FD.Z./FZ.Z.29	4/75
	FD.Z./FZ.Z.39	4/79
	FD.Z./FZ.Z.49	4/83
	FD.Z./FZ.Z.69	4/87
	FD.Z./FZ.Z.79	4/91
	FD.Z./FZ.Z.89	4/95
	FD.Z./FZ.Z.109	4/99
	FD.Z./FZ.Z.129	4/103
	FD.Z./FZ.Z.149	4/107
	FD.Z./FZ.Z.169	4/111
	FD.Z./FZ.Z.189	4/115
Flange-mounted design		
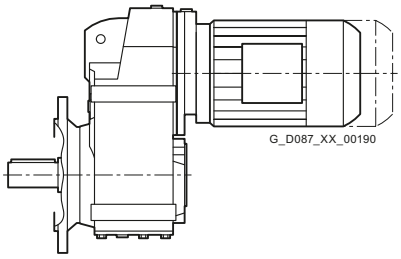 G_D087_XX_00190	FD.F./FZ.F.29	4/76
	FD.F./FZ.F.39	4/80
	FD.F./FZ.F.49	4/84
	FD.F./FZ.F.69	4/88
	FD.F./FZ.F.79	4/92
	FD.F./FZ.F.89	4/96
	FD.F./FZ.F.109	4/100
	FD.F./FZ.F.129	4/104
	FD.F./FZ.F.149	4/108
	FD.F./FZ.F.169	4/112
	FD.F./FZ.F.189	4/116
Foot-mounted design		
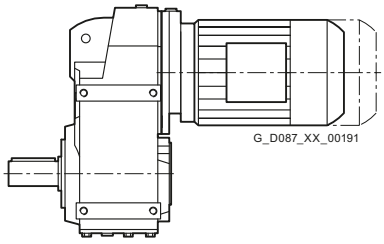 G_D087_XX_00191	FD../FZ..29	4/77
	FD../FZ..39	4/81
	FD../FZ..49	4/85
	FD../FZ..69	4/89
	FD../FZ..79	4/93
	FD../FZ..89	4/97
	FD../FZ..109	4/101
	FD../FZ..129	4/105
	FD../FZ..149	4/109
	FD../FZ..169	4/113
	FD../FZ..189	4/117

© Siemens AG 2017

Dimensional drawing overview (continued)

Design	Size	Dimensional drawing on page
Parallel shaft tandem geared motor		
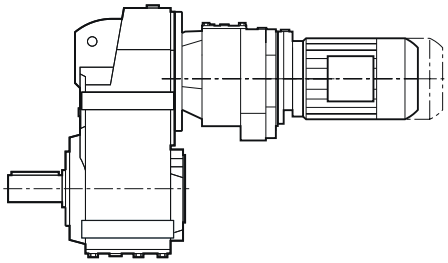	FD../FZ..29-D/Z19 ... FD..189-D/Z69	4/118 ... 4/119
Additional versions and options		
SIMOLOC assembly system		
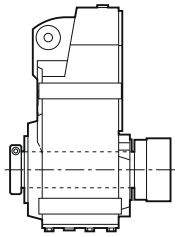	FDADR/FZADR29 ... FDADR/FZADR89	4/120
Protection covers		
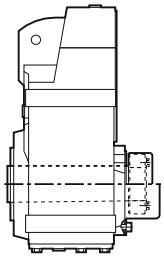	FD../FZ..29 ... FD../FZ..189	4/121 ... 4/122
Inner contour of the flange design		
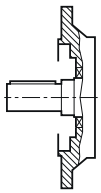	FDF/FZF.29 ... FDF/FZF.189 FDAF/FZAF.29 ... FDAF/FZAF.189	4/123
Pin holes		
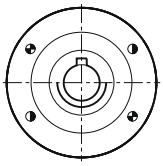	F.Z.109 and F.Z.129	4/124

© Siemens AG 2017

4

FDAD./FZAD.29 gearbox in a shaft-mounted design

FAD030, FADS030

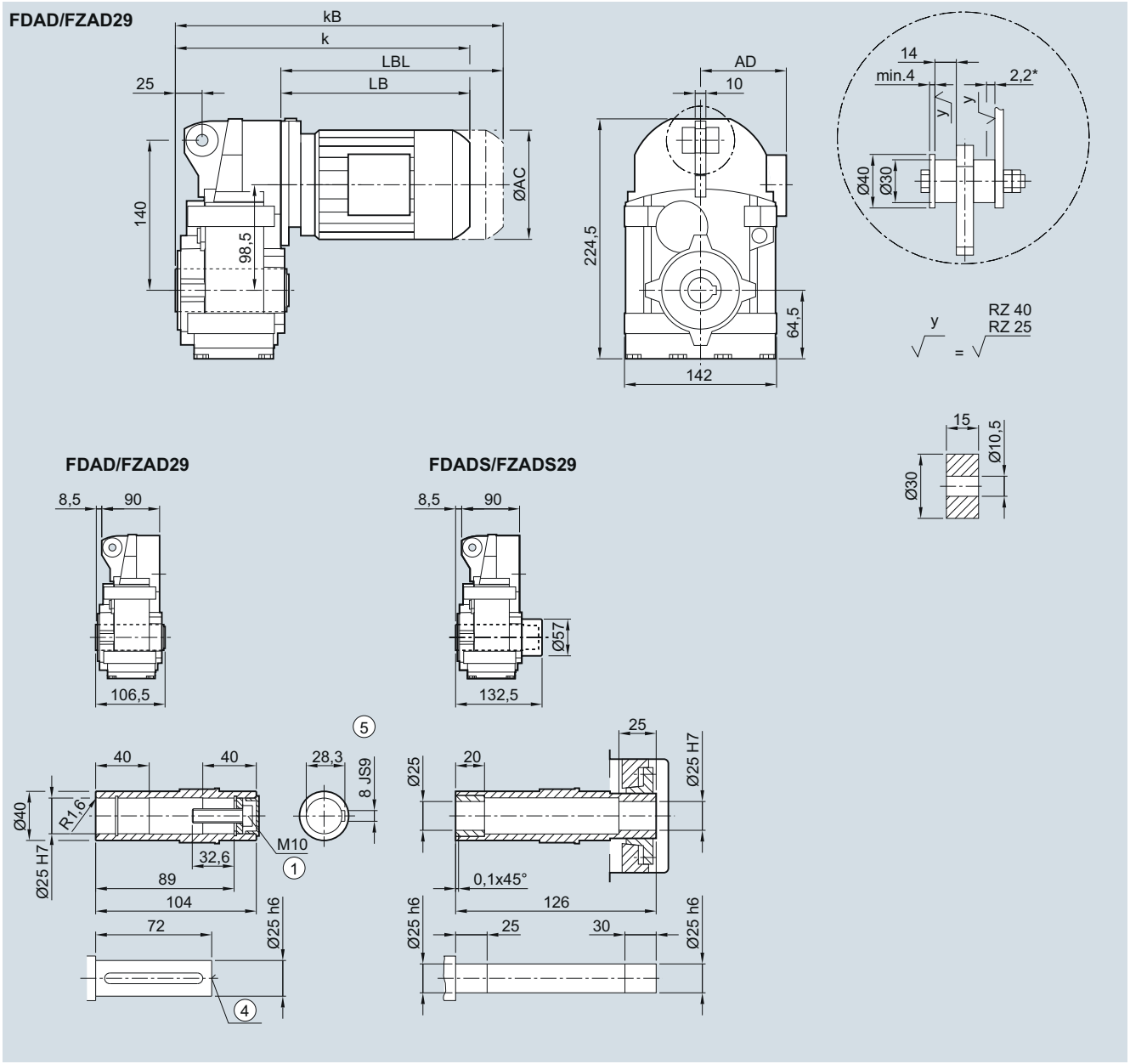

Motor	LA			LE					
	63	71	71Z	80	80Z	90[2]	90Z[2]	100[2]	100Z[2]
AC	117.8	138.8	138.8	156.3	156.3	173.8	173.8	198.0	198.0
AD[1]	124.0	134.0	134.0	149.2	149.2	154.2	154.2	170.5	170.5
k	292.5	324.5	343.5	388.5	423.5	450.0	490.0	506.5	541.5
kB	337.0	379.5	398.5	448.5	483.5	520.0	560.0	585.0	620.0
LB	194.0	226.0	245.0	290.0	325.0	351.5	391.5	408.0	443.0
LBL	238.5	281.0	300.0	350.0	385.0	421.5	461.5	486.5	521.5

① ISO 4017 ④ DIN 332 ⑤ Feather key/keyway DIN 6885-1 * Spring compression at max. torque

1) AD depends on the motor options, for other dimensions see page 8/36.

2) FDADS/FZADS not possible

© Siemens AG 2017

FD.Z./FZ.Z.29 gearbox in a housing flange design

FZ030, FAZ030, FAZS030

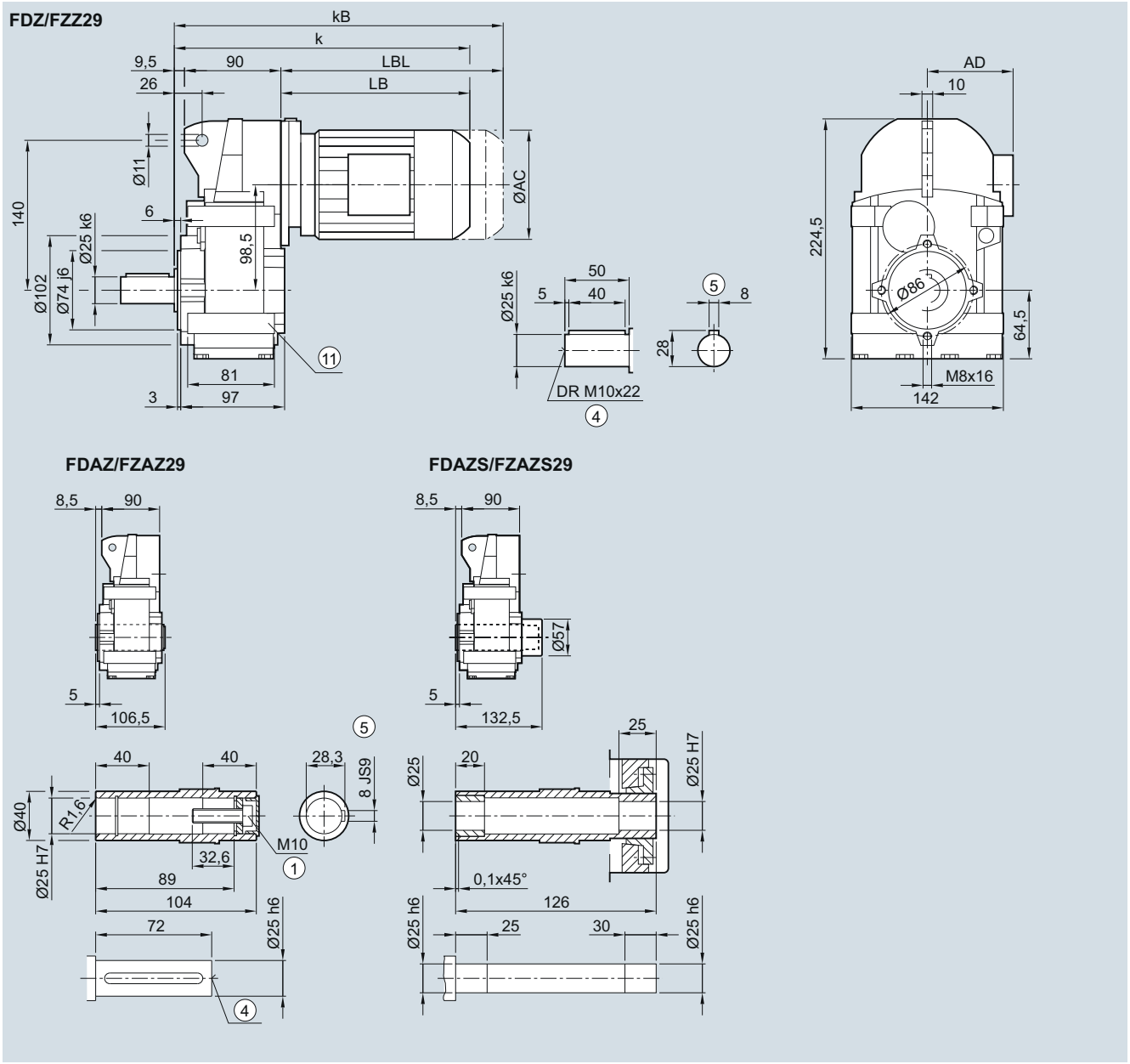

Motor	LA			LE					
	63	71	71Z	80	80Z	90[2]	90Z[2]	100[2]	100Z[2]
AC	117.8	138.8	138.8	156.3	156.3	173.8	173.8	198.0	198.0
AD[1]	124.0	134.0	134.0	149.2	149.2	154.2	154.2	170.5	170.5
k	293.5	325.5	344.5	389.5	424.5	451.0	491.0	507.5	542.5
kB	338.0	380.5	399.5	449.5	484.5	521.0	561.0	586.0	621.0
LB	194.0	226.0	245.0	290.0	325.0	351.5	391.5	408.0	443.0
LBL	238.5	281.0	300.0	350.0	385.0	421.5	461.5	486.5	521.5

① ISO 4017 ④ DIN 332 ⑤ Feather key/keyway DIN 6885-1 ⑪ Use bores only for foot-mounted design

1) AD depends on the motor options, for other dimensions see page 8/36.

2) FDADS/FZADS not possible

© Siemens AG 2017

FD.F./FZ.F.29 gearbox in a flange-mounted design

FF030, FAF030, FAFS030

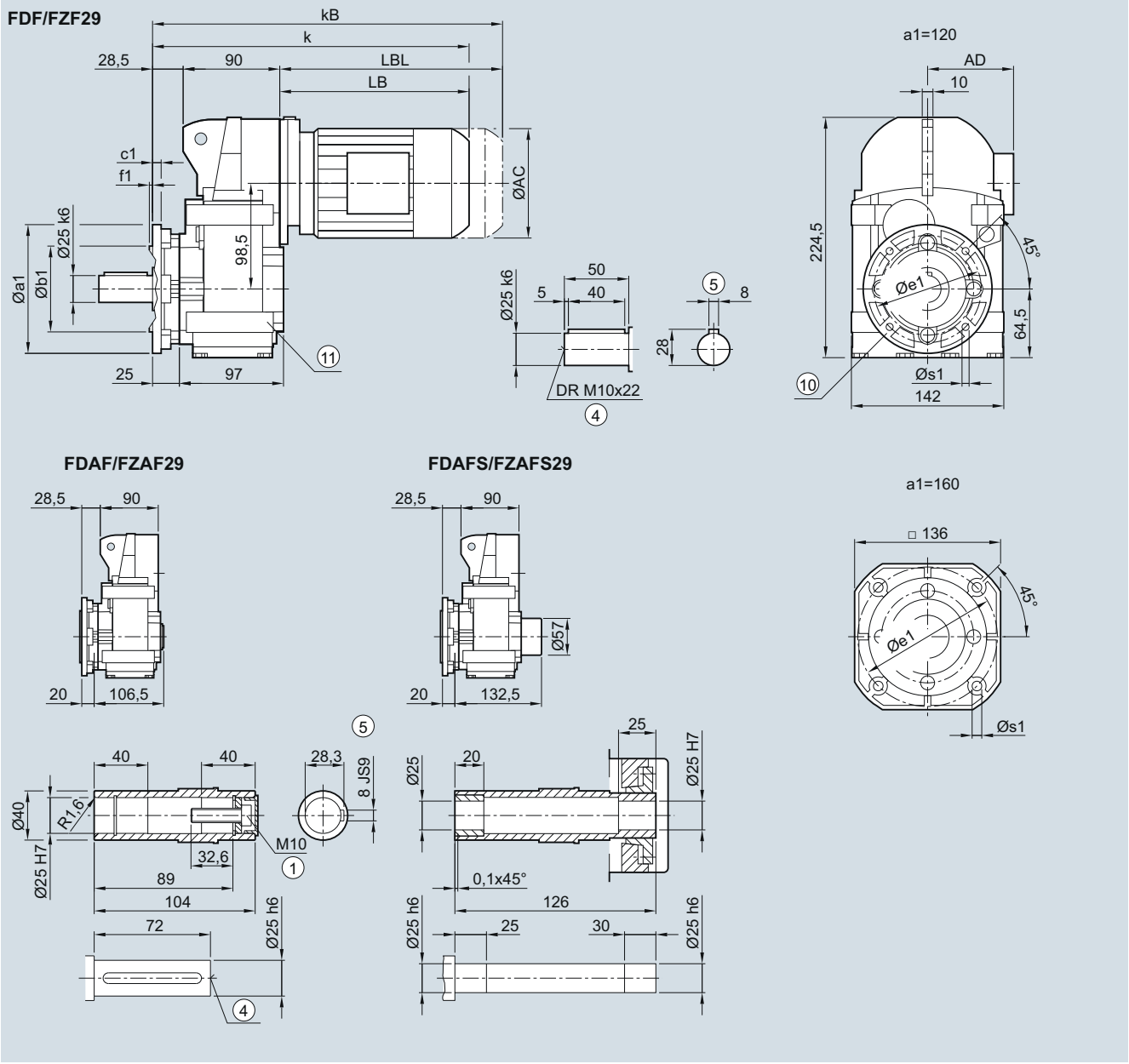

Flange	a1	b1	c1	f1	e1	s1
	120	80	8	3.0	100	6.6
	160	110	9	3.5	130	9.0

Motor	LA			LE					
	63	71	71Z	80	80Z	90[2)]	90Z[2)]	100[2)]	100Z[2)]
AC	117.8	138.8	138.8	156.3	156.3	173.8	173.8	198.0	198.0
AD[1)]	124.0	134.0	134.0	149.2	149.2	154.2	154.2	170.5	170.5
k	312.5	344.5	363.5	408.5	443.5	470.0	510.0	526.5	561.5
kB	357.0	399.5	418.5	468.5	503.5	540.0	580.0	605.0	640.0
LB	194.0	226.0	245.0	290.0	325.0	351.5	391.5	408.0	443.0
LBL	238.5	281.0	300.0	350.0	385.0	421.5	461.5	486.5	521.5

① ISO 4017 ④ DIN 332 ⑤ Feather key/keyway DIN 6885-1 ⑩ For inner contour see page 4/123
[1)] AD depends on the motor options, for other dimensions see page 8/36. [2)] FDADS/FZADS not possible ⑪ Use bores only for foot-mounted design

© Siemens AG 2017

FD../FZ..29 gearbox in a foot-mounted design

F030, FA030, FAS030

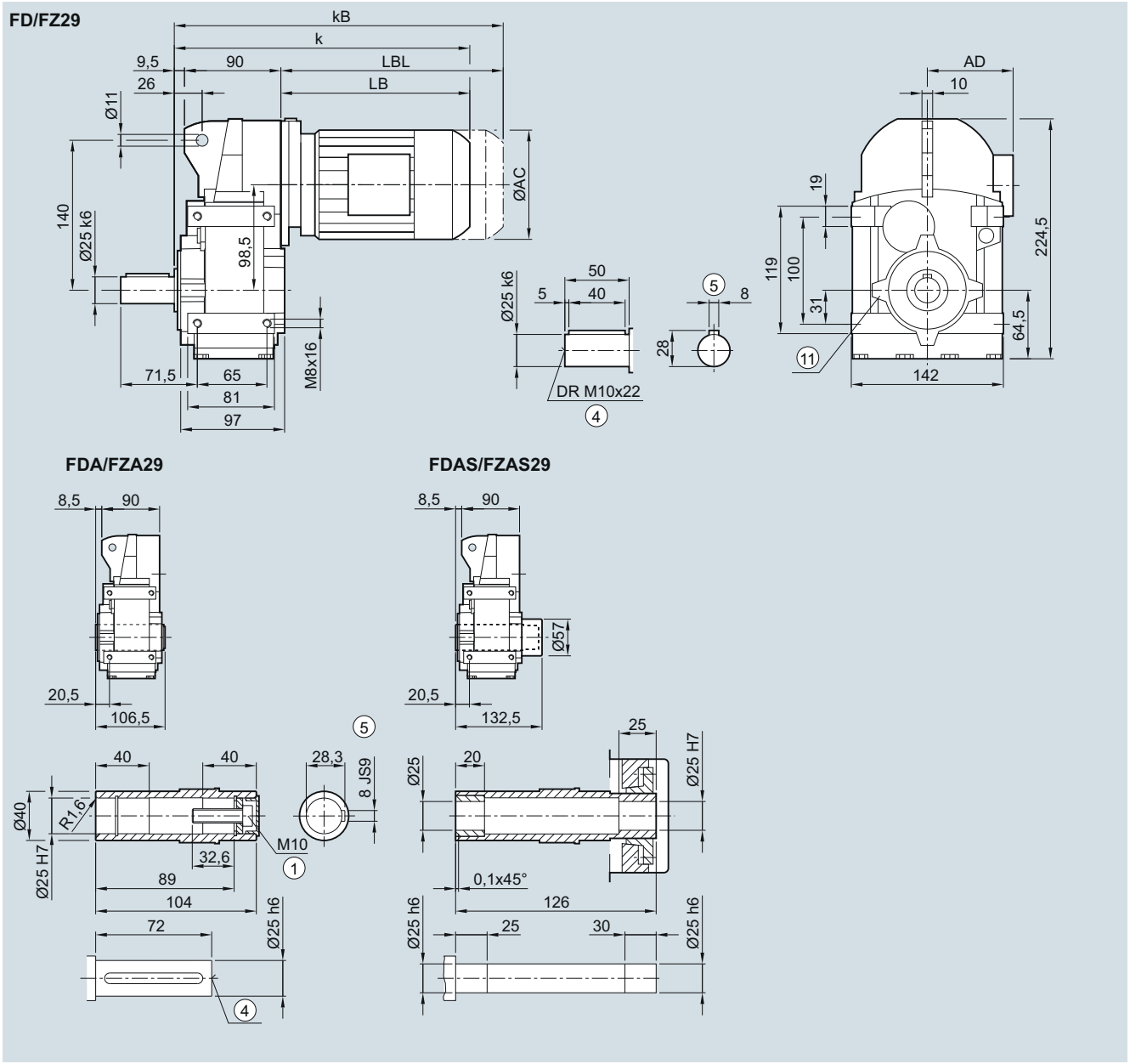

Motor	LA			LE					
	63	71	71Z	80	80Z	90[2]	90Z[2]	100[2]	100Z[2]
AC	117.8	138.8	138.8	156.3	156.3	173.8	173.8	198.0	198.0
AD[1]	124.0	134.0	134.0	149.2	149.2	154.2	154.2	170.5	170.5
k	293.5	325.5	344.5	389.5	424.5	451.0	491.0	507.5	542.5
kB	338.0	380.5	399.5	449.5	484.5	521.0	561.0	586.0	621.0
LB	194.0	226.0	245.0	290.0	325.0	351.5	391.5	408.0	443.0
LBL	238.5	281.0	300.0	350.0	385.0	421.5	461.5	486.5	521.5

① ISO 4017 ④ DIN 332 ⑤ Feather key/keyway DIN 6885-1 ⑪ Use bores only for housing flange design

1) AD depends on the motor options, for other dimensions see page 8/36.

2) FDADS/FZADS not possible

© Siemens AG 2017

FDAD./FZAD.39 gearbox in a shaft-mounted design

FAD030, FADS030, FADT030

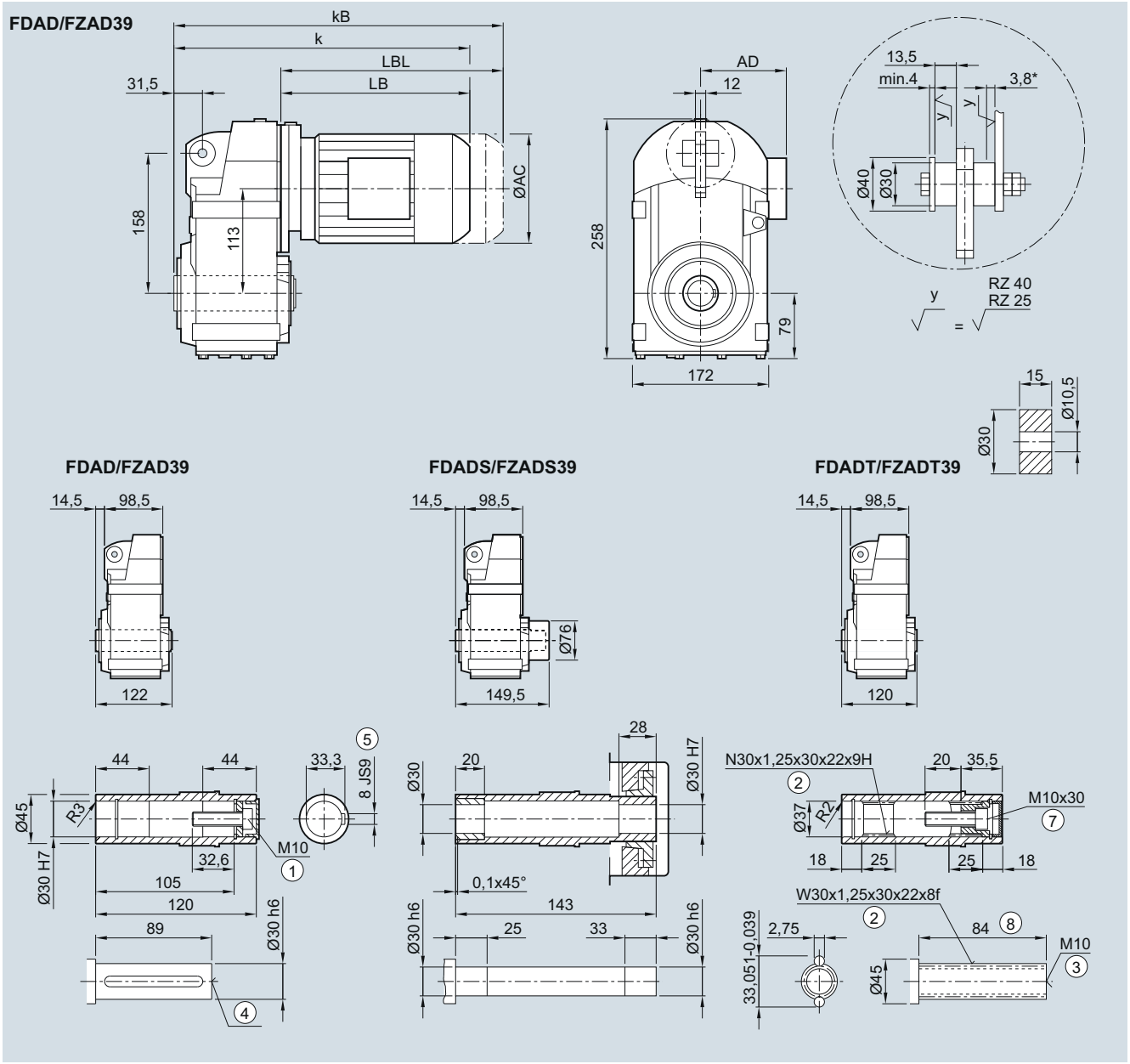

Motor	LA			LE							
	63	71	71Z	80	80Z	90S	90Z	100[2]	100Z[2]	112[2]	112Z[2]
AC	117.8	138.8	138.8	156.3	156.3	173.8	173.8	198.0	198.0	222.0	222.0
AD[1]	124.0	134.0	134.0	149.2	149.2	154.2	154.2	170.5	170.5	181.5	181.5
k	307.0	339.0	358.0	403.0	438.0	464.5	504.5	521.0	556.0	531.0	556.0
kB	351.5	394.0	413.0	463.0	498.0	534.5	574.5	599.5	634.5	604.0	629.0
LB	194.0	226.0	245.0	290.0	325.0	351.5	391.5	408.0	443.0	418.0	443.0
LBL	238.5	281.0	300.0	350.0	385.0	421.5	461.5	486.5	521.5	491.0	516.0

① ISO 4014 ② DIN 5480 ③ DIN 332-D ④ DIN 332 ⑤ Feather key/keyway DIN 6885-1 ⑦ ISO 4762 ⑧ Without locating shoulder +1 mm

[1] AD depends on the motor options, for other dimensions see page 8/36. [2] FDADS/FZADS not possible * Spring compression at max. torque

© Siemens AG 2017

FD.Z./FZ.Z.39 gearbox in a housing flange design

FZ030, FAZ030, FAZS030, FAZT030

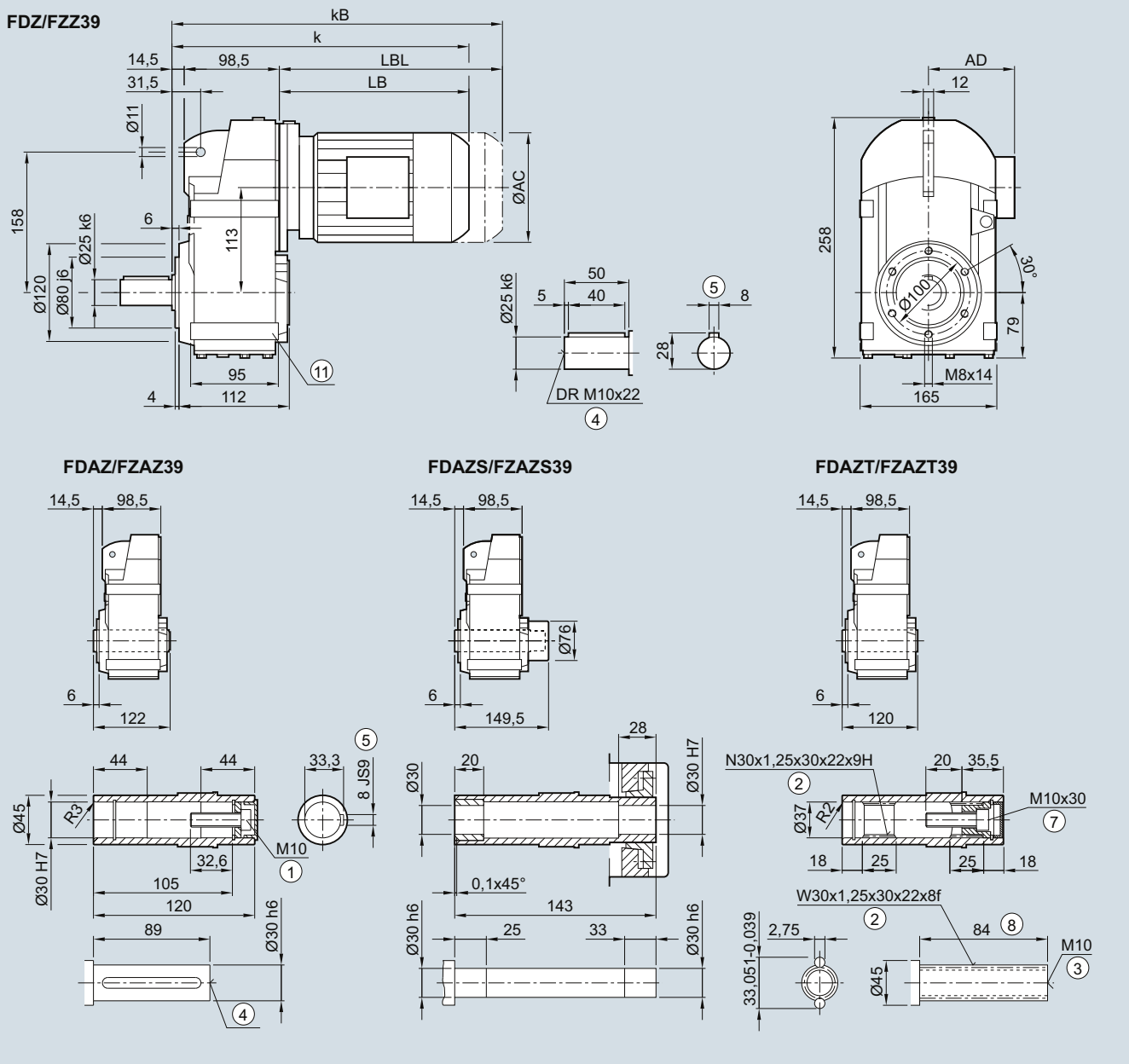

Motor	LA 63	71	71Z	LE 80	80Z	90	90Z	100[2)]	100Z[2)]	112[2)]	112Z[2)]
AC	117.8	138.8	138.8	156.3	156.3	173.8	173.8	198.0	198.0	222.0	222.0
AD[1)]	124.0	134.0	134.0	149.2	149.2	154.2	154.2	170.5	170.5	181.5	181.5
k	307.0	339.0	358.0	403.0	438.0	464.5	504.5	521.0	556.0	531.0	556.0
kB	351.5	394.0	413.0	463.0	498.0	534.5	574.5	599.5	634.5	604.0	629.0
LB	194.0	226.0	245.0	290.0	325.0	351.5	391.5	408.0	443.0	418.0	443.0
LBL	238.5	281.0	300.0	350.0	385.0	421.5	461.5	486.5	521.5	491.0	516.0

① ISO 4014 ② DIN 5480 ③ DIN 332-D ④ DIN 332 ⑤ Feather key/keyway DIN 6885-1 ⑦ ISO 4762 ⑧ Without locating shoulder +1 mm
⑪ Use bores only for foot-mounted design

1) AD depends on the motor options, for other dimensions see page 8/36.

2) FDADS/FZADS not possible

© Siemens AG 2017

4

FD.F./FZ.F.39 in a flange-mounted design

FF030, FAF030, FAFS030, FAFT030

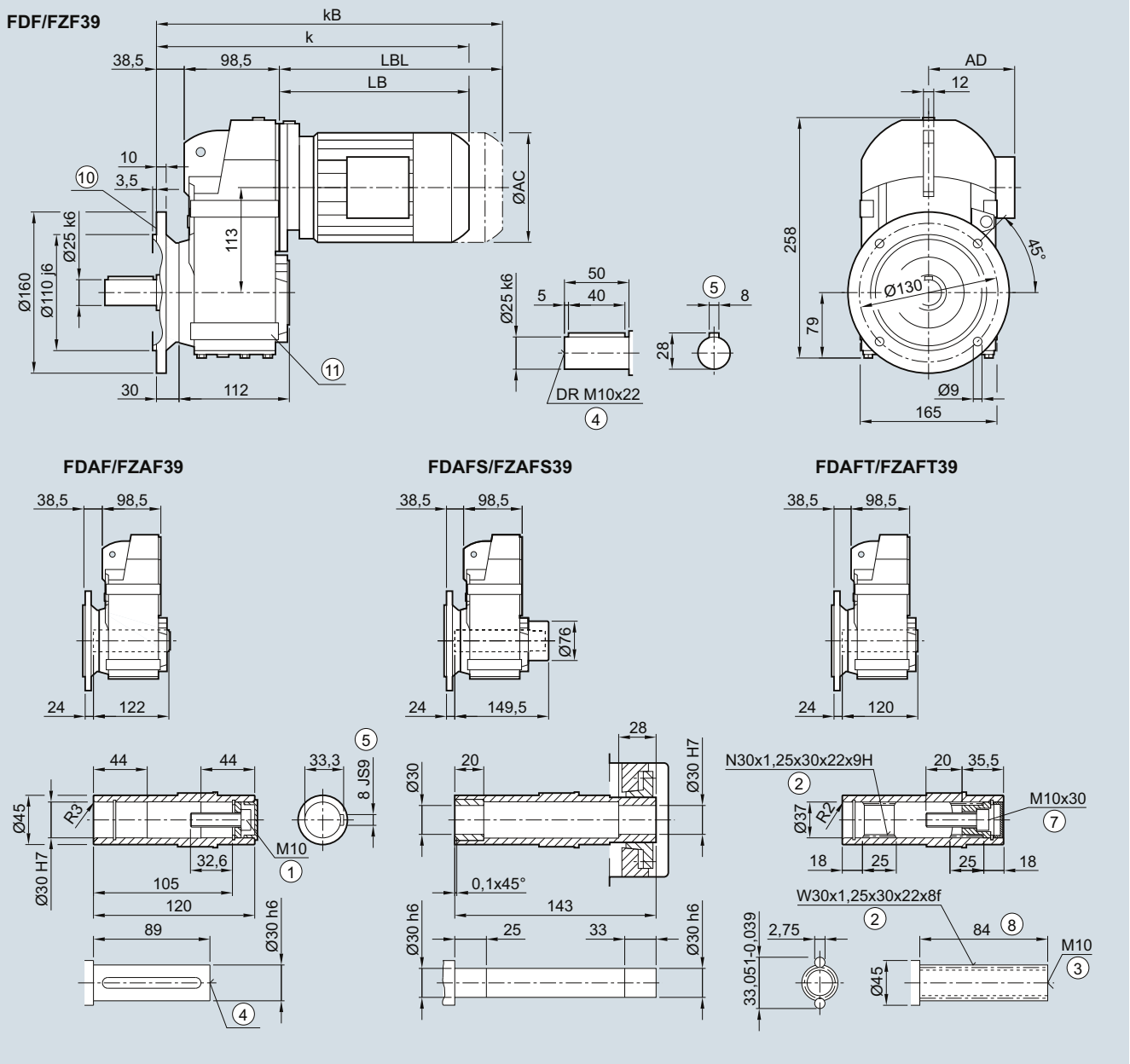

Motor	LA 63	71	71Z	LE 80	80Z	90	90Z	100[2]	100Z[2]	112[2]	112Z[2]
AC	117.8	138.8	138.8	156.3	156.3	173.8	173.8	198.0	198.0	222.0	222.0
AD[1]	124.0	134.0	134.0	149.2	149.2	154.2	154.2	170.5	170.5	181.5	181.5
k	331.0	363.0	382.0	427.0	462.0	488.5	528.5	545.0	580.0	555.0	580.0
kB	375.5	418.0	437.0	487.0	522.0	558.5	598.5	623.5	658.5	628.0	653.0
LB	194.0	226.0	245.0	290.0	325.0	351.5	391.5	408.0	443.0	418.0	443.0
LBL	238.5	281.0	300.0	350.0	385.0	421.5	461.5	486.5	521.5	491.0	516.0

① ISO 4014 ② DIN 5480 ③ DIN 332-D ④ DIN 332 ⑤ Feather key/keyway DIN 6885-1 ⑦ ISO 4762 ⑧ Without locating shoulder +1 mm
⑩ For inner contour see page 4/123 ⑪ Use bores only for foot-mounted design
[1] AD depends on the motor options, for other dimensions see page 8/36. [2] FADAFS/FZAFS not possible

© Siemens AG 2017

FD../FZ..39 gearbox in a foot-mounted design

F030, FA030, FAS030, FAT030

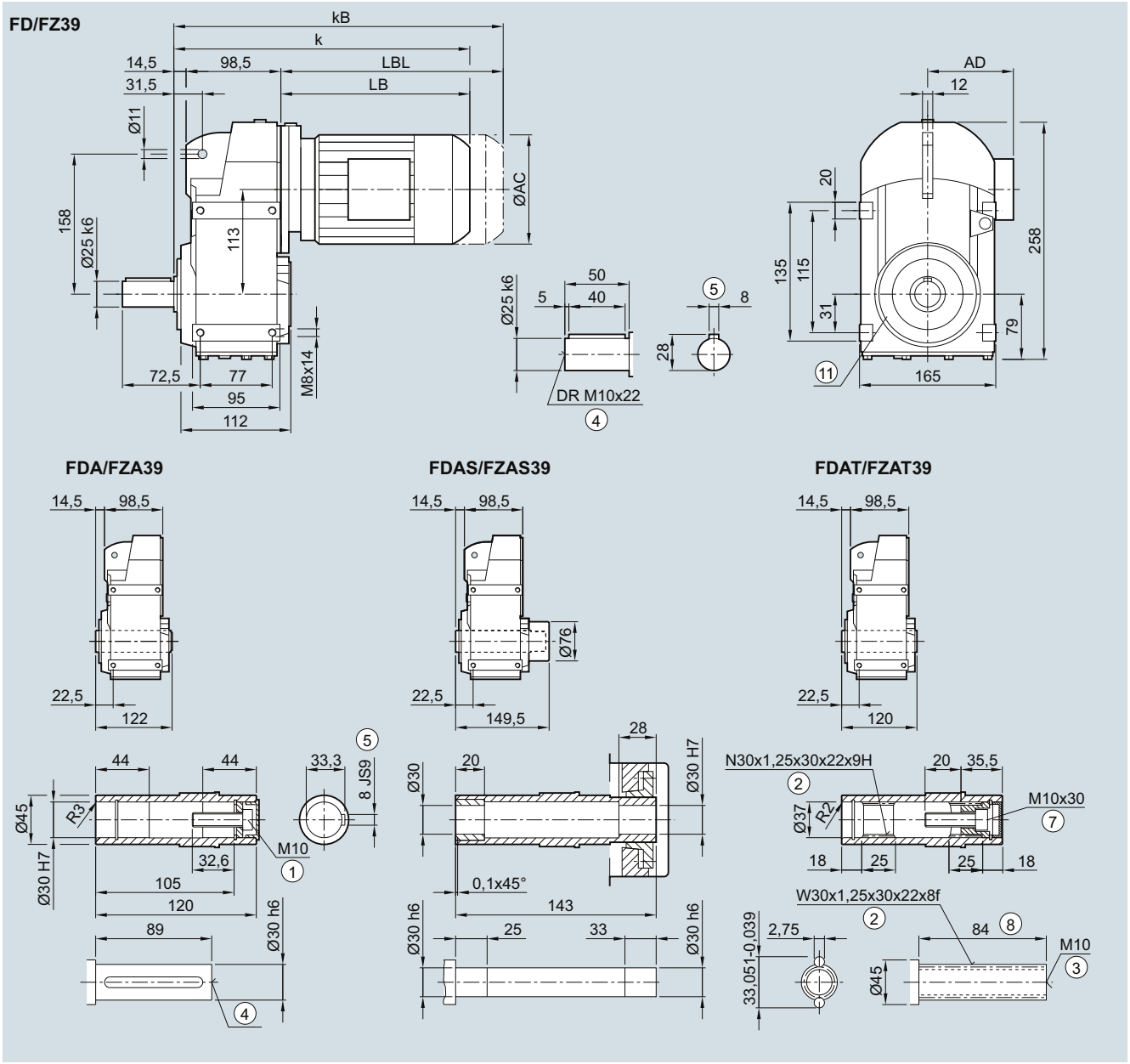

Motor	LA 63	71	71Z	LE 80	80Z	90	90Z	100[2]	100Z[2]	112[2]	112Z[2]
AC	117.8	138.8	138.8	156.3	156.3	173.8	173.8	198.0	198.0	222.0	222.0
AD[1]	124.0	134.0	134.0	149.2	149.2	154.2	154.2	170.5	170.5	181.5	181.5
k	307.0	339.0	358.0	403.0	438.0	464.5	504.5	521.0	556.0	531.0	556.0
kB	351.5	394.0	413.0	463.0	498.0	534.5	574.5	599.5	634.5	604.0	629.0
LB	194.0	226.0	245.0	290.0	325.0	351.5	391.5	408.0	443.0	418.0	443.0
LBL	238.5	281.0	300.0	350.0	385.0	421.5	461.5	486.5	521.5	491.0	516.0

① ISO 4014 ② DIN 5480 ③ DIN 332-D ④ DIN 332 ⑤ Feather key/keyway DIN 6885-1 ⑦ ISO 4762 ⑧ Without locating shoulder +1 mm
⑪ Use bores only for housing flange design

[1] AD depends on the motor options, for other dimensions see page 8/36.

[2] FDAS/FZAS not possible

© Siemens AG 2017

FDAD./FZAD.49 gearbox in a shaft-mounted design

FAD030, FADS030, FADT030

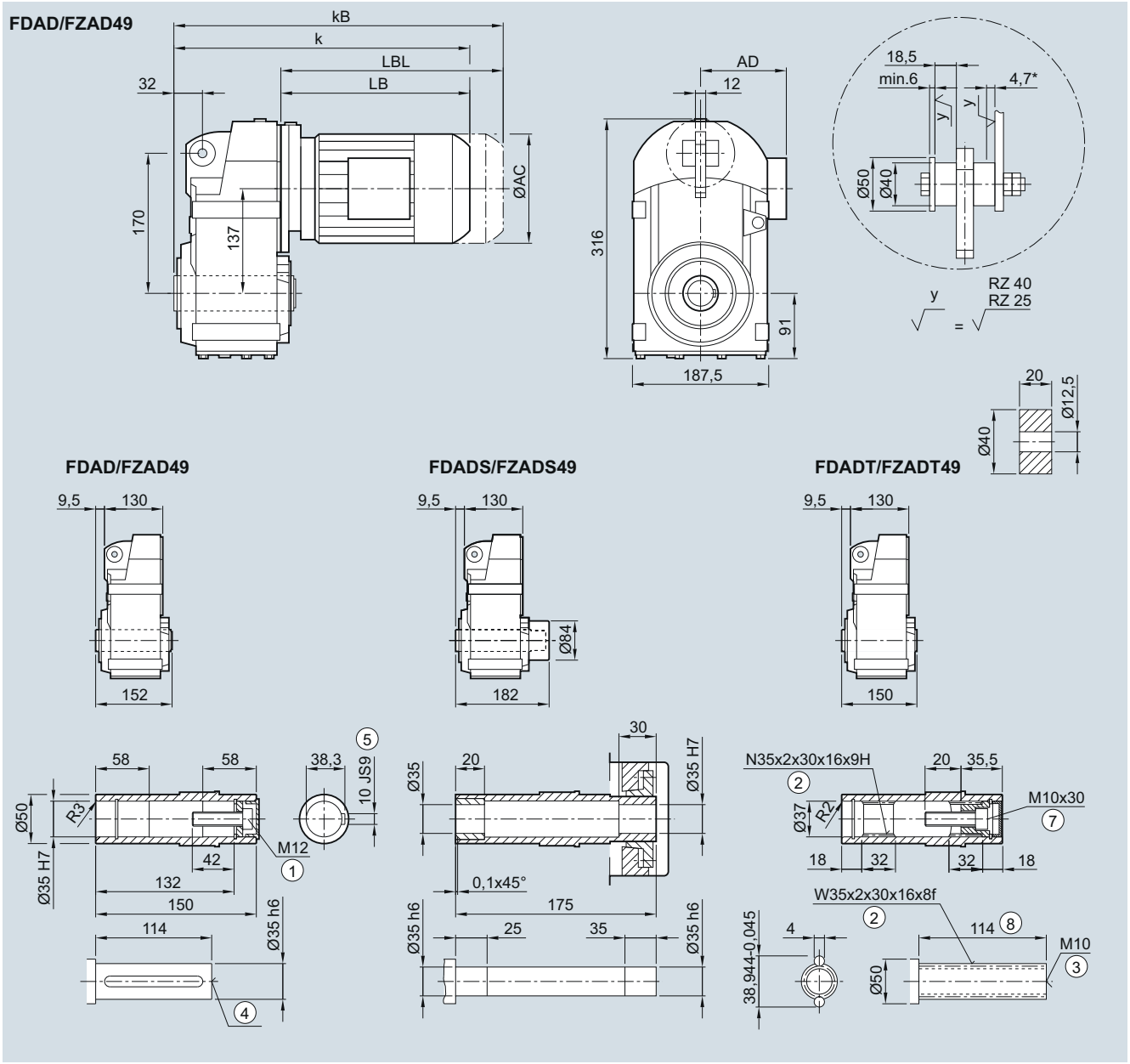

Motor	LA			LE									
	63	71	71Z	80	80Z	90	90Z	100	100Z	112[2)]	112Z[2)]	132[2)]	132Z[2)]
AC	117.8	138.8	138.8	156.3	156.3	173.8	173.8	198.0	198.0	222.0	222.0	264.0	264.0
AD[1)]	124.0	134.0	134.0	149.2	149.2	154.2	154.2	170.5	170.5	181.5	181.5	207.0	207.0
k	324.0	356.0	375.0	420.0	455.0	481.5	521.5	538.0	573.0	548.0	582.5	601.0	651.0
kB	368.5	411.0	430.0	480.0	515.0	551.5	591.5	616.5	651.5	621.0	655.5	705.5	755.5
LB	184.5	216.5	235.5	280.5	315.5	342.0	382.0	398.5	433.5	408.5	443.0	461.5	511.5
LBL	229.0	271.5	290.5	340.5	375.5	412.0	452.0	477.0	512.0	481.5	516.0	566.0	616.0

① ISO 4014 ② DIN 5480 ③ DIN 332-D ④ DIN 332 ⑤ Feather key/keyway DIN 6885-1 ⑦ ISO 4762 ⑧ Without locating shoulder +1 mm
1) AD depends on the motor options, for other dimensions see page 8/36. 2) FDADS/FZADS not possible * Spring compression at max. torque

© Siemens AG 2017

FD.Z./FZ.Z.49 gearbox in a housing flange design

FZ030, FAZ030, FAZS030, FAZT030

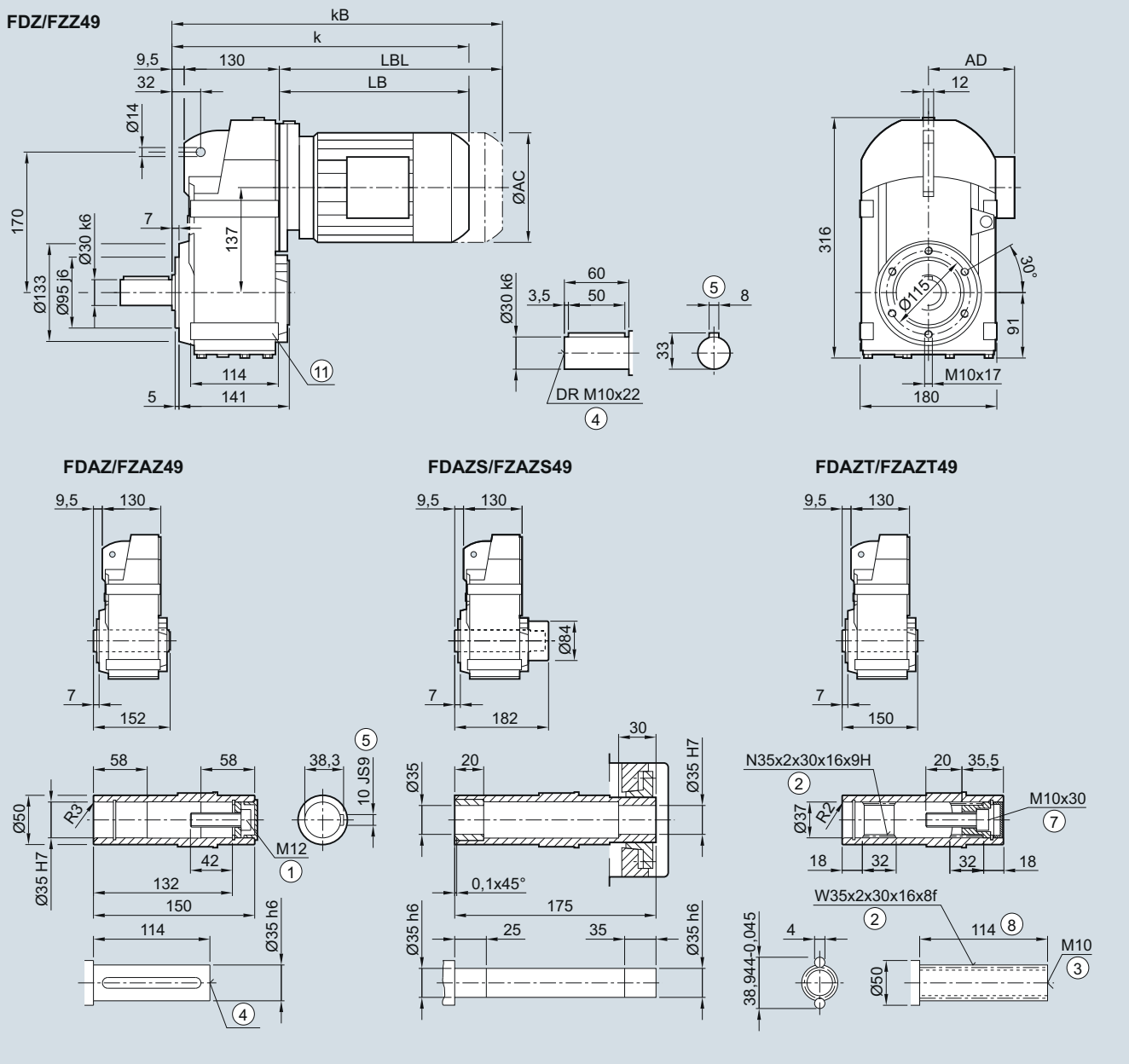

Motor	LA 63	71	71Z	LE 80	80Z	90	90Z	100	100Z	112[2)]	112Z[2)]	132[2)]	132Z[2)]
AC	117.8	138.8	138.8	156.3	156.3	173.8	173.8	198.0	198.0	222.0	222.0	264.0	264.0
AD[1)]	124.0	134.0	134.0	149.2	149.2	154.2	154.2	170.5	170.5	181.5	181.5	207.0	207.0
k	324.0	356.0	375.0	420.0	455.0	481.5	521.5	538.0	573.0	548.0	582.5	601.0	651.0
kB	368.5	411.0	430.0	480.0	515.0	551.5	591.5	616.5	651.5	621.0	655.5	705.5	755.5
LB	184.5	216.5	235.5	280.5	315.5	342.0	382.0	398.5	433.5	408.5	443.0	461.5	511.5
LBL	229.0	271.5	290.5	340.5	375.5	412.0	452.0	477.0	512.0	481.5	516.0	566.0	616.0

① ISO 4014 ② DIN 5480 ③ DIN 332-D ④ DIN 332 ⑤ Feather key/keyway DIN 6885-1 ⑦ ISO 4762 ⑧ Without locating shoulder +1 mm
⑪ Use bores only for foot-mounted design

1) AD depends on the motor options, for other dimensions see page 8/36.

2) FDAZS/FZAZS not possible

© Siemens AG 2017

4

FD.F./FZ.F.49 gearbox in a flange-mounted design

FF030, FAF030, FAFS030, FAFT030

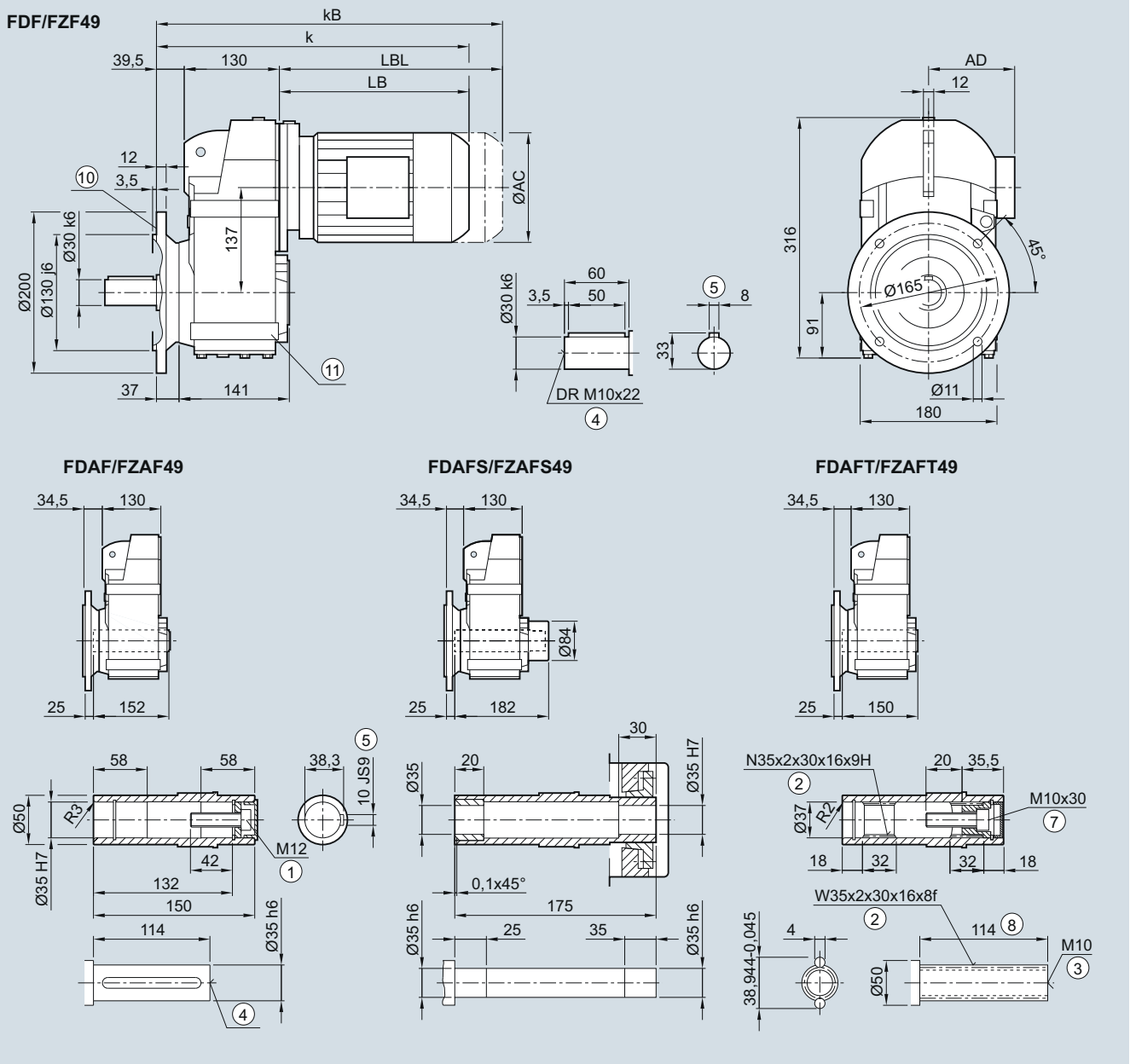

Motor	LA 63	71	71Z	LE 80	80Z	90	90Z	100	100Z	112[2)]	112Z[2)]	132[2)]	132Z[2)]
AC	117.8	138.8	138.8	156.3	156.3	173.8	173.8	198.0	198.0	222.0	222.0	264.0	264.0
AD[1)]	124.0	134.0	134.0	149.2	149.2	154.2	154.2	170.5	170.5	181.5	181.5	207.0	207.0
k	354.0	386.0	394.0	450.0	485.0	511.5	551.5	568.0	603.0	578.0	612.5	631.0	681.0
kB	398.5	441.0	460.0	510.0	545.0	581.5	621.5	646.5	681.5	651.0	685.5	735.5	785.5
LB	184.5	216.5	235.5	280.5	315.5	342.0	382.0	398.5	433.5	408.5	443.0	461.5	511.5
LBL	229.0	271.5	290.5	340.5	375.5	412.0	452.0	477.0	512.0	481.5	516.0	566.0	616.0

① ISO 4014 ② DIN 5480 ③ DIN 332-D ④ DIN 332 ⑤ Feather key/keyway DIN 6885-1 ⑦ ISO 4762 ⑧ Without locating shoulder +1 mm
⑩ For inner contour see page 4/123 ⑪ Use bores only for foot-mounted design
1) AD depends on the motor options, for other dimensions see page 8/36. 2) FADAFS/FZAFS not possible

© Siemens AG 2017

FD../FZ..49 gearbox in a foot-mounted design

F030, FA030, FAS030, FAT030

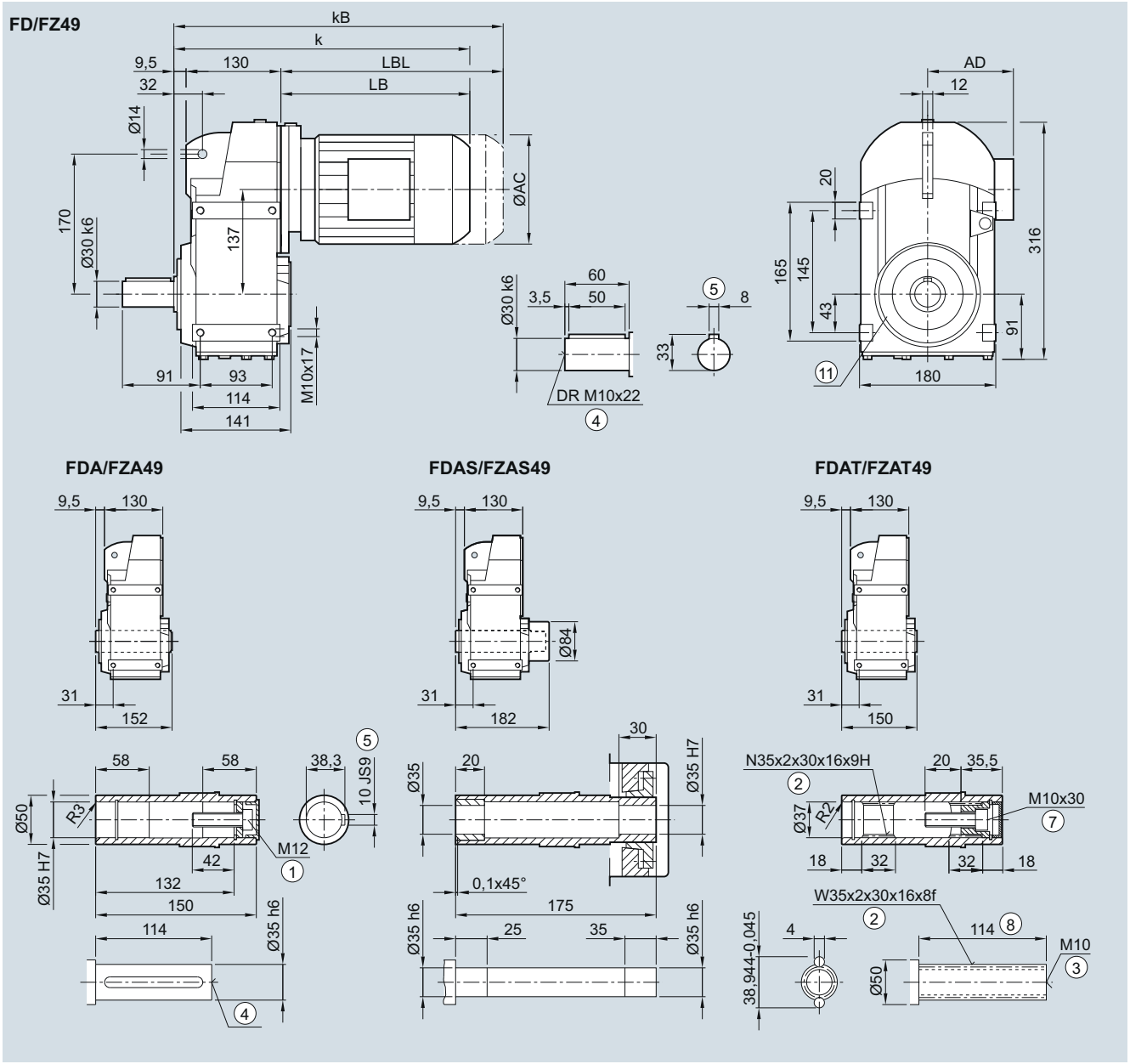

Motor	LA 63	71	71Z	LE 80	80Z	90	90Z	100	100Z	112[2)]	112Z[2)]	132[2)]	132Z[2)]
AC	117.8	138.8	138.8	156.3	156.3	173.8	173.8	198.0	198.0	222.0	222.0	264.0	264.0
AD[1)]	124.0	134.0	134.0	149.2	149.2	154.2	154.2	170.5	170.5	181.5	181.5	207.0	207.0
k	324.0	356.0	375.0	420.0	455.0	481.5	521.5	538.0	573.0	548.0	582.5	601.0	651.0
kB	368.5	411.0	430.0	480.0	515.0	551.5	591.5	616.5	651.5	621.0	655.5	705.5	755.5
LB	184.5	216.5	235.5	280.5	315.5	342.0	382.0	398.5	433.5	408.5	443.0	461.5	511.5
LBL	229.0	271.5	290.5	340.5	375.5	412.0	452.0	477.0	512.0	481.5	516.0	566.0	616.0

① ISO 4014 ② DIN 5480 ③ DIN 332-D ④ DIN 332 ⑤ Feather key/keyway DIN 6885-1 ⑦ ISO 4762 ⑧ Without locating shoulder +1 mm
⑪ Use bores only for housing flange design

1) AD depends on the motor options, for other dimensions see page 8/36.

2) FDAS/FZAS not possible

© Siemens AG 2017

FDAD./FZAD.69 gearbox in a shaft-mounted design

FAD030, FADS030, FADT030

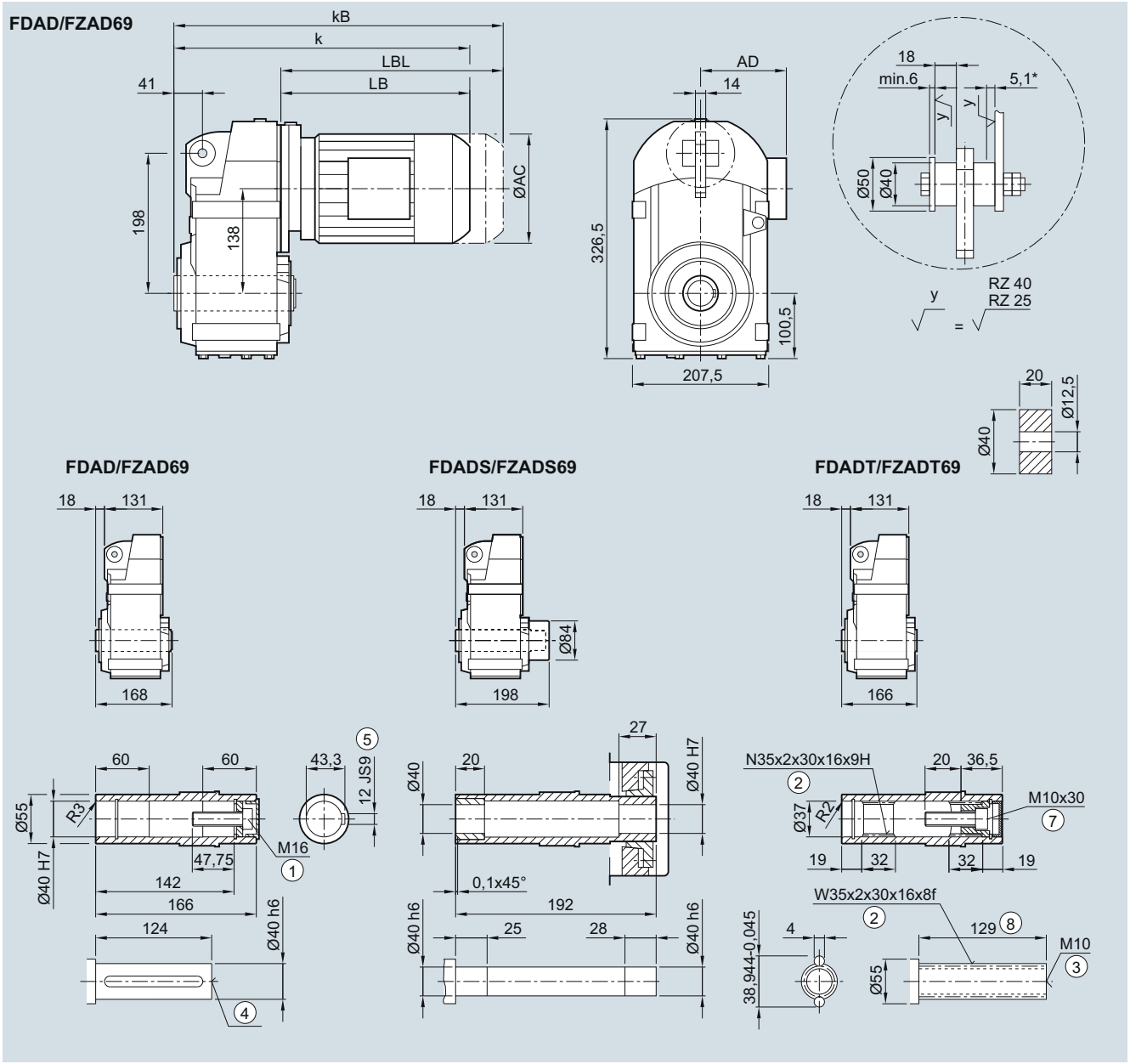

Motor	LA			LE									
	63	71	71Z	80	80Z	90	90Z	100	100Z	112[2)]	112Z[2)]	132[2)]	132Z[2)]
AC	117.8	138.8	138.8	156.3	156.3	173.8	173.8	198.0	198.0	222.0	222.0	264.0	264.0
AD[1)]	124.0	134.0	134.0	149.2	149.2	154.2	154.2	170.5	170.5	181.5	181.5	207.0	207.0
k	333.5	365.5	384.5	429.5	464.5	491.0	531.0	547.5	582.5	557.5	592.0	610.5	660.5
kB	378.0	420.5	439.5	489.5	524.5	561.0	601.0	626.0	661.0	630.5	665.0	715.0	765.0
LB	184.5	216.5	235.5	280.5	315.5	342.0	382.0	398.5	433.5	408.5	443.0	461.5	511.5
LBL	229.0	271.5	290.5	340.5	375.5	412.0	452.0	477.0	512.0	481.5	516.0	566.0	616.0

① ISO 4014 ② DIN 5480 ③ DIN 332-D ④ DIN 332 ⑤ Feather key/keyway DIN 6885-1 ⑦ ISO 4762 ⑧ Without locating shoulder +1 mm
1) AD depends on the motor options, for other dimensions see page 8/36. 2) FDADS/FZADS not possible * Spring compression at max. torque

© Siemens AG 2017

FD.Z./FZ.Z.69 gearbox in a housing flange design

FZ030, FAZ030, FAZS030, FAZT030

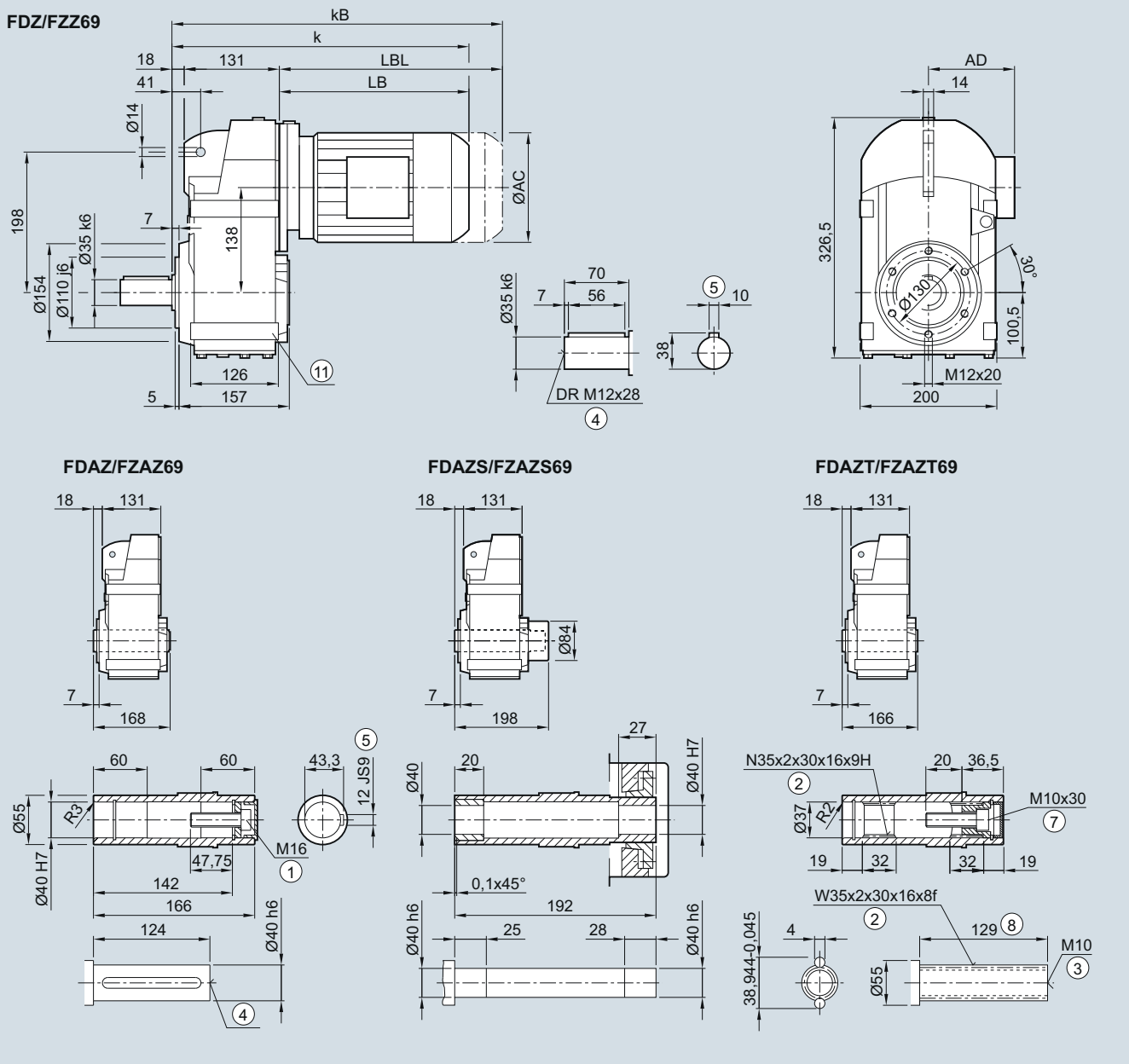

Motor	LA 63	71	71Z	LE 80	80Z	90	90Z	100	100Z	112[2)]	112Z[2)]	132[2)]	132Z[2)]
AC	117.8	138.8	138.8	156.3	156.3	173.8	173.8	198.0	198.0	222.0	222.0	264.0	264.0
AD[1)]	124.0	134.0	134.0	149.2	149.2	154.2	154.2	170.5	170.5	181.5	181.5	207.0	207.0
k	333.5	365.5	384.5	429.5	464.5	491.0	531.0	547.5	582.5	557.5	592.0	610.5	660.5
kB	378.0	420.5	439.5	489.5	524.5	561.0	601.0	626.0	661.0	630.5	665.0	715.0	765.0
LB	184.5	216.5	235.5	280.5	315.5	342.0	382.0	398.5	433.5	408.5	443.0	461.5	511.5
LBL	229.0	271.5	290.5	340.5	375.5	412.0	452.0	477.0	512.0	481.5	516.0	566.0	616.0

① ISO 4014 ② DIN 5480 ③ DIN 332-D ④ DIN 332 ⑤ Feather key/keyway DIN 6885-1 ⑦ ISO 4762 ⑧ Without locating shoulder +1 mm
⑪ Use bores only for foot-mounted design

1) AD depends on the motor options, for other dimensions see page 8/36.

2) FDAZS/FZAZS not possible

© Siemens AG 2017

4

FD.F./FZ.F.69 gearbox in a flange-mounted design

FF030, FAF030, FAFS030, FAFT030

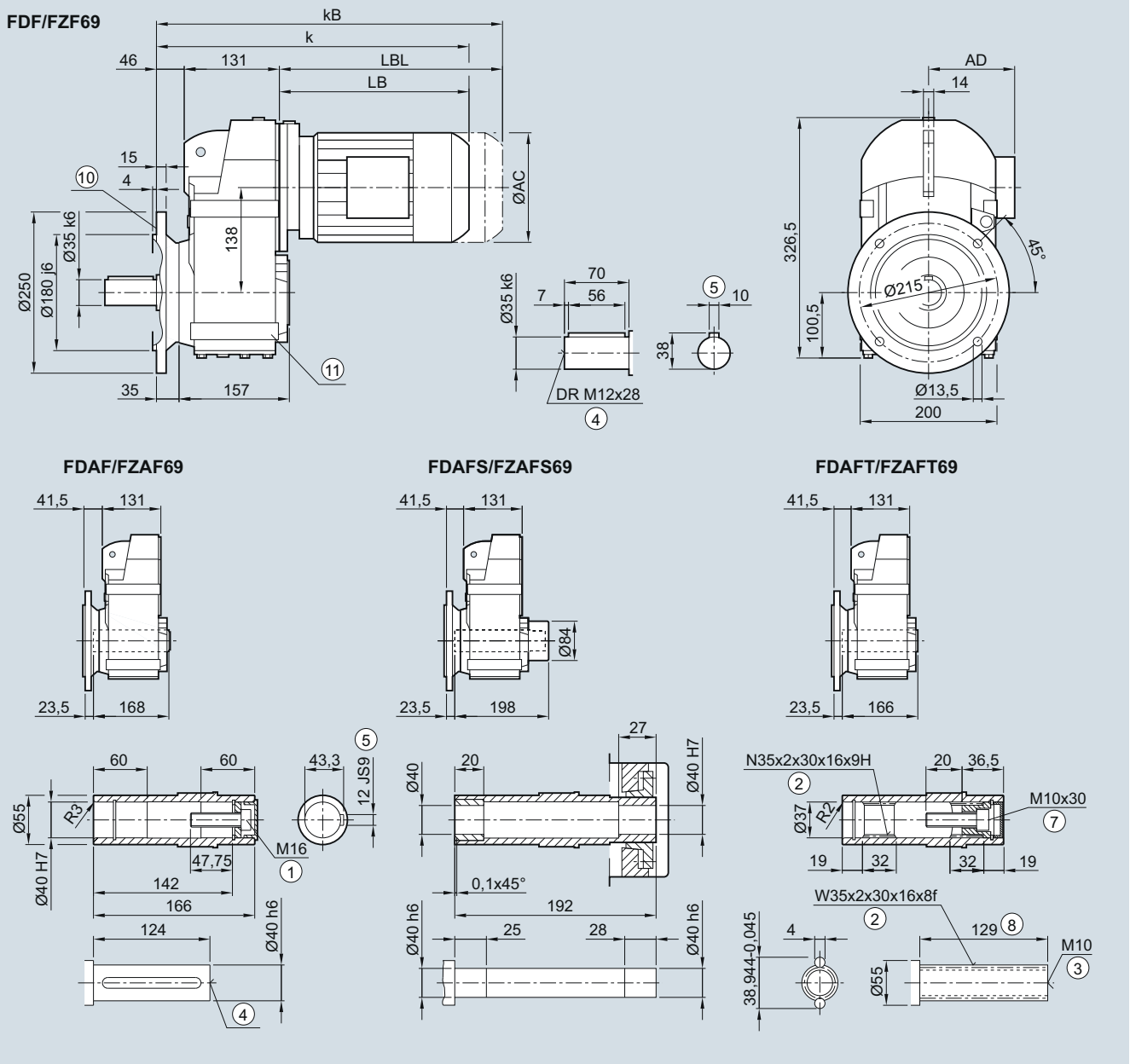

Motor	LA 63	71	71Z	LE 80	80Z	90	90Z	100	100Z	112[2)]	112Z[2)]	132[2)]	132Z[2)]
AC	117.8	138.8	138.8	156.3	156.3	173.8	173.8	198.0	198.0	222.0	222.0	264.0	264.0
AD[1)]	124.0	134.0	134.0	149.2	149.2	154.2	154.2	170.5	170.5	181.5	181.5	207.0	207.0
k	361.5	393.5	412.5	457.5	492.5	519.0	559.0	575.5	610.5	585.5	620.0	638.5	688.5
kB	406.0	448.5	467.5	517.5	552.5	589.0	629.0	654.0	689.0	658.5	693.0	743.0	793.0
LB	184.5	216.5	235.5	280.5	315.5	342.0	382.0	398.5	433.5	408.5	443.0	461.5	511.5
LBL	229.0	271.5	290.5	340.5	375.5	412.0	452.0	477.0	512.0	481.5	516.0	566.0	616.0

① ISO 4014 ② DIN 5480 ③ DIN 332-D ④ DIN 332 ⑤ Feather key/keyway DIN 6885-1 ⑦ ISO 4762 ⑧ Without locating shoulder +1 mm
⑩ For inner contour see page 4/123 ⑪ Use bores only for foot-mounted design
1) AD depends on the motor options, for other dimensions see page 8/36. 2) FADAFS/FZAFS not possible

© Siemens AG 2017

FD../FZ..69 gearbox in a foot-mounted design

F030, FA030, FAS030, FAT030

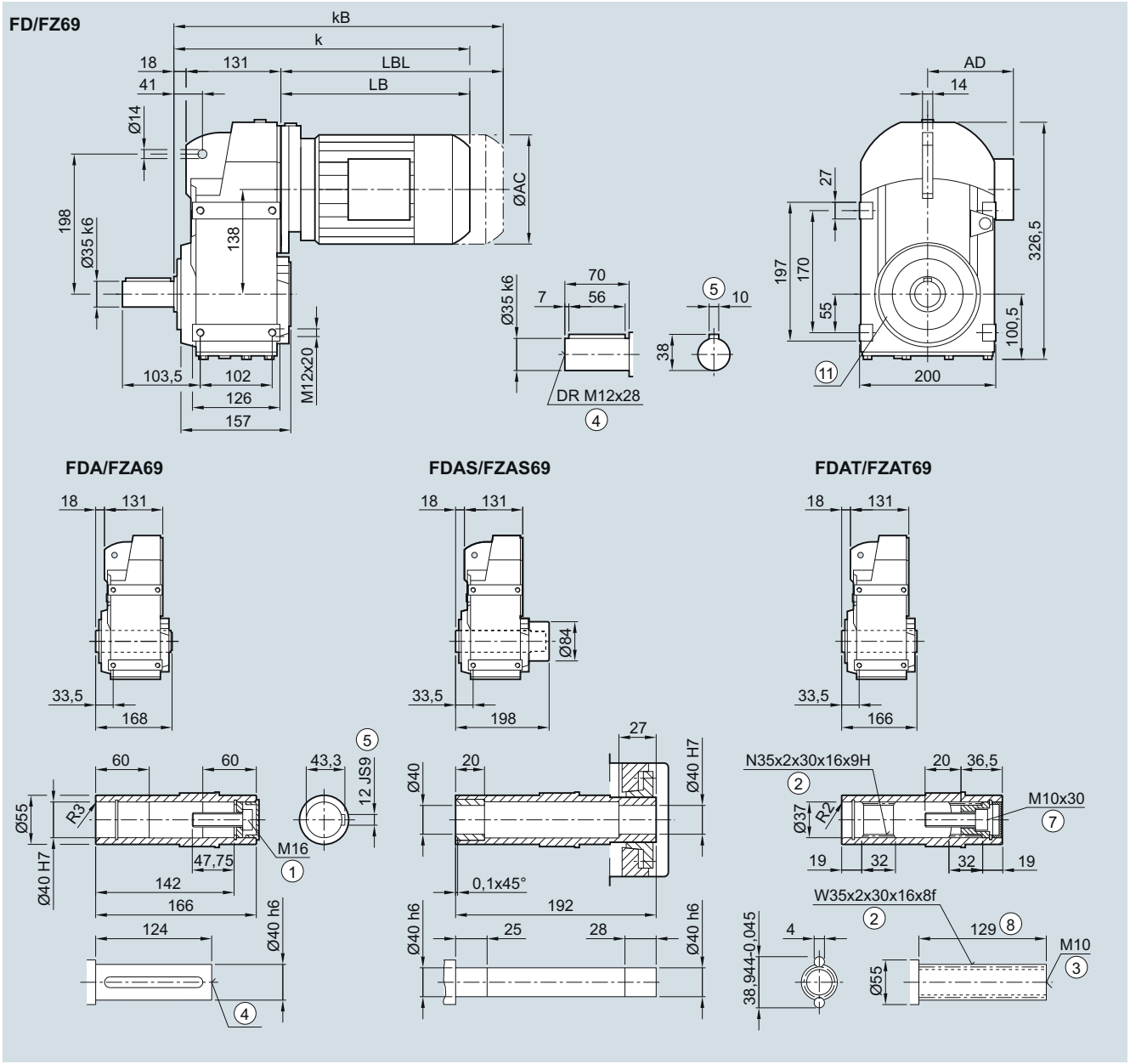

Motor	LA 63	71	71Z	LE 80	80Z	90	90Z	100	100Z	112[2)]	112Z[2)]	132[2)]	132Z[2)]
AC	117.8	138.8	138.8	156.3	156.3	173.8	173.8	198.0	198.0	222.0	222.0	264.0	264.0
AD[1)]	124.0	134.0	134.0	149.2	149.2	154.2	154.2	170.5	170.5	181.5	181.5	207.0	207.0
k	333.5	365.5	384.5	429.5	464.5	491.0	531.0	547.5	582.5	557.5	592.0	610.5	660.5
kB	378.0	420.5	439.5	489.5	524.5	561.0	601.0	626.0	661.0	630.5	665.0	715.0	765.0
LB	184.5	216.5	235.5	280.5	315.5	342.0	382.0	398.5	433.5	408.5	443.0	461.5	511.5
LBL	229.0	271.5	290.5	340.5	375.5	412.0	452.0	477.0	512.0	481.5	516.0	566.0	616.0

① ISO 4014 ② DIN 5480 ③ DIN 332-D ④ DIN 332 ⑤ Feather key/keyway DIN 6885-1 ⑦ ISO 4762 ⑧ Without locating shoulder +1 mm
⑪ Use bores only for housing flange design

1) AD depends on the motor options, for other dimensions see page 8/36.

2) FDAS/FZAS not possible

© Siemens AG 2017

FDAD./FZAD.79 gearbox in a shaft-mounted design

FAD030, FADS030, FADT030

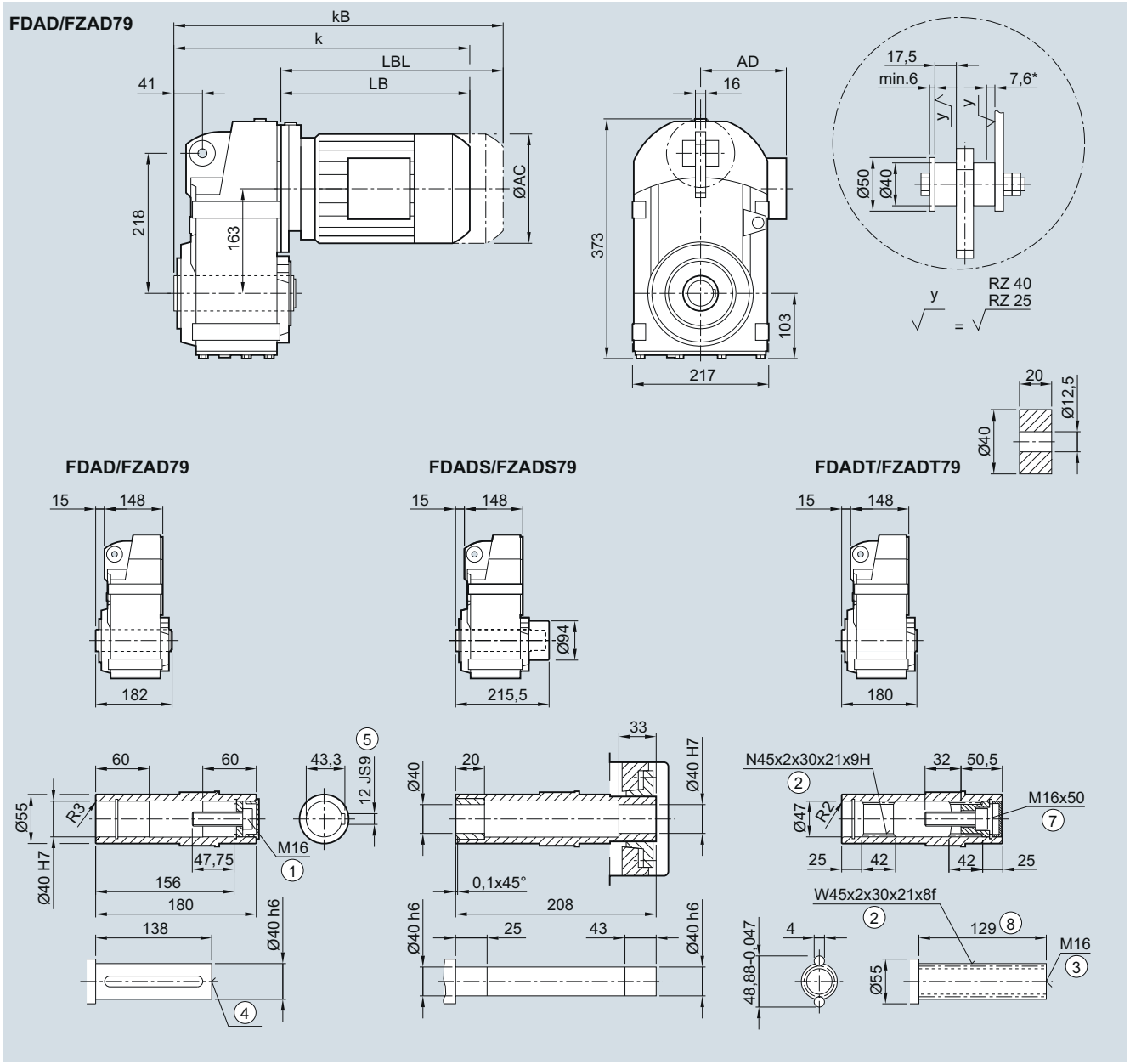

Motor	LA 71	71Z	LE 80	80Z	90	90Z	100	100Z	112	112Z	132	132Z	160[2]	160Z[2]
AC	138.8	138.8	156.3	156.3	173.8	173.8	198.0	198.0	222.0	222.0	264.0	264.0	318.0	318.0
AD[1]	134.0	134.0	149.2	149.2	154.2	154.2	170.5	170.5	181.5	181.5	207.0	207.0	241.0	241.0
k	377.5	396.5	437.5	472.5	499.0	539.0	555.5	590.5	565.5	590.5	618.5	668.5	700.5	760.5
kB	432.5	451.5	497.5	532.5	569.0	609.0	634.0	669.0	638.5	663.5	723.0	773.0	816.5	876.5
LB	214.5	233.5	274.5	309.5	336.0	376.0	392.5	427.5	402.5	427.5	455.5	505.5	537.5	597.5
LBL	269.5	288.5	334.5	369.5	406.0	446.0	471.0	506.0	475.5	500.5	560.0	610.0	653.5	713.5

① ISO 4014 ② DIN 5480 ③ DIN 332-D ④ DIN 332 ⑤ Feather key/keyway DIN 6885-1 ⑦ ISO 4762 ⑧ Without locating shoulder +1 mm
[1] AD depends on the motor options, for other dimensions see page 8/36. [2] FDAS/FZAS not possible * Spring compression at max. torque

© Siemens AG 2017

FD.Z./FZ.Z.79 gearbox in a housing flange design

FZ030, FAZ030, FAZS030, FAZT030

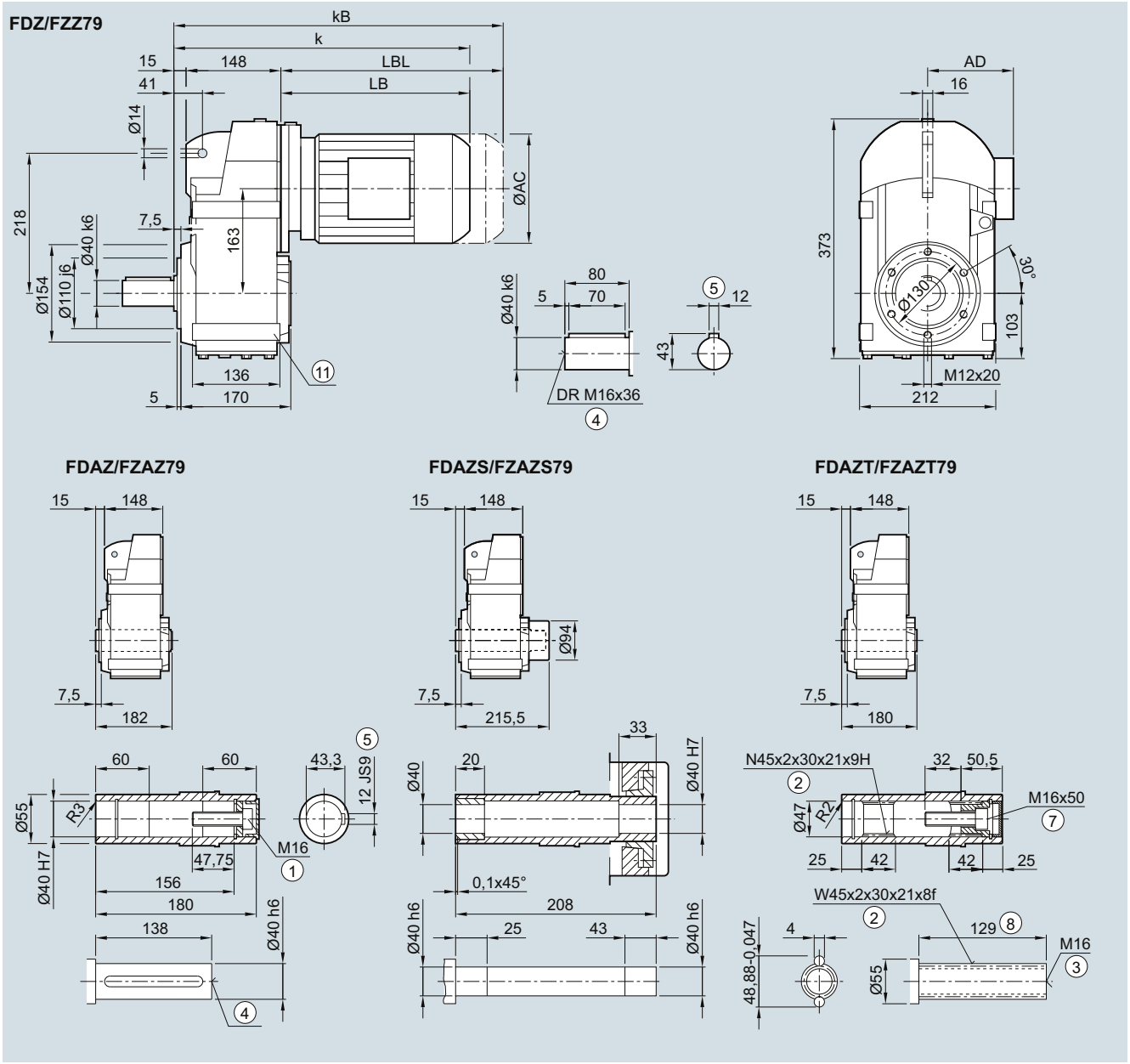

Motor	LA 71	71Z	LE 80	80Z	90	90Z	100	100Z	112	112Z	132	132Z	160[2)]	160Z[2)]
AC	138.8	138.8	156.3	156.3	173.8	173.8	198.0	198.0	222.0	222.0	264.0	264.0	318.0	318.0
AD[1)]	134.0	134.0	149.2	149.2	154.2	154.2	170.5	170.5	181.5	181.5	207.0	207.0	241.0	241.0
k	377.5	396.5	437.5	472.5	499.0	539.0	555.5	590.5	565.5	590.5	618.5	668.5	700.5	760.5
kB	432.5	451.5	497.5	532.5	569.0	609.0	634.0	669.0	638.5	663.5	723.0	773.0	816.5	876.5
LB	214.5	233.5	274.5	309.5	336.0	376.0	392.5	427.5	402.5	427.5	455.5	505.5	537.5	597.5
LBL	269.5	288.5	334.5	369.5	406.0	446.0	471.0	506.0	475.5	500.5	560.0	610.0	653.5	713.5

① ISO 4014 ② DIN 5480 ③ DIN 332-D ④ DIN 332 ⑤ Feather key/keyway DIN 6885-1 ⑦ ISO 4762 ⑧ Without locating shoulder +1 mm
⑪ Use bores only for foot-mounted design

1) AD depends on the motor options, for other dimensions see page 8/36.

2) FDAZS/FZAZS not possible

© Siemens AG 2017

4

FD.F./FZ.F.79 gearbox in a flange-mounted design

FF030, FAF030, FAFS030, FAFT030

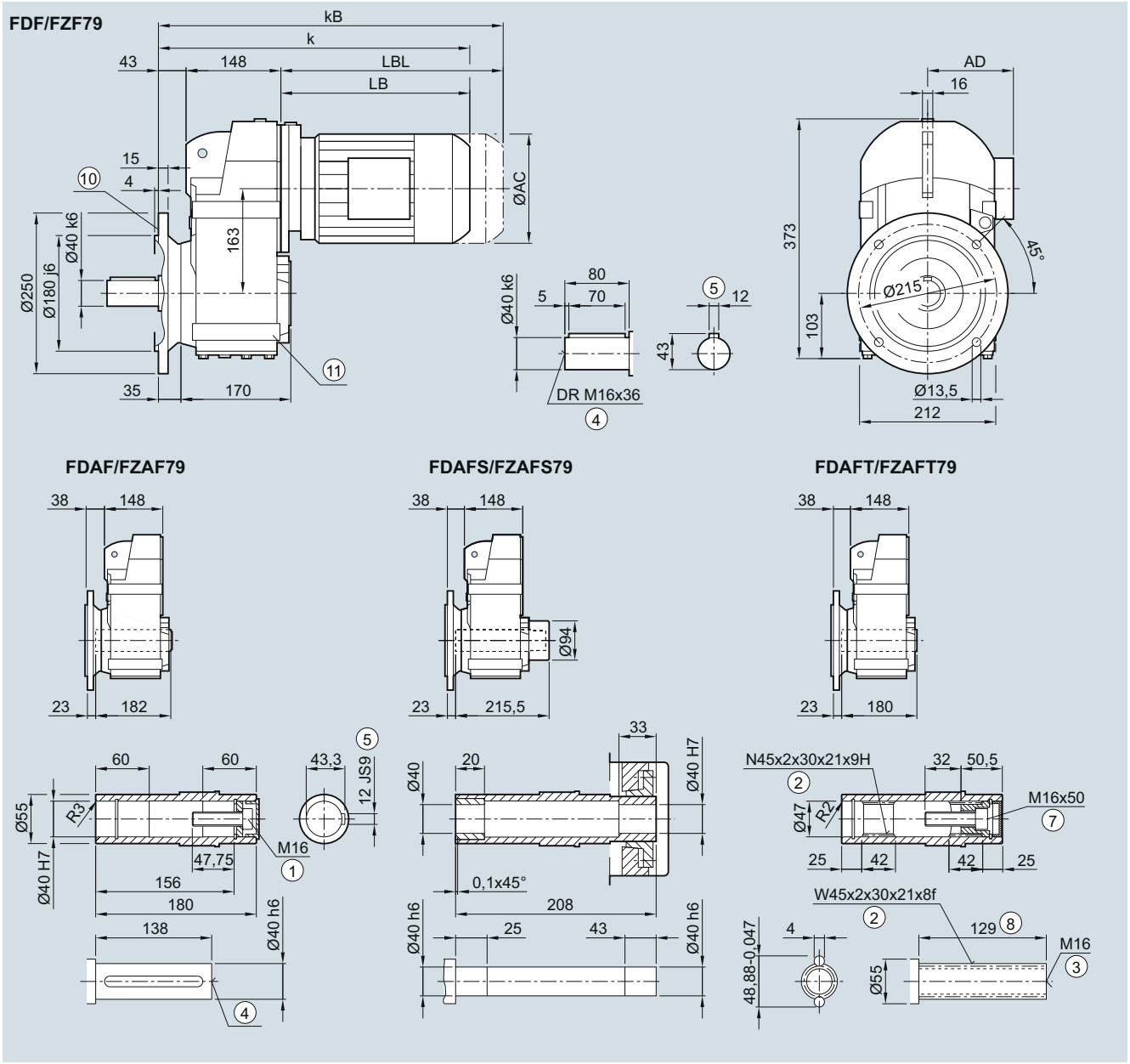

Motor	LA 71	71Z	LE 80	80Z	90	90Z	100	100Z	112	112Z	132	132Z	160[2]	160Z[2]
AC	138.8	138.8	156.3	156.3	173.8	173.8	198.0	198.0	222.0	222.0	264.0	264.0	318.0	318.0
AD[1]	134.0	134.0	149.2	149.2	154.2	154.2	170.5	170.5	181.5	181.5	207.0	207.0	241.0	241.0
k	405.5	424.5	465.5	500.5	527.0	567.0	583.5	618.5	593.5	618.5	646.5	696.5	728.5	788.5
kB	460.5	479.5	525.5	560.5	597.0	637.0	662.0	697.0	666.5	691.5	751.0	801.0	844.5	904.5
LB	214.5	233.5	274.5	309.5	336.0	376.0	392.5	427.5	402.5	427.5	455.5	505.5	537.5	597.5
LBL	269.5	288.5	334.5	369.5	406.0	446.0	471.0	506.0	475.5	500.5	560.0	610.0	653.5	713.5

① ISO 4014 ② DIN 5480 ③ DIN 332-D ④ DIN 332 ⑤ Feather key/keyway DIN 6885-1 ⑦ ISO 4762 ⑧ Without locating shoulder +1 mm
⑩ For inner contour see page 4/123 ⑪ Use bores only for foot-mounted design
[1] AD depends on the motor options, for other dimensions see page 8/36. [2] FADAFS/FZAFS not possible

© Siemens AG 2017

FD../FZ..79 gearbox in a foot-mounted design

F030, FA030, FAS030, FAT030

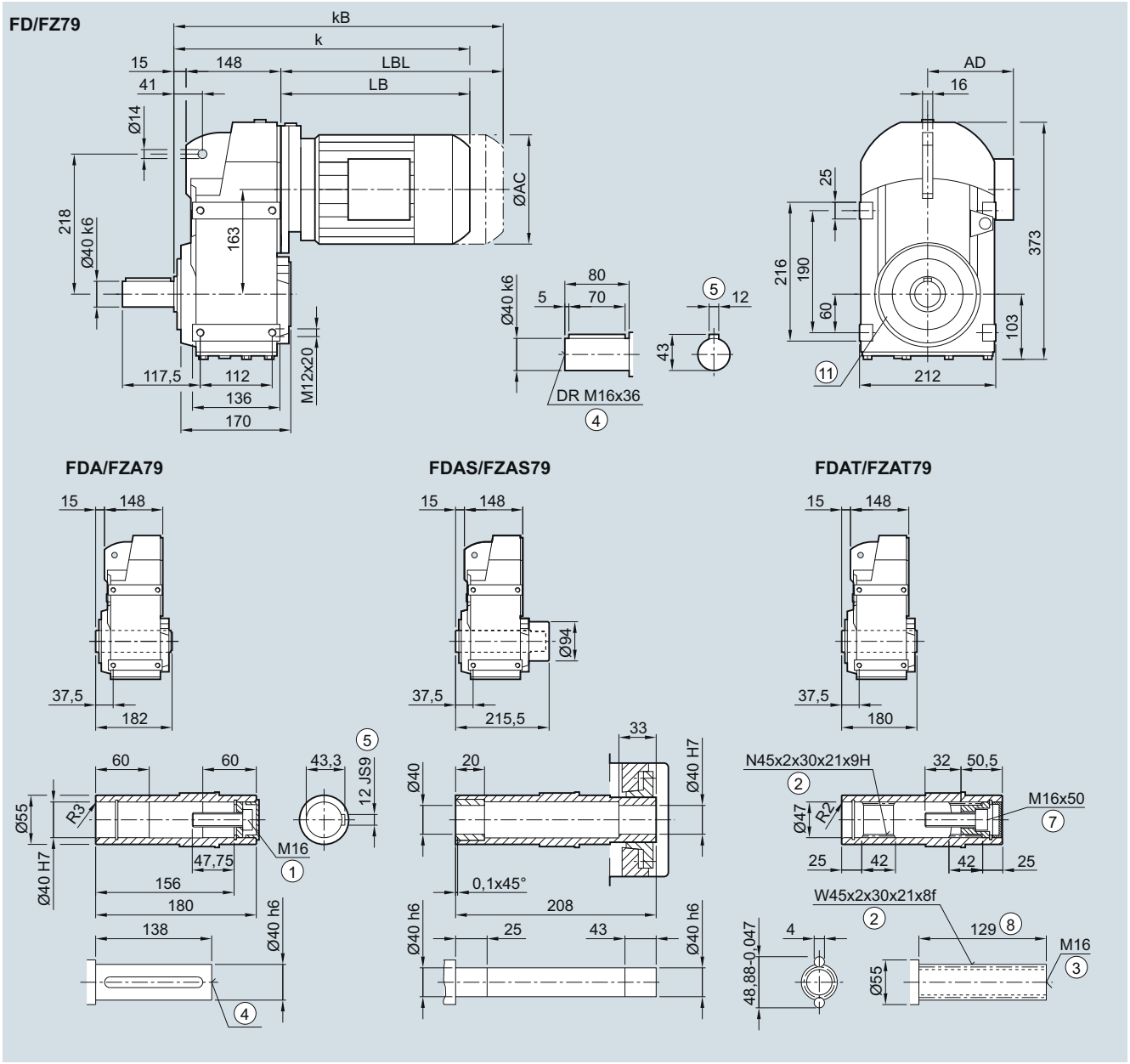

Motor	LA 71	71Z	LE 80	80Z	90	90Z	100	100Z	112	112Z	132	132Z	160[2)]	160Z[2)]
AC	138.8	138.8	156.3	156.3	173.8	173.8	198.0	198.0	222.0	222.0	264.0	264.0	318.0	318.0
AD[1)]	134.0	134.0	149.2	149.2	154.2	154.2	170.5	170.5	181.5	181.5	207.0	207.0	241.0	241.0
k	377.5	396.5	437.5	472.5	499.0	539.0	555.5	590.5	565.5	590.5	618.5	668.5	700.5	760.5
kB	432.5	451.5	497.5	532.5	569.0	609.0	634.0	669.0	638.5	663.5	723.0	773.0	816.5	876.5
LB	214.5	233.5	274.5	309.5	336.0	376.0	392.5	427.5	402.5	427.5	455.5	505.5	537.5	597.5
LBL	269.5	288.5	334.5	369.5	406.0	446.0	471.0	506.0	475.5	500.5	560.0	610.0	653.5	713.5

① ISO 4014 ② DIN 5480 ③ DIN 332-D ④ DIN 332 ⑤ Feather key/keyway DIN 6885-1 ⑦ ISO 4762 ⑧ Without locating shoulder +1 mm
⑪ Use bores only for housing flange design

1) AD depends on the motor options, for other dimensions see page 8/36.

2) FDAS/FZAS not possible

© Siemens AG 2017

FDAD./FZAD.89 gearbox in a shaft-mounted design

FAD030, FADS030, FADT030

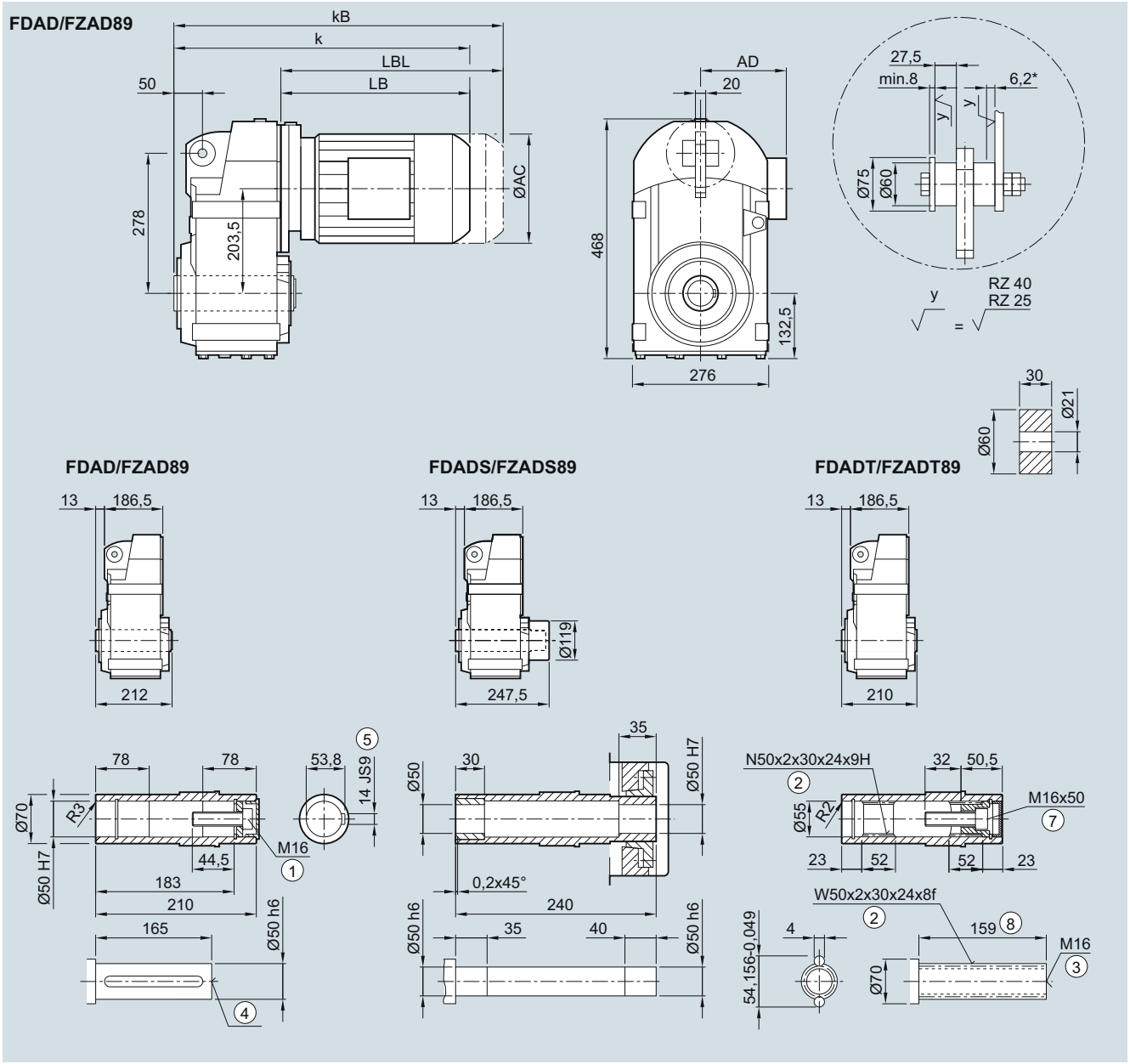

Motor	LE 80	80Z	90	90Z	100	100Z	112	112Z	132	132Z	160	160Z	LES 180[2]	180Z[2]
AC	156.3	156.3	173.8	173.8	198.0	198.0	222.0	222.0	264.0	264.0	318.0	318.0	352.5	352.5
AD[1]	149.2	149.2	154.2	154.2	170.5	170.5	181.5	181.5	207.0	207.0	241.0	241.0	292.0	292.0
k	461.0	496.0	522.5	562.5	575.0	610.0	585.0	610.0	638.0	688.0	720.0	780.0	793.0	823.0
kB	521.0	556.0	592.5	632.5	653.5	688.5	658.0	683.0	742.5	792.5	836.0	896.0	922.0	952.0
LB	261.5	296.5	323.0	363.0	375.5	410.5	385.5	410.5	438.5	488.5	520.5	580.5	593.5	623.5
LBL	321.5	356.5	393.0	433.0	454.0	489.0	458.5	483.5	543.0	593.0	636.5	696.5	722.5	752.5

① ISO 4014 ② DIN 5480 ③ DIN 332-D ④ DIN 332 ⑤ Feather key/keyway DIN 6885-1 ⑦ ISO 4762 ⑧ Without locating shoulder +1 mm
1) AD depends on the motor options, for other dimensions see page 8/36. 2) FDAS/FZAS not possible * Spring compression at max. torque

© Siemens AG 2017

FD.Z./FZ.Z.89 gearbox in a housing flange design

FZ030, FAZ030, FAZS030, FAZT030

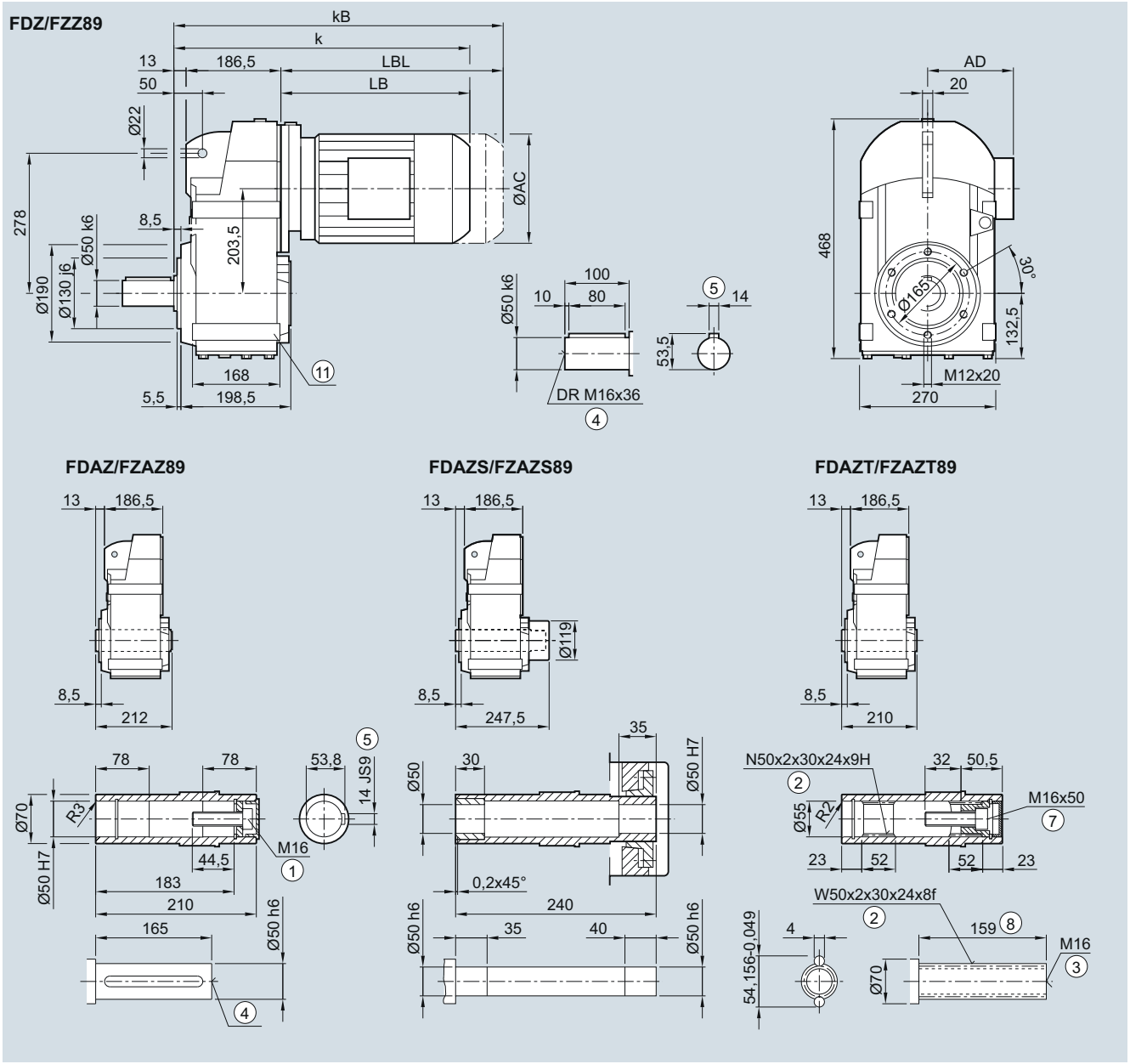

Motor	LE 80	80Z	90	90Z	100	100Z	112	112Z	132	132Z	160	160Z	LES 180[2]	180Z[2]
AC	156.3	156.3	173.8	173.8	198.0	198.0	222.0	222.0	264.0	264.0	318.0	318.0	352.5	352.5
AD[1]	149.2	149.2	154.2	154.2	170.5	170.5	181.5	181.5	207.0	207.0	241.0	241.0	292.0	292.0
k	461.0	496.0	522.5	562.5	575.0	610.0	585.0	610.0	638.0	688.0	720.0	780.0	793.0	823.0
kB	521.0	556.0	592.5	632.5	653.5	688.5	658.0	683.0	742.5	792.5	836.0	896.0	922.0	952.0
LB	261.5	296.5	323.0	363.0	375.5	410.5	385.5	410.5	438.5	488.5	520.5	580.5	593.5	623.5
LBL	321.5	356.5	393.0	433.0	454.0	489.0	458.5	483.5	543.0	593.0	636.5	696.5	722.5	752.5

① ISO 4014 ② DIN 5480 ③ DIN 332-D ④ DIN 332 ⑤ Feather key/keyway DIN 6885-1 ⑦ ISO 4762 ⑧ Without locating shoulder +1 mm
⑪ Use bores only for foot-mounted design

1) AD depends on the motor options, for other dimensions see page 8/36.

2) FDAS/FZAS not possible

© Siemens AG 2017

4

FD.F./FZ.F.89 gearbox in a flange-mounted design

FF030, FAF030, FAFS030, FAFT030

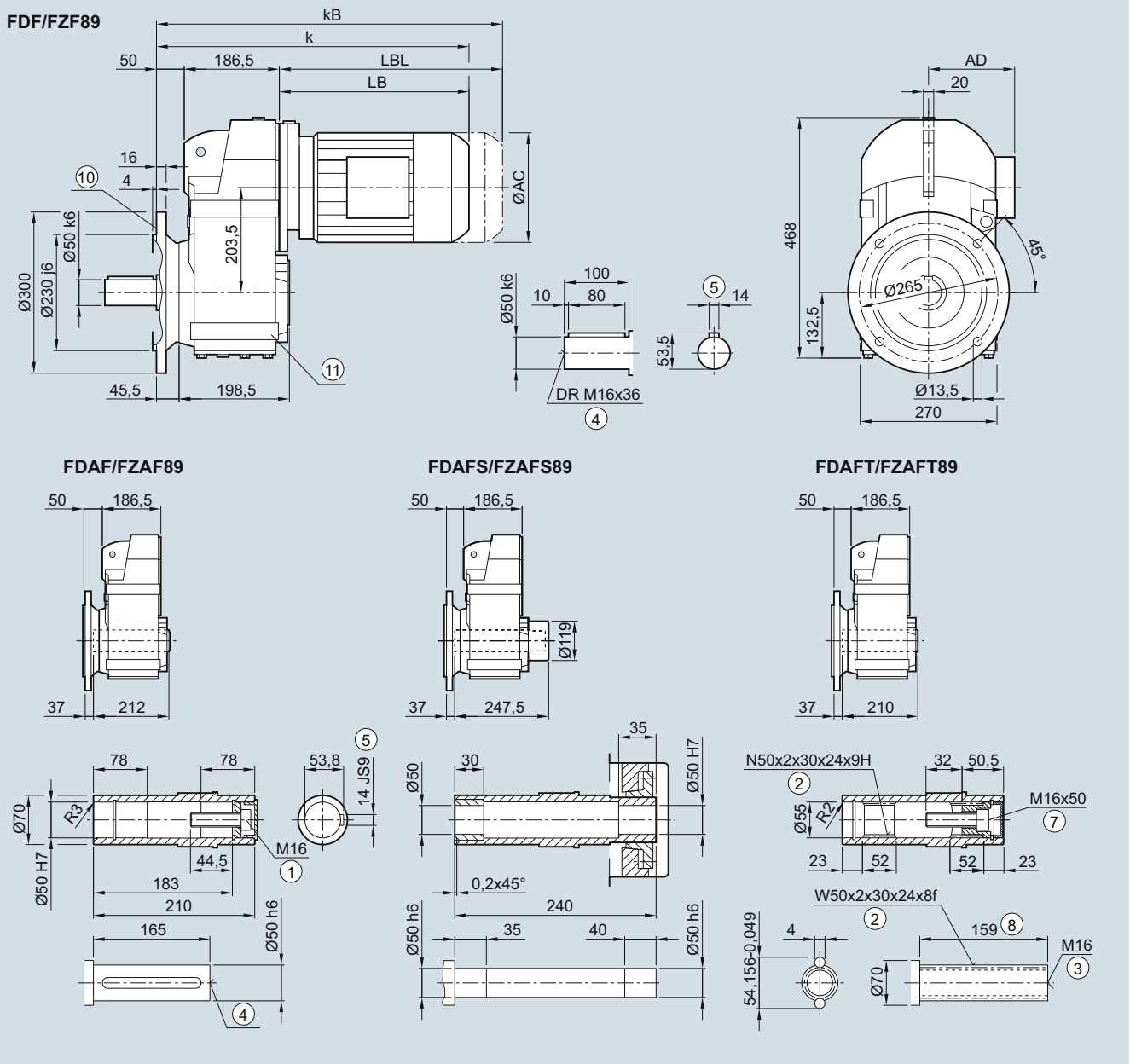

Motor	LE 80	80Z	90	90Z	100	100Z	112	112Z	132	132Z	160	160Z	LES 180[2]	180Z[2]
AC	156.3	156.3	173.8	173.8	198.0	198.0	222.0	222.0	264.0	264.0	318.0	318.0	352.5	352.5
AD[1]	149.2	149.2	154.2	154.2	170.5	170.5	181.5	181.5	207.0	207.0	241.0	241.0	292.0	292.0
k	498.0	533.0	559.5	599.5	612.0	647.0	622.0	647.0	675.0	725.0	757.0	817.0	830.0	860.0
kB	558.0	593.0	629.5	669.5	690.5	725.5	695.0	720.0	779.5	829.5	873.0	933.0	959.0	989.0
LB	261.5	296.5	323.0	363.0	375.5	410.5	385.5	410.5	438.5	488.5	520.5	580.5	593.5	623.5
LBL	321.5	356.5	393.0	433.0	454.0	489.0	458.5	483.5	543.0	593.0	636.5	696.5	722.5	752.5

① ISO 4014 ② DIN 5480 ③ DIN 332-D ④ DIN 332 ⑤ Feather key/keyway DIN 6885-1 ⑦ ISO 4762 ⑧ Without locating shoulder +1 mm
⑩ For inner contour see page 4/123 ⑪ Use bores only for foot-mounted design
[1] AD depends on the motor options, for other dimensions see page 8/36. [2] FADAFS/FZAFS not possible

© Siemens AG 2017

FD../FZ..89 gearbox in a foot-mounted design

F030, FA030, FAS030, FAT030

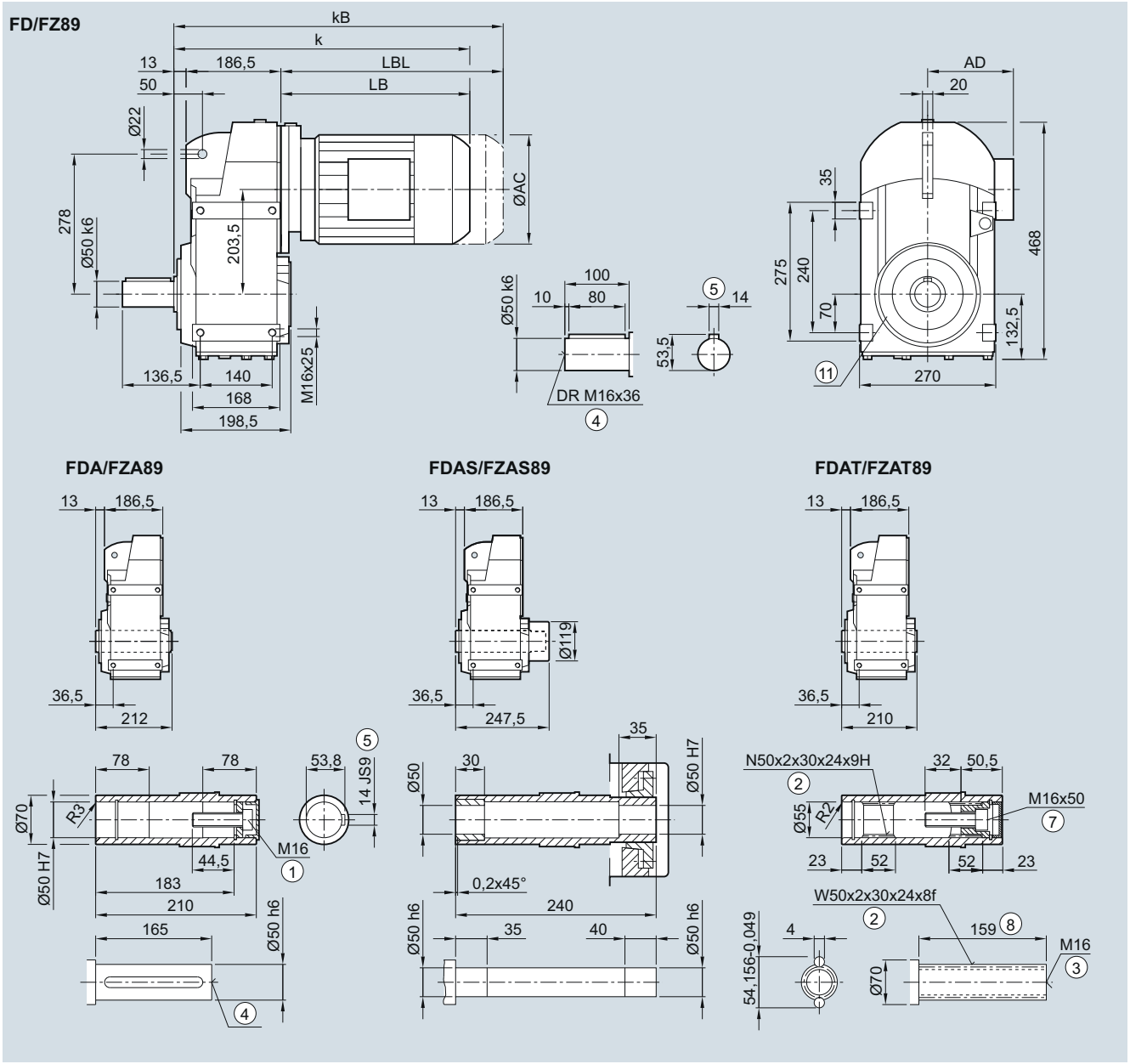

Motor	LE 80	80Z	90	90Z	100	100Z	112	112Z	132	132Z	160	160Z	LES 180[2]	180Z[2]
AC	156.3	156.3	173.8	173.8	198.0	198.0	222.0	222.0	264.0	264.0	318.0	318.0	352.5	352.5
AD[1]	149.2	149.2	154.2	154.2	170.5	170.5	181.5	181.5	207.0	207.0	241.0	241.0	292.0	292.0
k	461.0	496.0	522.5	562.5	575.0	610.0	585.0	610.0	638.0	688.0	720.0	780.0	793.0	823.0
kB	521.0	556.0	592.5	632.5	653.5	688.5	658.0	683.0	742.5	792.5	836.0	896.0	922.0	952.0
LB	261.5	296.5	323.0	363.0	375.5	410.5	385.5	410.5	438.5	488.5	520.5	580.5	593.5	623.5
LBL	321.5	356.5	393.0	433.0	454.0	489.0	458.5	483.5	543.0	593.0	636.5	696.5	722.5	752.5

① ISO 4014 ② DIN 5480 ③ DIN 332-D ④ DIN 332 ⑤ Feather key/keyway DIN 6885-1 ⑦ ISO 4762 ⑧ Without locating shoulder +1 mm
⑪ Use bores only for housing flange design

1) AD depends on the motor options, for other dimensions see page 8/36.

2) FDAS/FZAS not possible

© Siemens AG 2017

FDAD./FZAD.109 gearbox in a shaft-mounted design

FAD030, FADS030, FADT030

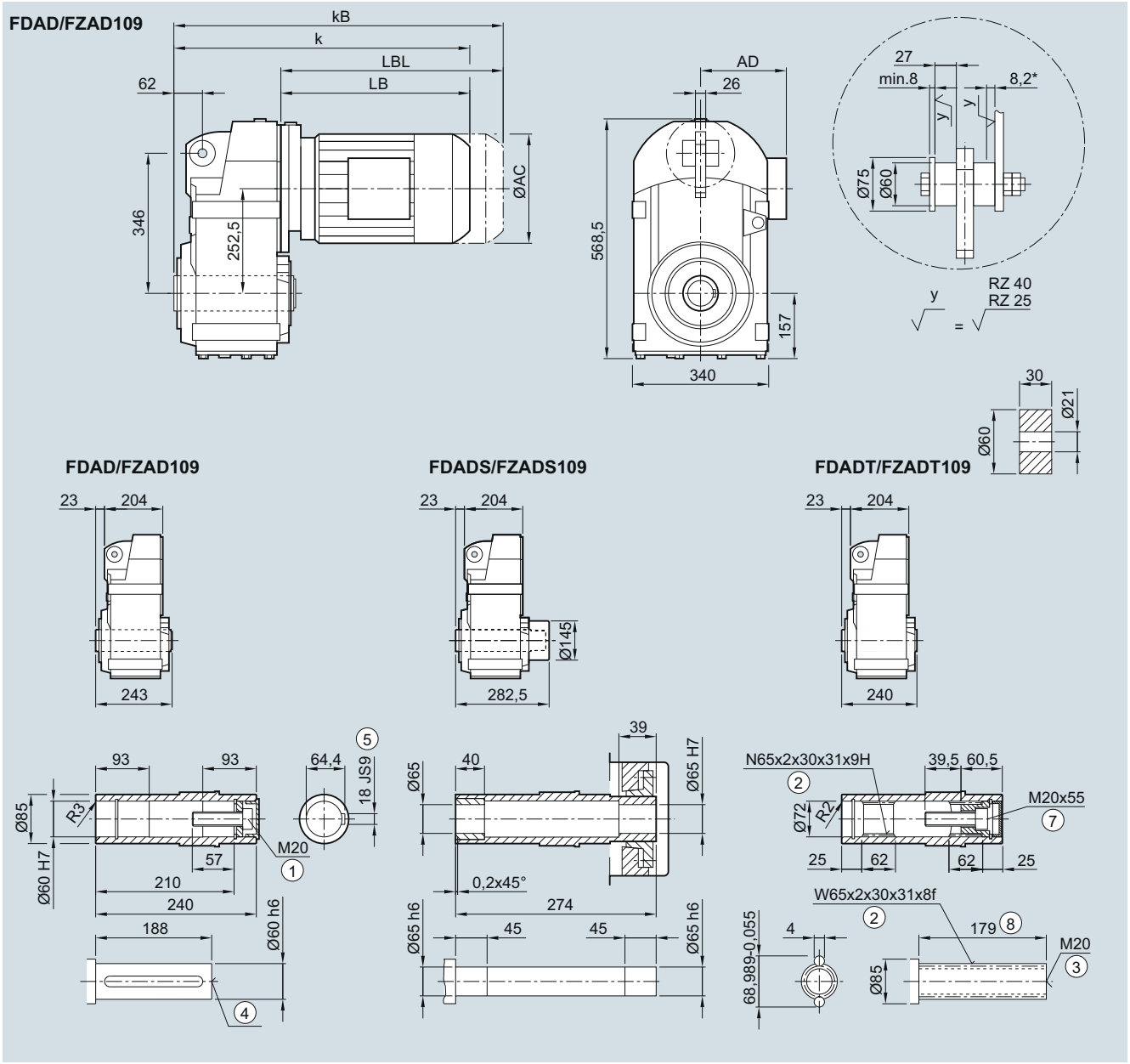

Motor	LE 90	90Z	100	100Z	112	112Z	132	132Z	160	160Z	LES 180	180Z	200	200Z	225[2]	225Y[2]
AC	173.8	173.8	198.0	198.0	222.0	222.0	264.0	264.0	318.0	318.0	352.5	352.5	392.5	392.5	439.0	439.0
AD[1]	154.2	154.2	170.5	170.5	181.5	181.5	207.0	207.0	241.0	241.0	292.0	292.0	315.0	315.0	382.0	382.0
k	543.0	583.0	593.5	628.5	603.5	628.5	656.5	706.5	738.5	798.5	811.5	841.5	879.5	904.5	925.0	985.0
kB	613.0	653.0	672.0	707.0	676.5	701.5	761.0	811.0	854.5	914.5	940.5	970.5	1 026.5	1 051.5	1 153.0	1 213.0
LB	316.0	356.0	366.5	401.5	376.5	401.5	429.5	479.5	511.5	571.5	584.5	614.5	652.5	677.5	698.0	758.0
LBL	386.0	426.0	445.0	480.0	449.5	474.5	534.0	584.0	627.5	687.5	713.5	743.5	799.5	824.5	926.0	986.0

① ISO 4014 ② DIN 5480 ③ DIN 332-D ④ DIN 332 ⑤ Feather key/keyway DIN 6885-1 ⑦ ISO 4762 ⑧ Without locating shoulder +1 mm

1) AD depends on the motor options, for other dimensions see page 8/36.

* Spring compression at max. torque

2) FDAS/FZAS not possible

© Siemens AG 2017

FD.Z./FZ.Z.109 gearbox in a housing flange design

FZ030, FAZ030, FAZS030, FAZT030

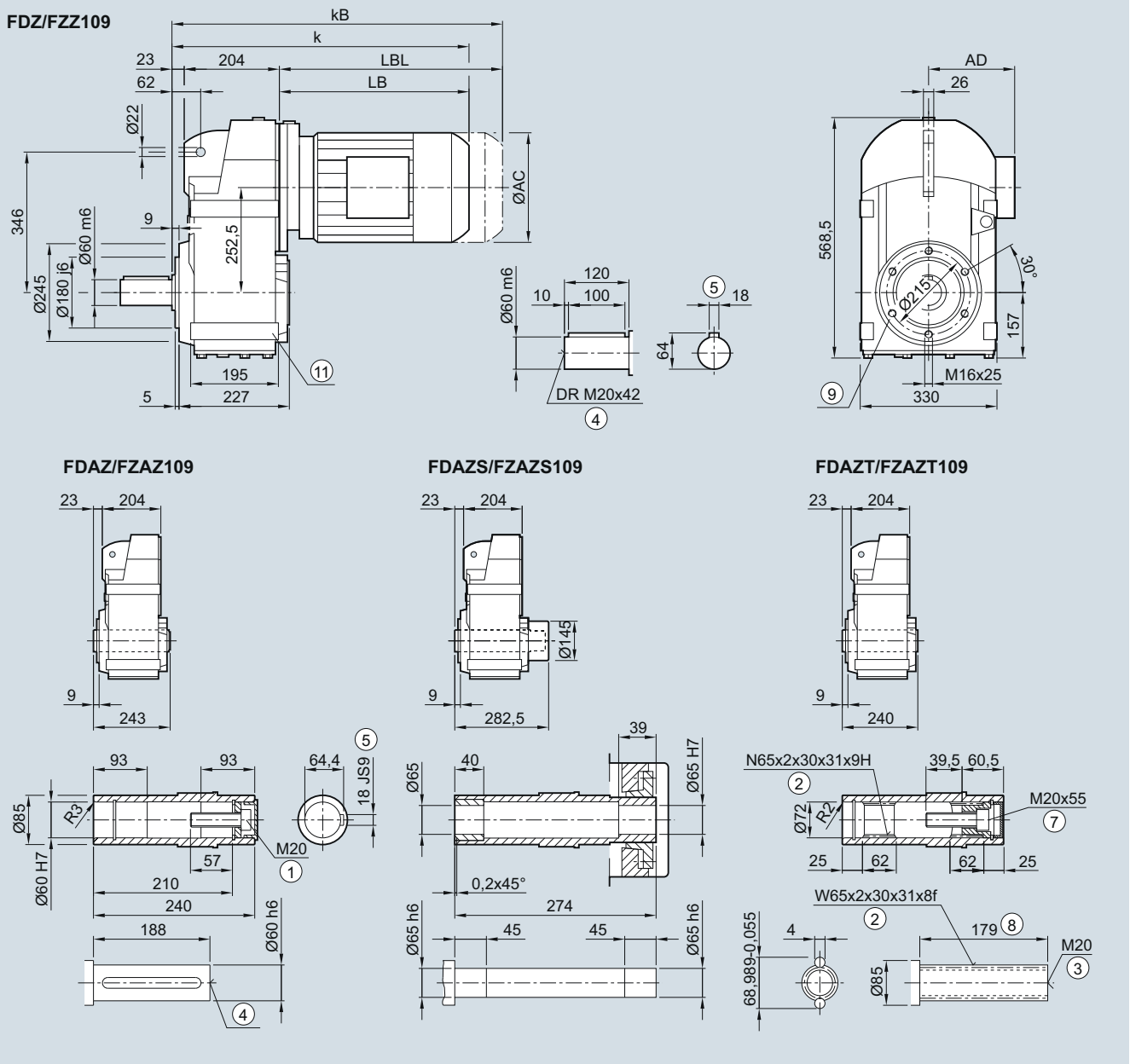

Motor	LE 90	90Z	100	100Z	112	112Z	132	132Z	160	160Z	LES 180	180Z	200	200Z	225[2)]	225Y[2)]
AC	173.8	173.8	198.0	198.0	222.0	222.0	264.0	264.0	318.0	318.0	352.5	352.5	392.5	392.5	439.0	439.0
AD[1)]	154.2	154.2	170.5	170.5	181.5	181.5	207.0	207.0	241.0	241.0	292.0	292.0	315.0	315.0	382.0	382.0
k	543.0	583.0	593.5	628.5	603.5	628.5	656.5	706.5	738.5	798.5	811.5	841.5	879.5	904.5	925.0	985.0
kB	613.0	653.0	672.0	707.0	676.5	701.5	761.0	811.0	854.5	914.5	940.5	970.5	1 026.5	1 051.5	1 153.0	1 213.0
LB	316.0	356.0	366.5	401.5	376.5	401.5	429.5	479.5	511.5	571.5	584.5	614.5	652.5	677.5	698.0	758.0
LBL	386.0	426.0	445.0	480.0	449.5	474.5	534.0	584.0	627.5	687.5	713.5	743.5	799.5	824.5	926.0	986.0

① ISO 4014 ② DIN 5480 ③ DIN 332-D ④ DIN 332 ⑤ Feather key/keyway DIN 6885-1 ⑦ ISO 4762 ⑧ Without locating shoulder +1 mm
⑪ Use bores only for foot-mounted design
⑨ For pin holes see page 4/124 [1)] AD depends on the motor options, for other dimensions see page 8/36. [2)] FDAS/FZAS not possible

© Siemens AG 2017

4

FD.F./FZ.F.109 gearbox in a flange-mounted design

FF030, FAF030, FAFS030, FAFT030

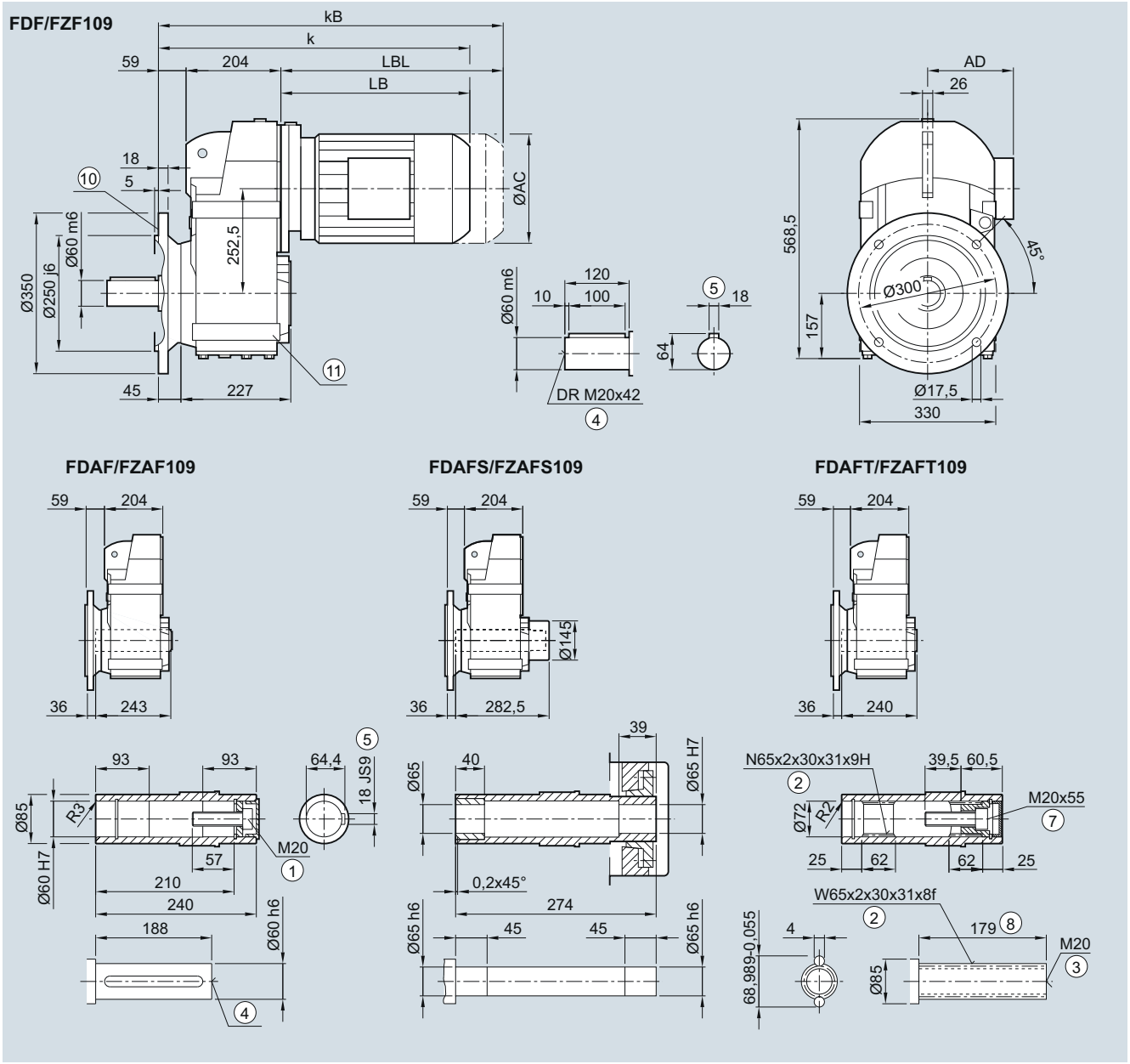

Motor	LE 90	90Z	100	100Z	112	112Z	132	132Z	160	160Z	LES 180	180Z	200	200Z	225[2)]	225Y[2)]
AC	173.8	173.8	198.0	198.0	222.0	222.0	264.0	264.0	318.0	318.0	352.5	352.5	392.5	392.5	439.0	439.0
AD[1)]	154.2	154.2	170.5	170.5	181.5	181.5	207.0	207.0	241.0	241.0	292.0	292.0	315.0	315.0	382.0	382.0
k	579.0	619.0	629.5	664.5	639.5	664.5	692.5	742.5	774.5	834.5	847.5	877.5	915.5	940.5	961.0	1 021.0
kB	649.0	689.0	708.0	743.0	712.5	737.5	797.0	847.0	890.5	950.5	976.5	1 006.5	1 062.5	1 087.5	1 189.0	1 249.0
LB	316.0	356.0	366.5	401.5	376.5	401.5	429.5	479.5	511.5	571.5	584.5	614.5	652.5	677.5	698.0	758.0
LBL	386.0	426.0	445.0	480.0	449.5	474.5	534.0	584.0	627.5	687.5	713.5	743.5	799.5	824.5	926.0	986.0

① ISO 4014 ② DIN 5480 ③ DIN 332-D ④ DIN 332 ⑤ Feather key/keyway DIN 6885-1 ⑦ ISO 4762 ⑧ Without locating shoulder +1 mm
⑩ For inner contour see page 4/123 ⑪ Use bores only for foot-mounted design
1) AD depends on the motor options, for other dimensions see page 8/36.
2) FDAS/FZAS not possible

© Siemens AG 2017

FD../FZ.109 gearbox in a foot-mounted design

F030, FA030, FAS030, FAT030

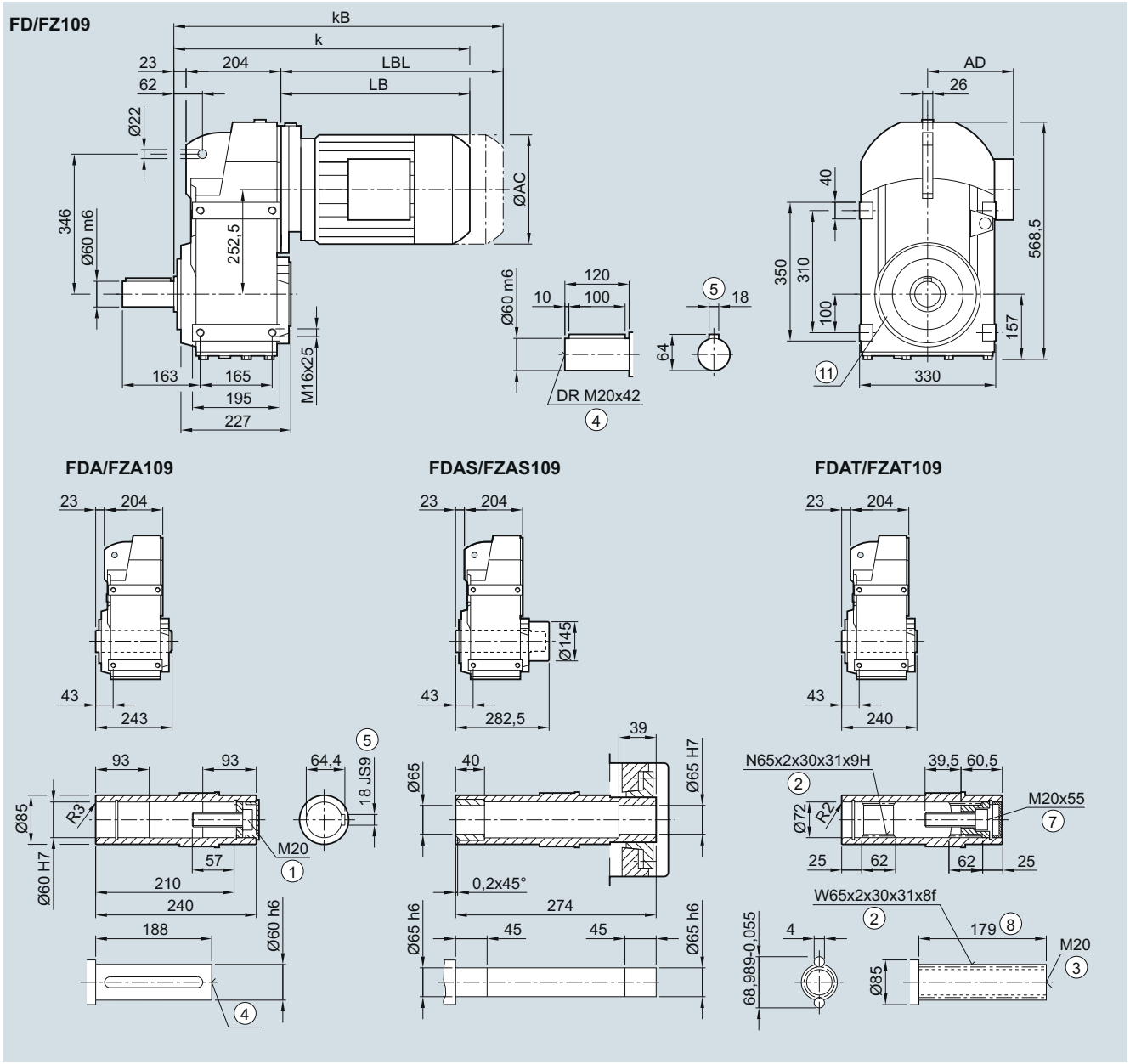

Motor	LE 90	90Z	100	100Z	112	112Z	132	132Z	160	160Z	LES 180	180Z	200	200Z	225[2)]	225Y[2)]
AC	173.8	173.8	198.0	198.0	222.0	222.0	264.0	264.0	318.0	318.0	352.5	352.5	392.5	392.5	439.0	439.0
AD[1)]	154.2	154.2	170.5	170.5	181.5	181.5	207.0	207.0	241.0	241.0	292.0	292.0	315.0	315.0	382.0	382.0
k	543.0	583.0	593.5	628.5	603.5	628.5	656.5	706.5	738.5	798.5	811.5	841.5	879.5	904.5	925.0	985.0
kB	613.0	653.0	672.0	707.0	676.5	701.5	761.0	811.0	854.5	914.5	940.5	970.5	1 026.5	1 051.5	1 153.0	1 213.0
LB	316.0	356.0	366.5	401.5	376.5	401.5	429.5	479.5	511.5	571.5	584.5	614.5	652.5	677.5	698.0	758.0
LBL	386.0	426.0	445.0	480.0	449.5	474.5	534.0	584.0	627.5	687.5	713.5	743.5	799.5	824.5	926.0	986.0

① ISO 4014 ② DIN 5480 ③ DIN 332-D ④ DIN 332 ⑤ Feather key/keyway DIN 6885-1 ⑦ ISO 4762 ⑧ Without locating shoulder +1 mm
⑪ Use bores only for housing flange design

1) AD depends on the motor options, for other dimensions see page 8/36.

2) FDAS/FZAS not possible

© Siemens AG 2017

FDAD./FZAD.129 gearbox in a shaft-mounted design

FAD030, FADS030, FADT030

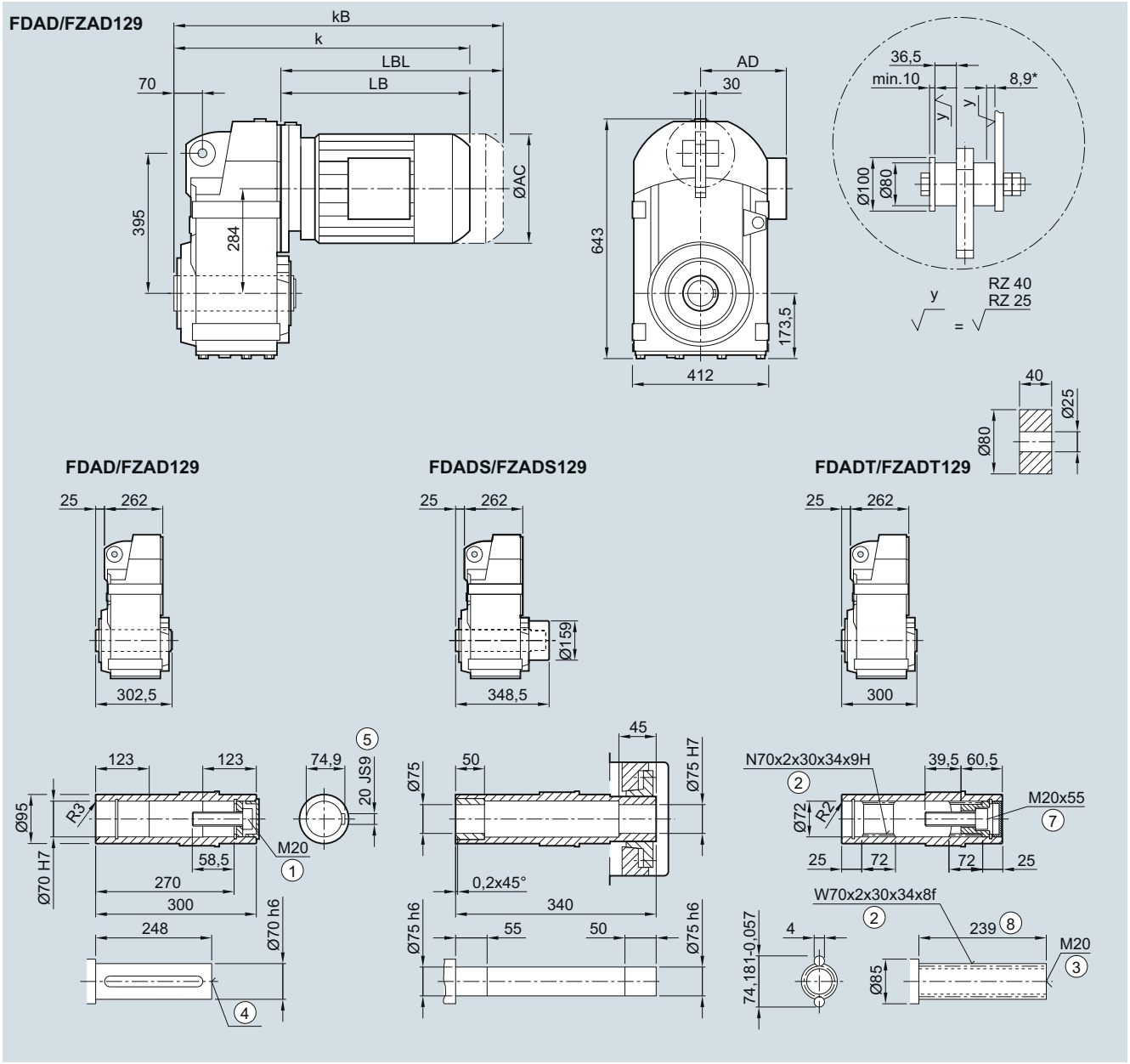

Motor	LE 90	90Z	100	100Z	112	112Z	132	132Z	160	160Z	LES 180	180Z	200	200Z	225	225Y	250[2]
AC	173.8	173.8	198.0	198.0	222.0	222.0	264.0	264.0	318.0	318.0	352.5	352.5	392.5	392.5	439.0	439.0	487.0
AD[1]	154.2	154.2	170.5	170.5	181.5	181.5	207.0	207.0	241.0	241.0	292.0	292.0	315.0	315.0	382.0	382.0	457.5
k	596.0	636.0	644.5	679.5	654.5	679.5	705.5	755.5	787.5	847.5	860.5	890.5	928.5	953.5	980.0	1 040.0	1 085.5
kB	666.0	706.0	723.0	758.0	727.5	752.5	810.0	860.0	903.5	963.5	989.5	1 019.5	1 075.5	1 100.5	1 208.0	1 268.0	1 310.5
LB	309.0	349.0	357.5	392.5	367.5	392.5	418.5	468.5	500.5	560.5	573.5	603.5	641.5	666.5	693.0	753.0	798.5
LBL	379.0	419.0	436.0	471.0	440.5	465.5	523.0	573.0	616.5	676.5	702.5	732.5	788.5	813.5	921.0	981.0	1 023.5

① ISO 4014 ② DIN 5480 ③ DIN 332-D ④ DIN 332 ⑤ Feather key/keyway DIN 6885-1 ⑦ ISO 4762 ⑧ Without locating shoulder +1 mm

1) AD depends on the motor options, for other dimensions see page 8/36.

* Spring compression at max. torque

2) FDAS/FZAS not possible

© Siemens AG 2017

FD.Z./FZ.Z.129 gearbox in a housing flange design

FZ030, FAZ030, FAZS030, FAZT030

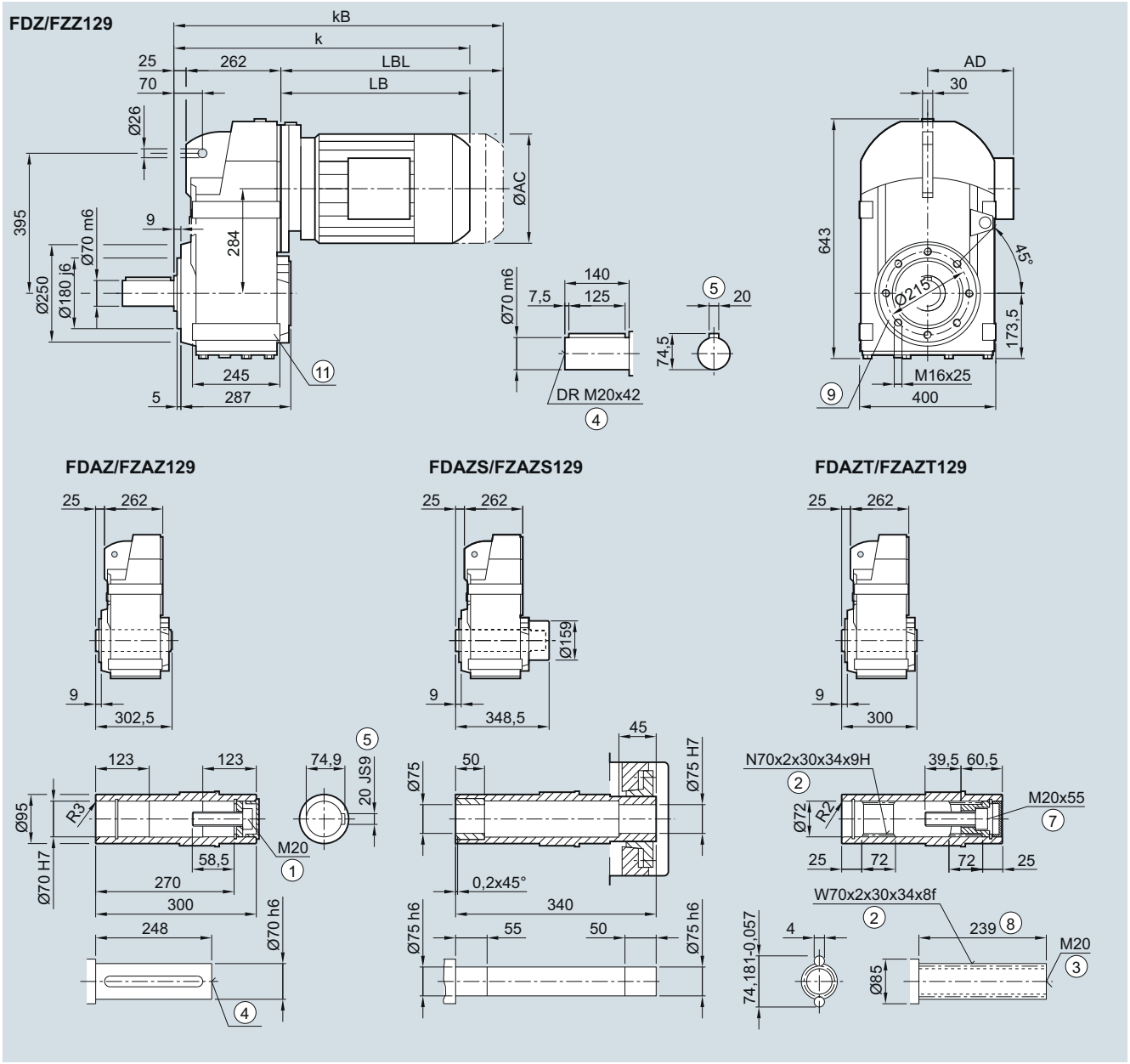

Motor	LE 90	90Z	100	100Z	112	112Z	132	132Z	160	160Z	LES 180	180Z	200	200Z	225	225Y	250[2]
AC	173.8	173.8	198.0	198.0	222.0	222.0	264.0	264.0	318.0	318.0	352.5	352.5	392.5	392.5	439.0	439.0	487.0
AD[1]	154.2	154.2	170.5	170.5	181.5	181.5	207.0	207.0	241.0	241.0	292.0	292.0	315.0	315.0	382.0	382.0	457.5
k	596.0	636.0	644.5	679.5	654.5	679.5	705.5	755.5	787.5	847.5	860.5	890.5	928.5	953.5	980.0	1 040.0	1 085.5
kB	666.0	706.0	723.0	758.0	727.5	752.5	810.0	860.0	903.5	963.5	989.5	1 019.5	1 075.5	1 100.5	1 208.0	1 268.0	1 310.5
LB	309.0	349.0	357.5	392.5	367.5	392.5	418.5	468.5	500.5	560.5	573.5	603.5	641.5	666.5	693.0	753.0	798.5
LBL	379.0	419.0	436.0	471.0	440.5	465.5	523.0	573.0	616.5	676.5	702.5	732.5	788.5	813.5	921.0	981.0	1 023.5

① ISO 4014 ② DIN 5480 ③ DIN 332-D ④ DIN 332 ⑤ Feather key/keyway DIN 6885-1 ⑦ ISO 4762 ⑧ Without locating shoulder +1 mm
⑨ For pin holes see page 4/124 ⑪ Use bores only for foot-mounted design

1) AD depends on the motor options, for other dimensions see page 8/36.

2) FDAS/FZAS not possible

© Siemens AG 2017

4

FD.F./FZ.F.129 gearbox in a flange-mounted design

FF030, FAF030, FAFS030, FAFT030

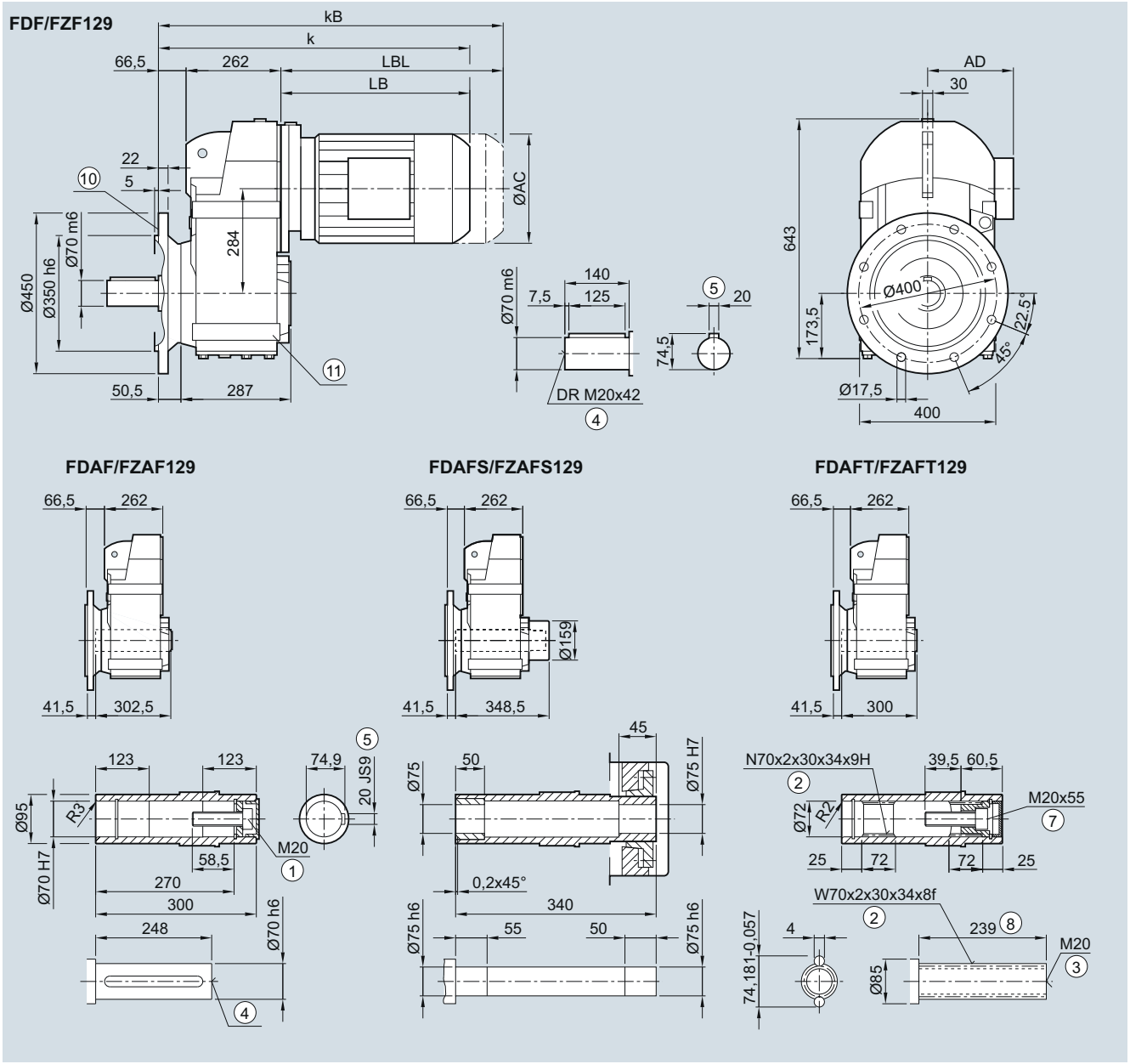

Motor	LE 90	90Z	100	100Z	112	112Z	132	132Z	160	160Z	LES 180	180Z	200	200Z	225	225Y	250[2]
AC	173.8	173.8	198.0	198.0	222.0	222.0	264.0	264.0	318.0	318.0	352.5	352.5	392.5	392.5	439.0	439.0	487.0
AD[1]	154.2	154.2	170.5	170.5	181.5	181.5	207.0	207.0	241.0	241.0	292.0	292.0	315.0	315.0	382.0	382.0	457.5
k	637.5	677.5	686.0	721.0	696.0	721.0	747.0	797.0	829.0	889.0	902.0	932.0	970.0	995.0	1 021.5	1 081.5	1 127.0
kB	707.5	747.5	764.5	799.5	769.0	794.0	851.5	901.5	945.0	1 005.0	1 031.0	1 061.0	1 117.0	1 142.0	1 249.5	1 309.5	1 352.0
LB	309.0	349.0	357.5	392.5	367.5	392.5	418.5	468.5	500.5	560.5	573.5	603.5	641.5	666.5	693.0	753.0	798.5
LBL	379.0	419.0	436.0	471.0	440.5	465.5	523.0	573.0	616.5	676.5	702.5	732.5	788.5	813.5	921.0	981.0	1 023.5

① ISO 4014 ② DIN 5480 ③ DIN 332-D ④ DIN 332 ⑤ Feather key/keyway DIN 6885-1 ⑦ ISO 4762 ⑧ Without locating shoulder +1 mm
⑩ For inner contour see page 4/123 ⑪ Use bores only for foot-mounted design
1) AD depends on the motor options, for other dimensions see page 8/36.
2) FDAS/FZAS not possible

© Siemens AG 2017

FD../FZ..129 gearbox in a foot-mounted design

F030, FA030, FAS030, FAT030

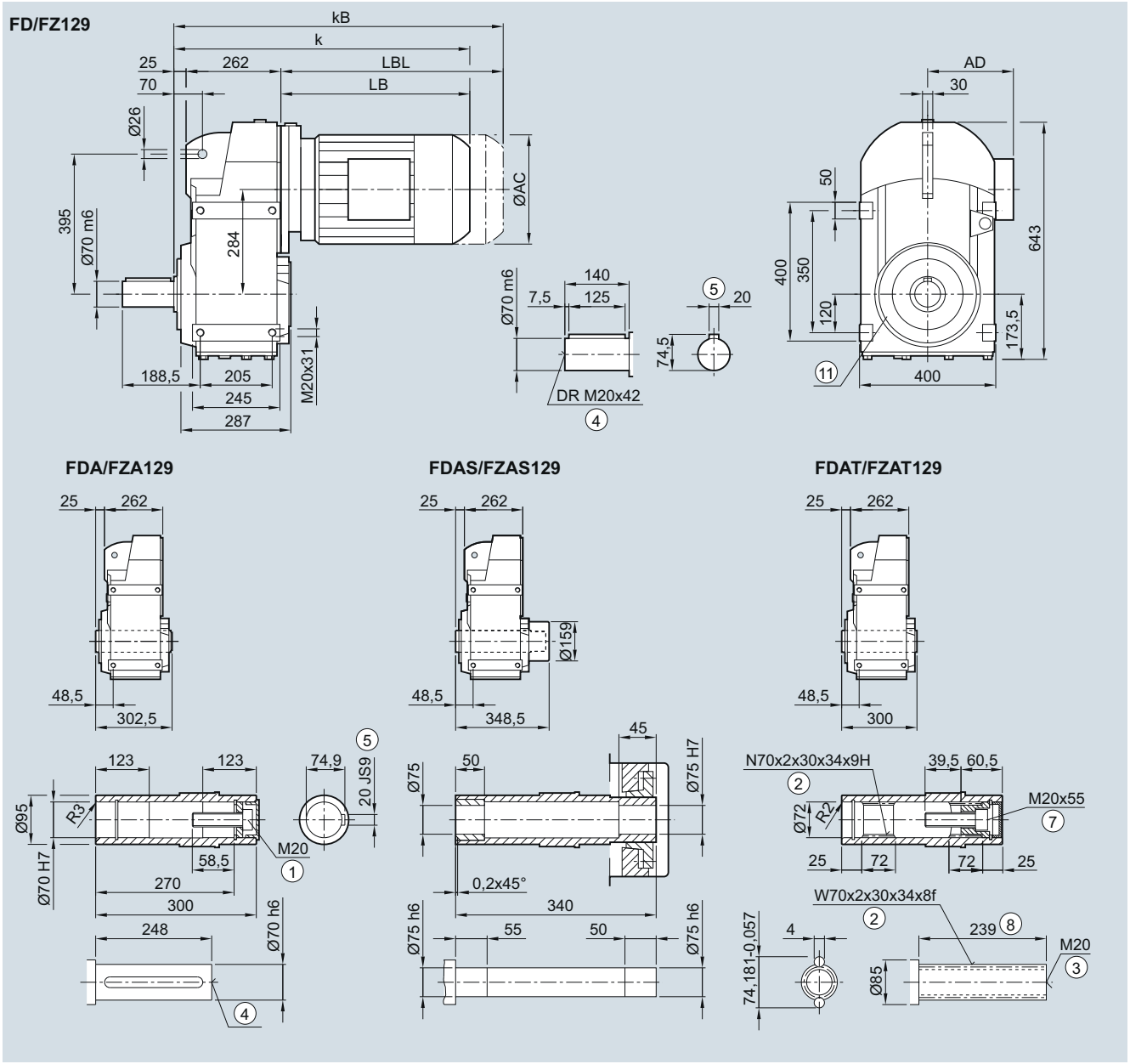

Motor	LE 90	90Z	100	100Z	112	112Z	132	132Z	160	160Z	LES 180	180Z	200	200Z	225	225Y	250[2]
AC	173.8	173.8	198.0	198.0	222.0	222.0	264.0	264.0	318.0	318.0	352.5	352.5	392.5	392.5	439.0	439.0	487.0
AD[1]	154.2	154.2	170.5	170.5	181.5	181.5	207.0	207.0	241.0	241.0	292.0	292.0	315.0	315.0	382.0	382.0	457.5
k	596.0	636.0	644.5	679.5	654.5	679.5	705.5	755.5	787.5	847.5	860.5	890.5	928.5	953.5	980.0	1 040.0	1 085.5
kB	666.0	706.0	723.0	758.0	727.5	752.5	810.0	860.0	903.5	963.5	989.5	1 019.5	1 075.5	1 100.5	1 208.0	1 268.0	1 310.5
LB	309.0	349.0	357.5	392.5	367.5	392.5	418.5	468.5	500.5	560.5	573.5	603.5	641.5	666.5	693.0	753.0	798.5
LBL	379.0	419.0	436.0	471.0	440.5	465.5	523.0	573.0	616.5	676.5	702.5	732.5	788.5	813.5	921.0	981.0	1 023.5

① ISO 4014 ② DIN 5480 ③ DIN 332-D ④ DIN 332 ⑤ Feather key/keyway DIN 6885-1 ⑦ ISO 4762 ⑧ Without locating shoulder +1 mm
⑪ Use bores only for housing flange design

[1] AD depends on the motor options, for other dimensions see page 8/36.

[2] FDAS/FZAS not possible

© Siemens AG 2017

4

FDAD./FZAD.149 gearbox in a shaft-mounted design

FAD030, FADS030, FADT030

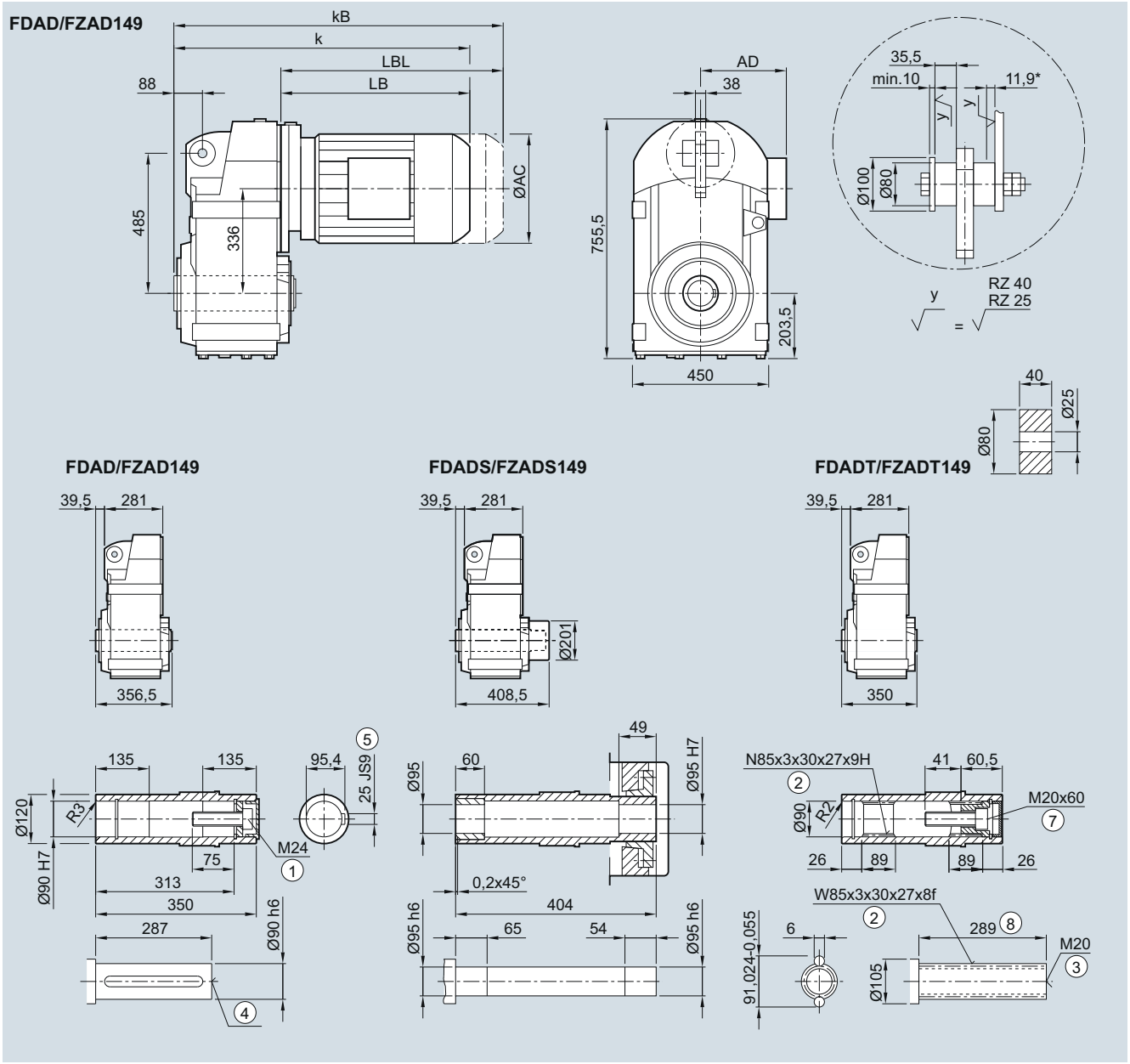

Motor	LE								LES						
	100	100Z	112	112Z	132	132Z	160	160Z	180	180Z	200	200Z	225	225Y	250
AC	198.0	198.0	222.0	222.0	264.0	264.0	318.0	318.0	352.5	352.5	392.5	392.5	439.0	439.0	487.0
AD[1)]	170.5	170.5	181.5	181.5	207.0	207.0	241.0	241.0	292.0	292.0	315.0	315.0	382.0	382.0	457.5
k	676.5	711.5	686.5	711.5	732.5	782.5	814.5	874.5	887.5	917.5	955.5	980.5	1 000.5	1 060.5	1 112.0
kB	755.0	790.0	759.5	784.5	837.0	887.0	930.5	990.5	1 016.5	1 046.5	1 102.5	1 127.5	1 229.0	1 289.0	1 337.0
LB	356.0	391.0	366.0	391.0	412.0	462.0	494.0	554.0	567.0	597.0	635.0	660.0	680.5	740.5	792.0
LBL	434.5	469.5	439.0	464.0	516.5	566.5	610.0	670.0	696.0	726.0	782.0	807.0	908.5	968.5	1 017.0

① ISO 4014 ② DIN 5480 ③ DIN 332-D ④ DIN 332 ⑤ Feather key/keyway DIN 6885-1 ⑦ ISO 4762 ⑧ Without locating shoulder +1 mm

1) AD depends on the motor options, for other dimensions see page 8/36. * Spring compression at max. torque

© Siemens AG 2017

FD.Z./FZ.Z.149 gearbox in a housing flange design

FZ030, FAZ030, FAZS030, FAZT030

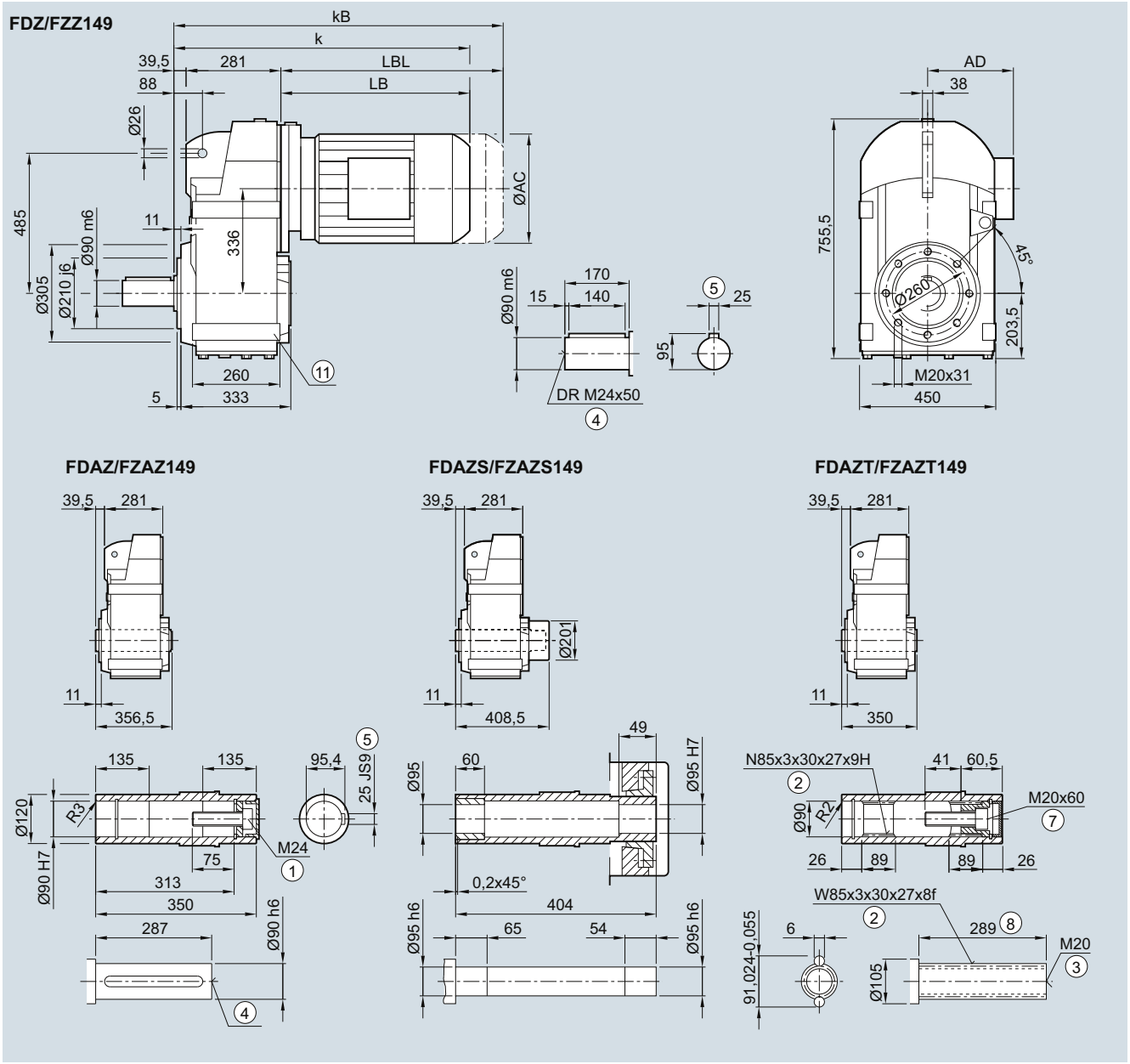

Motor	LE								LES						
	100	100Z	112	112Z	132	132Z	160	160Z	180	180Z	200	200Z	225	225Y	250
AC	198.0	198.0	222.0	222.0	264.0	264.0	318.0	318.0	352.5	352.5	392.5	392.5	439.0	439.0	487.0
AD[1)]	170.5	170.5	181.5	181.5	207.0	207.0	241.0	241.0	292.0	292.0	315.0	315.0	382.0	382.0	457.5
k	676.5	711.5	686.5	711.5	732.5	782.5	814.5	874.5	887.5	917.5	955.5	980.5	1 000.5	1 060.5	1 112.0
kB	755.0	790.0	759.5	784.5	837.0	887.0	930.5	990.5	1 016.5	1 046.5	1 102.5	1 127.5	1 229.0	1 289.0	1 337.0
LB	356.0	391.0	366.0	391.0	412.0	462.0	494.0	554.0	567.0	597.0	635.0	660.0	680.5	740.5	792.0
LBL	434.5	469.5	439.0	464.0	516.5	566.5	610.0	670.0	696.0	726.0	782.0	807.0	908.5	968.5	1 017.0

① ISO 4014 ② DIN 5480 ③ DIN 332-D ④ DIN 332 ⑤ Feather key/keyway DIN 6885-1 ⑦ ISO 4762 ⑧ Without locating shoulder +1 mm
⑪ Use bores only for foot-mounted design

1) AD depends on the motor options, for other dimensions see page 8/36.

© Siemens AG 2017

FD.F./FZ.F.149 gearbox in a flange-mounted design

FF030, FAF030, FAFS030, FAFT030

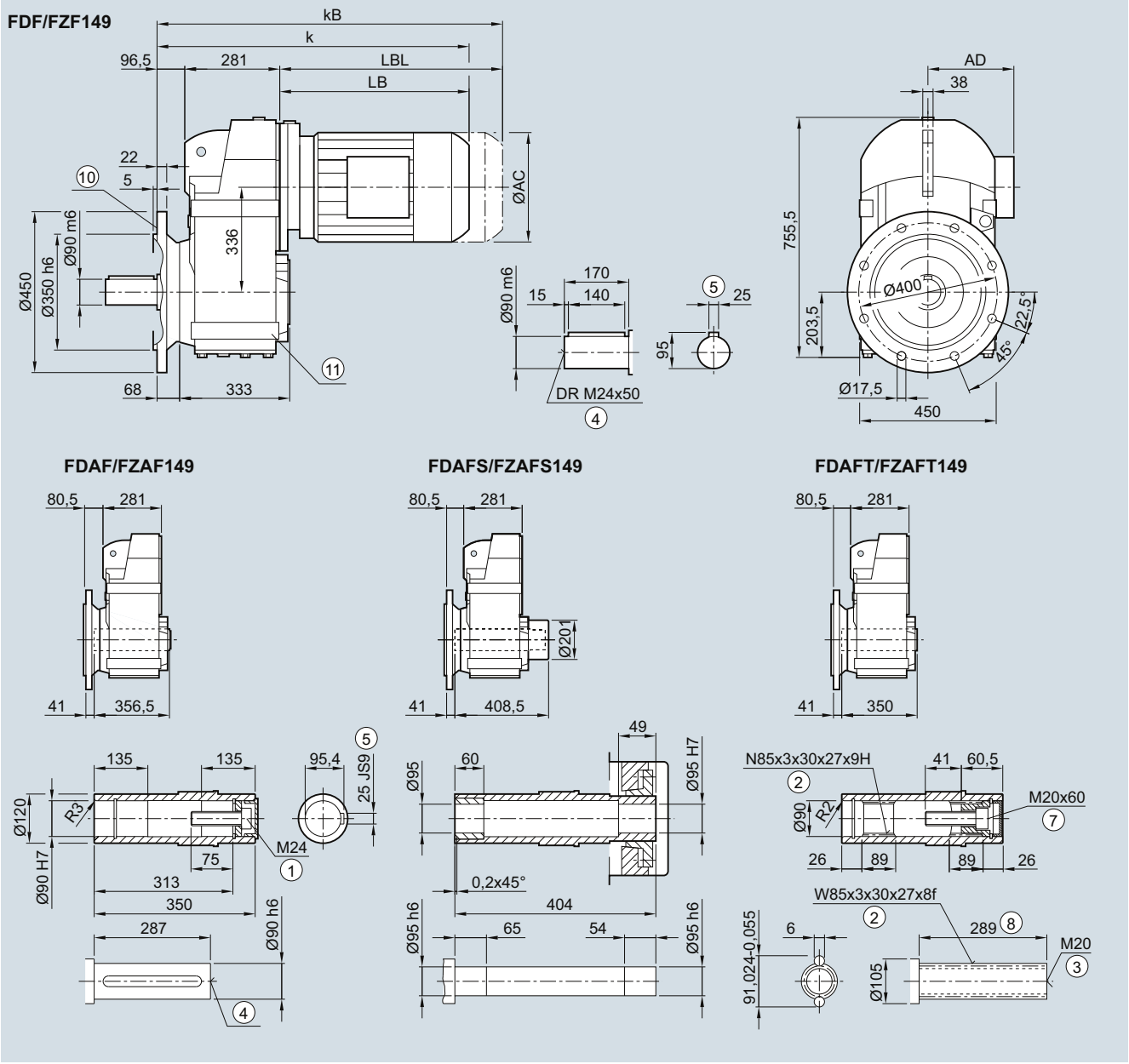

Motor	LE 100	100Z	112	112Z	132	132Z	160	160Z	LES 180	180Z	200	200Z	225	225Y	250
AC	198.0	198.0	222.0	222.0	264.0	264.0	318.0	318.0	352.5	352.5	392.5	392.5	439.0	439.0	487.0
AD[1)]	170.5	170.5	181.5	181.5	207.0	207.0	241.0	241.0	292.0	292.0	315.0	315.0	382.0	382.0	457.5
k	734.0	769.0	744.0	769.0	790.0	840.0	872.0	932.0	945.0	975.0	1 013.0	1 038.0	1 058.5	1 118.5	1 170.0
kB	812.5	847.5	817.0	842.0	894.5	944.5	988.0	1 048.0	1 074.0	1 104.0	1 160.0	1 185.0	1 286.5	1 346.5	1 395.0
LB	356.0	391.0	366.0	391.0	412.0	462.0	494.0	554.0	567.0	597.0	635.0	660.0	680.5	740.5	792.0
LBL	434.5	469.5	439.0	464.0	516.5	566.5	610.0	670.0	696.0	726.0	782.0	807.0	908.5	968.5	1 017.0

① ISO 4014 ② DIN 5480 ③ DIN 332-D ④ DIN 332 ⑤ Feather key/keyway DIN 6885-1 ⑦ ISO 4762 ⑧ Without locating shoulder +1 mm
⑩ For inner contour see page 4/123 ⑪ Use bores only for foot-mounted design
1) AD depends on the motor options, for other dimensions see page 8/36.

© Siemens AG 2017

FD../FZ..149 gearbox in a foot-mounted design

F030, FA030, FAS030, FAT030

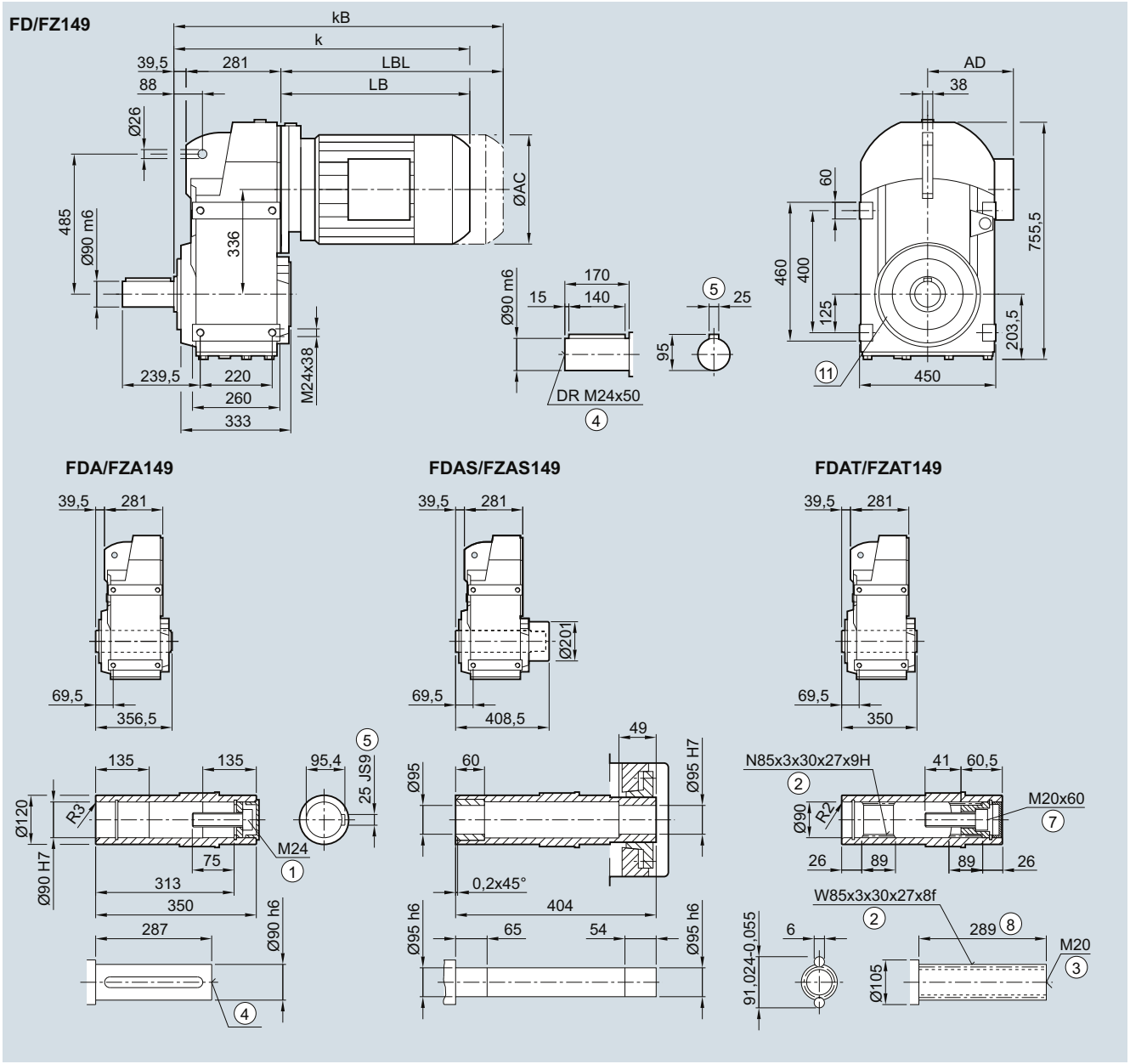

Motor	LE								LES						
	100	100Z	112	112Z	132	132Z	160	160Z	180	180Z	200	200Z	225	225Y	250
AC	198.0	198.0	222.0	222.0	264.0	264.0	318.0	318.0	352.5	352.5	392.5	392.5	439.0	439.0	487.0
AD[1)]	170.5	170.5	181.5	181.5	207.0	207.0	241.0	241.0	292.0	292.0	315.0	315.0	382.0	382.0	457.5
k	676.5	711.5	686.5	711.5	732.5	782.5	814.5	874.5	887.5	917.5	955.5	980.5	1 000.5	1 060.5	1 112.0
kB	755.0	790.0	759.5	784.5	837.0	887.0	930.5	990.5	1 016.5	1 046.5	1 102.5	1 127.5	1 229.0	1 289.0	1 337.0
LB	356.0	391.0	366.0	391.0	412.0	462.0	494.0	554.0	567.0	597.0	635.0	660.0	680.5	740.5	792.0
LBL	434.5	469.5	439.0	464.0	516.5	566.5	610.0	670.0	696.0	726.0	782.0	807.0	908.5	968.5	1 017.0

① ISO 4014 ② DIN 5480 ③ DIN 332-D ④ DIN 332 ⑤ Feather key/keyway DIN 6885-1 ⑦ ISO 4762 ⑧ Without locating shoulder +1 mm
⑪ Use bores only for housing flange design

1) AD depends on the motor options, for other dimensions see page 8/36.

© Siemens AG 2017

4

FDAD./FZAD.169 gearbox in a shaft-mounted design

FAD030, FADS030, FADT030

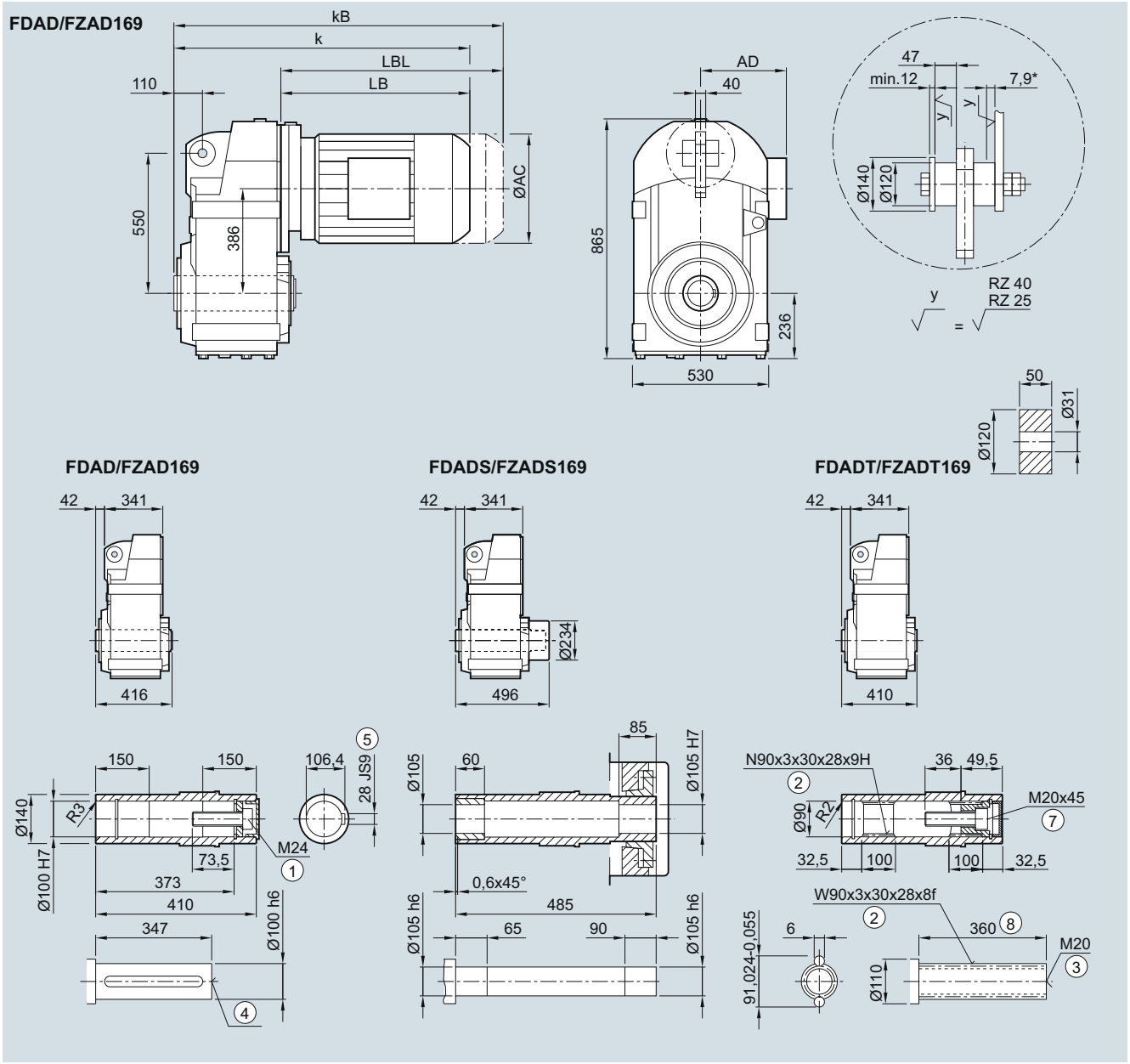

Motor	LE						LES						
	112	112Z	132	132Z	160	160Z	180	180Z	200	200Z	225	225Y	250
AC	222.0	222.0	264.0	264.0	318.0	318.0	352.5	352.5	392.5	392.5	439.0	439.0	487.0
AD[1)]	181.5	181.5	207.0	207.0	241.0	241.0	292.0	292.0	315.0	315.0	382.0	382.0	457.0
k	739.5	764.5	785.0	835.0	867.0	927.0	939.5	969.5	1 007.5	1 032.5	1 052.5	1 112.0	1 159.5
kB	812.5	837.5	889.5	939.5	983.0	1 043.0	1 068.5	1 098.5	1 154.5	1 179.5	1 280.0	1 340.0	1 384.5
LB	353.5	378.5	399.0	449.0	481.0	541.0	553.5	583.0	621.5	646.5	666.0	726.0	773.5
LBL	426.5	451.5	503.5	553.5	597.0	657.0	682.5	712.5	768.5	793.5	894.0	954.0	998.5

① ISO 4014 ② DIN 5480 ③ DIN 332-D ④ DIN 332 ⑤ Feather key/keyway DIN 6885-1 ⑦ ISO 4762 ⑧ Without locating shoulder +1 mm
1) AD depends on the motor options, for other dimensions see page 8/36. * Spring compression at max. torque

© Siemens AG 2017

FD.Z./FZ.Z.169 gearbox in a housing flange design

FZ030, FAZ030, FAZS030, FAZT030

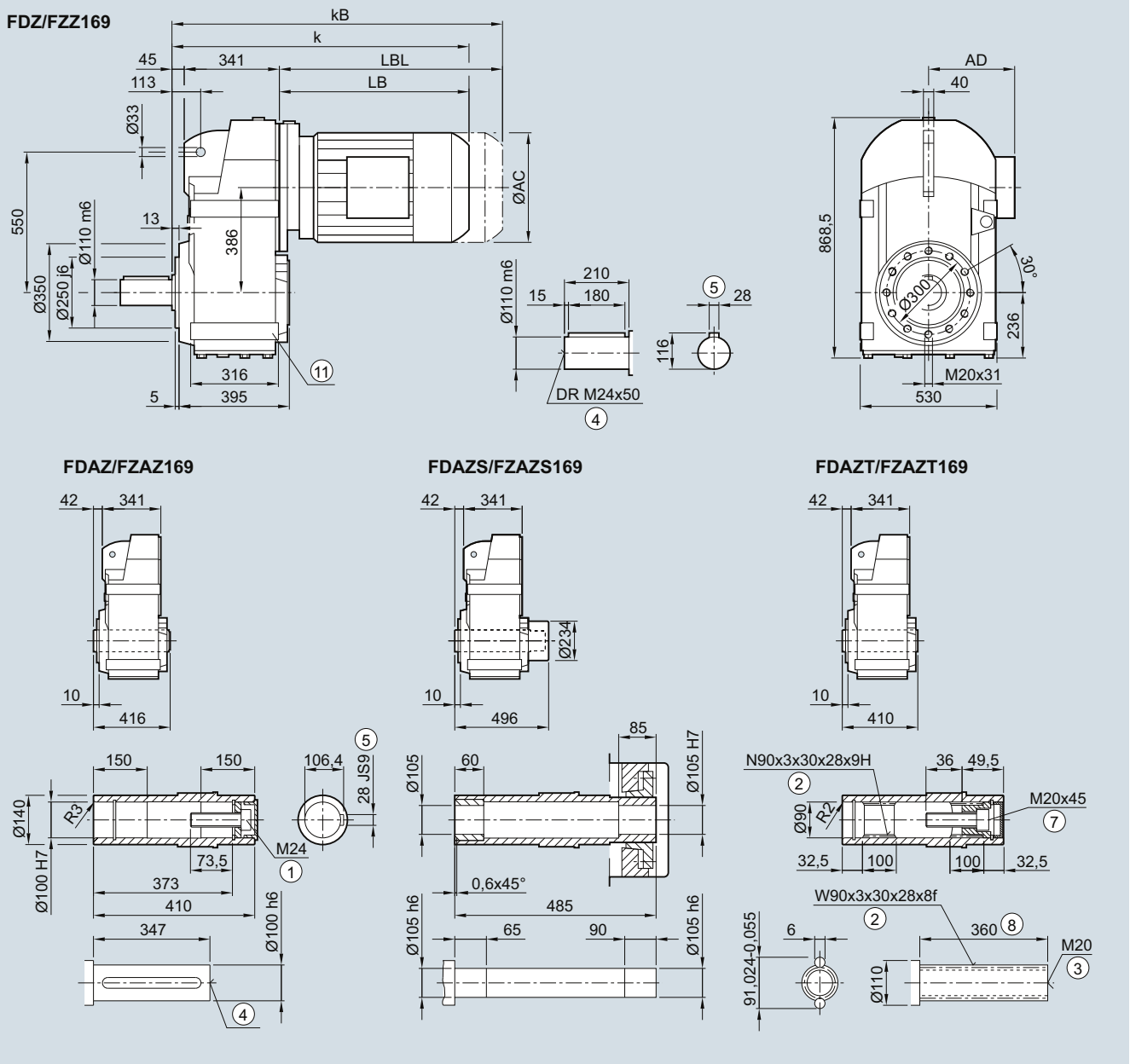

Motor	LE						LES						
	112	112Z	132	132Z	160	160Z	180	180Z	200	200Z	225	225Y	250
AC	222.0	222.0	264.0	264.0	318.0	318.0	352.5	352.5	392.5	392.5	439.0	439.0	487.0
AD[1)]	181.5	181.5	207.0	207.0	241.0	241.0	292.0	292.0	315.0	315.0	382.0	382.0	457.0
k	739.5	764.5	785.0	835.0	867.0	927.0	939.5	969.5	1 007.5	1 032.5	1 052.5	1 112.0	1 159.5
kB	812.5	837.5	889.5	939.5	983.0	1 043.0	1 068.5	1 098.5	1 154.5	1 179.5	1 280.0	1 340.0	1 384.5
LB	353.5	378.5	399.0	449.0	481.0	541.0	553.5	583.0	621.5	646.5	666.0	726.0	773.5
LBL	426.5	451.5	503.5	553.5	597.0	657.0	682.5	712.5	768.5	793.5	894.0	954.0	998.5

① ISO 4014 ② DIN 5480 ③ DIN 332-D ④ DIN 332 ⑤ Feather key/keyway DIN 6885-1 ⑦ ISO 4762 ⑧ Without locating shoulder +1 mm
⑪ Use bores only for foot-mounted design

1) AD depends on the motor options, for other dimensions see page 8/36.

© Siemens AG 2017

FD.F./FZ.F.169 gearbox in a flange-mounted design

FF030, FAF030, FAFS030, FAFT030

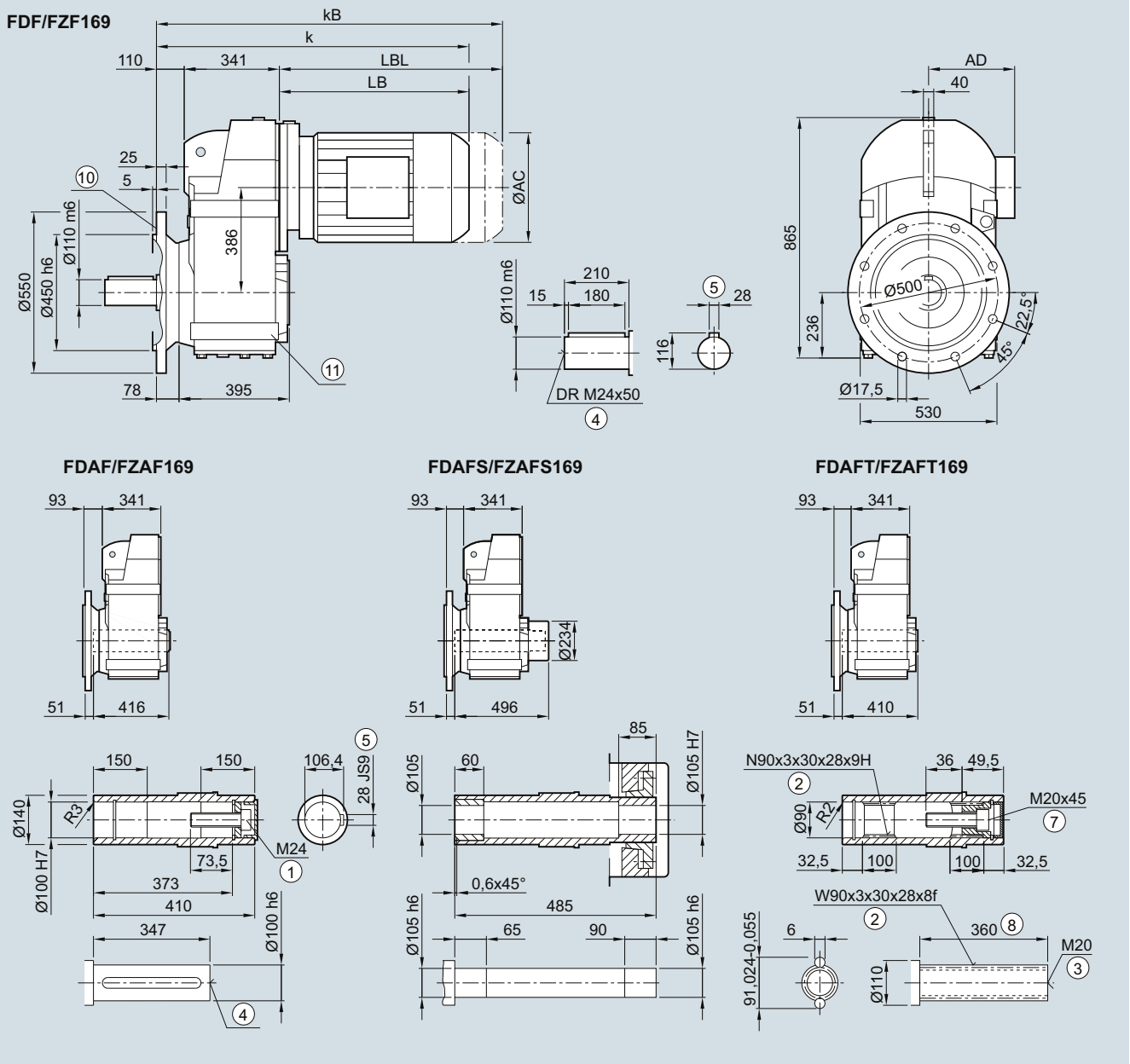

Motor	LE 112	112Z	132	132Z	160	160Z	LES 180	180Z	200	200Z	225	225Y	250
AC	222.0	222.0	264.0	264.0	318.0	318.0	352.5	352.5	392.5	392.5	439.0	439.0	487.0
AD[1)]	181.5	181.5	207.0	207.0	241.0	241.0	292.0	292.0	315.0	315.0	382.0	382.0	457.5
k	804.5	829.5	850.0	900.0	932.0	992.0	1 004.5	1 034.5	1 072.5	1 097.5	1 117.0	1 177.0	1 224.5
kB	877.5	902.5	954.5	1 004.5	1 048.0	1 108.0	1 133.5	1 163.5	1 219.5	1 244.5	1 345.0	1 405.0	1 449.5
LB	353.5	378.5	399.0	449.0	481.0	541.0	553.5	583.5	621.5	646.5	666.0	726.0	773.5
LBL	426.5	451.5	503.5	553.5	597.0	657.0	682.5	712.5	768.5	793.5	894.0	954.0	998.5

① ISO 4014 ② DIN 5480 ③ DIN 332-D ④ DIN 332 ⑤ Feather key/keyway DIN 6885-1 ⑦ ISO 4762 ⑧ Without locating shoulder +1 mm
⑩ For inner contour see page 4/123 ⑪ Use bores only for foot-mounted design
1) AD depends on the motor options, for other dimensions see page 8/36.

© Siemens AG 2017

FD../FZ..169 gearbox in a foot-mounted design

F030, FA030, FAS030, FAT030

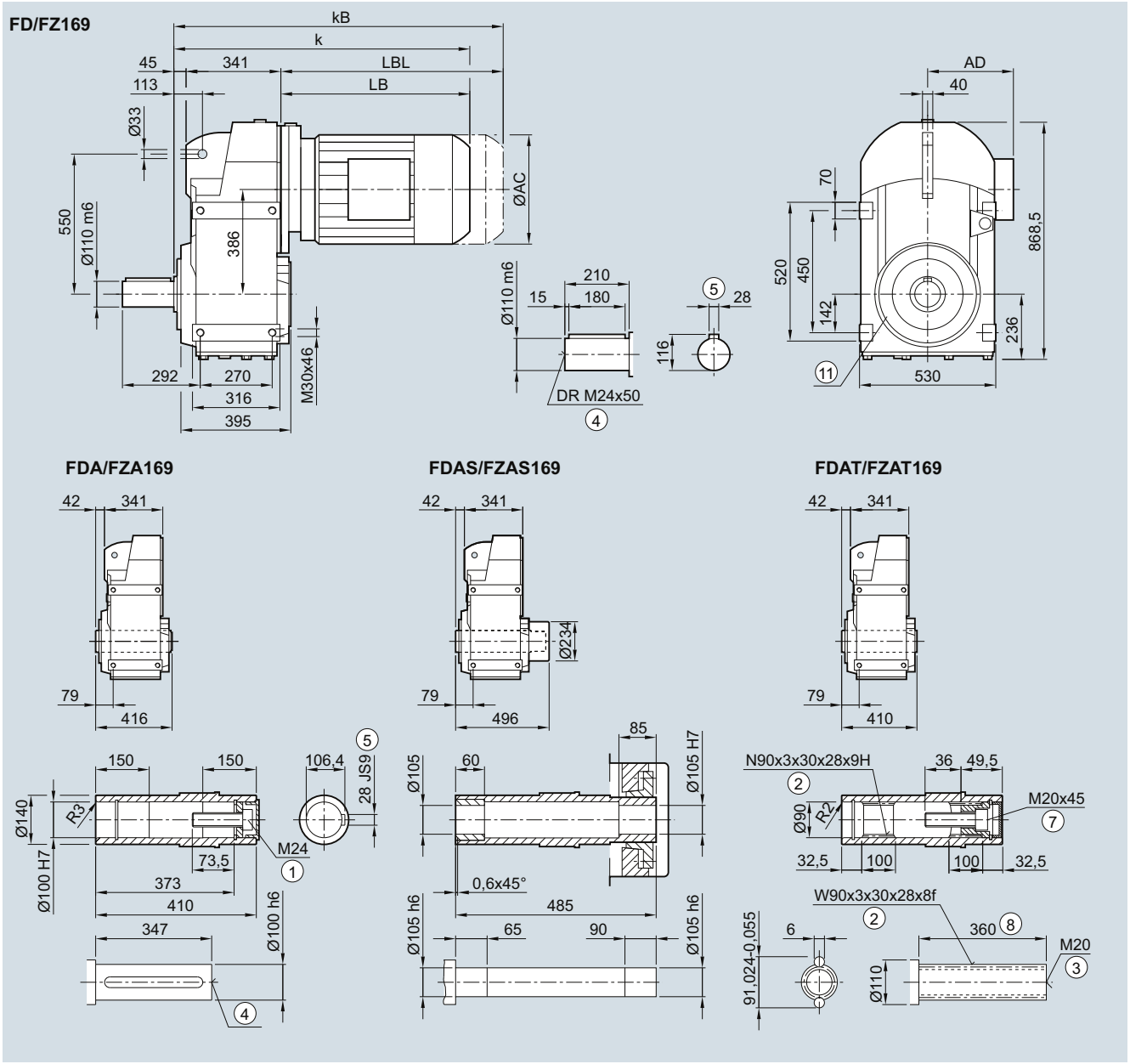

Motor	LE						LES						
	112	112Z	132	132Z	160	160Z	180	180Z	200	200Z	225	225Y	250
AC	222.0	222.0	264.0	264.0	318.0	318.0	352.5	352.5	392.5	392.5	439.0	439.0	487.0
AD[1)]	181.5	181.5	207.0	207.0	241.0	241.0	292.0	292.0	315.0	315.0	382.0	382.0	457.0
k	739.5	764.5	785.0	835.0	867.0	927.0	939.5	969.5	1 007.5	1 032.5	1 052.5	1 112.0	1 159.5
kB	812.5	837.5	889.5	939.5	983.0	1 043.0	1 068.5	1 098.5	1 154.5	1 179.5	1 280.0	1 340.0	1 384.5
LB	353.5	378.5	399.0	449.0	481.0	541.0	553.5	583.0	621.5	646.5	666.0	726.0	773.5
LBL	426.5	451.5	503.5	553.5	597.0	657.0	682.5	712.5	768.5	793.5	894.0	954.0	998.5

① ISO 4014 ② DIN 5480 ③ DIN 332-D ④ DIN 332 ⑤ Feather key/keyway DIN 6885-1 ⑦ ISO 4762 ⑧ Without locating shoulder +1 mm
⑪ Use bores only for housing flange design

1) AD depends on the motor options, for other dimensions see page 8/36.

© Siemens AG 2017

4

FDAD./FZAD.189 gearbox in a shaft-mounted design

FAD030, FADS030, FADT030

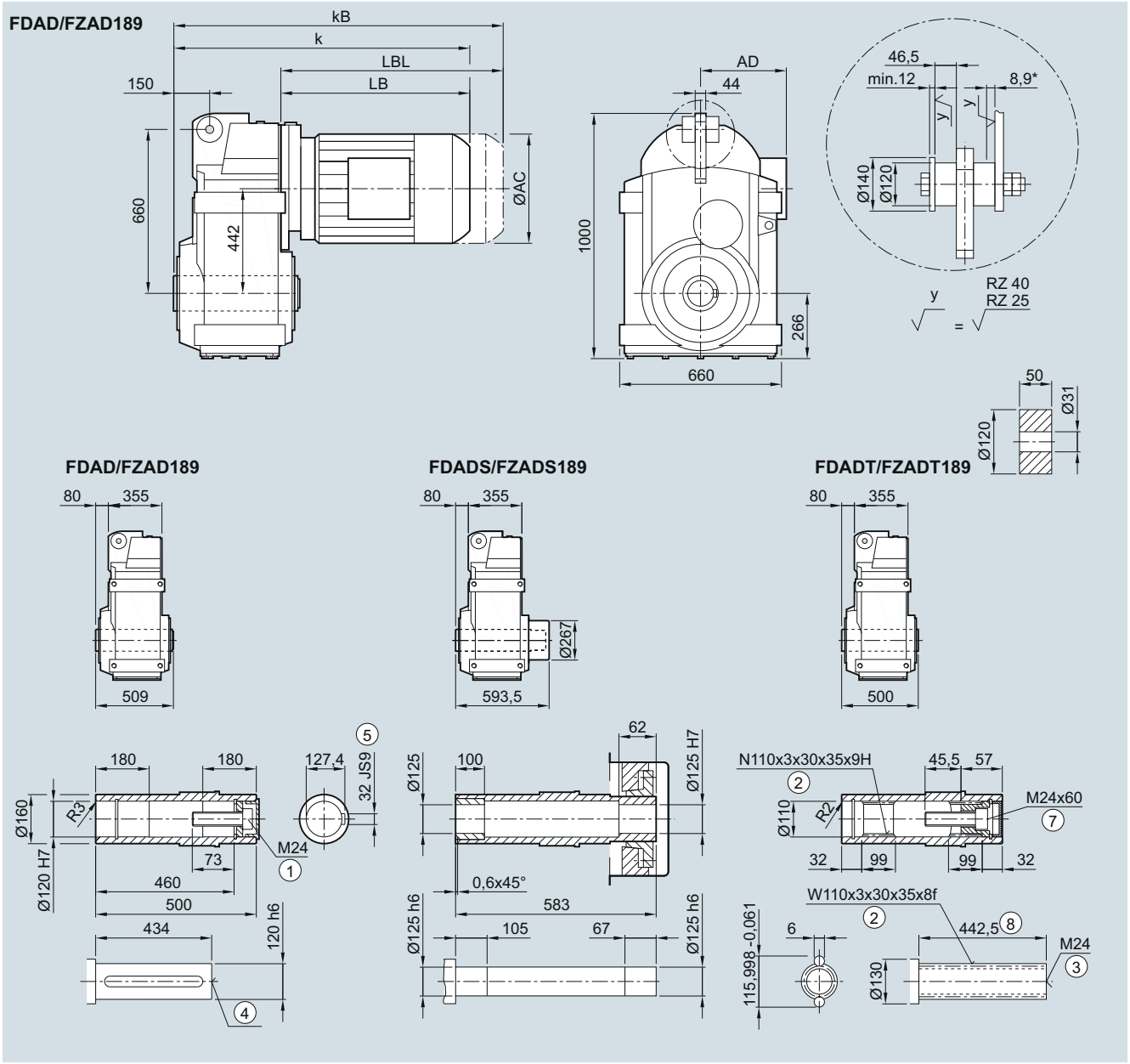

Motor	LE 112	112Z	132	132Z	160	160Z	LES 180	180Z	200	200Z	225	225Y	250
AC	222.0	222.0	264.0	264.0	318.0	318.0	352.5	352.5	392.5	392.5	439.0	439.0	487.0
AD[1)]	181.5	181.5	207.0	207.0	241.0	241.0	292.0	292.0	315.0	315.0	382.0	382.0	457.5
k	788.5	813.5	834.0	884.0	916.0	976.0	988.5	1 018.5	1 056.5	1 081.5	1 101.0	1 161.0	1 208.5
kB	861.5	886.5	938.5	988.5	1 032.0	1 092.0	1 117.5	1 147.5	1 203.5	1 228.5	1 329.0	1 389.0	1 433.5
LB	353.5	378.5	399.0	449.0	481.0	541.0	553.5	583.5	621.5	646.5	666.0	726.0	773.5
LBL	426.5	451.5	503.5	553.5	597.0	657.0	682.5	712.5	768.5	793.5	894.0	954.0	998.5

① ISO 4014 ② DIN 5480 ③ DIN 332-D ④ DIN 332 ⑤ Feather key/keyway DIN 6885-1 ⑦ ISO 4762 ⑧ Without locating shoulder +1 mm
⑪ Use bores only for foot-mounted design

1) AD depends on the motor options, for other dimensions see page 8/36.

* Spring compression at max. torque

© Siemens AG 2017

FD.Z./FZ.Z.189 gearbox in a housing flange design

FZ030, FAZ030, FAZS030, FAZT030

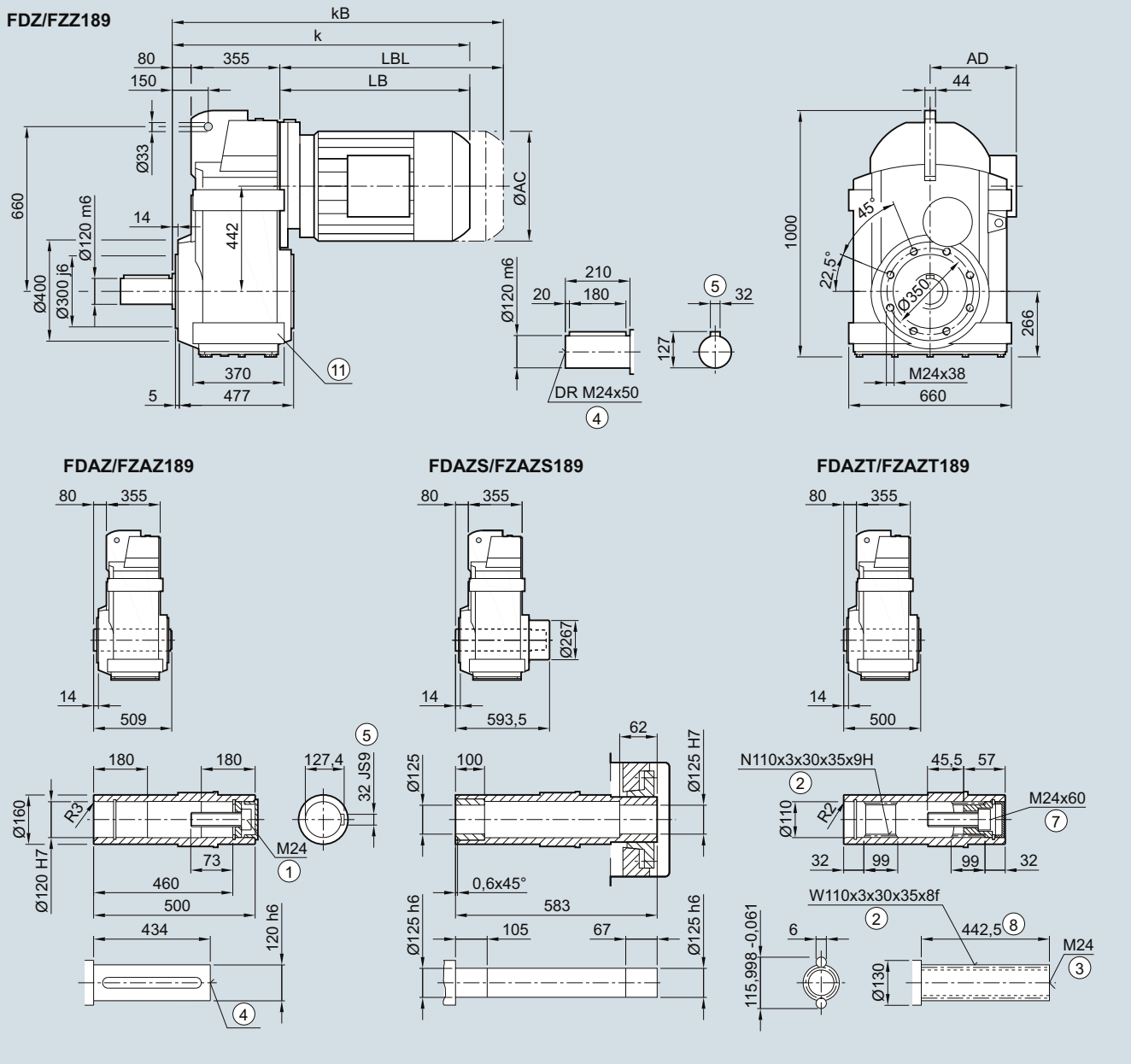

Motor	LE						LES						
	112	112Z	132	132Z	160	160Z	180	180Z	200	200Z	225	225Y	250
AC	222.0	222.0	264.0	264.0	318.0	318.0	352.5	352.5	392.5	392.5	439.0	439.0	487.0
AD[1)]	181.5	181.5	207.0	207.0	241.0	241.0	292.0	292.0	315.0	315.0	382.0	382.0	457.5
k	788.5	813.5	834.0	884.0	916.0	976.0	988.5	1 018.5	1 056.5	1 081.5	1 101.0	1 161.0	1 208.5
kB	861.5	886.5	938.5	988.5	1 032.0	1 092.0	1 117.5	1 147.5	1 203.5	1 228.5	1 329.0	1 389.0	1 433.5
LB	353.5	378.5	399.0	449.0	481.0	541.0	553.5	583.5	621.5	646.5	666.0	726.0	773.5
LBL	426.5	451.5	503.5	553.5	597.0	657.0	682.5	712.5	768.5	793.5	894.0	954.0	998.5

① ISO 4014 ② DIN 5480 ③ DIN 332-D ④ DIN 332 ⑤ Feather key/keyway DIN 6885-1 ⑦ ISO 4762 ⑧ Without locating shoulder +1 mm
⑪ Use bores only for foot-mounted design

1) AD depends on the motor options, for other dimensions see page 8/36.

© Siemens AG 2017

FD.F./FZ.F.189 gearbox in a flange-mounted design

FF030, FAF030, FAFS030, FAFT030

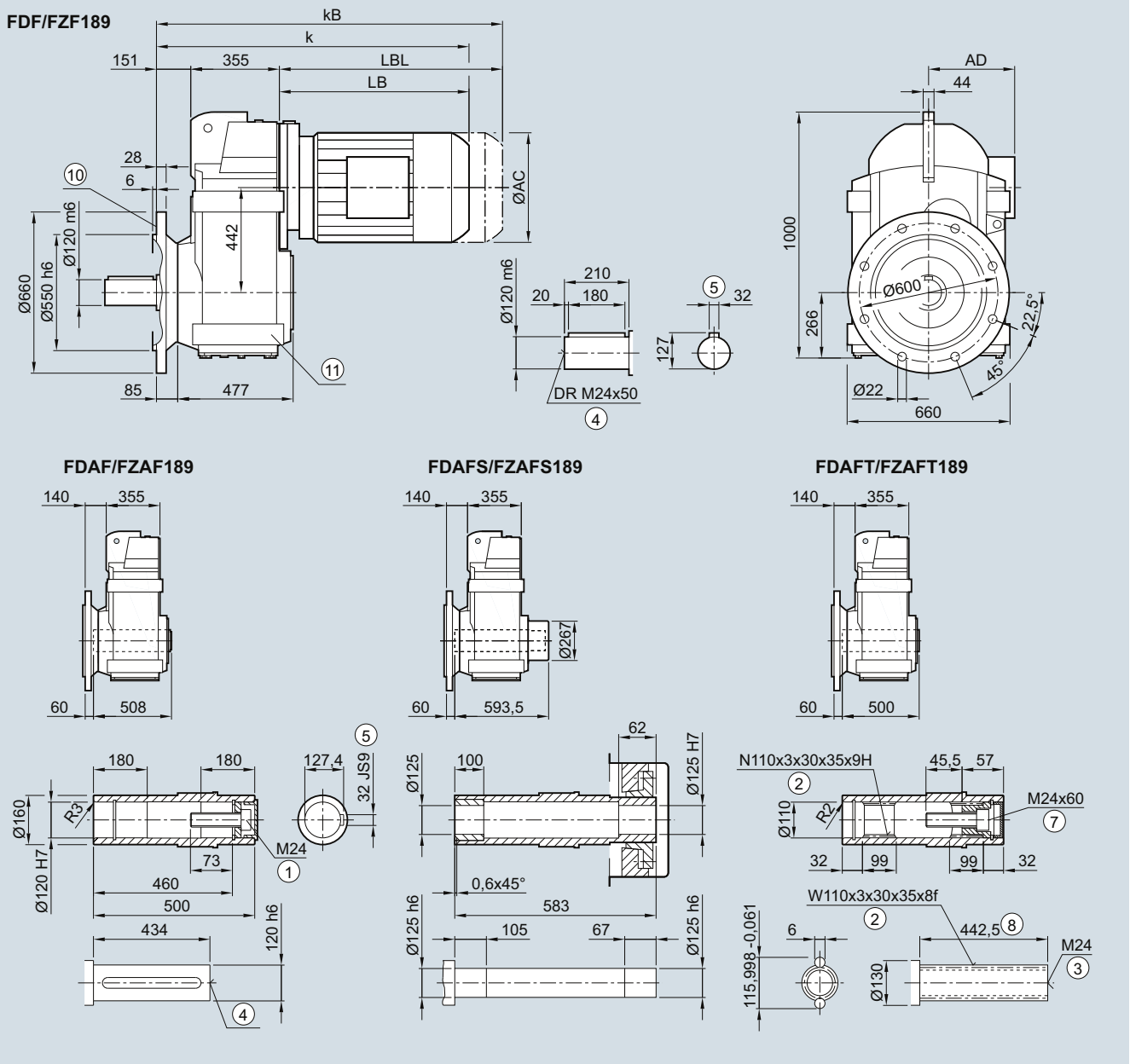

Motor	LE 112	112Z	132	132Z	160	160Z	LES 180	180Z	200	200Z	225	225Y	250
AC	222.0	222.0	264.0	264.0	318.0	318.0	352.5	352.5	392.5	392.5	439.0	439.0	487.0
AD[1)]	181.5	181.5	207.0	207.0	241.0	241.0	292.0	292.0	315.0	315.0	382.0	382.0	457.5
k	859.5	884.5	905.0	955.0	987.0	1 047.0	1 059.5	1 089.5	1 127.5	1 152.5	1 172.0	1 232.0	1 279.5
kB	932.5	957.5	1 009.5	1 059.5	1 103.0	1 163.0	1 188.5	1 218.5	1 274.5	1 299.5	1 400.0	1 460.0	1 504.5
LB	353.5	378.5	399.0	449.0	481.0	541.0	553.5	583.5	621.5	646.5	666.0	726.0	773.5
LBL	426.5	451.5	503.5	553.5	597.0	657.0	682.5	712.5	768.5	793.5	894.0	954.0	998.5

① ISO 4014 ② DIN 5480 ③ DIN 332-D ④ DIN 332 ⑤ Feather key/keyway DIN 6885-1 ⑦ ISO 4762 ⑧ Without locating shoulder +1 mm
⑩ For inner contour see page 4/123 ⑪ Use bores only for foot-mounted design

1) AD depends on the motor options, for other dimensions see page 8/36.

© Siemens AG 2017

FD../FZ..189 gearbox in a foot-mounted design

F030, FA030, FAS030, FAT030

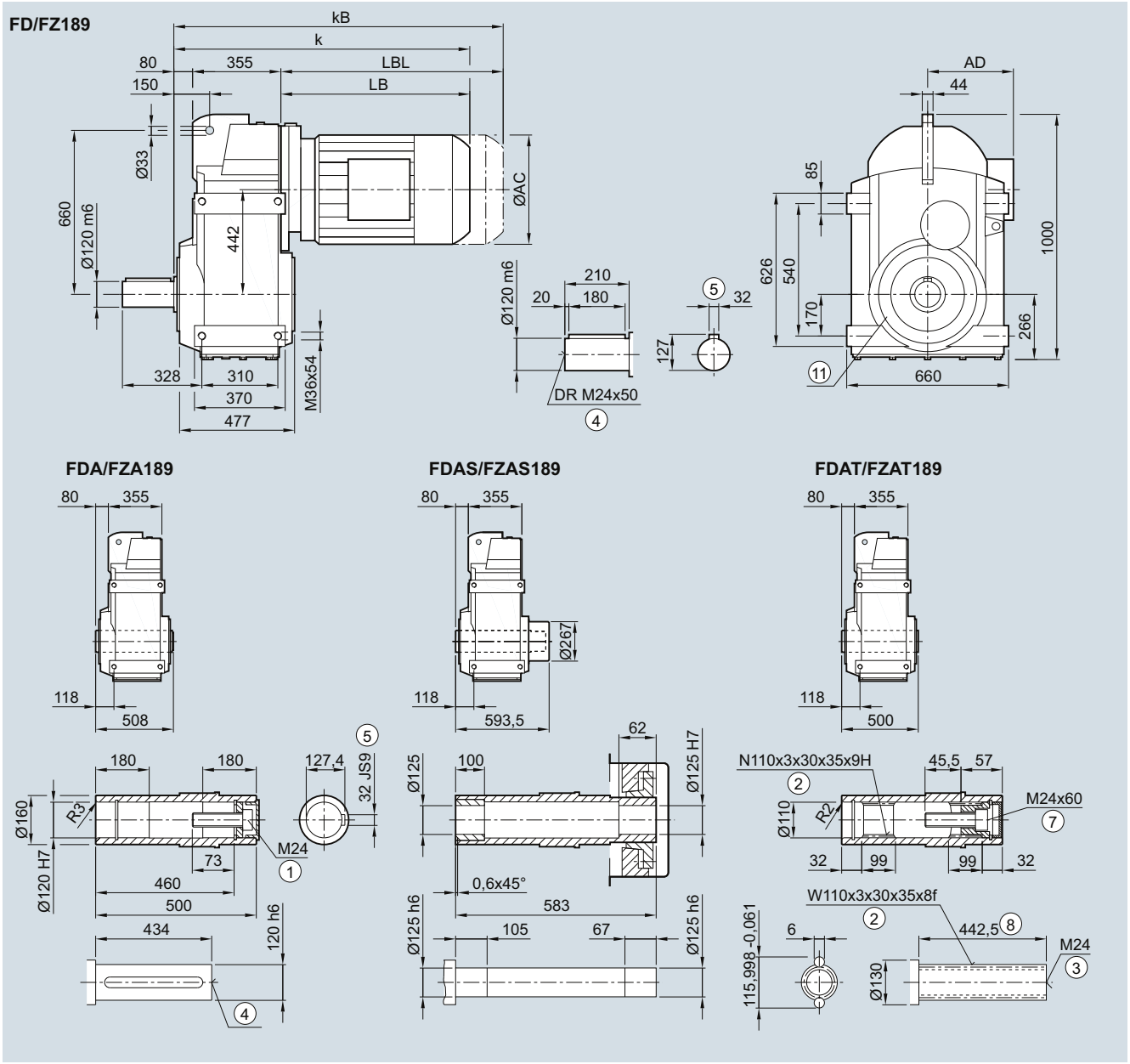

Motor	LE						LES						
	112	112Z	132	132Z	160	160Z	180	180Z	200	200Z	225	225Y	250
AC	222.0	222.0	264.0	264.0	318.0	318.0	352.5	352.5	392.5	392.5	439.0	439.0	487.0
AD[1)]	181.5	181.5	207.0	207.0	241.0	241.0	292.0	292.0	315.0	315.0	382.0	382.0	457.5
k	788.5	813.5	834.0	884.0	916.0	976.0	988.5	1 018.5	1 056.5	1 081.5	1 101.0	1 161.0	1 208.5
kB	861.5	886.5	938.5	988.5	1 032.0	1 092.0	1 117.5	1 147.5	1 203.5	1 228.5	1 329.0	1 389.0	1 433.5
LB	353.5	378.5	399.0	449.0	481.0	541.0	553.5	583.5	621.5	646.5	666.0	726.0	773.5
LBL	426.5	451.5	503.5	553.5	597.0	657.0	682.5	712.5	768.5	793.5	894.0	954.0	998.5

① ISO 4014 ② DIN 5480 ③ DIN 332-D ④ DIN 332 ⑤ Feather key/keyway DIN 6885-1 ⑦ ISO 4762 ⑧ Without locating shoulder +1 mm
⑪ Use bores only for housing flange design

1) AD depends on the motor options, for other dimensions see page 8/36.

© Siemens AG 2017

Dimensions

Parallel shaft tandem geared motors

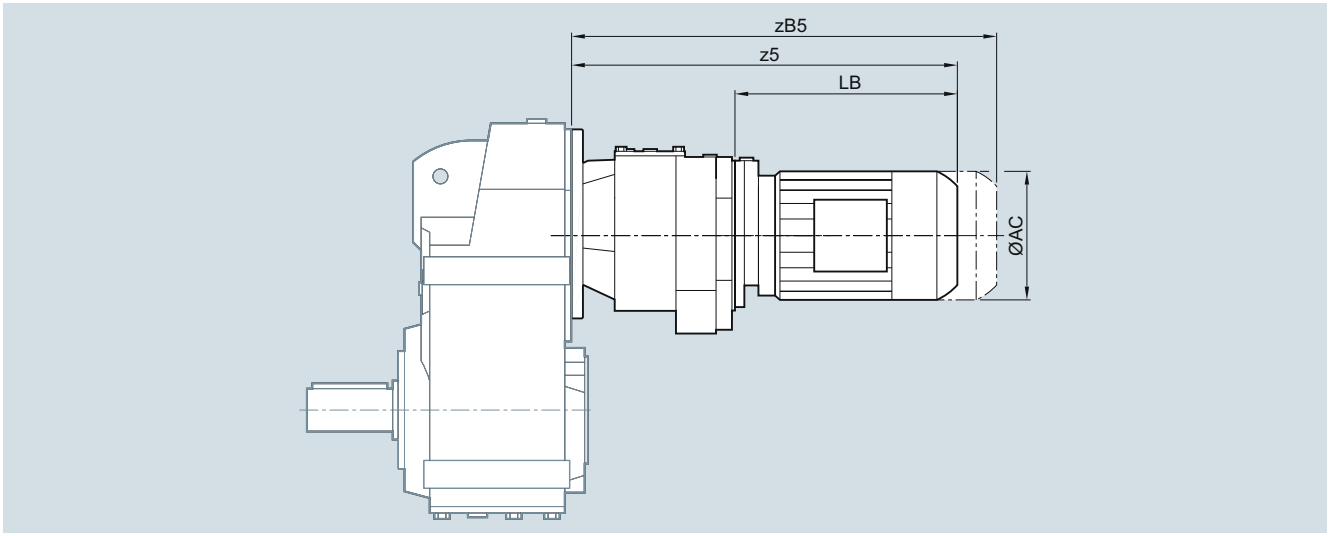

Gearbox	Motor	AC	z5	zB5	LB
FD../FZ..29-D/Z19	LA63	117.8	331.0	375.5	160.5
FD../FZ..39-D/Z19	LA63	117.8	331.0	375.5	160.5
	LA71	138.8	363.0	418.0	184.5
	LA71Z	138.8	382.0	437.0	203.5
FD../FZ..49-D/Z19	LA63	117.8	322.0	366.5	160.5
	LA71	138.8	354.0	409.0	184.5
	LA71Z	138.8	373.0	428.0	203.5
	LE80	156.3	410.0	470.0	240.0
	LE80Z	156.3	445.0	505.0	275.0
FD../FZ..69-D/Z19	LA63	117.8	322.0	366.5	160.5
	LA71	138.8	354.0	409.0	184.5
	LA71Z	138.8	373.0	428.0	203.5
	LE80	156.3	410.0	470.0	240.0
	LE80Z	156.3	445.0	505.0	275.0
FD../FZ..79-D/Z39	LA63	117.8	373.5	418.0	194.0
	LA71	138.8	405.5	460.5	226.0
	LA71Z	138.8	424.5	479.5	245.0
	LE80	156.3	469.5	529.5	290.0
	LE80Z	156.3	504.5	564.5	325.0
FD../FZ..89-D/Z39	LA63	117.8	356.5	401.0	194.0
	LA71	138.8	388.5	443.5	226.0
	LA71Z	138.8	407.5	462.5	245.0
	LE80	156.3	452.5	512.5	290.0
	LE80Z	156.3	487.5	547.5	325.0
	LE90	173.8	514.0	584.0	351.5
	LE90Z	173.8	554.0	624.0	391.5
FD..109-D/Z39	LA63	117.8	347.5	392.0	194.0
	LA71	138.8	379.5	434.5	226.0
	LA71Z	138.8	398.5	453.5	245.0
	LE80	156.3	443.5	503.5	290.0
	LE80Z	156.3	478.5	538.5	325.0
	LE90	173.8	505.0	575.0	351.5
	LE90Z	173.8	545.0	615.0	391.5
	LE100	198.0	561.5	640.0	408.0
	LE100Z	198.0	596.5	675.0	443.0

Gearbox	Motor	AC	z5	zB5	LB
FD..129-D/Z49	LA63	117.8	376.5	421.0	184.5
	LA71	138.8	408.5	463.5	216.5
	LA71Z	138.8	427.5	482.5	235.5
	LE80	156.3	472.5	532.5	280.5
	LE80Z	156.3	507.5	567.5	315.5
	LE90	173.8	534.0	604.0	342.0
	LE90Z	173.8	574.0	644.0	382.0
	LE100	198.0	590.5	669.0	398.5
	LE100Z	198.0	625.5	704.0	433.5
	LE112	222.0	600.5	673.5	408.5
	LE112Z	222.0	635.0	708.0	443.0
FD..149-D/Z49	LA63	117.8	366.0	410.5	184.5
	LA71	138.8	398.0	453.0	216.5
	LA71Z	138.8	417.0	472.0	235.5
	LE80	156.3	462.0	522.0	280.5
	LE80Z	156.3	497.0	557.0	315.5
	LE90	173.8	523.5	593.5	342.0
	LE90Z	173.8	563.5	633.5	382.0
	LE100	198.0	580.0	658.5	398.5
	LE100Z	198.0	615.0	693.5	433.5
	LE112	222.0	590.0	663.0	408.5
	LE112Z	222.0	624.5	697.5	443.0
	LE132	264.0	643.0	747.5	461.5
	LE132Z	264.0	693.0	797.5	511.5

© Siemens AG 2017

Parallel shaft tandem geared motors

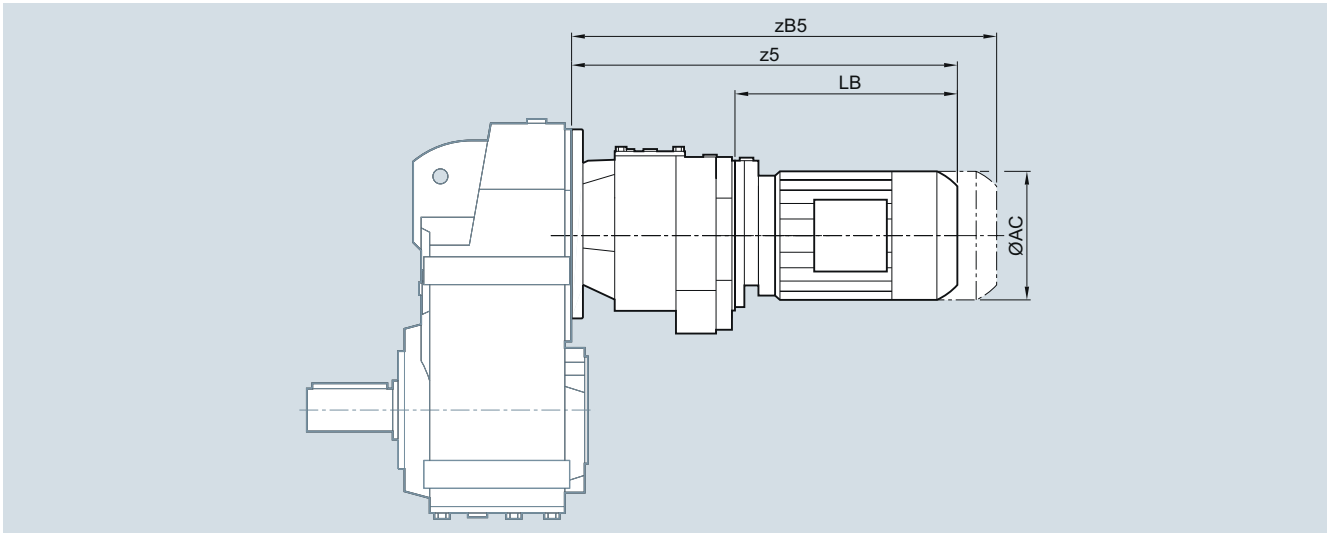

Gearbox	Motor	AC	z5	zB5	LB
FD..169-D/Z69	LA63	117.8	391.5	436.0	184.5
	LA71	138.8	423.5	478.5	216.5
	LA71Z	138.8	442.5	497.5	235.5
	LE80	156.3	487.5	547.5	280.5
	LE80Z	156.3	522.5	582.5	315.5
	LE90	173.8	549.0	619.0	342.0
	LE90Z	173.8	589.0	659.0	382.0
	LE100	198.0	605.5	684.0	398.5
	LE100Z	198.0	640.5	719.0	433.5
	LE112	222.0	615.5	688.5	408.5
	LE112Z	222.0	650.0	723.0	443.0
	LE132	264.0	668.5	773.0	461.5
	LE132Z	264.0	718.5	823.0	511.5
FD..189-D/Z69	LA63	117.8	391.5	436.0	184.5
	LA71	138.8	423.5	478.5	216.5
	LA71Z	138.8	442.5	497.5	235.5
	LE80	156.3	487.5	547.5	280.5
	LE80Z	156.3	522.5	582.5	315.5
	LE90	173.8	549.0	619.0	342.0
	LE90Z	173.8	589.0	659.0	382.0
	LE100	198.0	605.5	684.0	398.5
	LE100Z	198.0	640.5	719.0	433.5
	LE112	222.0	615.5	688.5	408.5
	LE112Z	222.0	650.0	723.0	443.0
	LE132	264.0	668.5	773.0	461.5
	LE132Z	264.0	718.5	823.0	511.5

© Siemens AG 2017

4

SIMOLOC assembly system

FDADR/FZADR

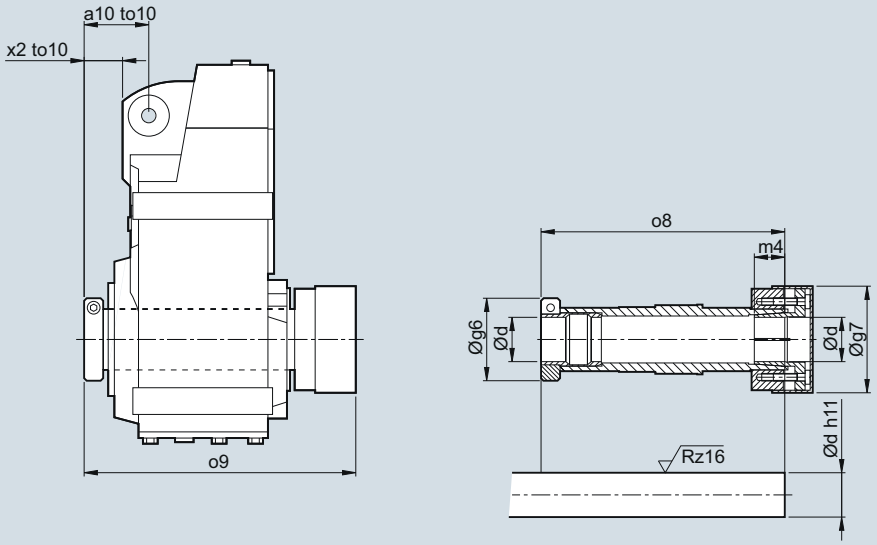

Note mounting tolerance to10 when positioning the torque arm.

d	g6	g7	m4	o8	o9	a10	to10	x2
FDADR/FZADR29								
25	58.5	56	18.5	140.5	161	40.0	+2.1	23.5
20							+0.6	
1"								
0.75“								
FDADR/FZADR39								
30	62.0	76	22	160.5	181	46.5	+2.2	29.5
25							+0.7	
1.25"								
1.1875"								
1"								
FDADR/FZADR49								
35	65.0	84	24	192.0	214	47.0	+2.6	24.5
30							+0.8	
1.375"								
1.4375"								
1.25"								
1.1875"								
FDADR/FZADR.69								
40	79.5	94	30	217.5	240	59.5	+2.5	37.0
35							+0.7	
1.5"								
1.625"								
1.4375"								
1.375"								
FDADR/FZADR79								
40	79.5	94	30	232.0	259	60.0	+3.2	34.0
35							+1.4	
1.5"								
1.625"								
1.4375"								
1.375"								
FDADR/FZADR89								
50	89.0	114	32	264.0	295	69.0	+3.4	32.0
40							+1.5	
2"								
1.9375"								
1.75"								
1.625"								

© Siemens AG 2017

Protection covers

Protection cover for hollow shaft

F.A, F.AF, F.AZ, F.AD

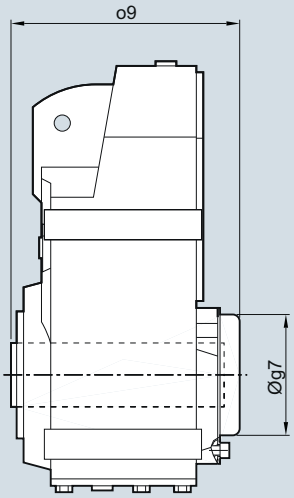

Gearbox type	F.A..29	F.A..39	F.A..49	F.A..69	F.A..79	F.A..89	F.A..109	F.A..129	F.A..149	F.A..169	F.A..189
Protection cover											
g7	67.0	82.5	80.0	99.0	99.0	137.0	187.0	187.0	218.0	257.5	309.5
o9	120.5	134.0	177.0	179.0	192.5	232.5	281.5	348.0	425.0	520.0	623.5

Protection cover for hollow shaft with shrink disk

F.AS, F.AFS, F.AZS, F.ADS

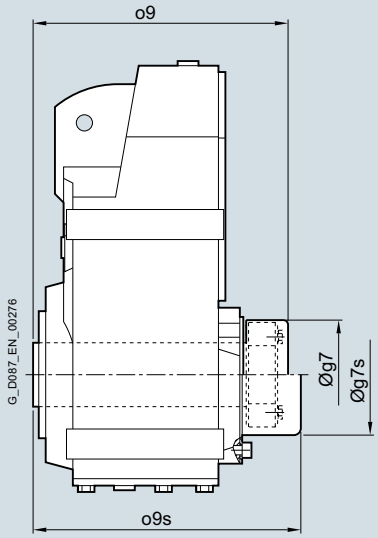

Gearbox type	F.A..29	F.A..39	F.A..49	F.A..69	F.A..79	F.A..89	F.A..109	F.A..129	F.A..149	F.A..169	F.A..189
Rotating protective cover with shrink disk version											
max. motor frame size that can be mounted	80	90	100	100	132	160	200	225	250	250	250
g7	57.0	76.0	84.0	84.0	94.0	119.0	145.0	159.0	201.0	234.0	267.0
o9	132.5	149.5	182.0	198.0	215.5	247.5	282.5	348.5	408.5	496.0	593.5
Protection cover											
max. motor frame size that can be mounted	71	80	100	100	112	132	200	225	250	250	250
g7s	58.0	82.5	86.0	99.0	99.0	137.0	187.0	187.0	218.0	257.5	309.5
o9s	135.5	170.0	198.0	210.0	223.5	284.5	308.5	375.0	425.0	520.0	623.5

© Siemens AG 2017

4

Protection covers

Protection cover for hollow shaft with SIMOLOC assembly system

F.ADR

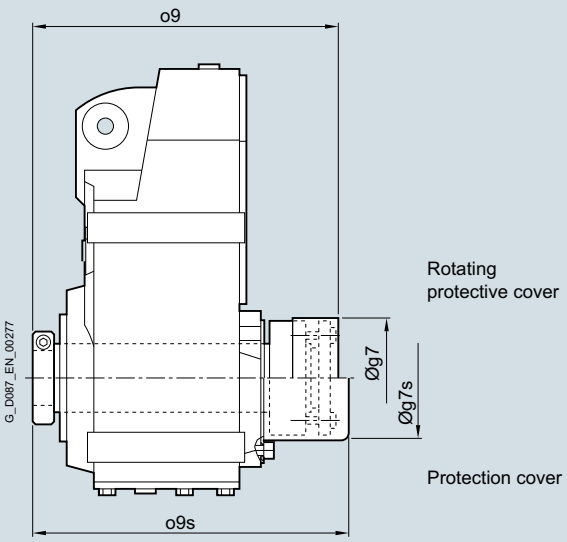

Gearbox type	F.ADR29	F.ADR39	F.ADR49	F.ADR69	F.ADR79	F.ADR89
Rotating protective cover						
max. motor frame size that can be mounted	80	90	100	100	132	160
g7	56.0	76.0	84.0	94.0	94.0	114.0
o9	161.0	181.0	214.0	240.0	259.0	295.0
Protection cover						
max. motor frame size that can be mounted	71	80	100	100	112	132
g7s	58.0	82.5	86.0	99.0	99.0	137.0
o9s	164.0	184.0	219.0	249.5	263.5	303.5

© Siemens AG 2017

Inner contour of the flange design

Notes regarding the design of the customer's interface for the solid shaft design

FDF/FZF

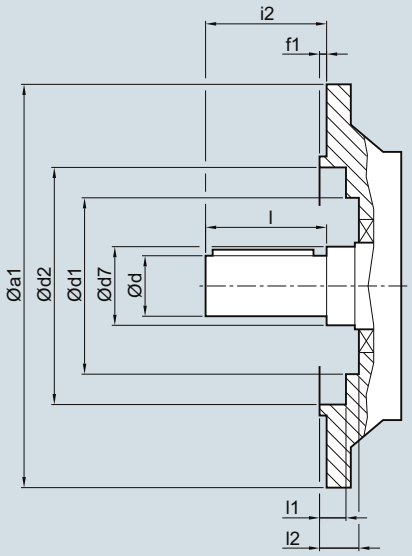

Gearbox type	a1	d	d7	d1	d2	f1	i2	l	l1	l2
FDF/FZF29	120	25	40	-	70	3.0	40	40	24.0	-
	160	25	40	70	101	3.5	40	40	8.5	24.5
FDF/FZF39	160	25	30	-	100	3.5	50	50	5.0	-
FDF/FZF49	200	30	35	-	118	3.5	60	60	5.5	-
FDF/FZF69	250	35	45	-	165	4.0	70	70	6.5	-
FDF/FZF79	250	40	55	-	165	4.0	80	80	6.5	-
FDF/FZF89	300	50	55	-	165	4.0	100	100	8.0	-
FDF/FZF109	350	60	65	-	235	5.0	120	120	9.0	-
FDF/FZF129	450	70	75	-	336	5.0	140	140	9.0	-
FDF/FZF149	450	90	100	-	336	5.0	170	170	10.0	-
FDF/FZF169	550	110	120	-	427	5.0	210	210	10.0	-
FDF/FZF189	660	120	160	-	517	6.0	210	210	11.0	-

Notes regarding the design of the customer's interface for the hollow shaft design

FDAF./FZAF.

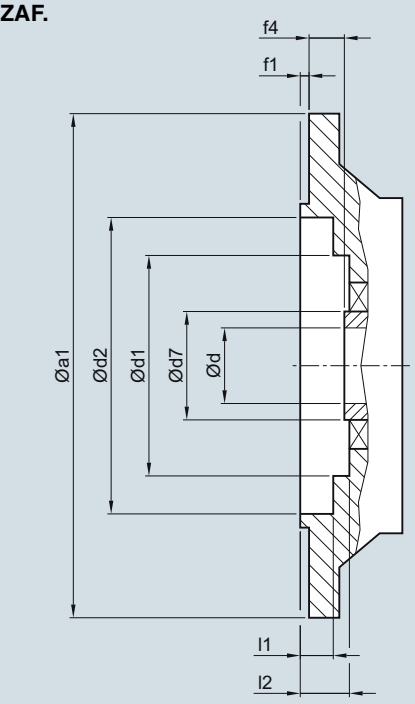

Gearbox type	a1	d	d7	d1	d2	f1	f4	l1	l2
FDAF./FZAF.29	120	25	40	-	70	3.0	20.0	24.0	-
	160	25	40	70	101	3.5	20.0	8.5	24.5
FDAF./FZAF.39	160	30	45	80	102	3.5	24.0	2.0	29.5
FDAF./FZAF.49	200	35	50	90	120	3.5	25.0	4.0	30.5
FDAF./FZAF.69	250	40	55	104	165	4.0	23.5	2.0	29.5
FDAF./FZAF.79	250	40	55	104	165	4.0	23.0	2.0	29.5
FDAF./FZAF.89	300	50	70	135	215	4.0	37.0	2.0	44.5
FDAF./FZAF.109	350	60	85	184	210	5.0	36.0	13.0	45.0
FDAF./FZAF.129	450	70	95	184	336	5.0	41.5	16.5	48.5
FDAF./FZAF.149	450	90	120	214	330	5.0	41.0	10.5	50.0
FDAF./FZAF.169	550	100	140	254	426	5.0	56.0	14.5	56.0
FDAF./FZAF.189	660	120	160	306	518	6.0	66.0	6.0	62.0

© Siemens AG 2017

4

Pin holes

In the case of gearboxes F.Z.109 and F.Z.129, the customer's interface can be pinned on the housing flange (C type).

The output flanges have been designed to ensure the reliable transmission of the permissible torques and radial forces by the bolt connections.

If additional fastening is required, in the case of high shock loads, for example, the existing drilled pin holes can be used.

The gearboxes can also be drilled and pinned together with the machine. The listed dimensions must be complied with.

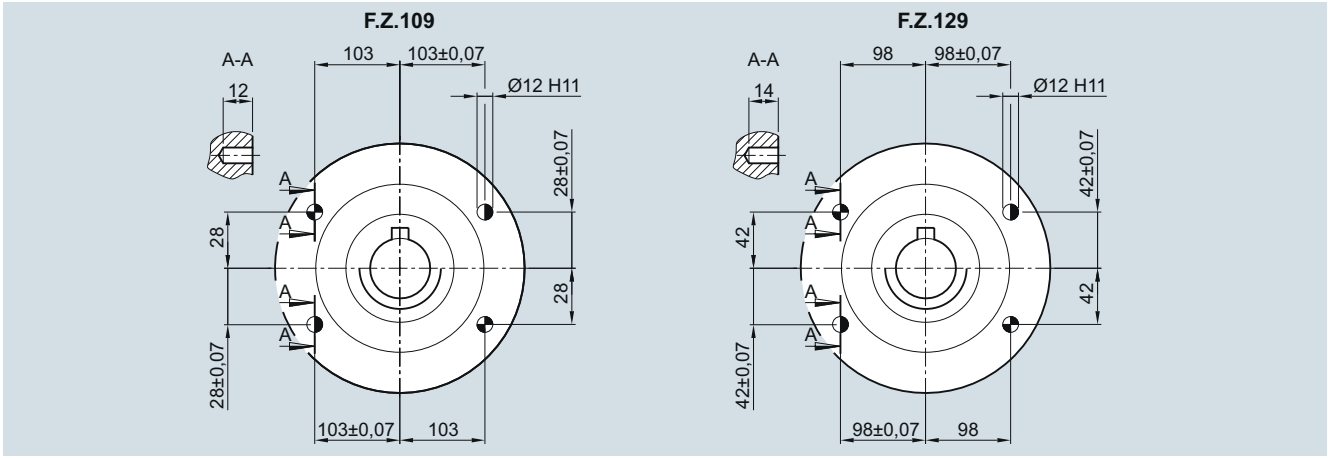

◑ Spring pins, heavy-duty design, to DIN 1481: Use pin holes provided in the housing flange.

◓ Grooved cylindrical pins with chamfer to EN 28740 / ISO 8740: Drill connecting component together with housing.

© Siemens AG 2017

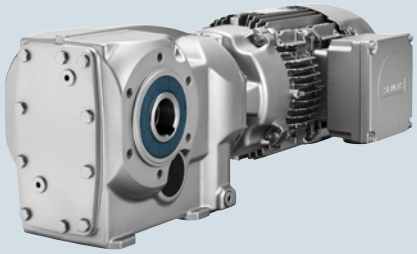

5/2 **Orientation**

5/3 **Geared motors up to 55 kW**
5/3 Selection and ordering data

5/49 **Transmission ratios and torques**
5/49 Selection and ordering data

5/63 **Transmission ratios and torques for very low speeds**
5/63 Selection and ordering data

5/73 **Dimensions**
5/73 Dimensional drawing overview
5/75 Bevel geared motors B..19
5/79 Bevel geared motors B..29
5/83 Bevel geared motors B..39
5/87 Bevel geared motors B..49
5/91 Bevel geared motors K..39
5/95 Bevel geared motors K..49
5/99 Bevel geared motors K..69
5/103 Bevel geared motors K..79
5/107 Bevel geared motors K..89
5/111 Bevel geared motors K..109
5/115 Bevel geared motors K..129
5/119 Bevel geared motors K..149
5/123 Bevel geared motors K..169
5/127 Bevel geared motors K..189
5/131 Bevel tandem geared motors
5/132 SIMOLOC assembly system

Protection covers
5/134 Protection covers for hollow shaft
5/134 Protection covers for hollow shaft with shrink disk
5/135 Protection covers for hollow shaft with SIMOLOC assembly system
5/136 Inner contour of the flange design
5/137 Pin holes

© Siemens AG 2017

Orientation

SIMOGEAR bevel geared motor B

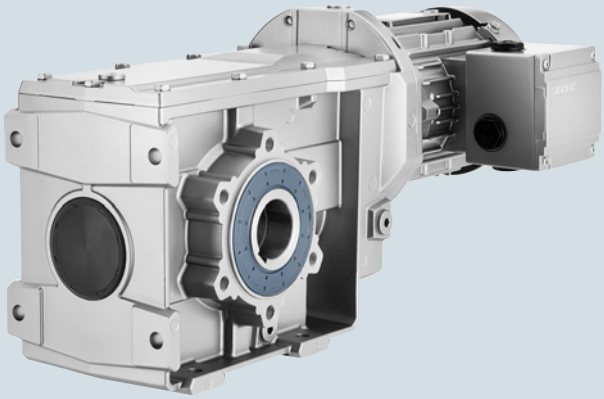

Fig. 5/1 Bevel geared motor B

Gearbox designation	Number of sizes	Maximum output torque	Transmission ratio	Maximum motor power
		T_{2N}	i	P_1
		Nm	-	kW
B19 … B49 (2-stage)	4	50… 450	3.5 … 59	7.5

SIMOGEAR bevel geared motor K

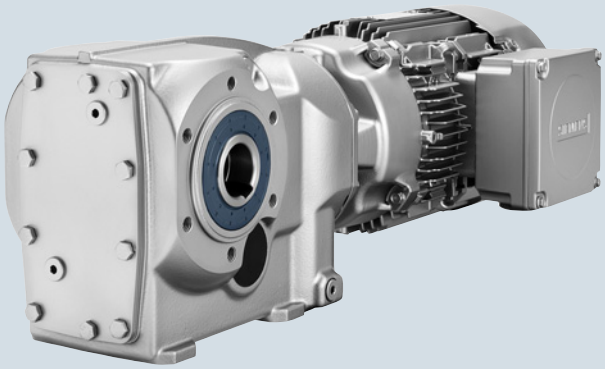

Fig. 5/2 Bevel geared motor K

Gearbox designation	Number of sizes	Maximum output torque	Transmission ratio	Maximum motor power
		T_{2N}	i	P_1
		Nm	-	kW
K39 … K189 (3-stage)	10	150 … 19 500	5.7 … 237	55
K.39-D/Z19 … K189-DZ69 (5-stage and 6-stage)	10	220 … 19 500	170 … 14 900	7.5

SIMOGEAR bevel geared motors are available in the following versions:

Transmission stages
- 2-stage or 3-stage bevel geared motors
- 5-stage or 6-stage bevel geared motors for very low output speeds

Versions
- Shaft-mounted design
- Flange-mounted design
- Design with integrated housing flange
- Foot-mounted design

Mounting
- Hollow shaft design with feather key
- Hollow shaft design with splined shaft
- Hollow shaft design with shrink disk
- Hollow shaft design with SIMOLOC assembly system
- Solid shaft design with and without feather key

For 2-stage bevel gearboxes B, the torque arm is supplied loose to enable it to be mounted as required on site. The position of the torque arm can be freely selected.

© Siemens AG 2017

Selection and ordering data

P_{rated}	n_2	T_2	i	F_{R2}	f_B	m	Article No.	Order code
kW	rpm	Nm	-	N	-	kg	(Article No. supplement ➞ below)	No. of poles
0.09	**K.39-LA63MF6**							
	5.4	159	157.32	6 300	1.4	15	**2KJ3504 - ■ BD11 - ■ ■ J2**	**P01**
	6.1	141	139.54	6 370	1.6	15	**2KJ3504 - ■ BD11 - ■ ■ H2**	**P01**
	7.0	122	121.07	6 440	1.8	15	**2KJ3504 - ■ BD11 - ■ ■ G2**	**P01**
	7.7	111	110.06	6 480	2.0	15	**2KJ3504 - ■ BD11 - ■ ■ F2**	**P01**
	B.29-LA63MF6							
	18	47	46.85	4 200	2.3	9	**2KJ3501 - ■ BD11 - ■ ■ B2**	**P01**
	20	42	41.56	4 200	2.6	9	**2KJ3501 - ■ BD11 - ■ ■ A2**	**P01**
	24	36	36.06	4 200	3.0	9	**2KJ3501 - ■ BD11 - ■ ■ X1**	**P01**
	26	33	32.78	4 200	3.3	9	**2KJ3501 - ■ BD11 - ■ ■ W1**	**P01**
	B.29-LA63MD4							
	30	29	46.85	4 200	3.8	9	**2KJ3501 - ■ BB11 - ■ ■ B2**	
	34	26	41.56	4 200	4.3	9	**2KJ3501 - ■ BB11 - ■ ■ A2**	
	39	22	36.06	4 200	5.0	9	**2KJ3501 - ■ BB11 - ■ ■ X1**	
	43	20	32.78	4 200	5.5	9	**2KJ3501 - ■ BB11 - ■ ■ W1**	
	50	17	28.11	4 200	6.4	9	**2KJ3501 - ■ BB11 - ■ ■ V1**	
	55	16	25.56	4 200	7.0	9	**2KJ3501 - ■ BB11 - ■ ■ U1**	
	62	14	22.41	4 200	8.0	9	**2KJ3501 - ■ BB11 - ■ ■ T1**	
	70	12	20.00	4 200	9.0	9	**2KJ3501 - ■ BB11 - ■ ■ S1**	
	79	11	17.82	4 200	10	9	**2KJ3501 - ■ BB11 - ■ ■ R1**	
	85	10	16.45	4 200	11	9	**2KJ3501 - ■ BB11 - ■ ■ Q1**	
	97	8.8	14.40	4 200	12	9	**2KJ3501 - ■ BB11 - ■ ■ P1**	
	111	7.8	12.63	4 200	14	9	**2KJ3501 - ■ BB11 - ■ ■ N1**	
	B.19-LA63MF6							
	20	43	42.10	1 910	1.2	8	**2KJ3500 - ■ BD11 - ■ ■ A2**	**P01**
	23	38	37.28	1 910	1.3	8	**2KJ3500 - ■ BD11 - ■ ■ X1**	**P01**
	26	33	32.39	1 910	1.5	8	**2KJ3500 - ■ BD11 - ■ ■ W1**	**P01**
	29	30	29.44	1 910	1.7	8	**2KJ3500 - ■ BD11 - ■ ■ V1**	**P01**
	B.19-LA63MD4							
	33	26	42.10	1 910	1.9	8	**2KJ3500 - ■ BB11 - ■ ■ A2**	
	38	23	37.28	1 910	2.2	8	**2KJ3500 - ■ BB11 - ■ ■ X1**	
	43	20	32.39	1 910	2.5	8	**2KJ3500 - ■ BB11 - ■ ■ W1**	
	48	18	29.44	1 910	2.8	8	**2KJ3500 - ■ BB11 - ■ ■ V1**	
	56	15	25.06	1 910	3.2	8	**2KJ3500 - ■ BB11 - ■ ■ U1**	
	61	14	22.78	1 910	3.6	8	**2KJ3500 - ■ BB11 - ■ ■ T1**	
	70	12	19.86	1 910	4.1	8	**2KJ3500 - ■ BB11 - ■ ■ S1**	
	79	11	17.78	1 910	4.6	8	**2KJ3500 - ■ BB11 - ■ ■ R1**	
	89	9.7	15.79	1 910	5.2	8	**2KJ3500 - ■ BB11 - ■ ■ Q1**	
	96	8.9	14.57	1 910	5.6	8	**2KJ3500 - ■ BB11 - ■ ■ P1**	
	111	7.8	12.66	1 910	6.4	8	**2KJ3500 - ■ BB11 - ■ ■ N1**	
	127	6.8	11.00	1 910	7.4	8	**2KJ3500 - ■ BB11 - ■ ■ M1**	
	141	6.1	9.93	1 910	8.2	8	**2KJ3500 - ■ BB11 - ■ ■ L1**	
	150	5.7	9.35	1 910	8.7	8	**2KJ3500 - ■ BB11 - ■ ■ K1**	
	172	5	8.15	1 910	9.4	8	**2KJ3500 - ■ BB11 - ■ ■ J1**	
	178	4.8	7.87	1 910	7.9	8	**2KJ3500 - ■ BB11 - ■ ■ H1**	
	200	4.3	6.99	1 910	8.9	8	**2KJ3500 - ■ BB11 - ■ ■ G1**	
	217	4	6.45	1 910	9.8	8	**2KJ3500 - ■ BB11 - ■ ■ F1**	

Article No. supplement		
Shaft design	**1, 5, 6, 7 or 9**	➞ page 10/39
Frequency and voltage	**2 or 9**	➞ page 11/2
Gearbox mounting type	**A, D, F or H**	➞ page 10/37

© Siemens AG 2017

Selection and ordering data (continued)

P_{rated}	n_2	T_2	i	F_{R2}	f_B	m	Article No.	Order code
kW	rpm	Nm	-	N	-	kg	(Article No. supplement ➞ below)	No. of poles
0.09	**B.19-LA63MD4**							
	250	3.4	5.61	1 910	11	8	**2KJ3500 - ■ BB11 - ■ ■ E1**	
	287	3	4.87	1 910	12	8	**2KJ3500 - ■ BB11 - ■ ■ D1**	
	318	2.7	4.40	1 910	13	8	**2KJ3500 - ■ BB11 - ■ ■ C1**	
	338	2.5	4.14	1 910	13	8	**2KJ3500 - ■ BB11 - ■ ■ B1**	
	388	2.2	3.61	1 910	14	8	**2KJ3500 - ■ BB11 - ■ ■ A1**	
0.12	**K.49-LA63MG6**							
	5.0	225	200.25	8 770	1.8	22	**2KJ3505 - ■ BE11 - ■ ■ J2**	**P01**
	5.6	200	178.06	8 850	2.1	22	**2KJ3505 - ■ BE11 - ■ ■ H2**	**P01**
	K.39-LA63MG6							
	6.4	180	157.32	6 230	1.2	15	**2KJ3504 - ■ BE11 - ■ ■ J2**	**P01**
	7.2	160	139.54	6 300	1.4	15	**2KJ3504 - ■ BE11 - ■ ■ H2**	**P01**
	8.3	139	121.07	6 380	1.6	15	**2KJ3504 - ■ BE11 - ■ ■ G2**	**P01**
	K.39-LA63ME4							
	8.6	134	157.32	6 400	1.6	15	**2KJ3504 - ■ BC11 - ■ ■ J2**	
	9.7	118	139.54	6 460	1.9	15	**2KJ3504 - ■ BC11 - ■ ■ H2**	
	11	103	121.07	6 510	2.1	15	**2KJ3504 - ■ BC11 - ■ ■ G2**	
	B.29-LA63MG6							
	21	54	46.85	4 200	2.0	9	**2KJ3501 - ■ BE11 - ■ ■ B2**	**P01**
	24	48	41.56	4 200	2.3	9	**2KJ3501 - ■ BE11 - ■ ■ A2**	**P01**
	28	41	36.06	4 200	2.7	9	**2KJ3501 - ■ BE11 - ■ ■ X1**	**P01**
	B.29-LA63ME4							
	29	40	46.85	4 200	2.8	9	**2KJ3501 - ■ BC11 - ■ ■ B2**	
	32	35	41.56	4 200	3.1	9	**2KJ3501 - ■ BC11 - ■ ■ A2**	
	37	31	36.06	4 200	3.6	9	**2KJ3501 - ■ BC11 - ■ ■ X1**	
	41	28	32.78	4 200	4.0	9	**2KJ3501 - ■ BC11 - ■ ■ W1**	
	48	24	28.11	4 200	4.6	9	**2KJ3501 - ■ BC11 - ■ ■ V1**	
	53	22	25.56	4 200	5.1	9	**2KJ3501 - ■ BC11 - ■ ■ U1**	
	60	19	22.41	4 200	5.8	9	**2KJ3501 - ■ BC11 - ■ ■ T1**	
	68	17	20.00	4 200	6.5	9	**2KJ3501 - ■ BC11 - ■ ■ S1**	
	76	15	17.82	4 200	7.3	9	**2KJ3501 - ■ BC11 - ■ ■ R1**	
	82	14	16.45	4 200	7.9	9	**2KJ3501 - ■ BC11 - ■ ■ Q1**	
	94	12	14.40	4 200	9.0	9	**2KJ3501 - ■ BC11 - ■ ■ P1**	
	107	11	12.63	4 200	10	9	**2KJ3501 - ■ BC11 - ■ ■ N1**	
	118	9.7	11.46	4 200	11	9	**2KJ3501 - ■ BC11 - ■ ■ M1**	
	125	9.2	10.78	4 200	12	9	**2KJ3501 - ■ BC11 - ■ ■ L1**	
	142	8.1	9.51	4 200	14	9	**2KJ3501 - ■ BC11 - ■ ■ K1**	
	172	6.7	7.84	4 150	11	9	**2KJ3501 - ■ BC11 - ■ ■ H1**	
	183	6.3	7.38	4 070	12	9	**2KJ3501 - ■ BC11 - ■ ■ G1**	
	207	5.5	6.51	3 900	14	9	**2KJ3501 - ■ BC11 - ■ ■ F1**	
	B.19-LA63MG6							
	24	48	42.10	1 910	1.0	8	**2KJ3500 - ■ BE11 - ■ ■ A2**	**P01**
	27	43	37.28	1 910	1.2	8	**2KJ3500 - ■ BE11 - ■ ■ X1**	**P01**
	31	37	32.39	1 910	1.3	8	**2KJ3500 - ■ BE11 - ■ ■ W1**	**P01**
	B.19-LA63ME4							
	32	36	42.10	1 910	1.4	8	**2KJ3500 - ■ BC11 - ■ ■ A2**	
	36	32	37.28	1 910	1.6	8	**2KJ3500 - ■ BC11 - ■ ■ X1**	
	42	28	32.39	1 910	1.8	8	**2KJ3500 - ■ BC11 - ■ ■ W1**	

Article No. supplement		
Shaft design	**1, 5, 6, 7 or 9**	➞ page 10/44
Frequency and voltage	**2 or 9**	➞ page 11/2
Gearbox mounting type	**A, D, F or H**	➞ page 10/37

© Siemens AG 2017

Selection and ordering data (continued)

P_{rated}	n_2	T_2	i	F_{R2}	f_B	m	Article No.	Order code
kW	rpm	Nm	-	N	-	kg	(Article No. supplement ➞ below)	No. of poles
0.09	**B.19-LA63ME4**							
	46	25	29.44	1 910	2.0	8	**2KJ3500 - ■ BC11 - ■ ■ V1**	
	54	21	25.06	1 910	2.4	8	**2KJ3500 - ■ BC11 - ■ ■ U1**	
	59	19	22.78	1 910	2.6	8	**2KJ3500 - ■ BC11 - ■ ■ T1**	
	68	17	19.86	1 910	3.0	8	**2KJ3500 - ■ BC11 - ■ ■ S1**	
	76	15	17.78	1 910	3.3	8	**2KJ3500 - ■ BC11 - ■ ■ R1**	
	85	13	15.79	1 910	3.7	8	**2KJ3500 - ■ BC11 - ■ ■ Q1**	
	93	12	14.57	1 910	4.0	8	**2KJ3500 - ■ BC11 - ■ ■ P1**	
	107	11	12.66	1 910	4.7	8	**2KJ3500 - ■ BC11 - ■ ■ N1**	
	123	9.3	11.00	1 910	5.4	8	**2KJ3500 - ■ BC11 - ■ ■ M1**	
	136	8.4	9.93	1 910	5.9	8	**2KJ3500 - ■ BC11 - ■ ■ L1**	
	144	7.9	9.35	1 910	6.3	8	**2KJ3500 - ■ BC11 - ■ ■ K1**	
	166	6.9	8.15	1 910	6.8	8	**2KJ3500 - ■ BC11 - ■ ■ J1**	
	172	6.7	7.87	1 910	5.7	8	**2KJ3500 - ■ BC11 - ■ ■ H1**	
	193	5.9	6.99	1 910	6.4	8	**2KJ3500 - ■ BC11 - ■ ■ G1**	
	209	5.5	6.45	1 910	7.1	8	**2KJ3500 - ■ BC11 - ■ ■ F1**	
	241	4.8	5.61	1 910	7.8	8	**2KJ3500 - ■ BC11 - ■ ■ E1**	
	277	4.1	4.87	1 910	8.5	8	**2KJ3500 - ■ BC11 - ■ ■ D1**	
	307	3.7	4.40	1 910	9.1	8	**2KJ3500 - ■ BC11 - ■ ■ C1**	
	326	3.5	4.14	1 910	9.4	8	**2KJ3500 - ■ BC11 - ■ ■ B1**	
	374	3.1	3.61	1 910	10	8	**2KJ3500 - ■ BC11 - ■ ■ A1**	
0.18	**K.79-LA71MG6**							
	3.5	490	244.25	14 400	1.7	35	**2KJ3508 - ■ CD11 - ■ ■ J2**	**P01**
	3.8	445	222.05	14 400	1.8	35	**2KJ3508 - ■ CD11 - ■ ■ H2**	**P01**
	K.69-LA71MG6							
	4.3	395	196.59	11 300	1.5	30	**2KJ3507 - ■ CD11 - ■ ■ H2**	**P01**
	4.8	360	178.72	11 400	1.7	30	**2KJ3507 - ■ CD11 - ■ ■ G2**	**P01**
	5.6	305	152.00	11 500	2.0	30	**2KJ3507 - ■ CD11 - ■ ■ F2**	**P01**
	6.2	275	138.18	11 600	2.1	30	**2KJ3507 - ■ CD11 - ■ ■ E2**	**P01**
	K.49-LA71MG6							
	4.2	405	200.25	7 940	1.0	23	**2KJ3505 - ■ CD11 - ■ ■ J2**	**P01**
	4.8	360	178.06	8 290	1.2	23	**2KJ3505 - ■ CD11 - ■ ■ H2**	**P01**
	5.4	315	156.34	8 510	1.3	23	**2KJ3505 - ■ CD11 - ■ ■ G2**	**P01**
	6.0	285	142.13	8 600	1.5	23	**2KJ3505 - ■ CD11 - ■ ■ F2**	**P01**
	K.49-LA63MF4							
	6.7	255	200.25	8 690	1.6	22	**2KJ3505 - ■ BD11 - ■ ■ J2**	
	7.6	225	178.06	8 770	1.9	22	**2KJ3505 - ■ BD11 - ■ ■ H2**	
	8.6	199	156.34	8 850	2.1	22	**2KJ3505 - ■ BD11 - ■ ■ G2**	
	K.39-LA71MG6							
	7.0	245	121.07	5 980	0.90	16	**2KJ3504 - ■ CD11 - ■ ■ G2**	**P01**
	7.7	220	110.06	6 080	0.99	16	**2KJ3504 - ■ CD11 - ■ ■ F2**	**P01**
	K.39-LA63MF4							
	8.6	200	157.32	6 150	1.1	15	**2KJ3504 - ■ BD11 - ■ ■ J2**	
	9.7	178	139.54	6 230	1.2	15	**2KJ3504 - ■ BD11 - ■ ■ H2**	
	11	154	121.07	6 320	1.4	15	**2KJ3504 - ■ BD11 - ■ ■ G2**	
	12	140	110.06	6 370	1.6	15	**2KJ3504 - ■ BD11 - ■ ■ F2**	
	14	120	94.39	6 450	1.8	15	**2KJ3504 - ■ BD11 - ■ ■ E2**	
	16	109	85.81	6 490	2.0	15	**2KJ3504 - ■ BD11 - ■ ■ D2**	
	18	96	75.24	6 530	2.3	15	**2KJ3504 - ■ BD11 - ■ ■ C2**	

Article No. supplement		
Shaft design	**1, 5, 6, 7 or 9**	➞ page 10/44
Frequency and voltage	**2 or 9**	➞ page 11/2
Gearbox mounting type	**A, D, F or H**	➞ page 10/37

© Siemens AG 2017

5

Selection and ordering data (continued)

P_{rated} kW	n_2 rpm	T_2 Nm	i -	F_{R2} N	f_B -	m kg	Article No. (Article No. supplement ➞ below)	Order code No. of poles
0.18	**B.39-LA71MG6**							
	15	114	56.36	6 980	2.2	15	**2KJ3502 - ■ CD11 - ■ ■ A2**	**P01**
	17	101	50.11	6 980	2.1	15	**2KJ3502 - ■ CD11 - ■ ■ X1**	**P01**
	B.29-LA71MG6							
	18	95	46.85	4 200	1.2	10	**2KJ3501 - ■ CD11 - ■ ■ B2**	**P01**
	20	84	41.56	4 200	1.3	10	**2KJ3501 - ■ CD11 - ■ ■ A2**	**P01**
	24	73	36.06	4 200	1.5	10	**2KJ3501 - ■ CD11 - ■ ■ X1**	**P01**
	26	66	32.78	4 200	1.7	10	**2KJ3501 - ■ CD11 - ■ ■ W1**	**P01**
	B.29-LA63MF4							
	29	60	46.85	4 200	1.8	9	**2KJ3501 - ■ BD11 - ■ ■ B2**	
	32	53	41.56	4 200	2.1	9	**2KJ3501 - ■ BD11 - ■ ■ A2**	
	37	46	36.06	4 200	2.4	9	**2KJ3501 - ■ BD11 - ■ ■ X1**	
	41	42	32.78	4 200	2.6	9	**2KJ3501 - ■ BD11 - ■ ■ W1**	
	48	36	28.11	4 200	3.1	9	**2KJ3501 - ■ BD11 - ■ ■ V1**	
	53	32	25.56	4 200	3.4	9	**2KJ3501 - ■ BD11 - ■ ■ U1**	
	60	28	22.41	4 200	3.9	9	**2KJ3501 - ■ BD11 - ■ ■ T1**	
	68	26	20.00	4 200	4.3	9	**2KJ3501 - ■ BD11 - ■ ■ S1**	
	76	23	17.82	4 200	4.8	9	**2KJ3501 - ■ BD11 - ■ ■ R1**	
	82	21	16.45	4 200	5.3	9	**2KJ3501 - ■ BD11 - ■ ■ Q1**	
	94	18	14.40	4 200	6.0	9	**2KJ3501 - ■ BD11 - ■ ■ P1**	
	107	16	12.63	4 200	6.8	9	**2KJ3501 - ■ BD11 - ■ ■ N1**	
	118	15	11.46	4 200	7.5	9	**2KJ3501 - ■ BD11 - ■ ■ M1**	
	125	14	10.78	4 200	8.0	9	**2KJ3501 - ■ BD11 - ■ ■ L1**	
	142	12	9.51	4 200	9.1	9	**2KJ3501 - ■ BD11 - ■ ■ K1**	
	164	10	8.25	4 200	10	9	**2KJ3501 - ■ BD11 - ■ ■ J1**	
	172	10	7.84	4 110	7.5	9	**2KJ3501 - ■ BD11 - ■ ■ H1**	
	183	9.4	7.38	4 040	8.0	9	**2KJ3501 - ■ BD11 - ■ ■ G1**	
	207	8.3	6.51	3 880	9.0	9	**2KJ3501 - ■ BD11 - ■ ■ F1**	
	239	7.2	5.65	3 700	10	9	**2KJ3501 - ■ BD11 - ■ ■ E1**	
	266	6.5	5.07	3 590	12	9	**2KJ3501 - ■ BD11 - ■ ■ D1**	
	282	6.1	4.78	3 520	12	9	**2KJ3501 - ■ BD11 - ■ ■ C1**	
	321	5.4	4.21	3 380	14	9	**2KJ3501 - ■ BD11 - ■ ■ B1**	
	B.19-LA71MG6							
	29	60	29.44	1 910	0.84	9	**2KJ3500 - ■ CD11 - ■ ■ V1**	**P01**
	B.19-LA63MF4							
	32	54	42.10	1 910	0.93	8	**2KJ3500 - ■ BD11 - ■ ■ A2**	
	36	48	37.28	1 910	1.1	8	**2KJ3500 - ■ BD11 - ■ ■ X1**	
	42	41	32.39	1 910	1.2	8	**2KJ3500 - ■ BD11 - ■ ■ W1**	
	46	38	29.44	1 910	1.3	8	**2KJ3500 - ■ BD11 - ■ ■ V1**	
	54	32	25.06	1 910	1.6	8	**2KJ3500 - ■ BD11 - ■ ■ U1**	
	59	29	22.78	1 910	1.7	8	**2KJ3500 - ■ BD11 - ■ ■ T1**	
	68	25	19.86	1 910	2.0	8	**2KJ3500 - ■ BD11 - ■ ■ S1**	
	76	23	17.78	1 910	2.2	8	**2KJ3500 - ■ BD11 - ■ ■ R1**	
	85	20	15.79	1 910	2.5	8	**2KJ3500 - ■ BD11 - ■ ■ Q1**	
	93	19	14.57	1 910	2.7	8	**2KJ3500 - ■ BD11 - ■ ■ P1**	
	107	16	12.66	1 910	3.1	8	**2KJ3500 - ■ BD11 - ■ ■ N1**	
	123	14	11.00	1 910	3.6	8	**2KJ3500 - ■ BD11 - ■ ■ M1**	
	136	13	9.93	1 910	4.0	8	**2KJ3500 - ■ BD11 - ■ ■ L1**	

Article No. supplement		
Shaft design	**1, 5, 6, 7 or 9**	➞ page 10/44
Frequency and voltage	**2 or 9**	➞ page 11/2
Gearbox mounting type	**A, D, F or H**	➞ page 10/37

© Siemens AG 2017

Selection and ordering data (continued)

P_{rated} kW	n_2 rpm	T_2 Nm	i -	F_{R2} N	f_B -	m kg	Article No. (Article No. supplement ➞ below)	Order code No. of poles
0.18	**B.19-LA63MF4**							
	144	12	9.35	1 910	4.2	8	**2KJ3500 - ■ BD11 - ■ ■ K1**	
	166	10	8.15	1 910	4.5	8	**2KJ3500 - ■ BD11 - ■ ■ J1**	
	172	10	7.87	1 910	3.8	8	**2KJ3500 - ■ BD11 - ■ ■ H1**	
	193	8.9	6.99	1 910	4.3	8	**2KJ3500 - ■ BD11 - ■ ■ G1**	
	209	8.2	6.45	1 910	4.7	8	**2KJ3500 - ■ BD11 - ■ ■ F1**	
	241	7.1	5.61	1 910	5.2	8	**2KJ3500 - ■ BD11 - ■ ■ E1**	
	277	6.2	4.87	1 910	5.6	8	**2KJ3500 - ■ BD11 - ■ ■ D1**	
	307	5.6	4.40	1 910	6.1	8	**2KJ3500 - ■ BD11 - ■ ■ C1**	
	326	5.3	4.14	1 910	6.3	8	**2KJ3500 - ■ BD11 - ■ ■ B1**	
	374	4.6	3.61	1 910	6.7	8	**2KJ3500 - ■ BD11 - ■ ■ A1**	
0.25	**K.79-LA71MH6**							
	3.5	675	244.25	14 200	1.2	37	**2KJ3508 - ■ CE11 - ■ ■ J2**	**P01**
	3.9	615	222.05	14 300	1.3	37	**2KJ3508 - ■ CE11 - ■ ■ H2**	**P01**
	4.6	520	188.85	14 400	1.6	37	**2KJ3508 - ■ CE11 - ■ ■ G2**	**P01**
	5.0	475	171.69	14 400	1.7	37	**2KJ3508 - ■ CE11 - ■ ■ F2**	**P01**
	K.79-LA71MG4							
	5.5	430	244.25	14 400	1.9	35	**2KJ3508 - ■ CD11 - ■ ■ J2**	
	6.1	390	222.05	14 400	2.1	35	**2KJ3508 - ■ CD11 - ■ ■ H2**	
	K.69-LA71MH6							
	4.4	545	196.59	10 900	1.1	32	**2KJ3507 - ■ CE11 - ■ ■ H2**	**P01**
	4.8	495	178.72	11 100	1.2	32	**2KJ3507 - ■ CE11 - ■ ■ G2**	**P01**
	5.7	420	152.00	11 200	1.4	32	**2KJ3507 - ■ CE11 - ■ ■ F2**	**P01**
	6.2	380	138.18	11 300	1.6	32	**2KJ3507 - ■ CE11 - ■ ■ E2**	**P01**
	K.69-LA71MG4							
	6.9	345	196.59	11 400	1.7	30	**2KJ3507 - ■ CD11 - ■ ■ H2**	
	7.6	315	178.72	11 500	1.9	30	**2KJ3507 - ■ CD11 - ■ ■ G2**	
	K.49-LA71MH6							
	4.8	490	178.06	7 270	0.85	25	**2KJ3505 - ■ CE11 - ■ ■ H2**	**P01**
	5.5	430	156.34	7 740	0.97	25	**2KJ3505 - ■ CE11 - ■ ■ G2**	**P01**
	6.1	395	142.13	8 020	1.1	25	**2KJ3505 - ■ CE11 - ■ ■ F2**	**P01**
	K.49-LA71MG4							
	6.7	350	200.25	8 370	1.2	23	**2KJ3505 - ■ CD11 - ■ ■ J2**	
	7.6	315	178.06	8 510	1.3	23	**2KJ3505 - ■ CD11 - ■ ■ H2**	
	8.6	275	156.34	8 630	1.5	23	**2KJ3505 - ■ CD11 - ■ ■ G2**	
	9.5	250	142.13	8 700	1.7	23	**2KJ3505 - ■ CD11 - ■ ■ F2**	
	11	215	121.60	8 800	2.0	23	**2KJ3505 - ■ CD11 - ■ ■ E2**	
	12	196	110.55	8 860	2.1	23	**2KJ3505 - ■ CD11 - ■ ■ D2**	
	K.39-LA71MG4							
	9.7	245	139.54	5 980	0.89	16	**2KJ3504 - ■ CD11 - ■ ■ H2**	
	11	210	121.07	6 110	1.0	16	**2KJ3504 - ■ CD11 - ■ ■ G2**	
	12	195	110.06	6 170	1.1	16	**2KJ3504 - ■ CD11 - ■ ■ F2**	
	14	167	94.39	6 270	1.3	16	**2KJ3504 - ■ CD11 - ■ ■ E2**	
	16	152	85.81	6 330	1.4	16	**2KJ3504 - ■ CD11 - ■ ■ D2**	
	18	133	75.24	6 400	1.7	16	**2KJ3504 - ■ CD11 - ■ ■ C2**	
	20	119	67.16	6 450	1.9	16	**2KJ3504 - ■ CD11 - ■ ■ B2**	
	23	106	59.85	6 500	2.1	16	**2KJ3504 - ■ CD11 - ■ ■ A2**	
	24	98	55.25	6 530	2.3	16	**2KJ3504 - ■ CD11 - ■ ■ X1**	

Article No. supplement		
Shaft design	**1, 5, 6, 7 or 9**	➞ page 10/44
Frequency and voltage	**2 or 9**	➞ page 11/2
Gearbox mounting type	**A, D, F or H**	➞ page 10/37

© Siemens AG 2017

Selection and ordering data (continued)

P_{rated}	n_2	T_2	i	F_{R2}	f_B	m	Article No.	Order code
kW	rpm	Nm	-	N	-	kg	(Article No. supplement ➞ below)	No. of poles
0.25	**B.39-LA71MH6**							
	15	156	56.36	6 980	1.6	17	**2KJ3502 - ■ CE11 - ■ ■ A2**	**P01**
	17	139	50.11	6 980	1.5	17	**2KJ3502 - ■ CE11 - ■ ■ X1**	**P01**
	20	122	44.00	6 980	2.0	17	**2KJ3502 - ■ CE11 - ■ ■ W1**	**P01**
	22	111	40.00	6 980	2.1	17	**2KJ3502 - ■ CE11 - ■ ■ V1**	**P01**
	B.39-LA71MG4							
	27	89	50.11	6 980	2.4	15	**2KJ3502 - ■ CD11 - ■ ■ X1**	
	B.29-LA71MH6							
	18	130	46.85	4 030	0.85	12	**2KJ3501 - ■ CE11 - ■ ■ B2**	**P01**
	21	115	41.56	4 110	0.95	12	**2KJ3501 - ■ CE11 - ■ ■ A2**	**P01**
	24	100	36.06	4 190	1.1	12	**2KJ3501 - ■ CE11 - ■ ■ X1**	**P01**
	26	91	32.78	4 200	1.2	12	**2KJ3501 - ■ CE11 - ■ ■ W1**	**P01**
	B.29-LA71MG4							
	29	83	46.85	4 200	1.3	10	**2KJ3501 - ■ CD11 - ■ ■ B2**	
	32	74	41.56	4 200	1.5	10	**2KJ3501 - ■ CD11 - ■ ■ A2**	
	37	64	36.06	4 200	1.7	10	**2KJ3501 - ■ CD11 - ■ ■ X1**	
	41	58	32.78	4 200	1.9	10	**2KJ3501 - ■ CD11 - ■ ■ W1**	
	48	50	28.11	4 200	2.2	10	**2KJ3501 - ■ CD11 - ■ ■ V1**	
	53	45	25.56	4 200	2.4	10	**2KJ3501 - ■ CD11 - ■ ■ U1**	
	60	40	22.41	4 200	2.8	10	**2KJ3501 - ■ CD11 - ■ ■ T1**	
	68	35	20.00	4 200	3.1	10	**2KJ3501 - ■ CD11 - ■ ■ S1**	
	76	32	17.82	4 200	3.5	10	**2KJ3501 - ■ CD11 - ■ ■ R1**	
	82	29	16.45	4 200	3.8	10	**2KJ3501 - ■ CD11 - ■ ■ Q1**	
	94	26	14.40	4 200	4.3	10	**2KJ3501 - ■ CD11 - ■ ■ P1**	
	107	22	12.63	4 200	4.9	10	**2KJ3501 - ■ CD11 - ■ ■ N1**	
	118	20	11.46	4 200	5.4	10	**2KJ3501 - ■ CD11 - ■ ■ M1**	
	125	19	10.78	4 200	5.8	10	**2KJ3501 - ■ CD11 - ■ ■ L1**	
	142	17	9.51	4 200	6.5	10	**2KJ3501 - ■ CD11 - ■ ■ K1**	
	164	15	8.25	4 150	7.5	10	**2KJ3501 - ■ CD11 - ■ ■ J1**	
	172	14	7.84	4 070	5.4	10	**2KJ3501 - ■ CD11 - ■ ■ H1**	
	183	13	7.38	4 000	5.7	10	**2KJ3501 - ■ CD11 - ■ ■ G1**	
	207	12	6.51	3 840	6.5	10	**2KJ3501 - ■ CD11 - ■ ■ F1**	
	239	10	5.65	3 680	7.5	10	**2KJ3501 - ■ CD11 - ■ ■ E1**	
	266	9	5.07	3 570	8.3	10	**2KJ3501 - ■ CD11 - ■ ■ D1**	
	282	8.5	4.78	3 500	8.8	10	**2KJ3501 - ■ CD11 - ■ ■ C1**	
	321	7.4	4.21	3 360	9.9	10	**2KJ3501 - ■ CD11 - ■ ■ B1**	
	370	6.5	3.65	3 210	11	10	**2KJ3501 - ■ CD11 - ■ ■ A1**	
	B.19-LA71MG4							
	42	57	32.39	1 910	0.87	9	**2KJ3500 - ■ CD11 - ■ ■ W1**	
	46	52	29.44	1 910	0.96	9	**2KJ3500 - ■ CD11 - ■ ■ V1**	
	54	44	25.06	1 910	1.1	9	**2KJ3500 - ■ CD11 - ■ ■ U1**	
	59	40	22.78	1 910	1.2	9	**2KJ3500 - ■ CD11 - ■ ■ T1**	
	68	35	19.86	1 910	1.4	9	**2KJ3500 - ■ CD11 - ■ ■ S1**	
	76	31	17.78	1 910	1.6	9	**2KJ3500 - ■ CD11 - ■ ■ R1**	
	85	28	15.79	1 910	1.8	9	**2KJ3500 - ■ CD11 - ■ ■ Q1**	
	93	26	14.57	1 910	1.9	9	**2KJ3500 - ■ CD11 - ■ ■ P1**	
	107	22	12.66	1 910	2.2	9	**2KJ3500 - ■ CD11 - ■ ■ N1**	
	123	20	11.00	1 910	2.6	9	**2KJ3500 - ■ CD11 - ■ ■ M1**	

Article No. supplement		
Shaft design	**1, 5, 6, 7 or 9**	➞ page 10/44
Frequency and voltage	**2 or 9**	➞ page 11/2
Gearbox mounting type	**A, D, F or H**	➞ page 10/37

© Siemens AG 2017

Selection and ordering data (continued)

P_{rated} kW	n_2 rpm	T_2 Nm	i -	F_{R2} N	f_B -	m kg	Article No. (Article No. supplement ➞ below)	Order code No. of poles
0.25	**B.19-LA71MG4**							
	136	18	9.93	1 910	2.8	9	**2KJ3500 - ■ CD11 - ■ ■ L1**	
	144	16	9.35	1 910	3.0	9	**2KJ3500 - ■ CD11 - ■ ■ K1**	
	166	14	8.15	1 910	3.3	9	**2KJ3500 - ■ CD11 - ■ ■ J1**	
	172	14	7.87	1 910	2.7	9	**2KJ3500 - ■ CD11 - ■ ■ H1**	
	193	12	6.99	1 910	3.1	9	**2KJ3500 - ■ CD11 - ■ ■ G1**	
	209	11	6.45	1 910	3.4	9	**2KJ3500 - ■ CD11 - ■ ■ F1**	
	241	9.9	5.61	1 910	3.7	9	**2KJ3500 - ■ CD11 - ■ ■ E1**	
	277	8.6	4.87	1 910	4.1	9	**2KJ3500 - ■ CD11 - ■ ■ D1**	
	307	7.8	4.40	1 910	4.4	9	**2KJ3500 - ■ CD11 - ■ ■ C1**	
	326	7.3	4.14	1 910	4.5	9	**2KJ3500 - ■ CD11 - ■ ■ B1**	
	374	6.4	3.61	1 910	4.9	9	**2KJ3500 - ■ CD11 - ■ ■ A1**	
0.37	**K.79-LA71MH4**							
	5.6	630	244.25	14 300	1.3	37	**2KJ3508 - ■ CE11 - ■ ■ J2**	
	6.2	570	222.05	14 400	1.4	37	**2KJ3508 - ■ CE11 - ■ ■ H2**	
	7.3	485	188.85	14 400	1.7	37	**2KJ3508 - ■ CE11 - ■ ■ G2**	
	8.0	440	171.69	14 400	1.9	37	**2KJ3508 - ■ CE11 - ■ ■ F2**	
	8.9	395	153.18	14 400	2.1	37	**2KJ3508 - ■ CE11 - ■ ■ E2**	
	K.69-LA71MH4							
	7.0	505	196.59	11 000	1.2	32	**2KJ3507 - ■ CE11 - ■ ■ H2**	
	7.7	460	178.72	11 100	1.3	32	**2KJ3507 - ■ CE11 - ■ ■ G2**	
	9.0	390	152.00	11 300	1.5	32	**2KJ3507 - ■ CE11 - ■ ■ F2**	
	9.9	355	138.18	11 400	1.7	32	**2KJ3507 - ■ CE11 - ■ ■ E2**	
	11	315	123.29	11 500	1.9	32	**2KJ3507 - ■ CE11 - ■ ■ D2**	
	12	285	110.55	11 600	2.1	32	**2KJ3507 - ■ CE11 - ■ ■ C2**	
	6.1	515	225.26	7 080	0.82	27	**2KJ3522 - ■ CE11 - ■ ■ B1**	
	6.5	485	212.01	7 310	0.87	27	**2KJ3522 - ■ CE11 - ■ ■ A1**	
	K.49-LA71MH4							
	6.8	515	200.25	7 080	0.81	25	**2KJ3505 - ■ CE11 - ■ ■ J2**	
	7.7	455	178.06	7 550	0.91	25	**2KJ3505 - ■ CE11 - ■ ■ H2**	
	8.8	400	156.34	7 980	1.0	25	**2KJ3505 - ■ CE11 - ■ ■ G2**	
	9.6	365	142.13	8 250	1.1	25	**2KJ3505 - ■ CE11 - ■ ■ F2**	
	11	310	121.60	8 530	1.3	25	**2KJ3505 - ■ CE11 - ■ ■ E2**	
	12	285	110.55	8 600	1.5	25	**2KJ3505 - ■ CE11 - ■ ■ D2**	
	14	250	97.71	8 700	1.7	25	**2KJ3505 - ■ CE11 - ■ ■ C2**	
	15	225	88.83	8 770	1.8	25	**2KJ3505 - ■ CE11 - ■ ■ B2**	
	18	200	77.81	8 820	2.1	25	**2KJ3505 - ■ CE11 - ■ ■ A2**	
	19	185	71.82	8 670	2.3	25	**2KJ3505 - ■ CE11 - ■ ■ X1**	
	K.39-LA71MH4							
	15	240	94.39	6 000	0.90	17	**2KJ3504 - ■ CE11 - ■ ■ E2**	
	16	220	85.81	6 080	0.99	17	**2KJ3504 - ■ CE11 - ■ ■ D2**	
	18	194	75.24	6 170	1.1	17	**2KJ3504 - ■ CE11 - ■ ■ C2**	
	20	173	67.16	6 250	1.3	17	**2KJ3504 - ■ CE11 - ■ ■ B2**	
	23	154	59.85	6 320	1.4	17	**2KJ3504 - ■ CE11 - ■ ■ A2**	
	25	143	55.25	6 360	1.5	17	**2KJ3504 - ■ CE11 - ■ ■ X1**	
	28	125	48.37	6 430	1.8	17	**2KJ3504 - ■ CE11 - ■ ■ W1**	
	32	109	42.41	6 490	2.0	17	**2KJ3504 - ■ CE11 - ■ ■ V1**	
	36	99	38.48	6 530	2.2	17	**2KJ3504 - ■ CE11 - ■ ■ U1**	

Article No. supplement		
Shaft design	**1, 5, 6, 7 or 9**	➞ page 10/44
Frequency and voltage	**2 or 9**	➞ page 11/2
Gearbox mounting type	**A, D, F or H**	➞ page 10/37

© Siemens AG 2017

Selection and ordering data (continued)

P_{rated} kW	n_2 rpm	T_2 Nm	i -	F_{R2} N	f_B -	m kg	Article No. (Article No. supplement ➞ below)	Order code No. of poles
0.37	**K.39-LA71MH4**							
	38	93	36.21	6 530	2.4	17	**2KJ3504 - ■ CE11 - ■ ■ T1**	
	43	82	31.92	6 470	2.7	17	**2KJ3504 - ■ CE11 - ■ ■ S1**	
	B.39-LA71MH4							
	24	145	56.36	6 980	1.7	17	**2KJ3502 - ■ CE11 - ■ ■ A2**	
	27	129	50.11	6 980	1.6	17	**2KJ3502 - ■ CE11 - ■ ■ X1**	
	31	113	44.00	6 980	2.2	17	**2KJ3502 - ■ CE11 - ■ ■ W1**	
	34	103	40.00	6 980	2.2	17	**2KJ3502 - ■ CE11 - ■ ■ V1**	
	B.29-LA71MH4							
	29	121	46.85	4 080	0.91	12	**2KJ3501 - ■ CE11 - ■ ■ B2**	
	33	107	41.56	4 150	1.0	12	**2KJ3501 - ■ CE11 - ■ ■ A2**	
	38	93	36.06	4 200	1.2	12	**2KJ3501 - ■ CE11 - ■ ■ X1**	
	42	84	32.78	4 200	1.3	12	**2KJ3501 - ■ CE11 - ■ ■ W1**	
	49	72	28.11	4 200	1.5	12	**2KJ3501 - ■ CE11 - ■ ■ V1**	
	54	66	25.56	4 200	1.7	12	**2KJ3501 - ■ CE11 - ■ ■ U1**	
	61	58	22.41	4 200	1.9	12	**2KJ3501 - ■ CE11 - ■ ■ T1**	
	68	52	20.00	4 200	2.1	12	**2KJ3501 - ■ CE11 - ■ ■ S1**	
	77	46	17.82	4 200	2.4	12	**2KJ3501 - ■ CE11 - ■ ■ R1**	
	83	42	16.45	4 200	2.6	12	**2KJ3501 - ■ CE11 - ■ ■ Q1**	
	95	37	14.40	4 200	3.0	12	**2KJ3501 - ■ CE11 - ■ ■ P1**	
	108	33	12.63	4 200	3.4	12	**2KJ3501 - ■ CE11 - ■ ■ N1**	
	120	30	11.46	4 200	3.7	12	**2KJ3501 - ■ CE11 - ■ ■ M1**	
	127	28	10.78	4 200	4.0	12	**2KJ3501 - ■ CE11 - ■ ■ L1**	
	144	24	9.51	4 200	4.5	12	**2KJ3501 - ■ CE11 - ■ ■ K1**	
	166	21	8.25	4 070	5.2	12	**2KJ3501 - ■ CE11 - ■ ■ J1**	
	175	20	7.84	3 990	3.7	12	**2KJ3501 - ■ CE11 - ■ ■ H1**	
	186	19	7.38	3 920	3.9	12	**2KJ3501 - ■ CE11 - ■ ■ G1**	
	210	17	6.51	3 770	4.5	12	**2KJ3501 - ■ CE11 - ■ ■ F1**	
	242	15	5.65	3 610	5.1	12	**2KJ3501 - ■ CE11 - ■ ■ E1**	
	270	13	5.07	3 510	5.7	12	**2KJ3501 - ■ CE11 - ■ ■ D1**	
	287	12	4.78	3 450	6.0	12	**2KJ3501 - ■ CE11 - ■ ■ C1**	
	325	11	4.21	3 310	6.8	12	**2KJ3501 - ■ CE11 - ■ ■ B1**	
	375	9.4	3.65	3 170	7.8	12	**2KJ3501 - ■ CE11 - ■ ■ A1**	
	B.19-LA71MH4							
	60	59	22.78	1 910	0.85	10	**2KJ3500 - ■ CE11 - ■ ■ T1**	
	69	51	19.86	1 910	0.98	10	**2KJ3500 - ■ CE11 - ■ ■ S1**	
	77	46	17.78	1 910	1.1	10	**2KJ3500 - ■ CE11 - ■ ■ R1**	
	87	41	15.79	1 910	1.2	10	**2KJ3500 - ■ CE11 - ■ ■ Q1**	
	94	38	14.57	1 910	1.3	10	**2KJ3500 - ■ CE11 - ■ ■ P1**	
	108	33	12.66	1 910	1.5	10	**2KJ3500 - ■ CE11 - ■ ■ N1**	
	125	28	11.00	1 910	1.8	10	**2KJ3500 - ■ CE11 - ■ ■ M1**	
	138	26	9.93	1 910	2.0	10	**2KJ3500 - ■ CE11 - ■ ■ L1**	
	147	24	9.35	1 910	2.1	10	**2KJ3500 - ■ CE11 - ■ ■ K1**	
	168	21	8.15	1 910	2.2	10	**2KJ3500 - ■ CE11 - ■ ■ J1**	
	174	20	7.87	1 910	1.9	10	**2KJ3500 - ■ CE11 - ■ ■ H1**	
	196	18	6.99	1 910	2.1	10	**2KJ3500 - ■ CE11 - ■ ■ G1**	
	212	17	6.45	1 910	2.3	10	**2KJ3500 - ■ CE11 - ■ ■ F1**	
	244	14	5.61	1 910	2.6	10	**2KJ3500 - ■ CE11 - ■ ■ E1**	

Article No. supplement		
Shaft design	**1, 5, 6, 7 or 9**	➞ page 10/44
Frequency and voltage	**2 or 9**	➞ page 11/2
Gearbox mounting type	**A, D, F or H**	➞ page 10/37

© Siemens AG 2017

Selection and ordering data (continued)

P_{rated}	n_2	T_2	i	F_{R2}	f_B	m	Article No.	Order code
kW	rpm	Nm	-	N	-	kg	(Article No. supplement ➞ below)	No. of poles
0.37	**B.19-LA71MH4**							
	281	13	4.87	1 910	2.8	10	**2KJ3500 - ■ CE11 - ■ ■ D1**	
	311	11	4.40	1 910	3.0	10	**2KJ3500 - ■ CE11 - ■ ■ C1**	
	331	11	4.14	1 910	3.1	10	**2KJ3500 - ■ CE11 - ■ ■ B1**	
	380	9.3	3.61	1 910	3.3	10	**2KJ3500 - ■ CE11 - ■ ■ A1**	
0.55	**K.89-LA71ZML4**							
	5.9	885	231.80	18 100	1.8	58	**2KJ3510 - ■ CH11 - ■ ■ K2**	
	6.5	805	210.72	18 100	2.0	58	**2KJ3510 - ■ CH11 - ■ ■ J2**	
	K.89-LE80MB4							
	6.2	845	231.80	18 100	1.9	60	**2KJ3510 - ■ DB21 - ■ ■ K2**	
	6.8	765	210.72	18 100	2.1	60	**2KJ3510 - ■ DB21 - ■ ■ J2**	
	K.79-LA71ZML4							
	5.6	935	244.25	13 700	0.88	37	**2KJ3508 - ■ CH11 - ■ ■ J2**	
	6.2	850	222.05	13 900	0.96	37	**2KJ3508 - ■ CH11 - ■ ■ H2**	
	7.3	720	188.85	14 100	1.1	37	**2KJ3508 - ■ CH11 - ■ ■ G2**	
	8.0	655	171.69	14 300	1.2	37	**2KJ3508 - ■ CH11 - ■ ■ F2**	
	8.9	585	153.18	14 400	1.4	37	**2KJ3508 - ■ CH11 - ■ ■ E2**	
	10	525	137.35	14 400	1.6	37	**2KJ3508 - ■ CH11 - ■ ■ D2**	
	11	475	123.80	14 400	1.7	37	**2KJ3508 - ■ CH11 - ■ ■ C2**	
	12	435	114.28	14 400	1.9	37	**2KJ3508 - ■ CH11 - ■ ■ B2**	
	13	400	104.32	14 400	2.1	37	**2KJ3508 - ■ CH11 - ■ ■ A2**	
	K.79-LE80MB4							
	5.9	890	244.25	13 800	0.92	39	**2KJ3508 - ■ DB21 - ■ ■ J2**	
	6.5	810	222.05	13 900	1.0	39	**2KJ3508 - ■ DB21 - ■ ■ H2**	
	7.6	685	188.85	14 200	1.2	39	**2KJ3508 - ■ DB21 - ■ ■ G2**	
	8.4	625	171.69	14 300	1.3	39	**2KJ3508 - ■ DB21 - ■ ■ F2**	
	9.4	555	153.18	14 400	1.5	39	**2KJ3508 - ■ DB21 - ■ ■ E2**	
	10	500	137.35	14 400	1.6	39	**2KJ3508 - ■ DB21 - ■ ■ D2**	
	12	450	123.80	14 400	1.8	39	**2KJ3508 - ■ DB21 - ■ ■ C2**	
	13	415	114.28	14 400	2.0	39	**2KJ3508 - ■ DB21 - ■ ■ B2**	
	14	380	104.32	14 400	2.2	39	**2KJ3508 - ■ DB21 - ■ ■ A2**	
	K.69-LA71ZML4							
	7.0	750	196.59	9 880	0.80	32	**2KJ3507 - ■ CH11 - ■ ■ H2**	
	7.7	685	178.72	10 300	0.88	32	**2KJ3507 - ■ CH11 - ■ ■ G2**	
	9.0	580	152.00	10 900	1.0	32	**2KJ3507 - ■ CH11 - ■ ■ F2**	
	9.9	530	138.18	11 000	1.1	32	**2KJ3507 - ■ CH11 - ■ ■ E2**	
	11	470	123.29	11 100	1.3	32	**2KJ3507 - ■ CH11 - ■ ■ D2**	
	12	420	110.55	11 200	1.4	32	**2KJ3507 - ■ CH11 - ■ ■ C2**	
	14	380	99.64	11 300	1.6	32	**2KJ3507 - ■ CH11 - ■ ■ B2**	
	15	350	91.98	11 400	1.7	32	**2KJ3507 - ■ CH11 - ■ ■ A2**	
	16	320	83.96	11 500	1.9	32	**2KJ3507 - ■ CH11 - ■ ■ X1**	
	20	265	69.67	11 600	2.2	32	**2KJ3507 - ■ CH11 - ■ ■ W1**	
	21	250	65.57	11 600	2.4	32	**2KJ3507 - ■ CH11 - ■ ■ V1**	
	K.69-LE80MB4							
	7.3	715	196.59	10 100	0.84	34	**2KJ3507 - ■ DB21 - ■ ■ H2**	
	8.1	650	178.72	10 500	0.92	34	**2KJ3507 - ■ DB21 - ■ ■ G2**	
	9.5	550	152.00	10 900	1.1	34	**2KJ3507 - ■ DB21 - ■ ■ F2**	
	10	500	138.18	11 000	1.2	34	**2KJ3507 - ■ DB21 - ■ ■ E2**	

Article No. supplement		
Shaft design	**1, 5, 6, 7 or 9**	➞ page 10/44
Frequency and voltage	**2 or 9**	➞ page 11/2
Gearbox mounting type	**A, D, F or H**	➞ page 10/37

© Siemens AG 2017

5

Selection and ordering data (continued)

P_{rated} kW	n_2 rpm	T_2 Nm	i -	F_{R2} N	f_B -	m kg	Article No. (Article No. supplement ➞ below)	Order code No. of poles
0.55	**K.69-LE80MB4**							
	12	450	123.29	11 200	1.3	34	**2KJ3507 - ■ DB21 - ■ ■ D2**	
	13	400	110.55	11 300	1.5	34	**2KJ3507 - ■ DB21 - ■ ■ C2**	
	14	360	99.64	11 400	1.7	34	**2KJ3507 - ■ DB21 - ■ ■ B2**	
	16	335	91.98	11 400	1.8	34	**2KJ3507 - ■ DB21 - ■ ■ A2**	
	17	305	83.96	11 500	2	34	**2KJ3507 - ■ DB21 - ■ ■ X1**	
	21	250	69.67	11 600	2.4	34	**2KJ3507 - ■ DB21 - ■ ■ W1**	
	K.49-LA71ZML4							
	11	465	121.60	7 470	0.90	25	**2KJ3505 - ■ CH11 - ■ ■ E2**	
	12	420	110.55	7 820	0.99	25	**2KJ3505 - ■ CH11 - ■ ■ D2**	
	14	375	97.71	8 170	1.1	25	**2KJ3505 - ■ CH11 - ■ ■ C2**	
	15	340	88.83	8 200	1.2	25	**2KJ3505 - ■ CH11 - ■ ■ B2**	
	18	295	77.81	8 080	1.4	25	**2KJ3505 - ■ CH11 - ■ ■ A2**	
	19	275	71.82	7 960	1.5	25	**2KJ3505 - ■ CH11 - ■ ■ X1**	
	22	240	63.59	7 840	1.7	25	**2KJ3505 - ■ CH11 - ■ ■ W1**	
	26	200	52.93	7 570	2.1	25	**2KJ3505 - ■ CH11 - ■ ■ V1**	
	27	191	49.82	7 460	2.2	25	**2KJ3505 - ■ CH11 - ■ ■ U1**	
	31	171	44.63	7 290	2.5	25	**2KJ3505 - ■ CH11 - ■ ■ T1**	
	K.49-LE80MB4							
	10	515	142.13	7 080	0.81	27	**2KJ3505 - ■ DB21 - ■ ■ F2**	
	12	440	121.60	7 670	0.95	27	**2KJ3505 - ■ DB21 - ■ ■ E2**	
	13	400	110.55	7 980	1.0	27	**2KJ3505 - ■ DB21 - ■ ■ D2**	
	15	355	97.71	8 250	1.2	27	**2KJ3505 - ■ DB21 - ■ ■ C2**	
	16	320	88.83	8 180	1.3	27	**2KJ3505 - ■ DB21 - ■ ■ B2**	
	19	280	77.81	8 030	1.5	27	**2KJ3505 - ■ DB21 - ■ ■ A2**	
	20	260	71.82	7 910	1.6	27	**2KJ3505 - ■ DB21 - ■ ■ X1**	
	23	230	63.59	7 750	1.8	27	**2KJ3505 - ■ DB21 - ■ ■ W1**	
	27	193	52.93	7 470	2.2	27	**2KJ3505 - ■ DB21 - ■ ■ V1**	
	29	182	49.82	7 380	2.3	27	**2KJ3505 - ■ DB21 - ■ ■ U1**	
	B.49-LE80MB4							
	24	215	59.28	11 100	2.1	25	**2KJ3503 - ■ DB21 - ■ ■ C2**	
	27	197	53.89	10 800	2.3	25	**2KJ3503 - ■ DB21 - ■ ■ B2**	
	B.49-LA71ZML4							
	23	225	59.28	11 200	2.0	23	**2KJ3503 - ■ CH11 - ■ ■ C2**	
	25	205	53.89	10 900	2.2	23	**2KJ3503 - ■ CH11 - ■ ■ B2**	
	K.39-LE80MB4							
	19	270	75.24	5 890	0.80	20	**2KJ3504 - ■ DB21 - ■ ■ C2**	
	21	245	67.16	5 980	0.90	20	**2KJ3504 - ■ DB21 - ■ ■ B2**	
	24	215	59.85	6 100	1.0	20	**2KJ3504 - ■ DB21 - ■ ■ A2**	
	26	200	55.25	6 150	1.1	20	**2KJ3504 - ■ DB21 - ■ ■ X1**	
	30	176	48.37	6 240	1.2	20	**2KJ3504 - ■ DB21 - ■ ■ W1**	
	34	155	42.41	6 320	1.4	20	**2KJ3504 - ■ DB21 - ■ ■ V1**	
	37	140	38.48	6 280	1.6	20	**2KJ3504 - ■ DB21 - ■ ■ U1**	
	40	132	36.21	6 210	1.7	20	**2KJ3504 - ■ DB21 - ■ ■ T1**	
	45	116	31.92	6 050	1.9	20	**2KJ3504 - ■ DB21 - ■ ■ S1**	
	52	101	27.70	5 850	2.2	20	**2KJ3504 - ■ DB21 - ■ ■ R1**	
	54	98	26.89	5 810	2.2	20	**2KJ3504 - ■ DB21 - ■ ■ Q1**	
	60	87	23.97	5 660	2.5	20	**2KJ3504 - ■ DB21 - ■ ■ P1**	

Article No. supplement		
Shaft design	**1, 5, 6, 7 or 9**	➞ page 10/44
Frequency and voltage	**2 or 9**	➞ page 11/2
Gearbox mounting type	**A, D, F or H**	➞ page 10/37

© Siemens AG 2017

Selection and ordering data (continued)

P_{rated}	n_2	T_2	i	F_{R2}	f_B	m	Article No.	Order code
kW	rpm	Nm	-	N	-	kg	(Article No. supplement ➞ below)	No. of poles
0.55	**K.39-LE80MB4**							
	65	81	22.12	5 550	2.7	20	**2KJ3504 - ■ DB21 - ■ ■ N1**	
	74	71	19.37	5 360	3.1	20	**2KJ3504 - ■ DB21 - ■ ■ M1**	
	K.39-LA71ZML4							
	20	255	67.16	5 950	0.85	17	**2KJ3504 - ■ CH11 - ■ ■ B2**	
	23	225	59.85	6 060	0.96	17	**2KJ3504 - ■ CH11 - ■ ■ A2**	
	25	210	55.25	6 110	1.0	17	**2KJ3504 - ■ CH11 - ■ ■ X1**	
	28	185	48.37	6 210	1.2	17	**2KJ3504 - ■ CH11 - ■ ■ W1**	
	32	163	42.41	6 290	1.4	17	**2KJ3504 - ■ CH11 - ■ ■ V1**	
	36	148	38.48	6 340	1.5	17	**2KJ3504 - ■ CH11 - ■ ■ U1**	
	38	139	36.21	6 270	1.6	17	**2KJ3504 - ■ CH11 - ■ ■ T1**	
	43	122	31.92	6 110	1.8	17	**2KJ3504 - ■ CH11 - ■ ■ S1**	
	49	106	27.70	5 920	2.1	17	**2KJ3504 - ■ CH11 - ■ ■ R1**	
	51	103	26.89	5 880	2.1	17	**2KJ3504 - ■ CH11 - ■ ■ Q1**	
	57	92	23.97	5 720	2.4	17	**2KJ3504 - ■ CH11 - ■ ■ P1**	
	62	85	22.12	5 610	2.6	17	**2KJ3504 - ■ CH11 - ■ ■ N1**	
	71	74	19.37	5 440	3.0	17	**2KJ3504 - ■ CH11 - ■ ■ M1**	
	B.39-LE80MB4							
	29	183	50.11	6 980	1.1	19	**2KJ3502 - ■ DB21 - ■ ■ X1**	
	33	160	44.00	6 980	1.6	19	**2KJ3502 - ■ DB21 - ■ ■ W1**	
	36	146	40.00	6 980	1.6	19	**2KJ3502 - ■ DB21 - ■ ■ V1**	
	42	125	34.22	6 980	2.0	19	**2KJ3502 - ■ DB21 - ■ ■ U1**	
	46	113	31.11	6 980	2.2	19	**2KJ3502 - ■ DB21 - ■ ■ T1**	
	52	100	27.50	6 980	2.5	19	**2KJ3502 - ■ DB21 - ■ ■ S1**	
	58	91	25.00	6 980	2.7	19	**2KJ3502 - ■ DB21 - ■ ■ R1**	
	66	80	21.90	6 980	3.1	19	**2KJ3502 - ■ DB21 - ■ ■ Q1**	
	B.39-LA71ZML4							
	24	215	56.36	6 980	1.2	17	**2KJ3502 - ■ CH11 - ■ ■ A2**	
	27	192	50.11	6 980	1.1	17	**2KJ3502 - ■ CH11 - ■ ■ X1**	
	31	169	44.00	6 980	1.5	17	**2KJ3502 - ■ CH11 - ■ ■ W1**	
	34	153	40.00	6 980	1.5	17	**2KJ3502 - ■ CH11 - ■ ■ V1**	
	40	131	34.22	6 980	1.9	17	**2KJ3502 - ■ CH11 - ■ ■ U1**	
	44	119	31.11	6 980	2.1	17	**2KJ3502 - ■ CH11 - ■ ■ T1**	
	50	105	27.50	6 980	2.4	17	**2KJ3502 - ■ CH11 - ■ ■ S1**	
	55	96	25.00	6 980	2.6	17	**2KJ3502 - ■ CH11 - ■ ■ R1**	
	63	84	21.90	6 980	3.0	17	**2KJ3502 - ■ CH11 - ■ ■ Q1**	
	B.29-LE80MB4							
	40	132	36.06	4 020	0.84	14	**2KJ3501 - ■ DB21 - ■ ■ X1**	
	44	120	32.78	4 080	0.92	14	**2KJ3501 - ■ DB21 - ■ ■ W1**	
	51	103	28.11	4 170	1.1	14	**2KJ3501 - ■ DB21 - ■ ■ V1**	
	56	93	25.56	4 200	1.2	14	**2KJ3501 - ■ DB21 - ■ ■ U1**	
	64	82	22.41	4 200	1.3	14	**2KJ3501 - ■ DB21 - ■ ■ T1**	
	72	73	20.00	4 200	1.5	14	**2KJ3501 - ■ DB21 - ■ ■ S1**	
	81	65	17.82	4 200	1.7	14	**2KJ3501 - ■ DB21 - ■ ■ R1**	
	88	60	16.45	4 200	1.8	14	**2KJ3501 - ■ DB21 - ■ ■ Q1**	
	100	52	14.40	4 200	2.1	14	**2KJ3501 - ■ DB21 - ■ ■ P1**	
	114	46	12.63	4 200	2.4	14	**2KJ3501 - ■ DB21 - ■ ■ N1**	
	126	42	11.46	4 200	2.6	14	**2KJ3501 - ■ DB21 - ■ ■ M1**	

Article No. supplement		
Shaft design	**1, 5, 6, 7 or 9**	➞ page 10/44
Frequency and voltage	**2 or 9**	➞ page 11/2
Gearbox mounting type	**A, D, F or H**	➞ page 10/37

© Siemens AG 2017

5

Selection and ordering data (continued)

P_{rated} kW	n_2 rpm	T_2 Nm	i -	F_{R2} N	f_B -	m kg	Article No. (Article No. supplement ➞ below)	Order code No. of poles
0.55	**B.29-LE80MB4**							
	134	39	10.78	4 200	2.8	14	**2KJ3501 - ■ DB21 - ■ ■ L1**	
	151	35	9.51	4 070	3.2	14	**2KJ3501 - ■ DB21 - ■ ■ K1**	
	175	30	8.25	3 920	3.7	14	**2KJ3501 - ■ DB21 - ■ ■ J1**	
	184	29	7.84	3 830	2.6	14	**2KJ3501 - ■ DB21 - ■ ■ H1**	
	195	27	7.38	3 770	2.8	14	**2KJ3501 - ■ DB21 - ■ ■ G1**	
	221	24	6.51	3 630	3.2	14	**2KJ3501 - ■ DB21 - ■ ■ F1**	
	255	21	5.65	3 480	3.6	14	**2KJ3501 - ■ DB21 - ■ ■ E1**	
	284	18	5.07	3 410	4.0	14	**2KJ3501 - ■ DB21 - ■ ■ D1**	
	301	17	4.78	3 340	4.2	14	**2KJ3501 - ■ DB21 - ■ ■ C1**	
	342	15	4.21	3 220	4.8	14	**2KJ3501 - ■ DB21 - ■ ■ B1**	
	B.29-LA71ZML4							
	38	138	36.06	3 990	0.80	12	**2KJ3501 - ■ CH11 - ■ ■ X1**	
	42	126	32.78	4 050	0.88	12	**2KJ3501 - ■ CH11 - ■ ■ W1**	
	49	108	28.11	4 150	1.0	12	**2KJ3501 - ■ CH11 - ■ ■ V1**	
	54	98	25.56	4 200	1.1	12	**2KJ3501 - ■ CH11 - ■ ■ U1**	
	61	86	22.41	4 200	1.3	12	**2KJ3501 - ■ CH11 - ■ ■ T1**	
	68	77	20.00	4 200	1.4	12	**2KJ3501 - ■ CH11 - ■ ■ S1**	
	77	68	17.82	4 200	1.6	12	**2KJ3501 - ■ CH11 - ■ ■ R1**	
	83	63	16.45	4 200	1.7	12	**2KJ3501 - ■ CH11 - ■ ■ Q1**	
	95	55	14.40	4 200	2	12	**2KJ3501 - ■ CH11 - ■ ■ P1**	
	108	48	12.63	4 200	2.3	12	**2KJ3501 - ■ CH11 - ■ ■ N1**	
	120	44	11.46	4 200	2.5	12	**2KJ3501 - ■ CH11 - ■ ■ M1**	
	127	41	10.78	4 200	2.7	12	**2KJ3501 - ■ CH11 - ■ ■ L1**	
	144	36	9.51	4 140	3.0	12	**2KJ3501 - ■ CH11 - ■ ■ K1**	
	166	32	8.25	3 970	3.5	12	**2KJ3501 - ■ CH11 - ■ ■ J1**	
	175	30	7.84	3 890	2.5	12	**2KJ3501 - ■ CH11 - ■ ■ H1**	
	186	28	7.38	3 820	2.7	12	**2KJ3501 - ■ CH11 - ■ ■ G1**	
	210	25	6.51	3 690	3.0	12	**2KJ3501 - ■ CH11 - ■ ■ F1**	
	242	22	5.65	3 530	3.5	12	**2KJ3501 - ■ CH11 - ■ ■ E1**	
	270	19	5.07	3 460	3.8	12	**2KJ3501 - ■ CH11 - ■ ■ D1**	
	287	18	4.78	3 400	4.0	12	**2KJ3501 - ■ CH11 - ■ ■ C1**	
	325	16	4.21	3 270	4.6	12	**2KJ3501 - ■ CH11 - ■ ■ B1**	
	375	14	3.65	3 130	5.2	12	**2KJ3501 - ■ CH11 - ■ ■ A1**	
	B.19-LA71ZML4							
	87	60	15.79	1 910	0.83	10	**2KJ3500 - ■ CH11 - ■ ■ Q1**	
	94	56	14.57	1 910	0.90	10	**2KJ3500 - ■ CH11 - ■ ■ P1**	
	108	48	12.66	1 910	1.0	10	**2KJ3500 - ■ CH11 - ■ ■ N1**	
	125	42	11.00	1 910	1.2	10	**2KJ3500 - ■ CH11 - ■ ■ M1**	
	138	38	9.93	1 910	1.3	10	**2KJ3500 - ■ CH11 - ■ ■ L1**	
	147	36	9.35	1 910	1.4	10	**2KJ3500 - ■ CH11 - ■ ■ K1**	
	168	31	8.15	1 910	1.5	10	**2KJ3500 - ■ CH11 - ■ ■ J1**	
	174	30	7.87	1 910	1.3	10	**2KJ3500 - ■ CH11 - ■ ■ H1**	
	196	27	6.99	1 910	1.4	10	**2KJ3500 - ■ CH11 - ■ ■ G1**	
	212	25	6.45	1 910	1.6	10	**2KJ3500 - ■ CH11 - ■ ■ F1**	
	244	22	5.61	1 910	1.7	10	**2KJ3500 - ■ CH11 - ■ ■ E1**	
	281	19	4.87	1 910	1.9	10	**2KJ3500 - ■ CH11 - ■ ■ D1**	
	311	17	4.40	1 910	2.0	10	**2KJ3500 - ■ CH11 - ■ ■ C1**	

Article No. supplement		
Shaft design	**1, 5, 6, 7 or 9**	➞ page 10/44
Frequency and voltage	**2 or 9**	➞ page 11/2
Gearbox mounting type	**A, D, F or H**	➞ page 10/37

© Siemens AG 2017

Selection and ordering data (continued)

P_{rated}	n_2	T_2	i	F_{R2}	f_B	m	Article No.	Order code
kW	rpm	Nm	-	N	-	kg	(Article No. supplement ➞ below)	No. of poles
0.55	**B.19-LA71ZML4**							
	331	16	4.14	1 910	2.1	10	**2KJ3500 - ■ CH11 - ■ ■ B1**	
	380	14	3.61	1 910	2.2	10	**2KJ3500 - ■ CH11 - ■ ■ A1**	
	B.19-LE80MB4							
	91	58	15.79	1 910	0.87	12	**2KJ3500 - ■ DB21 - ■ ■ Q1**	
	99	53	14.57	1 910	0.94	12	**2KJ3500 - ■ DB21 - ■ ■ P1**	
	114	46	12.66	1 910	1.1	12	**2KJ3500 - ■ DB21 - ■ ■ N1**	
	131	40	11.00	1 910	1.2	12	**2KJ3500 - ■ DB21 - ■ ■ M1**	
	145	36	9.93	1 910	1.4	12	**2KJ3500 - ■ DB21 - ■ ■ L1**	
	154	34	9.35	1 910	1.5	12	**2KJ3500 - ■ DB21 - ■ ■ K1**	
	177	30	8.15	1 910	1.6	12	**2KJ3500 - ■ DB21 - ■ ■ J1**	
	183	29	7.87	1 910	1.3	12	**2KJ3500 - ■ DB21 - ■ ■ H1**	
	206	26	6.99	1 910	1.5	12	**2KJ3500 - ■ DB21 - ■ ■ G1**	
	223	24	6.45	1 910	1.7	12	**2KJ3500 - ■ DB21 - ■ ■ F1**	
	257	20	5.61	1 910	1.8	12	**2KJ3500 - ■ DB21 - ■ ■ E1**	
	296	18	4.87	1 910	2.0	12	**2KJ3500 - ■ DB21 - ■ ■ D1**	
	327	16	4.40	1 910	2.1	12	**2KJ3500 - ■ DB21 - ■ ■ C1**	
	348	15	4.14	1 910	2.2	12	**2KJ3500 - ■ DB21 - ■ ■ B1**	
	399	13	3.61	1 910	2.4	12	**2KJ3500 - ■ DB21 - ■ ■ A1**	
0.75	**K.109-LE90SQ6P**							
	4.3	1 670	216.65	24 500	1.7	101	**2KJ3511 - ■ EC23 - ■ ■ H2**	**P01**
	4.7	1 510	195.60	24 500	1.9	101	**2KJ3511 - ■ EC23 - ■ ■ G2**	**P01**
	5.2	1 370	177.43	24 500	2.1	101	**2KJ3511 - ■ EC23 - ■ ■ F2**	**P01**
	K.89-LE90SQ6P							
	4.0	1 790	231.80	18 100	0.89	64	**2KJ3510 - ■ EC23 - ■ ■ K2**	**P01**
	4.4	1 630	210.72	18 100	0.98	64	**2KJ3510 - ■ EC23 - ■ ■ J2**	**P01**
	4.9	1 460	189.01	18 100	1.1	64	**2KJ3510 - ■ EC23 - ■ ■ H2**	**P01**
	5.4	1 310	169.94	18 100	1.2	64	**2KJ3510 - ■ EC23 - ■ ■ G2**	**P01**
	K.89-LE80ZMQ4P							
	6.3	1 140	231.80	18 100	1.4	62	**2KJ3510 - ■ DF23 - ■ ■ K2**	
	6.9	1 040	210.72	18 100	1.5	62	**2KJ3510 - ■ DF23 - ■ ■ J2**	
	7.7	930	189.01	18 100	1.7	62	**2KJ3510 - ■ DF23 - ■ ■ H2**	
	8.5	835	169.94	18 100	1.9	62	**2KJ3510 - ■ DF23 - ■ ■ G2**	
	9.4	755	153.70	18 100	2.1	62	**2KJ3510 - ■ DF23 - ■ ■ F2**	
	K.79-LE80ZMQ4P							
	7.7	930	188.85	13 700	0.88	41	**2KJ3508 - ■ DF23 - ■ ■ G2**	
	8.4	845	171.69	13 900	0.97	41	**2KJ3508 - ■ DF23 - ■ ■ F2**	
	9.5	755	153.18	14 100	1.1	41	**2KJ3508 - ■ DF23 - ■ ■ E2**	
	11	675	137.35	14 200	1.2	41	**2KJ3508 - ■ DF23 - ■ ■ D2**	
	12	610	123.80	14 300	1.3	41	**2KJ3508 - ■ DF23 - ■ ■ C2**	
	13	565	114.28	14 400	1.5	41	**2KJ3508 - ■ DF23 - ■ ■ B2**	
	14	515	104.32	14 400	1.6	41	**2KJ3508 - ■ DF23 - ■ ■ A2**	
	17	425	86.56	14 400	1.9	41	**2KJ3508 - ■ DF23 - ■ ■ X1**	
	18	400	81.47	14 400	2.0	41	**2KJ3508 - ■ DF23 - ■ ■ W1**	
	19	380	76.94	14 400	2.2	41	**2KJ3508 - ■ DF23 - ■ ■ V1**	
	K.69-LE80ZMQ4P							
	9.5	750	152.00	9 880	0.80	36	**2KJ3507 - ■ DF23 - ■ ■ F2**	
	10	680	138.18	10 300	0.88	36	**2KJ3507 - ■ DF23 - ■ ■ E2**	

Article No. supplement		
Shaft design	**1, 5, 6, 7 or 9**	➞ page 10/44
Frequency and voltage	**2 or 9**	➞ page 11/2
Gearbox mounting type	**A, D, F or H**	➞ page 10/37

© Siemens AG 2017

5

Selection and ordering data (continued)

P_{rated}	n_2	T_2	i	F_{R2}	f_B	m	Article No.	Order code
kW	rpm	Nm	-	N	-	kg	(Article No. supplement ➞ below)	No. of poles
0.75	**K.69-LE80ZMQ4P**							
	12	605	123.29	10 800	0.99	36	**2KJ3507 - ■ DF23 - ■ ■ D2**	
	13	545	110.55	10 900	1.1	36	**2KJ3507 - ■ DF23 - ■ ■ C2**	
	15	490	99.64	11 100	1.2	36	**2KJ3507 - ■ DF23 - ■ ■ B2**	
	16	450	91.98	11 200	1.3	36	**2KJ3507 - ■ DF23 - ■ ■ A2**	
	17	415	83.96	11 200	1.4	36	**2KJ3507 - ■ DF23 - ■ ■ X1**	
	21	340	69.67	11 100	1.7	36	**2KJ3507 - ■ DF23 - ■ ■ W1**	
	K.69-LE80ZMQ4P							
	22	320	65.57	11 000	1.9	36	**2KJ3507 - ■ DF23 - ■ ■ V1**	
	23	305	61.93	10 800	2.0	36	**2KJ3507 - ■ DF23 - ■ ■ U1**	
	28	260	52.69	10 500	2.3	36	**2KJ3507 - ■ DF23 - ■ ■ T1**	
	K.49-LE80ZMQ4P							
	15	480	97.71	7 250	0.87	29	**2KJ3505 - ■ DF23 - ■ ■ C2**	
	16	435	88.83	7 260	0.96	29	**2KJ3505 - ■ DF23 - ■ ■ B2**	
	19	380	77.81	7 230	1.1	29	**2KJ3505 - ■ DF23 - ■ ■ A2**	
	20	355	71.82	7 150	1.2	29	**2KJ3505 - ■ DF23 - ■ ■ X1**	
	23	310	63.59	7 110	1.3	29	**2KJ3505 - ■ DF23 - ■ ■ W1**	
	27	260	52.93	6 930	1.6	29	**2KJ3505 - ■ DF23 - ■ ■ V1**	
	29	245	49.82	6 870	1.7	29	**2KJ3505 - ■ DF23 - ■ ■ U1**	
	32	220	44.63	6 750	1.9	29	**2KJ3505 - ■ DF23 - ■ ■ T1**	
	38	188	38.00	6 560	2.2	29	**2KJ3505 - ■ DF23 - ■ ■ S1**	
	45	161	32.57	6 360	2.6	29	**2KJ3505 - ■ DF23 - ■ ■ R1**	
	B.49-LE90SQ6P							
	16	455	59.28	11 200	0.98	28	**2KJ3503 - ■ EC23 - ■ ■ C2**	**P01**
	17	415	53.89	11 200	1.1	28	**2KJ3503 - ■ EC23 - ■ ■ B2**	**P01**
	20	355	45.83	10 900	1.3	28	**2KJ3503 - ■ EC23 - ■ ■ A2**	**P01**
	22	320	41.67	10 700	1.4	28	**2KJ3503 - ■ EC23 - ■ ■ X1**	**P01**
	B.49-LE80ZMQ4P							
	24	290	59.28	10 500	1.5	27	**2KJ3503 - ■ DF23 - ■ ■ C2**	
	27	265	53.89	10 300	1.7	27	**2KJ3503 - ■ DF23 - ■ ■ B2**	
	32	225	45.83	9 980	2.0	27	**2KJ3503 - ■ DF23 - ■ ■ A2**	
	35	205	41.67	9 760	2.2	27	**2KJ3503 - ■ DF23 - ■ ■ X1**	
	39	184	37.18	9 480	2.5	27	**2KJ3503 - ■ DF23 - ■ ■ W1**	
	44	165	33.33	9 220	2.7	27	**2KJ3503 - ■ DF23 - ■ ■ V1**	
	K.39-LE80ZMQ4P							
	26	270	55.25	5 890	0.81	22	**2KJ3504 - ■ DF23 - ■ ■ X1**	
	30	235	48.37	6 000	0.92	22	**2KJ3504 - ■ DF23 - ■ ■ W1**	
	34	205	42.41	5 930	1.1	22	**2KJ3504 - ■ DF23 - ■ ■ V1**	
	38	190	38.48	5 810	1.2	22	**2KJ3504 - ■ DF23 - ■ ■ U1**	
	40	179	36.21	5 760	1.2	22	**2KJ3504 - ■ DF23 - ■ ■ T1**	
	45	158	31.92	5 650	1.4	22	**2KJ3504 - ■ DF23 - ■ ■ S1**	
	52	137	27.70	5 510	1.6	22	**2KJ3504 - ■ DF23 - ■ ■ R1**	
	54	133	26.89	5 480	1.7	22	**2KJ3504 - ■ DF23 - ■ ■ Q1**	
	60	118	23.97	5 370	1.9	22	**2KJ3504 - ■ DF23 - ■ ■ P1**	
	66	109	22.12	5 280	2.0	22	**2KJ3504 - ■ DF23 - ■ ■ N1**	
	75	96	19.37	5 120	2.3	22	**2KJ3504 - ■ DF23 - ■ ■ M1**	
	85	84	16.98	4 970	2.6	22	**2KJ3504 - ■ DF23 - ■ ■ L1**	
	94	76	15.41	4 860	2.9	22	**2KJ3504 - ■ DF23 - ■ ■ K1**	

Article No. supplement		
Shaft design	**1, 5, 6, 7 or 9**	➞ page 10/44
Frequency and voltage	**2 or 9**	➞ page 11/2
Gearbox mounting type	**A, D, F or H**	➞ page 10/37

© Siemens AG 2017

Selection and ordering data (continued)

P_{rated} kW	n_2 rpm	T_2 Nm	i -	F_{R2} N	f_B -	m kg	Article No. (Article No. supplement ➞ below)	Order code No. of poles
0.75	**K.39-LE80ZMQ4P**							
	100	72	14.50	4 790	3.1	22	**2KJ3504 - ■ DF23 - ■ ■ J1**	
	113	63	12.78	4 650	3.5	22	**2KJ3504 - ■ DF23 - ■ ■ H1**	
	144	50	10.04	4 290	3.7	22	**2KJ3504 - ■ DF23 - ■ ■ F1**	
	B.39-LE80ZMQ4P							
	29	245	50.11	6 980	0.85	21	**2KJ3502 - ■ DF23 - ■ ■ X1**	
	33	215	44.00	6 980	1.2	21	**2KJ3502 - ■ DF23 - ■ ■ W1**	
	36	198	40.00	6 980	1.2	21	**2KJ3502 - ■ DF23 - ■ ■ V1**	
	42	169	34.22	6 980	1.5	21	**2KJ3502 - ■ DF23 - ■ ■ U1**	
	47	154	31.11	6 980	1.6	21	**2KJ3502 - ■ DF23 - ■ ■ T1**	
	53	136	27.50	6 980	1.8	21	**2KJ3502 - ■ DF23 - ■ ■ S1**	
	58	123	25.00	6 980	2.0	21	**2KJ3502 - ■ DF23 - ■ ■ R1**	
	66	108	21.90	6 980	2.3	21	**2KJ3502 - ■ DF23 - ■ ■ Q1**	
	72	100	20.21	6 980	2.5	21	**2KJ3502 - ■ DF23 - ■ ■ P1**	
	81	88	17.90	6 980	2.8	21	**2KJ3502 - ■ DF23 - ■ ■ N1**	
	97	74	14.90	6 980	3.4	21	**2KJ3502 - ■ DF23 - ■ ■ M1**	
	B.29-LE80ZMQ4P							
	57	126	25.56	4 050	0.87	16	**2KJ3501 - ■ DF23 - ■ ■ U1**	
	65	111	22.41	4 130	0.99	16	**2KJ3501 - ■ DF23 - ■ ■ T1**	
	72	99	20.00	4 190	1.1	16	**2KJ3501 - ■ DF23 - ■ ■ S1**	
	81	88	17.82	4 200	1.2	16	**2KJ3501 - ■ DF23 - ■ ■ R1**	
	88	81	16.45	4 200	1.4	16	**2KJ3501 - ■ DF23 - ■ ■ Q1**	
	101	71	14.40	4 200	1.5	16	**2KJ3501 - ■ DF23 - ■ ■ P1**	
	115	62	12.63	4 200	1.8	16	**2KJ3501 - ■ DF23 - ■ ■ N1**	
	127	57	11.46	4 140	1.9	16	**2KJ3501 - ■ DF23 - ■ ■ M1**	
	135	53	10.78	4 090	2.1	16	**2KJ3501 - ■ DF23 - ■ ■ L1**	
	152	47	9.51	3 950	2.3	16	**2KJ3501 - ■ DF23 - ■ ■ K1**	
	176	41	8.25	3 810	2.7	16	**2KJ3501 - ■ DF23 - ■ ■ J1**	
	185	39	7.84	3 720	1.9	16	**2KJ3501 - ■ DF23 - ■ ■ H1**	
	196	36	7.38	3 660	2.1	16	**2KJ3501 - ■ DF23 - ■ ■ G1**	
	223	32	6.51	3 540	2.3	16	**2KJ3501 - ■ DF23 - ■ ■ F1**	
	257	28	5.65	3 400	2.7	16	**2KJ3501 - ■ DF23 - ■ ■ E1**	
	286	25	5.07	3 340	3.0	16	**2KJ3501 - ■ DF23 - ■ ■ D1**	
	303	24	4.78	3 270	3.1	16	**2KJ3501 - ■ DF23 - ■ ■ C1**	
	344	21	4.21	3 160	3.6	16	**2KJ3501 - ■ DF23 - ■ ■ B1**	
	397	18	3.65	3 030	4.0	16	**2KJ3501 - ■ DF23 - ■ ■ A1**	
	B.19-LE80ZMQ4P							
	115	62	12.66	1 910	0.80	14	**2KJ3500 - ■ DF23 - ■ ■ N1**	
	132	54	11.00	1 910	0.92	14	**2KJ3500 - ■ DF23 - ■ ■ M1**	
	146	49	9.93	1 910	1.0	14	**2KJ3500 - ■ DF23 - ■ ■ L1**	
	155	46	9.35	1 910	1.1	14	**2KJ3500 - ■ DF23 - ■ ■ K1**	
	178	40	8.15	1 910	1.2	14	**2KJ3500 - ■ DF23 - ■ ■ J1**	
	184	39	7.87	1 910	0.98	14	**2KJ3500 - ■ DF23 - ■ ■ H1**	
	207	34	6.99	1 910	1.1	14	**2KJ3500 - ■ DF23 - ■ ■ G1**	
	225	32	6.45	1 910	1.2	14	**2KJ3500 - ■ DF23 - ■ ■ F1**	
	258	28	5.61	1 910	1.3	14	**2KJ3500 - ■ DF23 - ■ ■ E1**	
	298	24	4.87	1 910	1.5	14	**2KJ3500 - ■ DF23 - ■ ■ D1**	
	330	22	4.40	1 910	1.6	14	**2KJ3500 - ■ DF23 - ■ ■ C1**	

Article No. supplement		
Shaft design	**1, 5, 6, 7 or 9**	➞ page 10/44
Frequency and voltage	**2 or 9**	➞ page 11/2
Gearbox mounting type	**A, D, F or H**	➞ page 10/37

© Siemens AG 2017

5

Selection and ordering data (continued)

P_{rated} kW	n_2 rpm	T_2 Nm	i -	F_{R2} N	f_B -	m kg	Article No. (Article No. supplement ➞ below)	Order code No. of poles
0.75	**B.19-LE80ZMQ4P**							
	350	20	4.14	1 910	1.6	14	**2KJ3500 - ■ DF23 - ■ ■ B1**	
	402	18	3.61	1 910	1.7	14	**2KJ3500 - ■ DF23 - ■ ■ A1**	
1.1	**K.129-LE90ZLR6P**							
	4.1	2 560	228.30	39 400	1.7	154	**2KJ3512 - ■ EM23 - ■ ■ J2**	**P01**
	4.4	2 360	210.74	39 600	1.9	154	**2KJ3512 - ■ EM23 - ■ ■ H2**	**P01**
	4.8	2 180	194.04	39 800	2.0	154	**2KJ3512 - ■ EM23 - ■ ■ G2**	**P01**
	K.109-LE90ZLR6P							
	4.3	2 430	216.65	24 500	1.2	104	**2KJ3511 - ■ EM23 - ■ ■ H2**	**P01**
	4.8	2 190	195.60	24 500	1.3	104	**2KJ3511 - ■ EM23 - ■ ■ G2**	**P01**
	5.3	1 990	177.43	24 500	1.5	104	**2KJ3511 - ■ EM23 - ■ ■ F2**	**P01**
	5.7	1 840	163.78	24 500	1.6	104	**2KJ3511 - ■ EM23 - ■ ■ E2**	**P01**
	6.3	1 670	148.88	24 500	1.7	104	**2KJ3511 - ■ EM23 - ■ ■ D2**	**P01**
	K.109-LE90SM4P							
	6.6	1 590	216.65	24 500	1.8	101	**2KJ3511 - ■ EK23 - ■ ■ H2**	
	7.3	1 440	195.60	24 500	2.0	101	**2KJ3511 - ■ EK23 - ■ ■ G2**	
	K.89-LE90ZLR6P							
	5.5	1 900	169.94	18 100	0.84	67	**2KJ3510 - ■ EM23 - ■ ■ G2**	**P01**
	K.89-LE90SM4P							
	6.1	1 700	231.80	18 100	0.94	64	**2KJ3510 - ■ EK23 - ■ ■ K2**	
	6.8	1 550	210.72	18 100	1.0	64	**2KJ3510 - ■ EK23 - ■ ■ J2**	
	7.5	1 390	189.01	18 100	1.1	64	**2KJ3510 - ■ EK23 - ■ ■ H2**	
	8.4	1 250	169.94	18 100	1.3	64	**2KJ3510 - ■ EK23 - ■ ■ G2**	
	9.3	1 130	153.70	18 100	1.4	64	**2KJ3510 - ■ EK23 - ■ ■ F2**	
	10	1 040	141.88	18 100	1.5	64	**2KJ3510 - ■ EK23 - ■ ■ E2**	
	11	955	129.96	18 100	1.7	64	**2KJ3510 - ■ EK23 - ■ ■ D2**	
	13	800	109.04	18 100	2.0	64	**2KJ3510 - ■ EK23 - ■ ■ C2**	
	14	755	102.63	18 100	2.1	64	**2KJ3510 - ■ EK23 - ■ ■ B2**	
	K.79-LE90SM4P							
	10	1 010	137.35	13 600	0.81	42	**2KJ3508 - ■ EK23 - ■ ■ D2**	
	12	840	114.28	13 900	0.97	42	**2KJ3508 - ■ EK23 - ■ ■ B2**	
	12	910	123.80	13 700	0.90	42	**2KJ3508 - ■ EK23 - ■ ■ C2**	
	14	765	104.32	14 000	1.1	42	**2KJ3508 - ■ EK23 - ■ ■ A2**	
	16	635	86.56	14 300	1.3	42	**2KJ3508 - ■ EK23 - ■ ■ X1**	
	17	600	81.47	14 400	1.4	42	**2KJ3508 - ■ EK23 - ■ ■ W1**	
	19	565	76.94	14 400	1.4	42	**2KJ3508 - ■ EK23 - ■ ■ V1**	
	22	480	65.47	14 400	1.7	42	**2KJ3508 - ■ EK23 - ■ ■ U1**	
	25	410	56.08	14 400	2.0	42	**2KJ3508 - ■ EK23 - ■ ■ T1**	
	29	360	49.31	14 400	2.3	42	**2KJ3508 - ■ EK23 - ■ ■ S1**	
	34	305	41.60	14 400	2.6	42	**2KJ3508 - ■ EK23 - ■ ■ R1**	
	K.69-LE90SM4P							
	14	735	99.64	9 990	0.82	37	**2KJ3507 - ■ EK23 - ■ ■ B2**	
	15	675	91.98	10 100	0.88	37	**2KJ3507 - ■ EK23 - ■ ■ A2**	
	17	615	83.96	10 100	0.97	37	**2KJ3507 - ■ EK23 - ■ ■ X1**	
	20	510	69.67	10 000	1.2	37	**2KJ3507 - ■ EK23 - ■ ■ W1**	
	22	480	65.57	9 960	1.2	37	**2KJ3507 - ■ EK23 - ■ ■ V1**	
	23	455	61.93	9 890	1.3	37	**2KJ3507 - ■ EK23 - ■ ■ U1**	
	27	385	52.69	9 700	1.5	37	**2KJ3507 - ■ EK23 - ■ ■ T1**	
	32	330	45.14	9 470	1.8	37	**2KJ3507 - ■ EK23 - ■ ■ S1**	

Article No. supplement		
Shaft design	**1, 5, 6, 7 or 9**	➞ page 10/44
Frequency and voltage	**2 or 9**	➞ page 11/2
Gearbox mounting type	**A, D, F or H**	➞ page 10/37

© Siemens AG 2017

Selection and ordering data (continued)

P_{rated}	n_2	T_2	i	F_{R2}	f_B	m	Article No.	Order code
kW	rpm	Nm	-	N	-	kg	(Article No. supplement ➞ below)	No. of poles
1.1	**K.69-LE90SM4P**							
	36	290	39.69	9 260	2.1	37	**2KJ3507 - ■ EK23 - ■ ■ R1**	
	43	245	33.48	8 950	2.3	37	**2KJ3507 - ■ EK23 - ■ ■ Q1**	
	49	215	29.18	8 690	2.6	37	**2KJ3507 - ■ EK23 - ■ ■ P1**	
	K.49-LE90SM4P							
	22	465	63.59	5 960	0.90	30	**2KJ3505 - ■ EK23 - ■ ■ W1**	
	27	390	52.93	5 970	1.1	30	**2KJ3505 - ■ EK23 - ■ ■ V1**	
	29	365	49.82	5 980	1.1	30	**2KJ3505 - ■ EK23 - ■ ■ U1**	
	32	325	44.63	5 980	1.3	30	**2KJ3505 - ■ EK23 - ■ ■ T1**	
	38	280	38.00	5 890	1.5	30	**2KJ3505 - ■ EK23 - ■ ■ S1**	
	44	240	32.57	5 790	1.7	30	**2KJ3505 - ■ EK23 - ■ ■ R1**	
	51	205	28.05	5 690	2.0	30	**2KJ3505 - ■ EK23 - ■ ■ Q1**	
	54	194	26.30	5 620	2.2	30	**2KJ3505 - ■ EK23 - ■ ■ P1**	
	61	172	23.28	5 510	2.4	30	**2KJ3505 - ■ EK23 - ■ ■ N1**	
	74	143	19.38	5 330	2.9	30	**2KJ3505 - ■ EK23 - ■ ■ M1**	
	78	134	18.24	5 270	3.1	30	**2KJ3505 - ■ EK23 - ■ ■ L1**	
	146	72	9.75	4 530	3.8	30	**2KJ3505 - ■ EK23 - ■ ■ F1**	
	155	68	9.18	4 460	4.0	30	**2KJ3505 - ■ EK23 - ■ ■ E1**	
	173	61	8.22	4 330	4.2	30	**2KJ3505 - ■ EK23 - ■ ■ D1**	
	B.49-LE90ZLR6P							
	20	515	45.83	9 860	0.87	31	**2KJ3503 - ■ EM23 - ■ ■ A2**	**P01**
	22	465	41.67	9 780	0.96	31	**2KJ3503 - ■ EM23 - ■ ■ X1**	**P01**
	B.49-LE90SM4P							
	24	435	59.28	9 680	1.0	28	**2KJ3503 - ■ EK23 - ■ ■ C2**	
	26	395	53.89	9 560	1.1	28	**2KJ3503 - ■ EK23 - ■ ■ B2**	
	31	335	45.83	9 320	1.3	28	**2KJ3503 - ■ EK23 - ■ ■ A2**	
	34	305	41.67	9 150	1.5	28	**2KJ3503 - ■ EK23 - ■ ■ X1**	
	38	270	37.18	8 970	1.6	28	**2KJ3503 - ■ EK23 - ■ ■ W1**	
	43	245	33.33	8 750	1.8	28	**2KJ3503 - ■ EK23 - ■ ■ V1**	
	47	220	30.05	8 560	2.0	28	**2KJ3503 - ■ EK23 - ■ ■ U1**	
	51	200	27.74	8 430	2.2	28	**2KJ3503 - ■ EK23 - ■ ■ T1**	
	56	187	25.32	8 230	2.4	28	**2KJ3503 - ■ EK23 - ■ ■ S1**	
	68	155	21.01	7 870	2.9	28	**2KJ3503 - ■ EK23 - ■ ■ R1**	
	72	146	19.77	7 750	3.1	28	**2KJ3503 - ■ EK23 - ■ ■ Q1**	
	K.39-LE90SM4P							
	39	265	36.21	5 030	0.82	24	**2KJ3504 - ■ EK23 - ■ ■ T1**	
	45	235	31.92	4 990	0.93	24	**2KJ3504 - ■ EK23 - ■ ■ S1**	
	51	200	27.70	4 980	1.1	24	**2KJ3504 - ■ EK23 - ■ ■ R1**	
	53	198	26.89	4 930	1.1	24	**2KJ3504 - ■ EK23 - ■ ■ Q1**	
	59	177	23.97	4 870	1.2	24	**2KJ3504 - ■ EK23 - ■ ■ P1**	
	64	163	22.12	4 820	1.3	24	**2KJ3504 - ■ EK23 - ■ ■ N1**	
	74	143	19.37	4 730	1.5	24	**2KJ3504 - ■ EK23 - ■ ■ M1**	
	84	125	16.98	4 640	1.8	24	**2KJ3504 - ■ EK23 - ■ ■ L1**	
	92	114	15.41	4 550	1.9	24	**2KJ3504 - ■ EK23 - ■ ■ K1**	
	98	107	14.50	4 500	2.1	24	**2KJ3504 - ■ EK23 - ■ ■ J1**	
	112	94	12.78	4 400	2.3	24	**2KJ3504 - ■ EK23 - ■ ■ H1**	
	128	82	11.09	4 260	2.7	24	**2KJ3504 - ■ EK23 - ■ ■ G1**	
	142	74	10.04	4 070	2.5	24	**2KJ3504 - ■ EK23 - ■ ■ F1**	

Article No. supplement		
Shaft design	**1, 5, 6, 7 or 9**	➞ page 10/44
Frequency and voltage	**2 or 9**	➞ page 11/2
Gearbox mounting type	**A, D, F or H**	➞ page 10/37

© Siemens AG 2017

Selection and ordering data (continued)

P_{rated} kW	n_2 rpm	T_2 Nm	i -	F_{R2} N	f_B -	m kg	Article No. (Article No. supplement ➞ below)	Order code No. of poles
1.1	**K.39-LE90SM4P**							
	162	65	8.81	3 950	2.8	24	**2KJ3504 - ■ EK23 - ■ ■ E1**	
	178	59	7.99	3 870	3.0	24	**2KJ3504 - ■ EK23 - ■ ■ D1**	
	189	55	7.52	3 820	3.1	24	**2KJ3504 - ■ EK23 - ■ ■ C1**	
	215	49	6.63	3 700	3.3	24	**2KJ3504 - ■ EK23 - ■ ■ B1**	
	248	42	5.75	3 580	3.5	24	**2KJ3504 - ■ EK23 - ■ ■ A1**	
	B.39-LE90SM4P							
	42	250	34.22	6 980	0.99	23	**2KJ3502 - ■ EK23 - ■ ■ U1**	
	46	225	31.11	6 980	1.1	23	**2KJ3502 - ■ EK23 - ■ ■ T1**	
	52	200	27.50	6 980	1.2	23	**2KJ3502 - ■ EK23 - ■ ■ S1**	
	57	184	25.00	6 980	1.4	23	**2KJ3502 - ■ EK23 - ■ ■ R1**	
	65	161	21.90	6 980	1.5	23	**2KJ3502 - ■ EK23 - ■ ■ Q1**	
	71	149	20.21	6 980	1.7	23	**2KJ3502 - ■ EK23 - ■ ■ P1**	
	80	132	17.90	6 980	1.9	23	**2KJ3502 - ■ EK23 - ■ ■ N1**	
	96	110	14.90	6 800	2.3	23	**2KJ3502 - ■ EK23 - ■ ■ M1**	
	102	103	14.02	6 710	2.4	23	**2KJ3502 - ■ EK23 - ■ ■ L1**	
	113	93	12.56	6 510	2.7	23	**2KJ3502 - ■ EK23 - ■ ■ K1**	
	133	79	10.69	6 240	3.0	23	**2KJ3502 - ■ EK23 - ■ ■ J1**	
	155	68	9.17	5 980	3.4	23	**2KJ3502 - ■ EK23 - ■ ■ H1**	
	181	58	7.89	5 740	3.8	23	**2KJ3502 - ■ EK23 - ■ ■ G1**	
	216	49	6.60	5 490	4.1	23	**2KJ3502 - ■ EK23 - ■ ■ F1**	
	229	46	6.21	5 400	4.4	23	**2KJ3502 - ■ EK23 - ■ ■ E1**	
	B.29-LE90SM4P							
	80	131	17.82	4 030	0.84	18	**2KJ3501 - ■ EK23 - ■ ■ R1**	
	87	121	16.45	4 080	0.91	18	**2KJ3501 - ■ EK23 - ■ ■ Q1**	
	99	106	14.40	4 090	1.0	18	**2KJ3501 - ■ EK23 - ■ ■ P1**	
	113	93	12.63	3 990	1.2	18	**2KJ3501 - ■ EK23 - ■ ■ N1**	
	124	84	11.46	3 920	1.3	18	**2KJ3501 - ■ EK23 - ■ ■ M1**	
	132	80	10.78	3 860	1.4	18	**2KJ3501 - ■ EK23 - ■ ■ L1**	
	150	70	9.51	3 760	1.6	18	**2KJ3501 - ■ EK23 - ■ ■ K1**	
	173	61	8.25	3 640	1.8	18	**2KJ3501 - ■ EK23 - ■ ■ J1**	
	182	58	7.84	3 550	1.3	18	**2KJ3501 - ■ EK23 - ■ ■ H1**	
	193	54	7.38	3 500	1.4	18	**2KJ3501 - ■ EK23 - ■ ■ G1**	
	219	48	6.51	3 400	1.6	18	**2KJ3501 - ■ EK23 - ■ ■ F1**	
	252	42	5.65	3 280	1.8	18	**2KJ3501 - ■ EK23 - ■ ■ E1**	
	281	37	5.07	3 250	2.0	18	**2KJ3501 - ■ EK23 - ■ ■ D1**	
	298	35	4.78	3 200	2.1	18	**2KJ3501 - ■ EK23 - ■ ■ C1**	
	338	31	4.21	3 090	2.4	18	**2KJ3501 - ■ EK23 - ■ ■ B1**	
	390	27	3.65	2 970	2.7	18	**2KJ3501 - ■ EK23 - ■ ■ A1**	
1.5	**K.129-LE100LLB6P**							
	4.2	3 370	228.30	38 600	1.3	167	**2KJ3512 - ■ FM23 - ■ ■ J2**	**P01**
	4.6	3 110	210.74	38 900	1.4	167	**2KJ3512 - ■ FM23 - ■ ■ H2**	**P01**
	5.0	2 860	194.04	39 100	1.5	167	**2KJ3512 - ■ FM23 - ■ ■ G2**	**P01**
	5.9	2 440	165.47	39 500	1.8	167	**2KJ3512 - ■ FM23 - ■ ■ F2**	**P01**
	K.129-LE90ZLR4P							
	6.3	2 260	228.30	39 700	1.9	154	**2KJ3512 - ■ EM23 - ■ ■ J2**	
	6.9	2 080	210.74	39 900	2.1	154	**2KJ3512 - ■ EM23 - ■ ■ H2**	

Article No. supplement		
Shaft design	**1, 5, 6, 7 or 9**	➞ page 10/44
Frequency and voltage	**2 or 9**	➞ page 11/2
Gearbox mounting type	**A, D, F or H**	➞ page 10/37

© Siemens AG 2017

Selection and ordering data (continued)

P_{rated}	n_2	T_2	i	F_{R2}	f_B	m	Article No.	Order code
kW	rpm	Nm	-	N	-	kg	(Article No. supplement ➞ below)	No. of poles
1.5	**K.109-LE100LLB6P**							
	4.5	3 190	216.65	24 500	0.91	116	**2KJ3511 - ■ FM23 - ■ ■ H2**	**P01**
	5.0	2 880	195.60	24 500	1.0	116	**2KJ3511 - ■ FM23 - ■ ■ G2**	**P01**
	5.5	2 620	177.43	24 500	1.1	116	**2KJ3511 - ■ FM23 - ■ ■ F2**	**P01**
	5.9	2 410	163.78	24 500	1.2	116	**2KJ3511 - ■ FM23 - ■ ■ E2**	**P01**
	K.109-LE90ZLR4P							
	6.7	2 140	216.65	24 500	1.4	104	**2KJ3511 - ■ EM23 - ■ ■ H2**	
	7.4	1 930	195.60	24 500	1.5	104	**2KJ3511 - ■ EM23 - ■ ■ G2**	
	8.1	1 750	177.43	24 500	1.6	104	**2KJ3511 - ■ EM23 - ■ ■ F2**	
	8.8	1 620	163.78	24 500	1.8	104	**2KJ3511 - ■ EM23 - ■ ■ E2**	
	9.7	1 470	148.88	24 500	2.0	104	**2KJ3511 - ■ EM23 - ■ ■ D2**	
	K.89-LE90ZLR4P							
	7.6	1 870	189.01	18 100	0.85	67	**2KJ3510 - ■ EM23 - ■ ■ H2**	
	8.5	1 680	169.94	18 100	0.95	67	**2KJ3510 - ■ EM23 - ■ ■ G2**	
	9.4	1 520	153.70	18 100	1.1	67	**2KJ3510 - ■ EM23 - ■ ■ F2**	
	10	1 400	141.88	18 100	1.1	67	**2KJ3510 - ■ EM23 - ■ ■ E2**	
	11	1 280	129.96	18 100	1.2	67	**2KJ3510 - ■ EM23 - ■ ■ D2**	
	13	1 080	109.04	18 100	1.5	67	**2KJ3510 - ■ EM23 - ■ ■ C2**	
	14	1 010	102.63	18 100	1.6	67	**2KJ3510 - ■ EM23 - ■ ■ B2**	
	15	930	94.16	18 100	1.7	67	**2KJ3510 - ■ EM23 - ■ ■ A2**	
	18	815	82.25	18 100	2.0	67	**2KJ3510 - ■ EM23 - ■ ■ X1**	
	20	730	73.64	18 100	2.2	67	**2KJ3510 - ■ EM23 - ■ ■ W1**	
	K.79-LE90ZLR4P							
	17	855	86.56	13 900	0.96	45	**2KJ3508 - ■ EM23 - ■ ■ X1**	
	18	805	81.47	14 000	1.0	45	**2KJ3508 - ■ EM23 - ■ ■ W1**	
	19	760	76.94	14 000	1.1	45	**2KJ3508 - ■ EM23 - ■ ■ V1**	
	22	645	65.47	14 300	1.3	45	**2KJ3508 - ■ EM23 - ■ ■ U1**	
	26	555	56.08	14 400	1.5	45	**2KJ3508 - ■ EM23 - ■ ■ T1**	
	29	485	49.31	14 400	1.7	45	**2KJ3508 - ■ EM23 - ■ ■ S1**	
	35	410	41.60	14 400	1.9	45	**2KJ3508 - ■ EM23 - ■ ■ R1**	
	40	355	36.26	14 400	2.1	45	**2KJ3508 - ■ EM23 - ■ ■ Q1**	
	44	325	32.78	14 400	2.5	45	**2KJ3508 - ■ EM23 - ■ ■ P1**	
	K.69-LE90ZLR4P							
	21	690	69.67	8 680	0.87	40	**2KJ3507 - ■ EM23 - ■ ■ W1**	
	22	650	65.57	8 690	0.92	40	**2KJ3507 - ■ EM23 - ■ ■ V1**	
	23	610	61.93	8 720	0.98	40	**2KJ3507 - ■ EM23 - ■ ■ U1**	
	27	520	52.69	8 680	1.1	40	**2KJ3507 - ■ EM23 - ■ ■ T1**	
	32	445	45.14	8 590	1.3	40	**2KJ3507 - ■ EM23 - ■ ■ S1**	
	36	390	39.69	8 490	1.5	40	**2KJ3507 - ■ EM23 - ■ ■ R1**	
	43	330	33.48	8 300	1.7	40	**2KJ3507 - ■ EM23 - ■ ■ Q1**	
	50	285	29.18	8 140	1.9	40	**2KJ3507 - ■ EM23 - ■ ■ P1**	
	55	255	26.05	7 980	2.3	40	**2KJ3507 - ■ EM23 - ■ ■ N1**	
	59	240	24.52	7 890	2.4	40	**2KJ3507 - ■ EM23 - ■ ■ M1**	
	62	225	23.15	7 810	2.5	40	**2KJ3507 - ■ EM23 - ■ ■ L1**	
	73	195	19.70	7 530	2.8	40	**2KJ3507 - ■ EM23 - ■ ■ K1**	
	86	167	16.88	7 280	3.2	40	**2KJ3507 - ■ EM23 - ■ ■ J1**	
	97	147	14.84	7 070	3.5	40	**2KJ3507 - ■ EM23 - ■ ■ H1**	
	155	93	9.34	6 130	4.0	40	**2KJ3507 - ■ EM23 - ■ ■ E1**	

Article No. supplement		
Shaft design	**1, 5, 6, 7 or 9**	➞ page 10/44
Frequency and voltage	**2 or 9**	➞ page 11/2
Gearbox mounting type	**A, D, F or H**	➞ page 10/37

© Siemens AG 2017

5

Selection and ordering data (continued)

P_{rated} kW	n_2 rpm	T_2 Nm	i -	F_{R2} N	f_B -	m kg	Article No. (Article No. supplement ➞ below)	Order code No. of poles
1.5	**K.49-LE90ZLR4P**							
	27	525	52.93	4 880	0.80	33	**2KJ3505 - ■ EM23 - ■ ■ V1**	
	29	490	49.82	4 970	0.85	33	**2KJ3505 - ■ EM23 - ■ ■ U1**	
	32	440	44.63	5 040	0.95	33	**2KJ3505 - ■ EM23 - ■ ■ T1**	
	38	375	38.00	5 110	1.1	33	**2KJ3505 - ■ EM23 - ■ ■ S1**	
	44	320	32.57	5 130	1.3	33	**2KJ3505 - ■ EM23 - ■ ■ R1**	
	52	275	28.05	5 110	1.5	33	**2KJ3505 - ■ EM23 - ■ ■ Q1**	
	55	260	26.30	5 080	1.6	33	**2KJ3505 - ■ EM23 - ■ ■ P1**	
	62	230	23.28	5 030	1.8	33	**2KJ3505 - ■ EM23 - ■ ■ N1**	
	75	192	19.38	4 920	2.2	33	**2KJ3505 - ■ EM23 - ■ ■ M1**	
	79	181	18.24	4 880	2.3	33	**2KJ3505 - ■ EM23 - ■ ■ L1**	
	88	162	16.34	4 800	2.6	33	**2KJ3505 - ■ EM23 - ■ ■ K1**	
	104	138	13.91	4 670	3.0	33	**2KJ3505 - ■ EM23 - ■ ■ J1**	
	121	118	11.93	4 540	3.6	33	**2KJ3505 - ■ EM23 - ■ ■ H1**	
	148	97	9.75	4 290	2.8	33	**2KJ3505 - ■ EM23 - ■ ■ F1**	
	157	91	9.18	4 240	3.0	33	**2KJ3505 - ■ EM23 - ■ ■ E1**	
	176	82	8.22	4 140	3.1	33	**2KJ3505 - ■ EM23 - ■ ■ D1**	
	206	69	7.00	3 990	3.5	33	**2KJ3505 - ■ EM23 - ■ ■ C1**	
	241	60	6.00	3 840	3.8	33	**2KJ3505 - ■ EM23 - ■ ■ B1**	
	279	51	5.17	3 700	4.1	33	**2KJ3505 - ■ EM23 - ■ ■ A1**	
	B.49-LE90ZLR4P							
	27	530	53.89	8 600	0.84	31	**2KJ3503 - ■ EM23 - ■ ■ B2**	
	32	450	45.83	8 500	0.99	31	**2KJ3503 - ■ EM23 - ■ ■ A2**	
	35	410	41.67	8 400	1.1	31	**2KJ3503 - ■ EM23 - ■ ■ X1**	
	39	365	37.18	8 290	1.2	31	**2KJ3503 - ■ EM23 - ■ ■ W1**	
	43	330	33.33	8 140	1.4	31	**2KJ3503 - ■ EM23 - ■ ■ V1**	
	48	295	30.05	8 020	1.5	31	**2KJ3503 - ■ EM23 - ■ ■ U1**	
	52	275	27.74	7 890	1.6	31	**2KJ3503 - ■ EM23 - ■ ■ T1**	
	57	250	25.32	7 760	1.8	31	**2KJ3503 - ■ EM23 - ■ ■ S1**	
	69	205	21.01	7 490	2.2	31	**2KJ3503 - ■ EM23 - ■ ■ R1**	
	73	196	19.77	7 380	2.3	31	**2KJ3503 - ■ EM23 - ■ ■ Q1**	
	77	185	18.67	7 290	2.4	31	**2KJ3503 - ■ EM23 - ■ ■ P1**	
	91	158	15.89	7 020	2.9	31	**2KJ3503 - ■ EM23 - ■ ■ N1**	
	106	135	13.61	6 770	3.3	31	**2KJ3503 - ■ EM23 - ■ ■ M1**	
	174	82	8.29	6 010	4.0	31	**2KJ3503 - ■ EM23 - ■ ■ H1**	
	185	77	7.80	5 910	4.3	31	**2KJ3503 - ■ EM23 - ■ ■ G1**	
	K.39-LE90ZLR4P							
	52	275	27.70	4 270	0.8	27	**2KJ3504 - ■ EM23 - ■ ■ R1**	
	54	265	26.89	4 290	0.83	27	**2KJ3504 - ■ EM23 - ■ ■ Q1**	
	60	235	23.97	4 310	0.93	27	**2KJ3504 - ■ EM23 - ■ ■ P1**	
	65	215	22.12	4 320	1.0	27	**2KJ3504 - ■ EM23 - ■ ■ N1**	
	75	192	19.37	4 260	1.1	27	**2KJ3504 - ■ EM23 - ■ ■ M1**	
	85	168	16.98	4 220	1.3	27	**2KJ3504 - ■ EM23 - ■ ■ L1**	
	94	153	15.41	4 170	1.4	27	**2KJ3504 - ■ EM23 - ■ ■ K1**	
	100	144	14.50	4 140	1.5	27	**2KJ3504 - ■ EM23 - ■ ■ J1**	
	113	127	12.78	4 070	1.7	27	**2KJ3504 - ■ EM23 - ■ ■ H1**	
	130	110	11.09	3 980	2.0	27	**2KJ3504 - ■ EM23 - ■ ■ G1**	
	144	100	10.04	3 770	1.8	27	**2KJ3504 - ■ EM23 - ■ ■ F1**	

Article No. supplement		
Shaft design	**1, 5, 6, 7 or 9**	➞ page 10/44
Frequency and voltage	**2 or 9**	➞ page 11/2
Gearbox mounting type	**A, D, F or H**	➞ page 10/37

© Siemens AG 2017

Selection and ordering data (continued)

P_{rated} kW	n_2 rpm	T_2 Nm	i -	F_{R2} N	f_B -	m kg	Article No. (Article No. supplement ➞ below)	Order code No. of poles
1.5	**K.39-LE90ZLR4P**							
	164	87	8.81	3 700	2.1	27	**2KJ3504 - ■ EM23 - ■ ■ E1**	
	181	79	7.99	3 640	2.2	27	**2KJ3504 - ■ EM23 - ■ ■ D1**	
	192	74	7.52	3 600	2.3	27	**2KJ3504 - ■ EM23 - ■ ■ C1**	
	218	66	6.63	3 500	2.4	27	**2KJ3504 - ■ EM23 - ■ ■ B1**	
	251	57	5.75	3 400	2.6	27	**2KJ3504 - ■ EM23 - ■ ■ A1**	
	B.39-LE90ZLR4P							
	46	305	31.11	6 980	0.81	26	**2KJ3502 - ■ EM23 - ■ ■ T1**	
	53	270	27.50	6 980	0.92	26	**2KJ3502 - ■ EM23 - ■ ■ S1**	
	58	245	25.00	6 980	1.0	26	**2KJ3502 - ■ EM23 - ■ ■ R1**	
	66	215	21.90	6 980	1.2	26	**2KJ3502 - ■ EM23 - ■ ■ Q1**	
	71	200	20.21	6 890	1.2	26	**2KJ3502 - ■ EM23 - ■ ■ P1**	
	81	177	17.90	6 730	1.4	26	**2KJ3502 - ■ EM23 - ■ ■ N1**	
	97	148	14.90	6 480	1.7	26	**2KJ3502 - ■ EM23 - ■ ■ M1**	
	103	139	14.02	6 390	1.8	26	**2KJ3502 - ■ EM23 - ■ ■ L1**	
	115	125	12.56	6 230	2.0	26	**2KJ3502 - ■ EM23 - ■ ■ K1**	
	135	106	10.69	6 000	2.3	26	**2KJ3502 - ■ EM23 - ■ ■ J1**	
	158	91	9.17	5 780	2.5	26	**2KJ3502 - ■ EM23 - ■ ■ H1**	
	183	78	7.89	5 560	2.8	26	**2KJ3502 - ■ EM23 - ■ ■ G1**	
	219	65	6.60	5 350	3.1	26	**2KJ3502 - ■ EM23 - ■ ■ F1**	
	233	62	6.21	5 260	3.2	26	**2KJ3502 - ■ EM23 - ■ ■ E1**	
	260	55	5.56	5 100	3.6	26	**2KJ3502 - ■ EM23 - ■ ■ D1**	
	305	47	4.74	4 870	4.3	26	**2KJ3502 - ■ EM23 - ■ ■ C1**	
	356	40	4.06	4 660	5.0	26	**2KJ3502 - ■ EM23 - ■ ■ B1**	
	B.29-LE90ZLR4P							
	413	35	3.50	4 450	5.5	26	**2KJ3502 - ■ EM23 - ■ ■ A1**	
	114	125	12.63	3 670	0.88	21	**2KJ3501 - ■ EM23 - ■ ■ N1**	
	126	114	11.46	3 620	0.97	21	**2KJ3501 - ■ EM23 - ■ ■ M1**	
	134	107	10.78	3 590	1.0	21	**2KJ3501 - ■ EM23 - ■ ■ L1**	
	152	94	9.51	3 520	1.2	21	**2KJ3501 - ■ EM23 - ■ ■ K1**	
	175	82	8.25	3 430	1.3	21	**2KJ3501 - ■ EM23 - ■ ■ J1**	
	184	78	7.84	3 320	0.96	21	**2KJ3501 - ■ EM23 - ■ ■ H1**	
	196	73	7.38	3 290	1.0	21	**2KJ3501 - ■ EM23 - ■ ■ G1**	
	222	64	6.51	3 220	1.2	21	**2KJ3501 - ■ EM23 - ■ ■ F1**	
	256	56	5.65	3 120	1.3	21	**2KJ3501 - ■ EM23 - ■ ■ E1**	
	285	50	5.07	3 120	1.5	21	**2KJ3501 - ■ EM23 - ■ ■ D1**	
	302	47	4.78	3 070	1.6	21	**2KJ3501 - ■ EM23 - ■ ■ C1**	
	343	42	4.21	2 970	1.8	21	**2KJ3501 - ■ EM23 - ■ ■ B1**	
	396	36	3.65	2 870	2.0	21	**2KJ3501 - ■ EM23 - ■ ■ A1**	
2.2	**K.149-LE112ZMKB6P**							
	4.1	5 130	237.03	65 000	1.6	254	**2KJ3513 - ■ GJ23 - ■ ■ J2**	**P01**
	4.8	4 390	202.86	65 000	1.8	254	**2KJ3513 - ■ GJ23 - ■ ■ H2**	**P01**
	5.1	4 130	190.92	65 000	1.9	254	**2KJ3513 - ■ GJ23 - ■ ■ G2**	**P01**
	5.4	3 870	178.97	65 000	2.1	254	**2KJ3513 - ■ GJ23 - ■ ■ F2**	**P01**
	K.129-LE112ZMKB6P							
	4.2	4 940	228.30	37 100	0.89	170	**2KJ3512 - ■ GJ23 - ■ ■ J2**	**P01**
	4.6	4 560	210.74	37 400	0.96	170	**2KJ3512 - ■ GJ23 - ■ ■ H2**	**P01**
	5.0	4 200	194.04	37 800	1.0	170	**2KJ3512 - ■ GJ23 - ■ ■ G2**	**P01**

Article No. supplement		
Shaft design	**1, 5, 6, 7 or 9**	➞ page 10/44
Frequency and voltage	**2 or 9**	➞ page 11/2
Gearbox mounting type	**A, D, F or H**	➞ page 10/37

© Siemens AG 2017

Selection and ordering data (continued)

P_{rated}	n_2	T_2	i	F_{R2}	f_B	m	Article No.	Order code
kW	rpm	Nm	-	N	-	kg	(Article No. supplement ➞ below)	No. of poles
2.2	**K.129-LE112ZMKB6P**							
	5.9	3 580	165.47	38 400	1.2	170	**2KJ3512 - ■ GJ23 - ■ ■ F2**	**P01**
	K.129-LE100ZLSA4P							
	6.4	3 270	228.30	38 700	1.3	170	**2KJ3512 - ■ FN23 - ■ ■ J2**	
	7.0	3 020	210.74	38 900	1.5	170	**2KJ3512 - ■ FN23 - ■ ■ H2**	
	7.5	2 780	194.04	39 200	1.6	170	**2KJ3512 - ■ FN23 - ■ ■ G2**	
	8.9	2 370	165.47	39 600	1.9	170	**2KJ3512 - ■ FN23 - ■ ■ F2**	
	9.4	2 230	155.74	39 700	2.0	170	**2KJ3512 - ■ FN23 - ■ ■ E2**	
	10	2 070	144.53	39 900	2.1	170	**2KJ3512 - ■ FN23 - ■ ■ D2**	
	K.109-LE112ZMKB6P							
	5.9	3 540	163.78	24 500	0.82	120	**2KJ3511 - ■ GJ23 - ■ ■ E2**	**P01**
	K.109-LE100ZLSA4P							
	6.8	3 100	216.65	24 500	0.93	119	**2KJ3511 - ■ FN23 - ■ ■ H2**	
	7.5	2 800	195.60	24 500	1.0	119	**2KJ3511 - ■ FN23 - ■ ■ G2**	
	8.3	2 540	177.43	24 500	1.1	119	**2KJ3511 - ■ FN23 - ■ ■ F2**	
	8.9	2 340	163.78	24 500	1.2	119	**2KJ3511 - ■ FN23 - ■ ■ E2**	
	9.8	2 130	148.88	24 500	1.4	119	**2KJ3511 - ■ FN23 - ■ ■ D2**	
	12	1 700	118.65	24 500	1.7	119	**2KJ3511 - ■ FN23 - ■ ■ B2**	
	12	1 800	126.07	24 500	1.6	119	**2KJ3511 - ■ FN23 - ■ ■ C2**	
	13	1 570	109.57	24 500	1.8	119	**2KJ3511 - ■ FN23 - ■ ■ A2**	
	15	1 390	97.49	24 500	2.1	119	**2KJ3511 - ■ FN23 - ■ ■ X1**	
	17	1 240	86.59	24 500	2.3	119	**2KJ3511 - ■ FN23 - ■ ■ W1**	
	K.89-LE100ZLSA4P							
	11	1 860	129.96	18 100	0.86	84	**2KJ3510 - ■ FN23 - ■ ■ D2**	
	13	1 560	109.04	18 100	1.0	84	**2KJ3510 - ■ FN23 - ■ ■ C2**	
	14	1 470	102.63	18 100	1.1	84	**2KJ3510 - ■ FN23 - ■ ■ B2**	
	16	1 350	94.16	18 100	1.2	84	**2KJ3510 - ■ FN23 - ■ ■ A2**	
	18	1 180	82.25	18 100	1.4	84	**2KJ3510 - ■ FN23 - ■ ■ X1**	
	20	1 050	73.64	18 100	1.5	84	**2KJ3510 - ■ FN23 - ■ ■ W1**	
	23	920	64.39	18 100	1.7	84	**2KJ3510 - ■ FN23 - ■ ■ V1**	
	27	790	55.27	18 100	2.0	84	**2KJ3510 - ■ FN23 - ■ ■ U1**	
	30	700	48.85	18 100	2.3	84	**2KJ3510 - ■ FN23 - ■ ■ T1**	
	35	595	41.54	18 100	2.6	84	**2KJ3510 - ■ FN23 - ■ ■ S1**	
	K.79-LE100ZLSA4P							
	22	935	65.47	13 700	0.87	63	**2KJ3508 - ■ FN23 - ■ ■ U1**	
	26	800	56.08	14 000	1.0	63	**2KJ3508 - ■ FN23 - ■ ■ T1**	
	30	705	49.31	14 200	1.2	63	**2KJ3508 - ■ FN23 - ■ ■ S1**	
	35	595	41.60	14 400	1.3	63	**2KJ3508 - ■ FN23 - ■ ■ R1**	
	40	520	36.26	14 400	1.5	63	**2KJ3508 - ■ FN23 - ■ ■ Q1**	
	45	470	32.78	14 400	1.7	63	**2KJ3508 - ■ FN23 - ■ ■ P1**	
	54	390	27.20	14 400	2.1	63	**2KJ3508 - ■ FN23 - ■ ■ N1**	
	57	365	25.60	14 400	2.1	63	**2KJ3508 - ■ FN23 - ■ ■ M1**	
	61	345	24.17	14 400	2.2	63	**2KJ3508 - ■ FN23 - ■ ■ L1**	
	71	295	20.57	14 400	2.5	63	**2KJ3508 - ■ FN23 - ■ ■ K1**	
	83	250	17.62	14 400	2.8	63	**2KJ3508 - ■ FN23 - ■ ■ J1**	
	95	220	15.49	14 400	3.1	63	**2KJ3508 - ■ FN23 - ■ ■ H1**	
	112	187	13.07	14 400	3.5	63	**2KJ3508 - ■ FN23 - ■ ■ G1**	
	139	151	10.51	14 400	3.0	63	**2KJ3508 - ■ FN23 - ■ ■ E1**	
	163	129	9.01	13 800	3.5	63	**2KJ3508 - ■ FN23 - ■ ■ D1**	

Article No. supplement		
Shaft design	**1, 5, 6, 7 or 9**	➞ page 10/44
Frequency and voltage	**2 or 9**	➞ page 11/2
Gearbox mounting type	**A, D, F or H**	➞ page 10/37

© Siemens AG 2017

Selection and ordering data (continued)

P_{rated}	n_2	T_2	i	F_{R2}	f_B	m	Article No.	Order code
kW	rpm	Nm	-	N	-	kg	(Article No. supplement ➞ below)	No. of poles
2.2	**K.79-LE100ZLSA4P**							
	185	114	7.92	13 300	4.0	63	**2KJ3508 - ■ FN23 - ■ ■ C1**	
	K.69-LE100ZLSA4P							
	32	645	45.14	7 110	0.93	57	**2KJ3507 - ■ FN23 - ■ ■ S1**	
	37	565	39.69	7 190	1.1	57	**2KJ3507 - ■ FN23 - ■ ■ R1**	
	44	480	33.48	7 180	1.2	57	**2KJ3507 - ■ FN23 - ■ ■ Q1**	
	50	415	29.18	7 170	1.3	57	**2KJ3507 - ■ FN23 - ■ ■ P1**	
	56	370	26.05	7 110	1.6	57	**2KJ3507 - ■ FN23 - ■ ■ N1**	
	60	350	24.52	7 060	1.7	57	**2KJ3507 - ■ FN23 - ■ ■ M1**	
	63	330	23.15	7 020	1.8	57	**2KJ3507 - ■ FN23 - ■ ■ L1**	
	74	280	19.70	6 890	2.0	57	**2KJ3507 - ■ FN23 - ■ ■ K1**	
	87	240	16.88	6 720	2.2	57	**2KJ3507 - ■ FN23 - ■ ■ J1**	
	99	210	14.84	6 580	2.4	57	**2KJ3507 - ■ FN23 - ■ ■ H1**	
	117	180	12.52	6 350	2.7	57	**2KJ3507 - ■ FN23 - ■ ■ G1**	
	134	156	10.91	6 180	3.0	57	**2KJ3507 - ■ FN23 - ■ ■ F1**	
	157	134	9.34	5 730	2.8	57	**2KJ3507 - ■ FN23 - ■ ■ E1**	
	183	115	8.01	5 550	3.2	57	**2KJ3507 - ■ FN23 - ■ ■ D1**	
	208	101	7.04	5 400	3.6	57	**2KJ3507 - ■ FN23 - ■ ■ C1**	
	247	85	5.94	5 190	4.0	57	**2KJ3507 - ■ FN23 - ■ ■ B1**	
	283	74	5.18	5 020	4.4	57	**2KJ3507 - ■ FN23 - ■ ■ A1**	
	K.49-LE100ZLSA4P							
	45	465	32.57	3 970	0.9	51	**2KJ3505 - ■ FN23 - ■ ■ R1**	
	52	400	28.05	4 110	1.0	51	**2KJ3505 - ■ FN23 - ■ ■ Q1**	
	56	375	26.30	4 150	1.1	51	**2KJ3505 - ■ FN23 - ■ ■ P1**	
	63	330	23.28	4 220	1.3	51	**2KJ3505 - ■ FN23 - ■ ■ N1**	
	76	275	19.38	4 240	1.5	51	**2KJ3505 - ■ FN23 - ■ ■ M1**	
	80	260	18.24	4 230	1.6	51	**2KJ3505 - ■ FN23 - ■ ■ L1**	
	90	230	16.34	4 240	1.8	51	**2KJ3505 - ■ FN23 - ■ ■ K1**	
	105	199	13.91	4 170	2.1	51	**2KJ3505 - ■ FN23 - ■ ■ J1**	
	123	171	11.93	4 100	2.5	51	**2KJ3505 - ■ FN23 - ■ ■ H1**	
	143	147	10.27	4 020	2.8	51	**2KJ3505 - ■ FN23 - ■ ■ G1**	
	150	140	9.75	3 910	2.0	51	**2KJ3505 - ■ FN23 - ■ ■ F1**	
	160	132	9.18	3 880	2.1	51	**2KJ3505 - ■ FN23 - ■ ■ E1**	
	178	118	8.22	3 810	2.2	51	**2KJ3505 - ■ FN23 - ■ ■ D1**	
	209	100	7.00	3 710	2.4	51	**2KJ3505 - ■ FN23 - ■ ■ C1**	
	244	86	6.00	3 600	2.6	51	**2KJ3505 - ■ FN23 - ■ ■ B1**	
	283	74	5.17	3 490	2.8	51	**2KJ3505 - ■ FN23 - ■ ■ A1**	
	B.49-LE100ZLSA4P							
	39	530	37.18	7 140	0.84	48	**2KJ3503 - ■ FN23 - ■ ■ W1**	
	44	475	33.33	7 130	0.94	48	**2KJ3503 - ■ FN23 - ■ ■ V1**	
	49	430	30.05	7 080	1.0	48	**2KJ3503 - ■ FN23 - ■ ■ U1**	
	53	395	27.74	7 050	1.1	48	**2KJ3503 - ■ FN23 - ■ ■ T1**	
	58	360	25.32	6 990	1.2	48	**2KJ3503 - ■ FN23 - ■ ■ S1**	
	70	300	21.01	6 820	1.5	48	**2KJ3503 - ■ FN23 - ■ ■ R1**	
	74	280	19.77	6 780	1.6	48	**2KJ3503 - ■ FN23 - ■ ■ Q1**	
	78	265	18.67	6 720	1.7	48	**2KJ3503 - ■ FN23 - ■ ■ P1**	
	92	225	15.89	6 540	2.0	48	**2KJ3503 - ■ FN23 - ■ ■ N1**	
	108	195	13.61	6 330	2.3	48	**2KJ3503 - ■ FN23 - ■ ■ M1**	

Article No. supplement		
Shaft design	**1, 5, 6, 7 or 9**	➞ page 10/44
Frequency and voltage	**2 or 9**	➞ page 11/2
Gearbox mounting type	**A, D, F or H**	➞ page 10/37

© Siemens AG 2017

Selection and ordering data (continued)

P_{rated}	n_2	T_2	i	F_{R2}	f_B	m	Article No.	Order code
kW	rpm	Nm	-	N	-	kg	(Article No. supplement ➞ below)	No. of poles
2.2	**B.49-LE100ZLSA4P**							
	122	172	11.97	6 170	2.6	48	**2KJ3503 - ■ FN23 - ■ ■ L1**	
	145	145	10.10	5 940	3.1	48	**2KJ3503 - ■ FN23 - ■ ■ K1**	
	166	126	8.80	5 760	3.6	48	**2KJ3503 - ■ FN23 - ■ ■ J1**	
	177	119	8.29	5 770	2.8	48	**2KJ3503 - ■ FN23 - ■ ■ H1**	
	188	112	7.80	5 680	3.0	48	**2KJ3503 - ■ FN23 - ■ ■ G1**	
	199	106	7.37	5 590	3.1	48	**2KJ3503 - ■ FN23 - ■ ■ F1**	
	234	90	6.27	5 360	3.7	48	**2KJ3503 - ■ FN23 - ■ ■ E1**	
	273	77	5.37	5 140	4.3	48	**2KJ3503 - ■ FN23 - ■ ■ D1**	
	310	68	4.72	4 960	4.9	48	**2KJ3503 - ■ FN23 - ■ ■ C1**	
	K.39-LE100ZLSA4P							
	86	240	16.98	3 540	0.9	41	**2KJ3504 - ■ FN23 - ■ ■ L1**	
	95	220	15.41	3 540	1.0	41	**2KJ3504 - ■ FN23 - ■ ■ K1**	
	101	205	14.50	3 570	1.1	41	**2KJ3504 - ■ FN23 - ■ ■ J1**	
	115	183	12.78	3 540	1.2	41	**2KJ3504 - ■ FN23 - ■ ■ H1**	
	132	159	11.09	3 520	1.4	41	**2KJ3504 - ■ FN23 - ■ ■ G1**	
	146	144	10.04	3 290	1.3	41	**2KJ3504 - ■ FN23 - ■ ■ F1**	
	166	126	8.81	3 270	1.4	41	**2KJ3504 - ■ FN23 - ■ ■ E1**	
	183	115	7.99	3 240	1.5	41	**2KJ3504 - ■ FN23 - ■ ■ D1**	
	195	108	7.52	3 220	1.6	41	**2KJ3504 - ■ FN23 - ■ ■ C1**	
	221	95	6.63	3 180	1.7	41	**2KJ3504 - ■ FN23 - ■ ■ B1**	
	255	82	5.75	3 120	1.8	41	**2KJ3504 - ■ FN23 - ■ ■ A1**	
	B.39-LE100ZLSA4P							
	67	310	21.90	6 230	0.80	41	**2KJ3502 - ■ FN23 - ■ ■ Q1**	
	72	290	20.21	6 160	0.86	41	**2KJ3502 - ■ FN23 - ■ ■ P1**	
	82	255	17.90	6 090	0.97	41	**2KJ3502 - ■ FN23 - ■ ■ N1**	
	98	210	14.90	5 960	1.2	41	**2KJ3502 - ■ FN23 - ■ ■ M1**	
	104	200	14.02	5 890	1.2	41	**2KJ3502 - ■ FN23 - ■ ■ L1**	
	117	180	12.56	5 780	1.4	41	**2KJ3502 - ■ FN23 - ■ ■ K1**	
	137	153	10.69	5 610	1.6	41	**2KJ3502 - ■ FN23 - ■ ■ J1**	
	160	132	9.17	5 430	1.7	41	**2KJ3502 - ■ FN23 - ■ ■ H1**	
	186	113	7.89	5 260	1.9	41	**2KJ3502 - ■ FN23 - ■ ■ G1**	
	222	95	6.60	5 120	2.1	41	**2KJ3502 - ■ FN23 - ■ ■ F1**	
	236	89	6.21	5 050	2.2	41	**2KJ3502 - ■ FN23 - ■ ■ E1**	
	263	80	5.56	4 900	2.5	41	**2KJ3502 - ■ FN23 - ■ ■ D1**	
	309	68	4.74	4 700	2.9	41	**2KJ3502 - ■ FN23 - ■ ■ C1**	
	361	58	4.06	4 510	3.4	41	**2KJ3502 - ■ FN23 - ■ ■ B1**	
	419	50	3.50	4 330	3.8	41	**2KJ3502 - ■ FN23 - ■ ■ A1**	
	B.29-LE100ZLSA4P							
	154	136	9.51	3 110	0.81	36	**2KJ3501 - ■ FN23 - ■ ■ K1**	
	178	118	8.25	3 080	0.93	36	**2KJ3501 - ■ FN23 - ■ ■ J1**	
	225	93	6.51	2 900	0.80	36	**2KJ3501 - ■ FN23 - ■ ■ F1**	
	259	81	5.65	2 850	0.93	36	**2KJ3501 - ■ FN23 - ■ ■ E1**	
	289	73	5.07	2 900	1.0	36	**2KJ3501 - ■ FN23 - ■ ■ D1**	
	306	69	4.78	2 860	1.1	36	**2KJ3501 - ■ FN23 - ■ ■ C1**	
	348	60	4.21	2 800	1.2	36	**2KJ3501 - ■ FN23 - ■ ■ B1**	
	401	52	3.65	2 720	1.4	36	**2KJ3501 - ■ FN23 - ■ ■ A1**	

Article No. supplement		
Shaft design	**1, 5, 6, 7 or 9**	➞ page 10/44
Frequency and voltage	**2 or 9**	➞ page 11/2
Gearbox mounting type	**A, D, F or H**	➞ page 10/37

© Siemens AG 2017

Selection and ordering data (continued)

P_{rated}	n_2	T_2	i	F_{R2}	f_B	m	Article No.	Order code
kW	rpm	Nm	-	N	-	kg	(Article No. supplement ➞ below)	No. of poles
3	**K.169-LE132SH6P**							
	4.3	6 590	223.30	70 000	2.0	446	**2KJ3514 - ■ HF23 - ■ ■ F2**	**P01**
	K.149-LE132SH6P							
	4.1	7 000	237.03	65 000	1.1	276	**2KJ3513 - ■ HF23 - ■ ■ J2**	**P01**
	4.8	5 990	202.86	65 000	1.3	276	**2KJ3513 - ■ HF23 - ■ ■ H2**	**P01**
	5.1	5 630	190.92	65 000	1.4	276	**2KJ3513 - ■ HF23 - ■ ■ G2**	**P01**
	5.4	5 280	178.97	65 000	1.5	276	**2KJ3513 - ■ HF23 - ■ ■ F2**	**P01**
	K.149-LE100ZLSB4P							
	6.1	4 660	237.03	65 000	1.7	253	**2KJ3513 - ■ FP23 - ■ ■ J2**	
	7.2	3 990	202.86	65 000	2.0	253	**2KJ3513 - ■ FP23 - ■ ■ H2**	
	7.6	3 750	190.92	65 000	2.1	253	**2KJ3513 - ■ FP23 - ■ ■ G2**	
	K.129-LE132SH6P							
	5.9	4 880	165.47	37 100	0.90	193	**2KJ3512 - ■ HF23 - ■ ■ F2**	**P01**
	K.129-LE100ZLSB4P							
	6.4	4 490	228.30	37 500	0.98	170	**2KJ3512 - ■ FP23 - ■ ■ J2**	
	6.9	4 150	210.74	37 800	1.1	170	**2KJ3512 - ■ FP23 - ■ ■ H2**	
	7.5	3 820	194.04	38 200	1.2	170	**2KJ3512 - ■ FP23 - ■ ■ G2**	
	8.8	3 250	165.47	38 700	1.4	170	**2KJ3512 - ■ FP23 - ■ ■ F2**	
	K.129-LE100ZLSB4P							
	9.3	3 060	155.74	38 900	1.4	170	**2KJ3512 - ■ FP23 - ■ ■ E2**	
	10	2 840	144.53	39 100	1.5	170	**2KJ3512 - ■ FP23 - ■ ■ D2**	
	11	2 510	127.77	39 400	1.7	170	**2KJ3512 - ■ FP23 - ■ ■ C2**	
	13	2 240	114.06	39 700	2.0	170	**2KJ3512 - ■ FP23 - ■ ■ B2**	
	14	2 020	102.64	39 900	2.2	170	**2KJ3512 - ■ FP23 - ■ ■ A2**	
	K.109-LE100ZLSB4P							
	8.2	3 490	177.43	24 500	0.83	119	**2KJ3511 - ■ FP23 - ■ ■ F2**	
	8.9	3 220	163.78	24 500	0.90	119	**2KJ3511 - ■ FP23 - ■ ■ E2**	
	9.8	2 930	148.88	24 500	0.99	119	**2KJ3511 - ■ FP23 - ■ ■ D2**	
	12	2 330	118.65	24 500	1.2	119	**2KJ3511 - ■ FP23 - ■ ■ B2**	
	12	2 480	126.07	24 500	1.2	119	**2KJ3511 - ■ FP23 - ■ ■ C2**	
	13	2 150	109.57	24 500	1.3	119	**2KJ3511 - ■ FP23 - ■ ■ A2**	
	15	1 920	97.49	24 500	1.5	119	**2KJ3511 - ■ FP23 - ■ ■ X1**	
	17	1 700	86.59	24 500	1.7	119	**2KJ3511 - ■ FP23 - ■ ■ W1**	
	19	1 520	77.51	24 500	1.9	119	**2KJ3511 - ■ FP23 - ■ ■ V1**	
	22	1 300	66.26	24 500	2.2	119	**2KJ3511 - ■ FP23 - ■ ■ U1**	
	K.89-LE100ZLSB4P							
	15	1 850	94.16	18 100	0.86	84	**2KJ3510 - ■ FP23 - ■ ■ A2**	
	18	1 620	82.25	18 100	0.99	84	**2KJ3510 - ■ FP23 - ■ ■ X1**	
	20	1 450	73.64	18 100	1.1	84	**2KJ3510 - ■ FP23 - ■ ■ W1**	
	23	1 260	64.39	18 100	1.3	84	**2KJ3510 - ■ FP23 - ■ ■ V1**	
	26	1 080	55.27	18 100	1.5	84	**2KJ3510 - ■ FP23 - ■ ■ U1**	
	30	960	48.85	18 100	1.7	84	**2KJ3510 - ■ FP23 - ■ ■ T1**	
	35	815	41.54	18 100	1.9	84	**2KJ3510 - ■ FP23 - ■ ■ S1**	
	37	770	39.29	18 100	2.1	84	**2KJ3510 - ■ FP23 - ■ ■ R1**	
	44	645	32.96	18 100	2.5	84	**2KJ3510 - ■ FP23 - ■ ■ Q1**	
	47	610	31.03	18 100	2.6	84	**2KJ3510 - ■ FP23 - ■ ■ P1**	
	K.79-LE100ZLSB4P							
	30	970	49.31	13 600	0.84	63	**2KJ3508 - ■ FP23 - ■ ■ S1**	
	35	815	41.60	13 900	0.98	63	**2KJ3508 - ■ FP23 - ■ ■ R1**	

Article No. supplement		
Shaft design	**1, 5, 6, 7 or 9**	➞ page 10/44
Frequency and voltage	**2 or 9**	➞ page 11/2
Gearbox mounting type	**A, D, F or H**	➞ page 10/37

© Siemens AG 2017

5

Selection and ordering data (continued)

P_{rated} kW	n_2 rpm	T_2 Nm	i -	F_{R2} N	f_B -	m kg	Article No. (Article No. supplement ➞ below)	Order code No. of poles
3	**K.79-LE100ZLSB4P**							
	40	710	36.26	14 100	1.1	63	**2KJ3508 - ■ FP23 - ■ ■ Q1**	
	44	645	32.78	14 300	1.3	63	**2KJ3508 - ■ FP23 - ■ ■ P1**	
	53	535	27.20	14 400	1.5	63	**2KJ3508 - ■ FP23 - ■ ■ N1**	
	57	500	25.60	14 400	1.6	63	**2KJ3508 - ■ FP23 - ■ ■ M1**	
	60	475	24.17	14 400	1.6	63	**2KJ3508 - ■ FP23 - ■ ■ L1**	
	71	405	20.57	14 400	1.8	63	**2KJ3508 - ■ FP23 - ■ ■ K1**	
	83	345	17.62	14 400	2.1	63	**2KJ3508 - ■ FP23 - ■ ■ J1**	
	94	305	15.49	14 400	2.3	63	**2KJ3508 - ■ FP23 - ■ ■ H1**	
	111	255	13.07	14 400	2.6	63	**2KJ3508 - ■ FP23 - ■ ■ G1**	
	128	220	11.39	14 400	2.9	63	**2KJ3508 - ■ FP23 - ■ ■ F1**	
	138	205	10.51	14 100	2.2	63	**2KJ3508 - ■ FP23 - ■ ■ E1**	
	161	177	9.01	13 500	2.5	63	**2KJ3508 - ■ FP23 - ■ ■ D1**	
	184	156	7.92	13 100	2.9	63	**2KJ3508 - ■ FP23 - ■ ■ C1**	
	218	132	6.68	12 600	3.5	63	**2KJ3508 - ■ FP23 - ■ ■ B1**	
	250	115	5.82	12 100	3.8	63	**2KJ3508 - ■ FP23 - ■ ■ A1**	
	K.69-LE100ZLSB4P							
	43	655	33.48	5 960	0.88	57	**2KJ3507 - ■ FP23 - ■ ■ Q1**	
	50	575	29.18	6 050	0.97	57	**2KJ3507 - ■ FP23 - ■ ■ P1**	
	56	510	26.05	6 140	1.2	57	**2KJ3507 - ■ FP23 - ■ ■ N1**	
	59	480	24.52	6 150	1.2	57	**2KJ3507 - ■ FP23 - ■ ■ M1**	
	63	455	23.15	6 150	1.3	57	**2KJ3507 - ■ FP23 - ■ ■ L1**	
	74	385	19.70	6 160	1.4	57	**2KJ3507 - ■ FP23 - ■ ■ K1**	
	86	330	16.88	6 100	1.6	57	**2KJ3507 - ■ FP23 - ■ ■ J1**	
	98	290	14.84	6 030	1.8	57	**2KJ3507 - ■ FP23 - ■ ■ H1**	
	116	245	12.52	5 910	2.0	57	**2KJ3507 - ■ FP23 - ■ ■ G1**	
	133	215	10.91	5 780	2.2	57	**2KJ3507 - ■ FP23 - ■ ■ F1**	
	156	184	9.34	5 300	2.0	57	**2KJ3507 - ■ FP23 - ■ ■ E1**	
	182	158	8.01	5 180	2.3	57	**2KJ3507 - ■ FP23 - ■ ■ D1**	
	207	139	7.04	5 070	2.6	57	**2KJ3507 - ■ FP23 - ■ ■ C1**	
	245	117	5.94	4 920	2.9	57	**2KJ3507 - ■ FP23 - ■ ■ B1**	
	281	102	5.18	4 790	3.2	57	**2KJ3507 - ■ FP23 - ■ ■ A1**	
	K.49-LE100ZLSB4P							
	55	515	26.30	3 070	0.81	51	**2KJ3505 - ■ FP23 - ■ ■ P1**	
	62	455	23.28	3 260	0.92	51	**2KJ3505 - ■ FP23 - ■ ■ N1**	
	75	380	19.38	3 440	1.1	51	**2KJ3505 - ■ FP23 - ■ ■ M1**	
	80	355	18.24	3 510	1.2	51	**2KJ3505 - ■ FP23 - ■ ■ L1**	
	89	320	16.34	3 550	1.3	51	**2KJ3505 - ■ FP23 - ■ ■ K1**	
	105	270	13.91	3 630	1.5	51	**2KJ3505 - ■ FP23 - ■ ■ J1**	
	122	235	11.93	3 610	1.8	51	**2KJ3505 - ■ FP23 - ■ ■ H1**	
	142	200	10.27	3 620	2.1	51	**2KJ3505 - ■ FP23 - ■ ■ G1**	
	149	192	9.75	3 490	1.4	51	**2KJ3505 - ■ FP23 - ■ ■ F1**	
	158	181	9.18	3 480	1.5	51	**2KJ3505 - ■ FP23 - ■ ■ E1**	
	177	162	8.22	3 460	1.6	51	**2KJ3505 - ■ FP23 - ■ ■ D1**	
	208	138	7.00	3 410	1.7	51	**2KJ3505 - ■ FP23 - ■ ■ C1**	
	242	118	6.00	3 350	1.9	51	**2KJ3505 - ■ FP23 - ■ ■ B1**	
	281	102	5.17	3 270	2.1	51	**2KJ3505 - ■ FP23 - ■ ■ A1**	

Article No. supplement		
Shaft design	**1, 5, 6, 7 or 9**	➞ page 10/44
Frequency and voltage	**2 or 9**	➞ page 11/2
Gearbox mounting type	**A, D, F or H**	➞ page 10/37

© Siemens AG 2017

Selection and ordering data (continued)

P_{rated}	n_2	T_2	i	F_{R2}	f_B	m	Article No.	Order code
kW	rpm	Nm	-	N	-	kg	(Article No. supplement ➞ below)	No. of poles
3	**B.49-LE100ZLSB4P**							
	52	545	27.74	6 070	0.82	48	**2KJ3503 - ■ FP23 - ■ ■ T1**	
	57	495	25.32	6 110	0.90	48	**2KJ3503 - ■ FP23 - ■ ■ S1**	
	69	410	21.01	6 110	1.1	48	**2KJ3503 - ■ FP23 - ■ ■ R1**	
	74	385	19.77	6 100	1.2	48	**2KJ3503 - ■ FP23 - ■ ■ Q1**	
	78	365	18.67	6 070	1.2	48	**2KJ3503 - ■ FP23 - ■ ■ P1**	
	92	310	15.89	5 990	1.4	48	**2KJ3503 - ■ FP23 - ■ ■ N1**	
	107	265	13.61	5 880	1.7	48	**2KJ3503 - ■ FP23 - ■ ■ M1**	
	122	235	11.97	5 760	1.9	48	**2KJ3503 - ■ FP23 - ■ ■ L1**	
	144	199	10.10	5 600	2.3	48	**2KJ3503 - ■ FP23 - ■ ■ K1**	
	165	173	8.80	5 460	2.6	48	**2KJ3503 - ■ FP23 - ■ ■ J1**	
	176	163	8.29	5 520	2.0	48	**2KJ3503 - ■ FP23 - ■ ■ H1**	
	187	154	7.80	5 450	2.1	48	**2KJ3503 - ■ FP23 - ■ ■ G1**	
	197	145	7.37	5 380	2.3	48	**2KJ3503 - ■ FP23 - ■ ■ F1**	
	232	123	6.27	5 180	2.7	48	**2KJ3503 - ■ FP23 - ■ ■ E1**	
	271	106	5.37	4 980	3.1	48	**2KJ3503 - ■ FP23 - ■ ■ D1**	
	308	93	4.72	4 820	3.6	48	**2KJ3503 - ■ FP23 - ■ ■ C1**	
	366	78	3.98	4 620	4.2	48	**2KJ3503 - ■ FP23 - ■ ■ B1**	
	419	68	3.47	4 450	4.8	48	**2KJ3503 - ■ FP23 - ■ ■ A1**	
	K.39-LE100ZLSB4P							
	114	250	12.78	2 950	0.87	41	**2KJ3504 - ■ FP23 - ■ ■ H1**	
	131	215	11.09	3 020	1.0	41	**2KJ3504 - ■ FP23 - ■ ■ G1**	
	145	198	10.04	2 730	0.93	41	**2KJ3504 - ■ FP23 - ■ ■ F1**	
	165	173	8.81	2 790	1.1	41	**2KJ3504 - ■ FP23 - ■ ■ E1**	
	182	157	7.99	2 810	1.1	41	**2KJ3504 - ■ FP23 - ■ ■ D1**	
	193	148	7.52	2 820	1.2	41	**2KJ3504 - ■ FP23 - ■ ■ C1**	
	219	131	6.63	2 810	1.2	41	**2KJ3504 - ■ FP23 - ■ ■ B1**	
	253	113	5.75	2 810	1.3	41	**2KJ3504 - ■ FP23 - ■ ■ A1**	
	B.39-LE100ZLSB4P							
	98	290	14.90	5 360	0.85	41	**2KJ3502 - ■ FP23 - ■ ■ M1**	
	104	275	14.02	5 330	0.91	41	**2KJ3502 - ■ FP23 - ■ ■ L1**	
	116	245	12.56	5 290	1.0	41	**2KJ3502 - ■ FP23 - ■ ■ K1**	
	136	210	10.69	5 180	1.1	41	**2KJ3502 - ■ FP23 - ■ ■ J1**	
	159	181	9.17	5 070	1.3	41	**2KJ3502 - ■ FP23 - ■ ■ H1**	
	184	155	7.89	4 950	1.4	41	**2KJ3502 - ■ FP23 - ■ ■ G1**	
	220	130	6.60	4 890	1.5	41	**2KJ3502 - ■ FP23 - ■ ■ F1**	
	234	122	6.21	4 830	1.6	41	**2KJ3502 - ■ FP23 - ■ ■ E1**	
	262	109	5.56	4 720	1.8	41	**2KJ3502 - ■ FP23 - ■ ■ D1**	
	307	93	4.74	4 540	2.1	41	**2KJ3502 - ■ FP23 - ■ ■ C1**	
	358	80	4.06	4 370	2.5	41	**2KJ3502 - ■ FP23 - ■ ■ B1**	
	416	69	3.50	4 210	2.8	41	**2KJ3502 - ■ FP23 - ■ ■ A1**	
	B.29-LE100ZLSB4P							
	346	83	4.21	2 600	0.89	36	**2KJ3501 - ■ FP23 - ■ ■ B1**	
	399	72	3.65	2 550	1.0	36	**2KJ3501 - ■ FP23 - ■ ■ A1**	
4	**K.169-LE132MJ6P**							
	4.3	8 790	223.30	70 000	1.5	451	**2KJ3514 - ■ HK23 - ■ ■ F2**	**P01**
	4.7	8 200	208.35	70 000	1.6	451	**2KJ3514 - ■ HK23 - ■ ■ E2**	**P01**
	5.2	7 290	185.23	70 000	1.8	451	**2KJ3514 - ■ HK23 - ■ ■ D2**	**P01**
	5.8	6 550	166.31	70 000	2.0	451	**2KJ3514 - ■ HK23 - ■ ■ C2**	**P01**

Article No. supplement		
Shaft design	**1, 5, 6, 7 or 9**	➞ page 10/44
Frequency and voltage	**2 or 9**	➞ page 11/2
Gearbox mounting type	**A, D, F or H**	➞ page 10/37

© Siemens AG 2017

5

Selection and ordering data (continued)

P_{rated}	n_2	T_2	i	F_{R2}	f_B	m	Article No.	Order code
kW	rpm	Nm	-	N	-	kg	(Article No. supplement ➞ below)	No. of poles
4	**K.149-LE132MJ6P**							
	4.1	9 330	237.03	65 000	0.86	281	**2KJ3513 - ■ HK23 - ■ ■ J2**	**P01**
	4.8	7 980	202.86	65 000	1.0	281	**2KJ3513 - ■ HK23 - ■ ■ H2**	**P01**
	5.1	7 510	190.92	65 000	1.1	281	**2KJ3513 - ■ HK23 - ■ ■ G2**	**P01**
	5.4	7 040	178.97	65 000	1.1	281	**2KJ3513 - ■ HK23 - ■ ■ F2**	**P01**
	K.149-LE112ZMKB4P							
	6.2	6 200	237.03	65 000	1.3	254	**2KJ3513 - ■ GJ23 - ■ ■ J2**	
	7.2	5 300	202.86	65 000	1.5	254	**2KJ3513 - ■ GJ23 - ■ ■ H2**	
	7.6	4 990	190.92	65 000	1.6	254	**2KJ3513 - ■ GJ23 - ■ ■ G2**	
	8.2	4 680	178.97	65 000	1.7	254	**2KJ3513 - ■ GJ23 - ■ ■ F2**	
	9.2	4 150	158.65	65 000	1.9	254	**2KJ3513 - ■ GJ23 - ■ ■ E2**	
	10	3 680	140.93	65 000	2.2	254	**2KJ3513 - ■ GJ23 - ■ ■ D2**	
	K.129-LE112ZMKB4P							
	6.9	5 510	210.74	36 500	0.80	170	**2KJ3512 - ■ GJ23 - ■ ■ H2**	
	7.5	5 070	194.04	36 900	0.87	170	**2KJ3512 - ■ GJ23 - ■ ■ G2**	
	8.8	4 320	165.47	37 700	1.0	170	**2KJ3512 - ■ GJ23 - ■ ■ F2**	
	9.4	4 070	155.74	37 900	1.1	170	**2KJ3512 - ■ GJ23 - ■ ■ E2**	
	10	3 780	144.53	38 200	1.2	170	**2KJ3512 - ■ GJ23 - ■ ■ D2**	
	11	3 340	127.77	38 600	1.3	170	**2KJ3512 - ■ GJ23 - ■ ■ C2**	
	13	2 980	114.06	39 000	1.5	170	**2KJ3512 - ■ GJ23 - ■ ■ B2**	
	14	2 680	102.64	39 300	1.6	170	**2KJ3512 - ■ GJ23 - ■ ■ A2**	
	16	2 330	89.09	39 600	1.9	170	**2KJ3512 - ■ GJ23 - ■ ■ X1**	
	18	2 090	80.12	39 900	2.1	170	**2KJ3512 - ■ GJ23 - ■ ■ W1**	
	21	1 830	70.03	40 000	2.4	170	**2KJ3512 - ■ GJ23 - ■ ■ V1**	
	K.109-LE112ZMKB4P							
	12	3 100	118.65	24 500	0.93	120	**2KJ3511 - ■ GJ23 - ■ ■ B2**	
	12	3 290	126.07	24 500	0.88	120	**2KJ3511 - ■ GJ23 - ■ ■ C2**	
	13	2 860	109.57	24 500	1.0	120	**2KJ3511 - ■ GJ23 - ■ ■ A2**	
	15	2 550	97.49	24 500	1.1	120	**2KJ3511 - ■ GJ23 - ■ ■ X1**	
	17	2 260	86.59	24 500	1.3	120	**2KJ3511 - ■ GJ23 - ■ ■ W1**	
	19	2 020	77.51	24 500	1.4	120	**2KJ3511 - ■ GJ23 - ■ ■ V1**	
	22	1 730	66.26	24 500	1.7	120	**2KJ3511 - ■ GJ23 - ■ ■ U1**	
	25	1 540	59.17	24 500	1.9	120	**2KJ3511 - ■ GJ23 - ■ ■ T1**	
	28	1 360	52.29	24 500	2.1	120	**2KJ3511 - ■ GJ23 - ■ ■ S1**	
	32	1 200	45.89	24 500	2.4	120	**2KJ3511 - ■ GJ23 - ■ ■ R1**	
	K.89-LE112ZMKB4P							
	20	1 920	73.64	18 100	0.83	84	**2KJ3510 - ■ GJ23 - ■ ■ W1**	
	23	1 680	64.39	18 100	0.95	84	**2KJ3510 - ■ GJ23 - ■ ■ V1**	
	26	1 440	55.27	18 100	1.1	84	**2KJ3510 - ■ GJ23 - ■ ■ U1**	
	30	1 270	48.85	18 100	1.3	84	**2KJ3510 - ■ GJ23 - ■ ■ T1**	
	35	1 080	41.54	18 100	1.4	84	**2KJ3510 - ■ GJ23 - ■ ■ S1**	
	37	1 020	39.29	18 100	1.6	84	**2KJ3510 - ■ GJ23 - ■ ■ R1**	
	44	860	32.96	18 100	1.9	84	**2KJ3510 - ■ GJ23 - ■ ■ Q1**	
	47	810	31.03	18 100	2.0	84	**2KJ3510 - ■ GJ23 - ■ ■ P1**	
	51	745	28.46	18 100	2.1	84	**2KJ3510 - ■ GJ23 - ■ ■ N1**	
	59	650	24.86	18 100	2.5	84	**2KJ3510 - ■ GJ23 - ■ ■ M1**	
	66	580	22.26	18 100	2.7	84	**2KJ3510 - ■ GJ23 - ■ ■ L1**	
	75	505	19.46	18 100	3.1	84	**2KJ3510 - ■ GJ23 - ■ ■ K1**	

Article No. supplement		
Shaft design	**1, 5, 6, 7 or 9**	➞ page 10/44
Frequency and voltage	**2 or 9**	➞ page 11/2
Gearbox mounting type	**A, D, F or H**	➞ page 10/37

© Siemens AG 2017

Selection and ordering data (continued)

P_{rated}	n_2	T_2	i	F_{R2}	f_B	m	Article No.	Order code
kW	rpm	Nm	-	N	-	kg	(Article No. supplement ➞ below)	No. of poles
4	**K.89-LE112ZMKB4P**							
	139	275	10.51	18 100	3.1	84	**2KJ3510 - ■ GJ23 - ■ ■ E1**	
	162	235	9.02	18 100	3.4	84	**2KJ3510 - ■ GJ23 - ■ ■ D1**	
	183	205	7.97	18 000	3.7	84	**2KJ3510 - ■ GJ23 - ■ ■ C1**	
	215	177	6.78	17 300	4.1	84	**2KJ3510 - ■ GJ23 - ■ ■ B1**	
	251	152	5.81	16 600	4.4	84	**2KJ3510 - ■ GJ23 - ■ ■ A1**	
	K.79-LE112ZMKB4P							
	40	945	36.26	13 700	0.81	64	**2KJ3508 - ■ GJ23 - ■ ■ Q1**	
	45	855	32.78	13 900	0.96	64	**2KJ3508 - ■ GJ23 - ■ ■ P1**	
	54	710	27.20	14 100	1.1	64	**2KJ3508 - ■ GJ23 - ■ ■ N1**	
	57	670	25.60	14 200	1.2	64	**2KJ3508 - ■ GJ23 - ■ ■ M1**	
	60	630	24.17	14 300	1.2	64	**2KJ3508 - ■ GJ23 - ■ ■ L1**	
	71	535	20.57	14 400	1.4	64	**2KJ3508 - ■ GJ23 - ■ ■ K1**	
	83	460	17.62	14 400	1.6	64	**2KJ3508 - ■ GJ23 - ■ ■ J1**	
	94	405	15.49	14 400	1.7	64	**2KJ3508 - ■ GJ23 - ■ ■ H1**	
	112	340	13.07	14 400	1.9	64	**2KJ3508 - ■ GJ23 - ■ ■ G1**	
	128	295	11.39	14 000	2.2	64	**2KJ3508 - ■ GJ23 - ■ ■ F1**	
	139	275	10.51	13 600	1.6	64	**2KJ3508 - ■ GJ23 - ■ ■ E1**	
	162	235	9.01	13 200	1.9	64	**2KJ3508 - ■ GJ23 - ■ ■ D1**	
	184	205	7.92	12 800	2.2	64	**2KJ3508 - ■ GJ23 - ■ ■ C1**	
	219	175	6.68	12 300	2.6	64	**2KJ3508 - ■ GJ23 - ■ ■ B1**	
	251	152	5.82	11 900	2.8	64	**2KJ3508 - ■ GJ23 - ■ ■ A1**	
	K.69-LE112ZMKB4P							
	56	680	26.05	4 910	0.88	58	**2KJ3507 - ■ GJ23 - ■ ■ N1**	
	60	640	24.52	5 000	0.93	58	**2KJ3507 - ■ GJ23 - ■ ■ M1**	
	63	605	23.15	5 070	0.97	58	**2KJ3507 - ■ GJ23 - ■ ■ L1**	
	74	515	19.70	5 220	1.1	58	**2KJ3507 - ■ GJ23 - ■ ■ K1**	
	86	440	16.88	5 310	1.2	58	**2KJ3507 - ■ GJ23 - ■ ■ J1**	
	98	385	14.84	5 350	1.3	58	**2KJ3507 - ■ GJ23 - ■ ■ H1**	
	117	325	12.52	5 330	1.5	58	**2KJ3507 - ■ GJ23 - ■ ■ G1**	
	134	285	10.91	5 270	1.6	58	**2KJ3507 - ■ GJ23 - ■ ■ F1**	
	156	240	9.34	4 790	1.5	58	**2KJ3507 - ■ GJ23 - ■ ■ E1**	
	182	210	8.01	4 710	1.7	58	**2KJ3507 - ■ GJ23 - ■ ■ D1**	
	207	184	7.04	4 660	2.0	58	**2KJ3507 - ■ GJ23 - ■ ■ C1**	
	246	155	5.94	4 570	2.2	58	**2KJ3507 - ■ GJ23 - ■ ■ B1**	
	282	136	5.18	4 480	2.4	58	**2KJ3507 - ■ GJ23 - ■ ■ A1**	
	K.49-LE112ZMKB4P							
	75	505	19.38	2 460	0.83	52	**2KJ3505 - ■ GJ23 - ■ ■ M1**	
	80	475	18.24	2 560	0.88	52	**2KJ3505 - ■ GJ23 - ■ ■ L1**	
	89	425	16.34	2 730	0.98	52	**2KJ3505 - ■ GJ23 - ■ ■ K1**	
	105	360	13.91	2 920	1.2	52	**2KJ3505 - ■ GJ23 - ■ ■ J1**	
	122	310	11.93	3 020	1.3	52	**2KJ3505 - ■ GJ23 - ■ ■ H1**	
	142	265	10.27	3 110	1.5	52	**2KJ3505 - ■ GJ23 - ■ ■ G1**	
	150	255	9.75	2 960	1.1	52	**2KJ3505 - ■ GJ23 - ■ ■ F1**	
	159	240	9.18	2 980	1.1	52	**2KJ3505 - ■ GJ23 - ■ ■ E1**	
	178	215	8.22	3 010	1.2	52	**2KJ3505 - ■ GJ23 - ■ ■ D1**	
	209	183	7.00	3 030	1.3	52	**2KJ3505 - ■ GJ23 - ■ ■ C1**	
	243	157	6.00	3 020	1.4	52	**2KJ3505 - ■ GJ23 - ■ ■ B1**	
	282	135	5.17	2 990	1.6	52	**2KJ3505 - ■ GJ23 - ■ ■ A1**	

Article No. supplement		
Shaft design	**1, 5, 6, 7 or 9**	➞ page 10/44
Frequency and voltage	**2 or 9**	➞ page 11/2
Gearbox mounting type	**A, D, F or H**	➞ page 10/37

© Siemens AG 2017

5

Selection and ordering data (continued)

P_{rated} kW	n_2 rpm	T_2 Nm	i -	F_{R2} N	f_B -	m kg	Article No. (Article No. supplement ➞ below)	Order code No. of poles
4	**B.49-LE112ZMKB4P**							
	69	550	21.01	5 170	0.82	49	**2KJ3503 - ■ GJ23 - ■ ■ R1**	
	74	515	19.77	5 230	0.87	49	**2KJ3503 - ■ GJ23 - ■ ■ Q1**	
	78	485	18.67	5 260	0.92	49	**2KJ3503 - ■ GJ23 - ■ ■ P1**	
	92	415	15.89	5 280	1.1	49	**2KJ3503 - ■ GJ23 - ■ ■ N1**	
	107	355	13.61	5 280	1.3	49	**2KJ3503 - ■ GJ23 - ■ ■ M1**	
	122	310	11.97	5 250	1.4	49	**2KJ3503 - ■ GJ23 - ■ ■ L1**	
	145	260	10.10	5 180	1.7	49	**2KJ3503 - ■ GJ23 - ■ ■ K1**	
	166	230	8.80	5 070	2.0	49	**2KJ3503 - ■ GJ23 - ■ ■ J1**	
	176	215	8.29	5 210	1.5	49	**2KJ3503 - ■ GJ23 - ■ ■ H1**	
	187	200	7.80	5 170	1.6	49	**2KJ3503 - ■ GJ23 - ■ ■ G1**	
	198	193	7.37	5 090	1.7	49	**2KJ3503 - ■ GJ23 - ■ ■ F1**	
	233	164	6.27	4 930	2.0	49	**2KJ3503 - ■ GJ23 - ■ ■ E1**	
	272	141	5.37	4 770	2.3	49	**2KJ3503 - ■ GJ23 - ■ ■ D1**	
	309	123	4.72	4 640	2.7	49	**2KJ3503 - ■ GJ23 - ■ ■ C1**	
	367	104	3.98	4 460	3.2	49	**2KJ3503 - ■ GJ23 - ■ ■ B1**	
	421	91	3.47	4 310	3.6	49	**2KJ3503 - ■ GJ23 - ■ ■ A1**	
	K.39-LE112ZMKB4P							
	183	205	7.99	2 300	0.84	45	**2KJ3504 - ■ GJ23 - ■ ■ D1**	
	194	197	7.52	2 300	0.87	45	**2KJ3504 - ■ GJ23 - ■ ■ C1**	
	220	173	6.63	2 370	0.93	45	**2KJ3504 - ■ GJ23 - ■ ■ B1**	
	254	150	5.75	2 420	1.0	45	**2KJ3504 - ■ GJ23 - ■ ■ A1**	
	B.39-LE112ZMKB4P							
	137	280	10.69	4 640	0.86	44	**2KJ3502 - ■ GJ23 - ■ ■ J1**	
	159	240	9.17	4 600	0.96	44	**2KJ3502 - ■ GJ23 - ■ ■ H1**	
	185	205	7.89	4 560	1.1	44	**2KJ3502 - ■ GJ23 - ■ ■ G1**	
	221	173	6.60	4 580	1.2	44	**2KJ3502 - ■ GJ23 - ■ ■ F1**	
	235	162	6.21	4 550	1.2	44	**2KJ3502 - ■ GJ23 - ■ ■ E1**	
	263	145	5.56	4 460	1.4	44	**2KJ3502 - ■ GJ23 - ■ ■ D1**	
	308	124	4.74	4 320	1.6	44	**2KJ3502 - ■ GJ23 - ■ ■ C1**	
	360	106	4.06	4 180	1.9	44	**2KJ3502 - ■ GJ23 - ■ ■ B1**	
	417	92	3.50	4 040	2.1	44	**2KJ3502 - ■ GJ23 - ■ ■ A1**	
5.5	**K.189-LE132ZMS6P**							
	4.9	10 800	199.51	104 000	1.8	683	**2KJ3515 - ■ HL23 - ■ ■ W1**	**P01**
	5.4	9 660	178.49	104 000	2.0	683	**2KJ3515 - ■ HL23 - ■ ■ V1**	**P01**
	K.169-LE132ZMS6P							
	4.3	12 000	223.30	70 000	1.1	453	**2KJ3514 - ■ HL23 - ■ ■ F2**	**P01**
	4.7	11 200	208.35	70 000	1.2	453	**2KJ3514 - ■ HL23 - ■ ■ E2**	**P01**
	5.2	10 000	185.23	70 000	1.3	453	**2KJ3514 - ■ HL23 - ■ ■ D2**	**P01**
	5.8	9 000	166.31	70 000	1.4	453	**2KJ3514 - ■ HL23 - ■ ■ C2**	**P01**
	6.4	8 150	150.55	70 000	1.6	453	**2KJ3514 - ■ HL23 - ■ ■ B2**	**P01**
	6.6	8 000	223.30	70 000	1.6	453	**2KJ3514 - ■ HJ23 - ■ ■ F2**	**P01**
	7.0	7 470	208.35	70 000	1.7	453	**2KJ3514 - ■ HJ23 - ■ ■ E2**	**P01**
	7.9	6 640	185.23	70 000	2.0	453	**2KJ3514 - ■ HJ23 - ■ ■ D2**	**P01**
	K.149-LE132ZMS6P							
	5.4	9 690	178.97	65 000	0.83	283	**2KJ3513 - ■ HL23 - ■ ■ F2**	**P01**
	K.149-LE132ZST4P							
	6.2	8 490	237.03	65 000	0.94	283	**2KJ3513 - ■ HJ23 - ■ ■ J2**	
	7.2	7 270	202.86	65 000	1.1	283	**2KJ3513 - ■ HJ23 - ■ ■ H2**	

Article No. supplement		
Shaft design	**1, 5, 6, 7 or 9**	➞ page 10/44
Frequency and voltage	**2 or 9**	➞ page 11/2
Gearbox mounting type	**A, D, F or H**	➞ page 10/37

© Siemens AG 2017

Selection and ordering data (continued)

P_{rated}	n_2	T_2	i	F_{R2}	f_B	m	Article No.	Order code
kW	rpm	Nm	-	N	-	kg	(Article No. supplement ➞ below)	No. of poles
5.5	**K.149-LE132ZST4P**							
	7.7	6 840	190.92	65 000	1.2	283	**2KJ3513 - ■ HJ23 - ■ ■ G2**	
	8.2	6 410	178.97	65 000	1.2	283	**2KJ3513 - ■ HJ23 - ■ ■ F2**	
	9.2	5 680	158.65	65 000	1.4	283	**2KJ3513 - ■ HJ23 - ■ ■ E2**	
	10	5 050	140.93	65 000	1.6	283	**2KJ3513 - ■ HJ23 - ■ ■ D2**	
	12	4 550	127.16	65 000	1.8	283	**2KJ3513 - ■ HJ23 - ■ ■ C2**	
	13	4 040	112.68	65 000	2.0	283	**2KJ3513 - ■ HJ23 - ■ ■ B2**	
	15	3 570	99.79	65 000	2.2	283	**2KJ3513 - ■ HJ23 - ■ ■ A2**	
	K.129-LE132ZST4P							
	10	5 180	144.53	36 800	0.85	200	**2KJ3512 - ■ HJ23 - ■ ■ D2**	
	11	4 580	127.77	37 400	0.96	200	**2KJ3512 - ■ HJ23 - ■ ■ C2**	
	13	4 080	114.06	37 900	1.1	200	**2KJ3512 - ■ HJ23 - ■ ■ B2**	
	14	3 680	102.64	38 300	1.2	200	**2KJ3512 - ■ HJ23 - ■ ■ A2**	
	16	3 190	89.09	38 800	1.4	200	**2KJ3512 - ■ HJ23 - ■ ■ X1**	
	18	2 870	80.12	39 100	1.5	200	**2KJ3512 - ■ HJ23 - ■ ■ W1**	
	21	2 510	70.03	39 400	1.8	200	**2KJ3512 - ■ HJ23 - ■ ■ V1**	
	23	2 240	62.49	39 700	2.0	200	**2KJ3512 - ■ HJ23 - ■ ■ U1**	
	27	1 970	55.05	40 000	2.2	200	**2KJ3512 - ■ HJ23 - ■ ■ T1**	
	30	1 730	48.24	40 000	2.5	200	**2KJ3512 - ■ HJ23 - ■ ■ S1**	
	K.109-LE132ZST4P							
	15	3 490	97.49	24 500	0.83	151	**2KJ3511 - ■ HJ23 - ■ ■ X1**	
	17	3 100	86.59	24 500	0.93	151	**2KJ3511 - ■ HJ23 - ■ ■ W1**	
	19	2 770	77.51	24 500	1.0	151	**2KJ3511 - ■ HJ23 - ■ ■ V1**	
	22	2 370	66.26	24 500	1.2	151	**2KJ3511 - ■ HJ23 - ■ ■ U1**	
	25	2 120	59.17	24 500	1.4	151	**2KJ3511 - ■ HJ23 - ■ ■ T1**	
	28	1 870	52.29	24 500	1.5	151	**2KJ3511 - ■ HJ23 - ■ ■ S1**	
	32	1 640	45.89	24 500	1.8	151	**2KJ3511 - ■ HJ23 - ■ ■ R1**	
	37	1 430	39.95	24 500	2.0	151	**2KJ3511 - ■ HJ23 - ■ ■ Q1**	
	43	1 220	34.15	24 500	2.2	151	**2KJ3511 - ■ HJ23 - ■ ■ P1**	
	50	1 040	29.23	24 500	2.5	151	**2KJ3511 - ■ HJ23 - ■ ■ N1**	
	59	895	24.98	24 500	2.7	151	**2KJ3511 - ■ HJ23 - ■ ■ M1**	
	66	800	22.31	24 500	3.0	151	**2KJ3511 - ■ HJ23 - ■ ■ L1**	
	140	375	10.45	21 400	3.4	151	**2KJ3511 - ■ HJ23 - ■ ■ E1**	
	160	325	9.17	20 700	3.9	151	**2KJ3511 - ■ HJ23 - ■ ■ D1**	
	K.89-LE132ZST4P							
	27	1 980	55.27	18 100	0.81	115	**2KJ3510 - ■ HJ23 - ■ ■ U1**	
	30	1 750	48.85	18 100	0.91	115	**2KJ3510 - ■ HJ23 - ■ ■ T1**	
	35	1 480	41.54	18 100	1.1	115	**2KJ3510 - ■ HJ23 - ■ ■ S1**	
	37	1 400	39.29	18 100	1.1	115	**2KJ3510 - ■ HJ23 - ■ ■ R1**	
	44	1 180	32.96	18 100	1.4	115	**2KJ3510 - ■ HJ23 - ■ ■ Q1**	
	47	1 110	31.03	18 100	1.4	115	**2KJ3510 - ■ HJ23 - ■ ■ P1**	
	51	1 020	28.46	18 100	1.6	115	**2KJ3510 - ■ HJ23 - ■ ■ N1**	
	59	890	24.86	18 100	1.8	115	**2KJ3510 - ■ HJ23 - ■ ■ M1**	
	66	795	22.26	18 100	2.0	115	**2KJ3510 - ■ HJ23 - ■ ■ L1**	
	75	695	19.46	18 100	2.2	115	**2KJ3510 - ■ HJ23 - ■ ■ K1**	
	88	595	16.71	18 100	2.5	115	**2KJ3510 - ■ HJ23 - ■ ■ J1**	
	99	530	14.77	18 100	2.7	115	**2KJ3510 - ■ HJ23 - ■ ■ H1**	
	117	450	12.56	18 100	3.0	115	**2KJ3510 - ■ HJ23 - ■ ■ G1**	

Article No. supplement		
Shaft design	**1, 5, 6, 7 or 9**	➞ page 10/44
Frequency and voltage	**2 or 9**	➞ page 11/2
Gearbox mounting type	**A, D, F or H**	➞ page 10/37

© Siemens AG 2017

5

Selection and ordering data (continued)

P_{rated} kW	n_2 rpm	T_2 Nm	i -	F_{R2} N	f_B -	m kg	Article No. (Article No. supplement ➞ below)	Order code No. of poles
5.5	**K.89-LE132ZST4P**							
	136	385	10.76	18 100	3.2	115	**2KJ3510 - ■ HJ23 - ■ ■ F1**	
	139	375	10.51	18 100	2.2	115	**2KJ3510 - ■ HJ23 - ■ ■ E1**	
	162	320	9.02	18 100	2.5	115	**2KJ3510 - ■ HJ23 - ■ ■ D1**	
	184	285	7.97	17 500	2.7	115	**2KJ3510 - ■ HJ23 - ■ ■ C1**	
	216	240	6.78	16 900	3.0	115	**2KJ3510 - ■ HJ23 - ■ ■ B1**	
	252	205	5.81	16 300	3.2	115	**2KJ3510 - ■ HJ23 - ■ ■ A1**	
	K.79-LE132ZST4P							
	54	975	27.20	13 600	0.82	94	**2KJ3508 - ■ HJ23 - ■ ■ N1**	
	57	915	25.60	13 700	0.86	94	**2KJ3508 - ■ HJ23 - ■ ■ M1**	
	61	865	24.17	13 800	0.89	94	**2KJ3508 - ■ HJ23 - ■ ■ L1**	
	71	735	20.57	14 100	1.0	94	**2KJ3508 - ■ HJ23 - ■ ■ K1**	
	83	630	17.62	14 300	1.1	94	**2KJ3508 - ■ HJ23 - ■ ■ J1**	
	95	555	15.49	14 000	1.3	94	**2KJ3508 - ■ HJ23 - ■ ■ H1**	
	112	465	13.07	13 700	1.4	94	**2KJ3508 - ■ HJ23 - ■ ■ G1**	
	129	405	11.39	13 300	1.6	94	**2KJ3508 - ■ HJ23 - ■ ■ F1**	
	139	375	10.51	13 000	1.2	94	**2KJ3508 - ■ HJ23 - ■ ■ E1**	
	163	320	9.01	12 600	1.4	94	**2KJ3508 - ■ HJ23 - ■ ■ D1**	
	185	280	7.92	12 300	1.6	94	**2KJ3508 - ■ HJ23 - ■ ■ C1**	
	219	235	6.68	11 900	1.9	94	**2KJ3508 - ■ HJ23 - ■ ■ B1**	
	252	205	5.82	11 500	2.1	94	**2KJ3508 - ■ HJ23 - ■ ■ A1**	
	K.69-LE132ZST4P							
	87	605	16.88	4 120	0.88	88	**2KJ3507 - ■ HJ23 - ■ ■ J1**	
	99	530	14.84	4 300	0.97	88	**2KJ3507 - ■ HJ23 - ■ ■ H1**	
	117	445	12.52	4 460	1.1	88	**2KJ3507 - ■ HJ23 - ■ ■ G1**	
	134	390	10.91	4 510	1.2	88	**2KJ3507 - ■ HJ23 - ■ ■ F1**	
	157	335	9.34	3 930	1.1	88	**2KJ3507 - ■ HJ23 - ■ ■ E1**	
	183	285	8.01	4 030	1.3	88	**2KJ3507 - ■ HJ23 - ■ ■ D1**	
	208	250	7.04	4 060	1.4	88	**2KJ3507 - ■ HJ23 - ■ ■ C1**	
	247	210	5.94	4 080	1.6	88	**2KJ3507 - ■ HJ23 - ■ ■ B1**	
	283	186	5.18	4 020	1.8	88	**2KJ3507 - ■ HJ23 - ■ ■ A1**	
	K.49-LE132ZST4P							
	105	495	13.91	1 860	0.84	82	**2KJ3505 - ■ HJ23 - ■ ■ J1**	
	123	425	11.93	2 120	0.98	82	**2KJ3505 - ■ HJ23 - ■ ■ H1**	
	143	365	10.27	2 320	1.1	82	**2KJ3505 - ■ HJ23 - ■ ■ G1**	
	160	325	9.18	2 270	0.82	82	**2KJ3505 - ■ HJ23 - ■ ■ E1**	
	178	295	8.22	2 340	0.87	82	**2KJ3505 - ■ HJ23 - ■ ■ D1**	
	209	250	7.00	2 460	0.96	82	**2KJ3505 - ■ HJ23 - ■ ■ C1**	
	244	215	6.00	2 530	1.0	82	**2KJ3505 - ■ HJ23 - ■ ■ B1**	
	283	185	5.17	2 570	1.1	82	**2KJ3505 - ■ HJ23 - ■ ■ A1**	
	B.49-LE132ZST4P							
	108	485	13.61	4 400	0.92	79	**2KJ3503 - ■ HJ23 - ■ ■ M1**	
	122	425	11.97	4 480	1.0	79	**2KJ3503 - ■ HJ23 - ■ ■ L1**	
	145	360	10.10	4 510	1.2	79	**2KJ3503 - ■ HJ23 - ■ ■ K1**	
	166	315	8.80	4 500	1.4	79	**2KJ3503 - ■ HJ23 - ■ ■ J1**	
	177	295	8.29	4 730	1.1	79	**2KJ3503 - ■ HJ23 - ■ ■ H1**	
	188	280	7.80	4 690	1.2	79	**2KJ3503 - ■ HJ23 - ■ ■ G1**	
	199	260	7.37	4 690	1.2	79	**2KJ3503 - ■ HJ23 - ■ ■ F1**	

Article No. supplement		
Shaft design	**1, 5, 6, 7 or 9**	➞ page 10/44
Frequency and voltage	**2 or 9**	➞ page 11/2
Gearbox mounting type	**A, D, F or H**	➞ page 10/37

© Siemens AG 2017

Selection and ordering data (continued)

P_{rated}	n_2	T_2	i	F_{R2}	f_B	m	Article No.	Order code
kW	rpm	Nm	-	N	-	kg	(Article No. supplement ➞ below)	No. of poles
5.5	**B.49-LE132ZST4P**							
	234	225	6.27	4 570	1.5	79	**2KJ3503 - ■ HJ23 - ■ ■ E1**	
	273	193	5.37	4 460	1.7	79	**2KJ3503 - ■ HJ23 - ■ ■ D1**	
	310	169	4.72	4 360	2.0	79	**2KJ3503 - ■ HJ23 - ■ ■ C1**	
	368	143	3.98	4 220	2.3	79	**2KJ3503 - ■ HJ23 - ■ ■ B1**	
	422	124	3.47	4 110	2.6	79	**2KJ3503 - ■ HJ23 - ■ ■ A1**	
7.5	**K.189-LE132ZMS4P**							
	7.4	9 720	199.51	104 000	2.0	683	**2KJ3515 - ■ HL23 - ■ ■ W1**	
	K.169-LE132ZMS4P							
	6.6	10 800	223.30	70 000	1.2	453	**2KJ3514 - ■ HL23 - ■ ■ F2**	
	7.1	10 100	208.35	70 000	1.3	453	**2KJ3514 - ■ HL23 - ■ ■ E2**	
	7.9	9 020	185.23	70 000	1.4	453	**2KJ3514 - ■ HL23 - ■ ■ D2**	
	8.8	8 100	166.31	70 000	1.6	453	**2KJ3514 - ■ HL23 - ■ ■ C2**	
	9.8	7 330	150.55	70 000	1.8	453	**2KJ3514 - ■ HL23 - ■ ■ B2**	
	11	6 440	132.24	70 000	2.0	453	**2KJ3514 - ■ HL23 - ■ ■ A2**	
	12	5 830	119.83	70 000	2.2	453	**2KJ3514 - ■ HL23 - ■ ■ X1**	
	K.149-LE132ZMS4P							
	7.2	9 880	202.86	65 000	0.81	283	**2KJ3513 - ■ HL23 - ■ ■ H2**	
	7.7	9 300	190.92	65 000	0.86	283	**2KJ3513 - ■ HL23 - ■ ■ G2**	
	8.2	8 720	178.97	65 000	0.92	283	**2KJ3513 - ■ HL23 - ■ ■ F2**	
	9.3	7 730	158.65	65 000	1.0	283	**2KJ3513 - ■ HL23 - ■ ■ E2**	
	10	6 860	140.93	65 000	1.2	283	**2KJ3513 - ■ HL23 - ■ ■ D2**	
	12	6 190	127.16	65 000	1.3	283	**2KJ3513 - ■ HL23 - ■ ■ C2**	
	13	5 490	112.68	65 000	1.5	283	**2KJ3513 - ■ HL23 - ■ ■ B2**	
	15	4 860	99.79	64 000	1.6	283	**2KJ3513 - ■ HL23 - ■ ■ A2**	
	17	4 320	88.81	62 900	1.8	283	**2KJ3513 - ■ HL23 - ■ ■ X1**	
	18	3 870	79.59	61 700	2.1	283	**2KJ3513 - ■ HL23 - ■ ■ W1**	
	21	3 430	70.56	60 400	2.3	283	**2KJ3513 - ■ HL23 - ■ ■ V1**	
	K.129-LE132ZMS4P							
	14	5 000	102.64	37 000	0.88	200	**2KJ3512 - ■ HL23 - ■ ■ A2**	
	17	4 340	89.09	37 700	1.0	200	**2KJ3512 - ■ HL23 - ■ ■ X1**	
	18	3 900	80.12	38 100	1.1	200	**2KJ3512 - ■ HL23 - ■ ■ W1**	
	21	3 410	70.03	38 600	1.3	200	**2KJ3512 - ■ HL23 - ■ ■ V1**	
	24	3 040	62.49	38 900	1.4	200	**2KJ3512 - ■ HL23 - ■ ■ U1**	
	27	2 680	55.05	39 300	1.6	200	**2KJ3512 - ■ HL23 - ■ ■ T1**	
	30	2 350	48.24	39 200	1.9	200	**2KJ3512 - ■ HL23 - ■ ■ S1**	
	35	2 040	42.04	38 300	2.1	200	**2KJ3512 - ■ HL23 - ■ ■ R1**	
	38	1 870	38.37	37 700	2.4	200	**2KJ3512 - ■ HL23 - ■ ■ Q1**	
	45	1 600	33.03	36 700	2.7	200	**2KJ3512 - ■ HL23 - ■ ■ P1**	
	K.109-LE132ZMS4P							
	22	3 220	66.26	24 500	0.9	151	**2KJ3511 - ■ HL23 - ■ ■ U1**	
	25	2 880	59.17	24 500	1.0	151	**2KJ3511 - ■ HL23 - ■ ■ T1**	
	28	2 540	52.29	24 500	1.1	151	**2KJ3511 - ■ HL23 - ■ ■ S1**	
	32	2 230	45.89	24 500	1.3	151	**2KJ3511 - ■ HL23 - ■ ■ R1**	
	37	1 940	39.95	24 500	1.4	151	**2KJ3511 - ■ HL23 - ■ ■ Q1**	
	43	1 660	34.15	24 500	1.6	151	**2KJ3511 - ■ HL23 - ■ ■ P1**	
	50	1 420	29.23	24 500	1.8	151	**2KJ3511 - ■ HL23 - ■ ■ N1**	
	59	1 210	24.98	24 500	2	151	**2KJ3511 - ■ HL23 - ■ ■ M1**	
	66	1 080	22.31	24 500	2.2	151	**2KJ3511 - ■ HL23 - ■ ■ L1**	

Article No. supplement		
Shaft design	**1, 5, 6, 7 or 9**	➞ page 10/44
Frequency and voltage	**2 or 9**	➞ page 11/2
Gearbox mounting type	**A, D, F or H**	➞ page 10/37

© Siemens AG 2017

5

Selection and ordering data (continued)

P_{rated}	n_2	T_2	i	F_{R2}	f_B	m	Article No.	Order code
kW	rpm	Nm	-	N	-	kg	(Article No. supplement ➞ below)	No. of poles
7.5	**K.109-LE132ZMS4P**							
	75	960	19.71	24 200	2.5	151	**2KJ3511 - ■ HL23 - ■ ■ K1**	
	85	840	17.30	23 600	2.8	151	**2KJ3511 - ■ HL23 - ■ ■ J1**	
	98	730	15.06	22 900	3.1	151	**2KJ3511 - ■ HL23 - ■ ■ H1**	
	114	625	12.87	22 100	3.5	151	**2KJ3511 - ■ HL23 - ■ ■ G1**	
	141	505	10.45	20 800	2.5	151	**2KJ3511 - ■ HL23 - ■ ■ E1**	
	160	445	9.17	20 200	2.8	151	**2KJ3511 - ■ HL23 - ■ ■ D1**	
	184	385	7.99	19 500	3.3	151	**2KJ3511 - ■ HL23 - ■ ■ C1**	
	215	330	6.83	18 800	3.9	151	**2KJ3511 - ■ HL23 - ■ ■ B1**	
	252	285	5.84	18 100	4.6	151	**2KJ3511 - ■ HL23 - ■ ■ A1**	
	K.89-LE132ZMS4P							
	37	1 910	39.29	18 100	0.84	115	**2KJ3510 - ■ HL23 - ■ ■ R1**	
	45	1 600	32.96	18 100	1.0	115	**2KJ3510 - ■ HL23 - ■ ■ Q1**	
	47	1 510	31.03	18 100	1.1	115	**2KJ3510 - ■ HL23 - ■ ■ P1**	
	52	1 380	28.46	18 100	1.2	115	**2KJ3510 - ■ HL23 - ■ ■ N1**	
	59	1 210	24.86	18 100	1.3	115	**2KJ3510 - ■ HL23 - ■ ■ M1**	
	66	1 080	22.26	18 100	1.5	115	**2KJ3510 - ■ HL23 - ■ ■ L1**	
	76	945	19.46	18 100	1.6	115	**2KJ3510 - ■ HL23 - ■ ■ K1**	
	88	810	16.71	18 100	1.8	115	**2KJ3510 - ■ HL23 - ■ ■ J1**	
	100	720	14.77	18 100	2.0	115	**2KJ3510 - ■ HL23 - ■ ■ H1**	
	117	610	12.56	18 100	2.2	115	**2KJ3510 - ■ HL23 - ■ ■ G1**	
	137	520	10.76	18 100	2.4	115	**2KJ3510 - ■ HL23 - ■ ■ F1**	
	140	510	10.51	17 900	1.7	115	**2KJ3510 - ■ HL23 - ■ ■ E1**	
	163	435	9.02	17 400	1.8	115	**2KJ3510 - ■ HL23 - ■ ■ D1**	
	184	385	7.97	16 900	2.0	115	**2KJ3510 - ■ HL23 - ■ ■ C1**	
	217	330	6.78	16 400	2.2	115	**2KJ3510 - ■ HL23 - ■ ■ B1**	
	253	280	5.81	15 800	2.4	115	**2KJ3510 - ■ HL23 - ■ ■ A1**	
	K.79-LE132ZMS4P							
	83	855	17.62	12 900	0.83	94	**2KJ3508 - ■ HL23 - ■ ■ J1**	
	95	755	15.49	12 800	0.92	94	**2KJ3508 - ■ HL23 - ■ ■ H1**	
	112	635	13.07	12 700	1.0	94	**2KJ3508 - ■ HL23 - ■ ■ G1**	
	129	555	11.39	12 500	1.2	94	**2KJ3508 - ■ HL23 - ■ ■ F1**	
	140	510	10.51	12 100	0.87	94	**2KJ3508 - ■ HL23 - ■ ■ E1**	
	163	435	9.01	11 900	1.0	94	**2KJ3508 - ■ HL23 - ■ ■ D1**	
	186	385	7.92	11 600	1.2	94	**2KJ3508 - ■ HL23 - ■ ■ C1**	
	220	325	6.68	11 300	1.4	94	**2KJ3508 - ■ HL23 - ■ ■ B1**	
	253	280	5.82	11 100	1.5	94	**2KJ3508 - ■ HL23 - ■ ■ A1**	
	K.69-LE132ZMS4P							
	117	610	12.52	3 280	0.80	88	**2KJ3507 - ■ HL23 - ■ ■ G1**	
	135	530	10.91	3 510	0.88	88	**2KJ3507 - ■ HL23 - ■ ■ F1**	
	157	455	9.34	2 850	0.81	88	**2KJ3507 - ■ HL23 - ■ ■ E1**	
	184	390	8.01	3 080	0.94	88	**2KJ3507 - ■ HL23 - ■ ■ D1**	
	209	340	7.04	3 250	1.1	88	**2KJ3507 - ■ HL23 - ■ ■ C1**	
	247	285	5.94	3 400	1.2	88	**2KJ3507 - ■ HL23 - ■ ■ B1**	
	284	250	5.18	3 440	1.3	88	**2KJ3507 - ■ HL23 - ■ ■ A1**	
	K.49-LE132ZMS4P							
	143	500	10.27	1 260	0.83	82	**2KJ3505 - ■ HL23 - ■ ■ G1**	
	284	250	5.17	2 020	0.83	82	**2KJ3505 - ■ HL23 - ■ ■ A1**	

Article No. supplement		
Shaft design	**1, 5, 6, 7 or 9**	➞ page 10/44
Frequency and voltage	**2 or 9**	➞ page 11/2
Gearbox mounting type	**A, D, F or H**	➞ page 10/37

© Siemens AG 2017

Selection and ordering data (continued)

P_{rated}	n_2	T_2	i	F_{R2}	f_B	m	Article No.	Order code
kW	rpm	Nm	-	N	-	kg	(Article No. supplement ➞ below)	No. of poles
7.5	**B.49-LE132ZMS4P**							
	146	490	10.10	3 640	0.91	79	**2KJ3503 - ■ HL23 - ■ ■ K1**	
	167	425	8.80	3 760	1.0	79	**2KJ3503 - ■ HL23 - ■ ■ J1**	
	177	400	8.29	4 100	0.82	79	**2KJ3503 - ■ HL23 - ■ ■ H1**	
	188	380	7.80	4 090	0.87	79	**2KJ3503 - ■ HL23 - ■ ■ G1**	
	199	355	7.37	4 120	0.92	79	**2KJ3503 - ■ HL23 - ■ ■ F1**	
	234	305	6.27	4 090	1.1	79	**2KJ3503 - ■ HL23 - ■ ■ E1**	
	274	260	5.37	4 060	1.3	79	**2KJ3503 - ■ HL23 - ■ ■ D1**	
	311	230	4.72	4 000	1.4	79	**2KJ3503 - ■ HL23 - ■ ■ C1**	
	369	194	3.98	3 920	1.7	79	**2KJ3503 - ■ HL23 - ■ ■ B1**	
	424	169	3.47	3 840	1.9	79	**2KJ3503 - ■ HL23 - ■ ■ A1**	
9.2	**K.189-LE160MPA4P**							
	7.4	11 900	199.51	104 000	1.6	700	**2KJ3515 - ■ JQ23 - ■ ■ W1**	
	8.2	10 600	178.49	104 000	1.8	700	**2KJ3515 - ■ JQ23 - ■ ■ V1**	
	9.1	9 620	160.98	104 000	2.0	700	**2KJ3515 - ■ JQ23 - ■ ■ U1**	
	K.169-LE160MPA4P							
	6.6	13 300	223.30	70 000	0.97	469	**2KJ3514 - ■ JQ23 - ■ ■ F2**	
	7.1	12 400	208.35	70 000	1.0	469	**2KJ3514 - ■ JQ23 - ■ ■ E2**	
	7.9	11 000	185.23	70 000	1.2	469	**2KJ3514 - ■ JQ23 - ■ ■ D2**	
	8.8	9 940	166.31	70 000	1.3	469	**2KJ3514 - ■ JQ23 - ■ ■ C2**	
	9.8	8 990	150.55	70 000	1.4	469	**2KJ3514 - ■ JQ23 - ■ ■ B2**	
	11	7 900	132.24	70 000	1.6	469	**2KJ3514 - ■ JQ23 - ■ ■ A2**	
	12	7 160	119.83	70 000	1.8	469	**2KJ3514 - ■ JQ23 - ■ ■ X1**	
	14	6 370	106.72	70 000	2.0	469	**2KJ3514 - ■ JQ23 - ■ ■ W1**	
	K.149-LE160MPA4P							
	9.3	9 480	158.65	62 700	0.84	301	**2KJ3513 - ■ JQ23 - ■ ■ E2**	
	10	8 420	140.93	62 600	0.95	301	**2KJ3513 - ■ JQ23 - ■ ■ D2**	
	12	7 600	127.16	62 200	1.1	301	**2KJ3513 - ■ JQ23 - ■ ■ C2**	
	13	6 730	112.68	61 700	1.2	301	**2KJ3513 - ■ JQ23 - ■ ■ B2**	
	15	5 960	99.79	61 000	1.3	301	**2KJ3513 - ■ JQ23 - ■ ■ A2**	
	17	5 300	88.81	60 100	1.5	301	**2KJ3513 - ■ JQ23 - ■ ■ X1**	
	18	4 750	79.59	59 200	1.7	301	**2KJ3513 - ■ JQ23 - ■ ■ W1**	
	21	4 210	70.56	58 200	1.9	301	**2KJ3513 - ■ JQ23 - ■ ■ V1**	
	24	3 720	62.28	57 000	2.1	301	**2KJ3513 - ■ JQ23 - ■ ■ U1**	
	27	3 270	54.76	55 700	2.4	301	**2KJ3513 - ■ JQ23 - ■ ■ T1**	
	K.129-LE160MPA4P							
	17	5 320	89.09	36 700	0.83	218	**2KJ3512 - ■ JQ23 - ■ ■ X1**	
	18	4 780	80.12	37 200	0.92	218	**2KJ3512 - ■ JQ23 - ■ ■ W1**	
	21	4 180	70.03	37 800	1.1	218	**2KJ3512 - ■ JQ23 - ■ ■ V1**	
	24	3 730	62.49	38 200	1.2	218	**2KJ3512 - ■ JQ23 - ■ ■ U1**	
	27	3 290	55.05	37 900	1.3	218	**2KJ3512 - ■ JQ23 - ■ ■ T1**	
	30	2 880	48.24	37 400	1.5	218	**2KJ3512 - ■ JQ23 - ■ ■ S1**	
	35	2 510	42.04	36 700	1.8	218	**2KJ3512 - ■ JQ23 - ■ ■ R1**	
	38	2 290	38.37	36 300	1.9	218	**2KJ3512 - ■ JQ23 - ■ ■ Q1**	
	45	1 970	33.03	35 400	2.2	218	**2KJ3512 - ■ JQ23 - ■ ■ P1**	
	47	1 880	31.55	35 200	2.3	218	**2KJ3512 - ■ JQ23 - ■ ■ N1**	
	53	1 640	27.58	34 300	2.7	218	**2KJ3512 - ■ JQ23 - ■ ■ M1**	
	60	1 470	24.61	33 600	3.0	218	**2KJ3512 - ■ JQ23 - ■ ■ L1**	

Article No. supplement		
Shaft design	**1, 5, 6, 7 or 9**	➞ page 10/44
Frequency and voltage	**2 or 9**	➞ page 11/2
Gearbox mounting type	**A, D, F or H**	➞ page 10/37

© Siemens AG 2017

5

Selection and ordering data (continued)

P_{rated} kW	n_2 rpm	T_2 Nm	i -	F_{R2} N	f_B -	m kg	Article No. (Article No. supplement ➞ below)	Order code No. of poles
9.2	**K.109-LE160MPA4P**							
	25	3 530	59.17	24 500	0.82	170	**2KJ3511 - ■ JQ23 - ■ ■ T1**	
	28	3 120	52.29	24 500	0.93	170	**2KJ3511 - ■ JQ23 - ■ ■ S1**	
	32	2 740	45.89	24 500	1.1	170	**2KJ3511 - ■ JQ23 - ■ ■ R1**	
	37	2 380	39.95	24 500	1.2	170	**2KJ3511 - ■ JQ23 - ■ ■ Q1**	
	43	2 040	34.15	24 500	1.3	170	**2KJ3511 - ■ JQ23 - ■ ■ P1**	
	50	1 740	29.23	24 500	1.5	170	**2KJ3511 - ■ JQ23 - ■ ■ N1**	
	59	1 490	24.98	24 200	1.6	170	**2KJ3511 - ■ JQ23 - ■ ■ M1**	
	66	1 330	22.31	23 900	1.8	170	**2KJ3511 - ■ JQ23 - ■ ■ L1**	
	75	1 170	19.71	23 400	2.0	170	**2KJ3511 - ■ JQ23 - ■ ■ K1**	
	85	1 030	17.30	22 900	2.3	170	**2KJ3511 - ■ JQ23 - ■ ■ J1**	
	98	900	15.06	22 300	2.6	170	**2KJ3511 - ■ JQ23 - ■ ■ H1**	
	114	765	12.87	21 600	2.9	170	**2KJ3511 - ■ JQ23 - ■ ■ G1**	
	133	655	11.02	20 900	3.2	170	**2KJ3511 - ■ JQ23 - ■ ■ F1**	
	141	625	10.45	20 300	2.0	170	**2KJ3511 - ■ JQ23 - ■ ■ E1**	
	160	545	9.17	19 800	2.3	170	**2KJ3511 - ■ JQ23 - ■ ■ D1**	
	184	475	7.99	19 200	2.7	170	**2KJ3511 - ■ JQ23 - ■ ■ C1**	
	215	405	6.83	18 500	3.2	170	**2KJ3511 - ■ JQ23 - ■ ■ B1**	
	252	345	5.84	17 800	3.7	170	**2KJ3511 - ■ JQ23 - ■ ■ A1**	
	K.89-LE160MPA4P							
	45	1 970	32.96	18 100	0.81	133	**2KJ3510 - ■ JQ23 - ■ ■ Q1**	
	47	1 850	31.03	18 100	0.86	133	**2KJ3510 - ■ JQ23 - ■ ■ P1**	
	52	1 700	28.46	18 100	0.94	133	**2KJ3510 - ■ JQ23 - ■ ■ N1**	
	59	1 480	24.86	18 100	1.1	133	**2KJ3510 - ■ JQ23 - ■ ■ M1**	
	66	1 330	22.26	18 100	1.2	133	**2KJ3510 - ■ JQ23 - ■ ■ L1**	
	76	1 160	19.46	18 100	1.3	133	**2KJ3510 - ■ JQ23 - ■ ■ K1**	
	88	995	16.71	18 100	1.5	133	**2KJ3510 - ■ JQ23 - ■ ■ J1**	
	100	880	14.77	18 100	1.6	133	**2KJ3510 - ■ JQ23 - ■ ■ H1**	
	117	750	12.56	18 100	1.8	133	**2KJ3510 - ■ JQ23 - ■ ■ G1**	
	137	640	10.76	18 000	1.9	133	**2KJ3510 - ■ JQ23 - ■ ■ F1**	
	140	625	10.51	17 200	1.3	133	**2KJ3510 - ■ JQ23 - ■ ■ E1**	
	163	535	9.02	16 800	1.5	133	**2KJ3510 - ■ JQ23 - ■ ■ D1**	
	184	475	7.97	16 400	1.6	133	**2KJ3510 - ■ JQ23 - ■ ■ C1**	
	217	405	6.78	15 900	1.8	133	**2KJ3510 - ■ JQ23 - ■ ■ B1**	
	253	345	5.81	15 400	1.9	133	**2KJ3510 - ■ JQ23 - ■ ■ A1**	
11	**K.189-LE160MPB4P**							
	7.4	14 200	199.51	104 000	1.3	692	**2KJ3515 - ■ JR23 - ■ ■ W1**	
	8.3	12 700	178.49	104 000	1.5	692	**2KJ3515 - ■ JR23 - ■ ■ V1**	
	9.2	11 400	160.98	104 000	1.7	692	**2KJ3515 - ■ JR23 - ■ ■ U1**	
	10	10 100	142.28	104 000	1.9	692	**2KJ3515 - ■ JR23 - ■ ■ T1**	
	11	9 260	130.05	104 000	2.1	692	**2KJ3515 - ■ JR23 - ■ ■ S1**	
	K.169-LE160MPB4P							
	6.6	15 900	223.30	70 000	0.82	461	**2KJ3514 - ■ JR23 - ■ ■ F2**	
	7.1	14 800	208.35	70 000	0.88	461	**2KJ3514 - ■ JR23 - ■ ■ E2**	
	8	13 100	185.23	70 000	0.99	461	**2KJ3514 - ■ JR23 - ■ ■ D2**	
	8.9	11 800	166.31	70 000	1.1	461	**2KJ3514 - ■ JR23 - ■ ■ C2**	
	9.8	10 700	150.55	70 000	1.2	461	**2KJ3514 - ■ JR23 - ■ ■ B2**	
	11	9 410	132.24	70 000	1.4	461	**2KJ3514 - ■ JR23 - ■ ■ A2**	

Article No. supplement		
Shaft design	**1, 5, 6, 7 or 9**	➞ page 10/44
Frequency and voltage	**2 or 9**	➞ page 11/2
Gearbox mounting type	**A, D, F or H**	➞ page 10/37

© Siemens AG 2017

Selection and ordering data (continued)

P_{rated}	n_2	T_2	i	F_{R2}	f_B	m	Article No.	Order code
kW	rpm	Nm	-	N	-	kg	(Article No. supplement ➞ below)	No. of poles
11	**K.169-LE160MPB4P**							
	12	8 530	119.83	70 000	1.5	461	**2KJ3514 - ■ JR23 - ■ ■ X1**	
	14	7 600	106.72	70 000	1.7	461	**2KJ3514 - ■ JR23 - ■ ■ W1**	
	15	6 820	95.83	70 000	1.9	461	**2KJ3514 - ■ JR23 - ■ ■ V1**	
	17	6 090	85.51	70 000	2.1	461	**2KJ3514 - ■ JR23 - ■ ■ U1**	
	K.149-LE160MPB4P							
	10	10 000	140.93	58 100	0.80	293	**2KJ3513 - ■ JR23 - ■ ■ D2**	
	12	9 050	127.16	58 100	0.88	293	**2KJ3513 - ■ JR23 - ■ ■ C2**	
	13	8 020	112.68	58 000	1.0	293	**2KJ3513 - ■ JR23 - ■ ■ B2**	
	15	7 100	99.79	57 700	1.1	293	**2KJ3513 - ■ JR23 - ■ ■ A2**	
	17	6 320	88.81	57 200	1.3	293	**2KJ3513 - ■ JR23 - ■ ■ X1**	
	19	5 660	79.59	56 600	1.4	293	**2KJ3513 - ■ JR23 - ■ ■ W1**	
	21	5 020	70.56	55 900	1.6	293	**2KJ3513 - ■ JR23 - ■ ■ V1**	
	24	4 430	62.28	54 900	1.8	293	**2KJ3513 - ■ JR23 - ■ ■ U1**	
	27	3 900	54.76	53 900	2.1	293	**2KJ3513 - ■ JR23 - ■ ■ T1**	
	30	3 530	49.60	53 000	2.3	293	**2KJ3513 - ■ JR23 - ■ ■ S1**	
	34	3 070	43.18	51 700	2.6	293	**2KJ3513 - ■ JR23 - ■ ■ R1**	
	K.129-LE160MPB4P							
	21	4 980	70.03	35 800	0.88	210	**2KJ3512 - ■ JR23 - ■ ■ V1**	
	24	4 450	62.49	35 800	0.99	210	**2KJ3512 - ■ JR23 - ■ ■ U1**	
	27	3 920	55.05	35 700	1.1	210	**2KJ3512 - ■ JR23 - ■ ■ T1**	
	31	3 430	48.24	35 500	1.3	210	**2KJ3512 - ■ JR23 - ■ ■ S1**	
	35	2 990	42.04	35 100	1.5	210	**2KJ3512 - ■ JR23 - ■ ■ R1**	
	38	2 730	38.37	34 700	1.6	210	**2KJ3512 - ■ JR23 - ■ ■ Q1**	
	45	2 350	33.03	34 100	1.9	210	**2KJ3512 - ■ JR23 - ■ ■ P1**	
	47	2 240	31.55	33 900	2.0	210	**2KJ3512 - ■ JR23 - ■ ■ N1**	
	53	1 960	27.58	33 200	2.2	210	**2KJ3512 - ■ JR23 - ■ ■ M1**	
	60	1 750	24.61	32 600	2.5	210	**2KJ3512 - ■ JR23 - ■ ■ L1**	
	68	1 540	21.68	31 800	2.8	210	**2KJ3512 - ■ JR23 - ■ ■ K1**	
	78	1 350	19.00	31 100	3.1	210	**2KJ3512 - ■ JR23 - ■ ■ J1**	
	89	1 170	16.56	30 200	3.4	210	**2KJ3512 - ■ JR23 - ■ ■ H1**	
	125	840	11.80	28 000	3.4	210	**2KJ3512 - ■ JR23 - ■ ■ E1**	
	143	735	10.34	27 200	3.9	210	**2KJ3512 - ■ JR23 - ■ ■ D1**	
	K.109-LE160MPB4P							
	32	3 260	45.89	23 500	0.89	162	**2KJ3511 - ■ JR23 - ■ ■ R1**	
	37	2 840	39.95	23 600	0.99	162	**2KJ3511 - ■ JR23 - ■ ■ Q1**	
	43	2 430	34.15	23 600	1.1	162	**2KJ3511 - ■ JR23 - ■ ■ P1**	
	50	2 080	29.23	23 400	1.3	162	**2KJ3511 - ■ JR23 - ■ ■ N1**	
	59	1 770	24.98	23 200	1.3	162	**2KJ3511 - ■ JR23 - ■ ■ M1**	
	66	1 580	22.31	22 900	1.5	162	**2KJ3511 - ■ JR23 - ■ ■ L1**	
	75	1 400	19.71	22 500	1.7	162	**2KJ3511 - ■ JR23 - ■ ■ K1**	
	85	1 230	17.30	22 100	1.9	162	**2KJ3511 - ■ JR23 - ■ ■ J1**	
	98	1 070	15.06	21 600	2.2	162	**2KJ3511 - ■ JR23 - ■ ■ H1**	
	115	915	12.87	21 000	2.4	162	**2KJ3511 - ■ JR23 - ■ ■ G1**	
	134	785	11.02	20 400	2.7	162	**2KJ3511 - ■ JR23 - ■ ■ F1**	
	141	740	10.45	19 800	1.7	162	**2KJ3511 - ■ JR23 - ■ ■ E1**	
	161	650	9.17	19 300	1.9	162	**2KJ3511 - ■ JR23 - ■ ■ D1**	
	185	565	7.99	18 800	2.2	162	**2KJ3511 - ■ JR23 - ■ ■ C1**	

Article No. supplement		
Shaft design	**1, 5, 6, 7 or 9**	➞ page 10/44
Frequency and voltage	**2 or 9**	➞ page 11/2
Gearbox mounting type	**A, D, F or H**	➞ page 10/37

© Siemens AG 2017

5

Selection and ordering data (continued)

P_{rated} kW	n_2 rpm	T_2 Nm	i -	F_{R2} N	f_B -	m kg	Article No. (Article No. supplement ➞ below)	Order code No. of poles
11	**K.109-LE160MPB4P**							
	216	485	6.83	18 100	2.7	162	**2KJ3511 - ■ JR23 - ■ ■ B1**	
	253	415	5.84	17 500	3.1	162	**2KJ3511 - ■ JR23 - ■ ■ A1**	
	K.89-LE160MPB4P							
	59	1 770	24.86	18 100	0.9	125	**2KJ3510 - ■ JR23 - ■ ■ M1**	
	66	1 580	22.26	18 100	1.0	125	**2KJ3510 - ■ JR23 - ■ ■ L1**	
	76	1 380	19.46	18 100	1.1	125	**2KJ3510 - ■ JR23 - ■ ■ K1**	
	88	1 190	16.71	18 100	1.2	125	**2KJ3510 - ■ JR23 - ■ ■ J1**	
	100	1 050	14.77	18 100	1.3	125	**2KJ3510 - ■ JR23 - ■ ■ H1**	
	117	895	12.56	17 800	1.5	125	**2KJ3510 - ■ JR23 - ■ ■ G1**	
	137	765	10.76	17 400	1.6	125	**2KJ3510 - ■ JR23 - ■ ■ F1**	
	140	745	10.51	16 500	1.1	125	**2KJ3510 - ■ JR23 - ■ ■ E1**	
	164	640	9.02	16 200	1.2	125	**2KJ3510 - ■ JR23 - ■ ■ D1**	
	185	565	7.97	15 900	1.4	125	**2KJ3510 - ■ JR23 - ■ ■ C1**	
	218	480	6.78	15 500	1.5	125	**2KJ3510 - ■ JR23 - ■ ■ B1**	
	254	410	5.81	15 100	1.6	125	**2KJ3510 - ■ JR23 - ■ ■ A1**	
15	**K.189-LE160ZLL4P**							
	7.4	19 300	199.51	104 000	0.99	717	**2KJ3515 - ■ JU23 - ■ ■ W1**	
	8.3	17 300	178.49	104 000	1.1	717	**2KJ3515 - ■ JU23 - ■ ■ V1**	
	9.2	15 600	160.98	104 000	1.2	717	**2KJ3515 - ■ JU23 - ■ ■ U1**	
	10	13 800	142.28	104 000	1.4	717	**2KJ3515 - ■ JU23 - ■ ■ T1**	
	11	12 600	130.05	104 000	1.5	717	**2KJ3515 - ■ JU23 - ■ ■ S1**	
	13	11 300	117.00	104 000	1.7	717	**2KJ3515 - ■ JU23 - ■ ■ R1**	
	14	10 100	104.56	104 000	1.9	717	**2KJ3515 - ■ JU23 - ■ ■ Q1**	
	16	9 180	94.55	104 000	2.1	717	**2KJ3515 - ■ JU23 - ■ ■ P1**	
	K.169-LE160ZLL4P							
	8.9	16 100	166.31	70 000	0.80	486	**2KJ3514 - ■ JU23 - ■ ■ C2**	
	9.8	14 600	150.55	70 000	0.89	486	**2KJ3514 - ■ JU23 - ■ ■ B2**	
	11	12 800	132.24	70 000	1.0	486	**2KJ3514 - ■ JU23 - ■ ■ A2**	
	12	11 600	119.83	70 000	1.1	486	**2KJ3514 - ■ JU23 - ■ ■ X1**	
	14	10 300	106.72	70 000	1.3	486	**2KJ3514 - ■ JU23 - ■ ■ W1**	
	15	9 300	95.83	70 000	1.4	486	**2KJ3514 - ■ JU23 - ■ ■ V1**	
	17	8 300	85.51	70 000	1.6	486	**2KJ3514 - ■ JU23 - ■ ■ U1**	
	19	7 400	76.23	70 000	1.8	486	**2KJ3514 - ■ JU23 - ■ ■ T1**	
	22	6 560	67.61	70 000	2.0	486	**2KJ3514 - ■ JU23 - ■ ■ S1**	
	24	6 020	62.07	70 000	2.2	486	**2KJ3514 - ■ JU23 - ■ ■ R1**	
	27	5 310	54.68	70 000	2.4	486	**2KJ3514 - ■ JU23 - ■ ■ Q1**	
	K.149-LE160ZLL4P							
	15	9 690	99.79	50 500	0.83	318	**2KJ3513 - ■ JU23 - ■ ■ A2**	
	17	8 620	88.81	50 800	0.93	318	**2KJ3513 - ■ JU23 - ■ ■ X1**	
	19	7 730	79.59	50 800	1.0	318	**2KJ3513 - ■ JU23 - ■ ■ W1**	
	21	6 850	70.56	50 700	1.2	318	**2KJ3513 - ■ JU23 - ■ ■ V1**	
	24	6 040	62.28	50 400	1.3	318	**2KJ3513 - ■ JU23 - ■ ■ U1**	
	27	5 310	54.76	49 900	1.5	318	**2KJ3513 - ■ JU23 - ■ ■ T1**	
	30	4 810	49.60	49 400	1.7	318	**2KJ3513 - ■ JU23 - ■ ■ S1**	
	34	4 190	43.18	48 600	1.9	318	**2KJ3513 - ■ JU23 - ■ ■ R1**	
	42	3 430	35.40	47 200	2.3	318	**2KJ3513 - ■ JU23 - ■ ■ Q1**	
	46	3 140	32.33	46 500	2.5	318	**2KJ3513 - ■ JU23 - ■ ■ P1**	

Article No. supplement		
Shaft design	**1, 5, 6, 7 or 9**	➞ page 10/44
Frequency and voltage	**2 or 9**	➞ page 11/2
Gearbox mounting type	**A, D, F or H**	➞ page 10/37

© Siemens AG 2017

Selection and ordering data (continued)

P_{rated}	n_2	T_2	i	F_{R2}	f_B	m	Article No.	Order code
kW	rpm	Nm	-	N	-	kg	(Article No. supplement ➞ below)	No. of poles
15	**K.149-LE160ZLL4P**							
	51	2 780	28.66	45 500	2.7	318	**2KJ3513 - ■ JU23 - ■ ■ N1**	
	58	2 450	25.30	44 500	3.0	318	**2KJ3513 - ■ JU23 - ■ ■ M1**	
	104	1 370	14.15	39 100	3.0	318	**2KJ3513 - ■ JU23 - ■ ■ G1**	
	119	1 200	12.44	38 000	3.3	318	**2KJ3513 - ■ JU23 - ■ ■ F1**	
	131	1 090	11.26	37 100	3.6	318	**2KJ3513 - ■ JU23 - ■ ■ E1**	
	150	950	9.81	35 800	4.0	318	**2KJ3513 - ■ JU23 - ■ ■ D1**	
	K.129-LE160ZLL4P							
	27	5 340	55.05	30 800	0.82	235	**2KJ3512 - ■ JU23 - ■ ■ T1**	
	31	4 680	48.24	31 200	0.94	235	**2KJ3512 - ■ JU23 - ■ ■ S1**	
	35	4 080	42.04	31 300	1.1	235	**2KJ3512 - ■ JU23 - ■ ■ R1**	
	38	3 720	38.37	31 300	1.2	235	**2KJ3512 - ■ JU23 - ■ ■ Q1**	
	45	3 200	33.03	31 200	1.4	235	**2KJ3512 - ■ JU23 - ■ ■ P1**	
	47	3 060	31.55	31 100	1.4	235	**2KJ3512 - ■ JU23 - ■ ■ N1**	
	53	2 670	27.58	30 800	1.6	235	**2KJ3512 - ■ JU23 - ■ ■ M1**	
	60	2 390	24.61	30 400	1.8	235	**2KJ3512 - ■ JU23 - ■ ■ L1**	
	68	2 100	21.68	29 900	2.0	235	**2KJ3512 - ■ JU23 - ■ ■ K1**	
	78	1 840	19.00	29 400	2.2	235	**2KJ3512 - ■ JU23 - ■ ■ J1**	
	89	1 600	16.56	28 800	2.5	235	**2KJ3512 - ■ JU23 - ■ ■ H1**	
	98	1 460	15.11	28 300	2.7	235	**2KJ3512 - ■ JU23 - ■ ■ G1**	
	113	1 260	13.01	27 500	3.0	235	**2KJ3512 - ■ JU23 - ■ ■ F1**	
	125	1 140	11.80	27 000	2.5	235	**2KJ3512 - ■ JU23 - ■ ■ E1**	
	143	1 000	10.34	26 300	2.8	235	**2KJ3512 - ■ JU23 - ■ ■ D1**	
	164	875	9.01	25 500	3.2	235	**2KJ3512 - ■ JU23 - ■ ■ C1**	
	179	795	8.22	25 000	3.4	235	**2KJ3512 - ■ JU23 - ■ ■ B1**	
	208	685	7.08	24 200	3.7	235	**2KJ3512 - ■ JU23 - ■ ■ A1**	
	K.109-LE160ZLL4P							
	43	3 310	34.15	20 300	0.82	187	**2KJ3511 - ■ JU23 - ■ ■ P1**	
	50	2 830	29.23	20 600	0.92	187	**2KJ3511 - ■ JU23 - ■ ■ N1**	
	59	2 420	24.98	20 700	0.98	187	**2KJ3511 - ■ JU23 - ■ ■ M1**	
	66	2 160	22.31	20 700	1.1	187	**2KJ3511 - ■ JU23 - ■ ■ L1**	
	75	1 910	19.71	20 600	1.2	187	**2KJ3511 - ■ JU23 - ■ ■ K1**	
	85	1 680	17.30	20 400	1.4	187	**2KJ3511 - ■ JU23 - ■ ■ J1**	
	98	1 460	15.06	20 100	1.6	187	**2KJ3511 - ■ JU23 - ■ ■ H1**	
	115	1 250	12.87	19 700	1.8	187	**2KJ3511 - ■ JU23 - ■ ■ G1**	
	134	1 070	11.02	19 300	2.0	187	**2KJ3511 - ■ JU23 - ■ ■ F1**	
	141	1 010	10.45	18 600	1.2	187	**2KJ3511 - ■ JU23 - ■ ■ E1**	
	161	890	9.17	18 300	1.4	187	**2KJ3511 - ■ JU23 - ■ ■ D1**	
	185	775	7.99	17 800	1.6	187	**2KJ3511 - ■ JU23 - ■ ■ C1**	
	216	660	6.83	17 400	2.0	187	**2KJ3511 - ■ JU23 - ■ ■ B1**	
	253	565	5.84	16 900	2.3	187	**2KJ3511 - ■ JU23 - ■ ■ A1**	
	K.89-LE160ZLL4P							
	76	1 890	19.46	16 300	0.83	150	**2KJ3510 - ■ JU23 - ■ ■ K1**	
	88	1 620	16.71	16 400	0.91	150	**2KJ3510 - ■ JU23 - ■ ■ J1**	
	100	1 430	14.77	16 400	0.99	150	**2KJ3510 - ■ JU23 - ■ ■ H1**	
	117	1 220	12.56	16 300	1.1	150	**2KJ3510 - ■ JU23 - ■ ■ G1**	
	137	1 040	10.76	16 100	1.2	150	**2KJ3510 - ■ JU23 - ■ ■ F1**	
	140	1 020	10.51	15 000	0.83	150	**2KJ3510 - ■ JU23 - ■ ■ E1**	

Article No. supplement		
Shaft design	**1, 5, 6, 7 or 9**	➞ page 10/44
Frequency and voltage	**2 or 9**	➞ page 11/2
Gearbox mounting type	**A, D, F or H**	➞ page 10/37

© Siemens AG 2017

Selection and ordering data (continued)

P_{rated}	n_2	T_2	i	F_{R2}	f_B	m	Article No.	Order code
kW	rpm	Nm	-	N	-	kg	(Article No. supplement ➞ below)	No. of poles
15	**K.89-LE160ZLL4P**							
	164	875	9.02	14 900	0.91	150	**2KJ3510 - ■ JU23 - ■ ■ D1**	
	185	770	7.97	14 700	0.99	150	**2KJ3510 - ■ JU23 - ■ ■ C1**	
	218	655	6.78	14 500	1.1	150	**2KJ3510 - ■ JU23 - ■ ■ B1**	
	254	560	5.81	14 200	1.2	150	**2KJ3510 - ■ JU23 - ■ ■ A1**	
18.5	**K.189-LES180MQ4P**							
	11	15 600	130.05	104 000	1.2	794	**2KJ3515 - ■ KL33 - ■ ■ S1**	
	13	14 000	117.00	104 000	1.4	794	**2KJ3515 - ■ KL33 - ■ ■ R1**	
	14	12 500	104.56	104 000	1.6	794	**2KJ3515 - ■ KL33 - ■ ■ Q1**	
	16	11 300	94.55	104 000	1.7	794	**2KJ3515 - ■ KL33 - ■ ■ P1**	
	18	10 000	83.44	104 000	1.9	794	**2KJ3515 - ■ KL33 - ■ ■ N1**	
	20	8 930	74.35	104 000	2.2	794	**2KJ3515 - ■ KL33 - ■ ■ M1**	
	22	8 090	67.36	104 000	2.4	794	**2KJ3515 - ■ KL33 - ■ ■ L1**	
	K.169-LES180MQ4P							
	12	14 400	119.83	70 000	0.9	565	**2KJ3514 - ■ KL33 - ■ ■ X1**	
	14	12 800	106.72	70 000	1.0	565	**2KJ3514 - ■ KL33 - ■ ■ W1**	
	15	11 500	95.83	70 000	1.1	565	**2KJ3514 - ■ KL33 - ■ ■ V1**	
	17	10 200	85.51	70 000	1.3	565	**2KJ3514 - ■ KL33 - ■ ■ U1**	
	19	9 160	76.23	70 000	1.4	565	**2KJ3514 - ■ KL33 - ■ ■ T1**	
	22	8 120	67.61	70 000	1.6	565	**2KJ3514 - ■ KL33 - ■ ■ S1**	
	24	7 460	62.07	70 000	1.7	565	**2KJ3514 - ■ KL33 - ■ ■ R1**	
	27	6 570	54.68	70 000	2.0	565	**2KJ3514 - ■ KL33 - ■ ■ Q1**	
	33	5 390	44.86	70 000	2.4	565	**2KJ3514 - ■ KL33 - ■ ■ P1**	
	K.149-LES180MQ4P							
	18	9 560	79.59	45 800	0.84	394	**2KJ3513 - ■ KL33 - ■ ■ W1**	
	21	8 480	70.56	46 300	0.94	394	**2KJ3513 - ■ KL33 - ■ ■ V1**	
	24	7 480	62.28	46 500	1.1	394	**2KJ3513 - ■ KL33 - ■ ■ U1**	
	27	6 580	54.76	46 400	1.2	394	**2KJ3513 - ■ KL33 - ■ ■ T1**	
	30	5 960	49.60	46 300	1.3	394	**2KJ3513 - ■ KL33 - ■ ■ S1**	
	34	5 190	43.18	45 900	1.5	394	**2KJ3513 - ■ KL33 - ■ ■ R1**	
	42	4 250	35.40	45 000	1.8	394	**2KJ3513 - ■ KL33 - ■ ■ Q1**	
	45	3 880	32.33	44 500	2	394	**2KJ3513 - ■ KL33 - ■ ■ P1**	
	51	3 440	28.66	43 800	2.2	394	**2KJ3513 - ■ KL33 - ■ ■ N1**	
	58	3 040	25.30	42 900	2.4	394	**2KJ3513 - ■ KL33 - ■ ■ M1**	
	66	2 670	22.25	42 000	2.7	394	**2KJ3513 - ■ KL33 - ■ ■ L1**	
	73	2 420	20.15	41 200	2.9	394	**2KJ3513 - ■ KL33 - ■ ■ K1**	
	84	2 100	17.54	40 200	3.3	394	**2KJ3513 - ■ KL33 - ■ ■ J1**	
	104	1 700	14.15	38 200	2.4	394	**2KJ3513 - ■ KL33 - ■ ■ G1**	
	118	1 490	12.44	37 200	2.7	394	**2KJ3513 - ■ KL33 - ■ ■ F1**	
	131	1 350	11.26	36 300	2.9	394	**2KJ3513 - ■ KL33 - ■ ■ E1**	
	150	1 170	9.81	35 200	3.3	394	**2KJ3513 - ■ KL33 - ■ ■ D1**	
	183	965	8.04	33 600	3.8	394	**2KJ3513 - ■ KL33 - ■ ■ C1**	
	216	820	6.82	32 300	4.4	394	**2KJ3513 - ■ KL33 - ■ ■ B1**	
	K.129-LES180MQ4P							
	35	5 050	42.04	28 100	0.87	312	**2KJ3512 - ■ KL33 - ■ ■ R1**	
	38	4 610	38.37	28 300	0.95	312	**2KJ3512 - ■ KL33 - ■ ■ Q1**	
	45	3 970	33.03	28 600	1.1	312	**2KJ3512 - ■ KL33 - ■ ■ P1**	
	47	3 790	31.55	28 600	1.2	312	**2KJ3512 - ■ KL33 - ■ ■ N1**	

Article No. supplement		
Shaft design	**1, 5, 6, 7 or 9**	➞ page 10/44
Frequency and voltage	**2 or 9**	➞ page 11/2
Gearbox mounting type	**A, D, F or H**	➞ page 10/37

© Siemens AG 2017

Selection and ordering data (continued)

P_{rated}	n_2	T_2	i	F_{R2}	f_B	m	Article No.	Order code
kW	rpm	Nm	-	N	-	kg	(Article No. supplement ➞ below)	No. of poles
18.5	**K.129-LES180MQ4P**							
	53	3 310	27.58	28 600	1.3	312	**2KJ3512 - ■ KL33 - ■ ■ M1**	
	60	2 950	24.61	28 500	1.5	312	**2KJ3512 - ■ KL33 - ■ ■ L1**	
	68	2 600	21.68	28 300	1.6	312	**2KJ3512 - ■ KL33 - ■ ■ K1**	
	77	2 280	19.00	27 900	1.8	312	**2KJ3512 - ■ KL33 - ■ ■ J1**	
	89	1 990	16.56	27 500	2.0	312	**2KJ3512 - ■ KL33 - ■ ■ H1**	
	97	1 810	15.11	27 100	2.2	312	**2KJ3512 - ■ KL33 - ■ ■ G1**	
	113	1 560	13.01	26 500	2.4	312	**2KJ3512 - ■ KL33 - ■ ■ F1**	
	125	1 410	11.80	26 100	2.0	312	**2KJ3512 - ■ KL33 - ■ ■ E1**	
	142	1 240	10.34	25 500	2.3	312	**2KJ3512 - ■ KL33 - ■ ■ D1**	
	163	1 080	9.01	24 800	2.5	312	**2KJ3512 - ■ KL33 - ■ ■ C1**	
	179	985	8.22	24 400	2.7	312	**2KJ3512 - ■ KL33 - ■ ■ B1**	
	208	850	7.08	23 600	3.0	312	**2KJ3512 - ■ KL33 - ■ ■ A1**	
	K.109-LES180MQ4P							
	66	2 680	22.31	18 800	0.89	263	**2KJ3511 - ■ KL33 - ■ ■ L1**	
	75	2 360	19.71	18 900	1.0	263	**2KJ3511 - ■ KL33 - ■ ■ K1**	
	85	2 070	17.30	18 900	1.2	263	**2KJ3511 - ■ KL33 - ■ ■ J1**	
	98	1 810	15.06	18 800	1.3	263	**2KJ3511 - ■ KL33 - ■ ■ H1**	
	114	1 540	12.87	18 700	1.4	263	**2KJ3511 - ■ KL33 - ■ ■ G1**	
	133	1 320	11.02	18 400	1.6	263	**2KJ3511 - ■ KL33 - ■ ■ F1**	
	141	1 250	10.45	17 600	1.0	263	**2KJ3511 - ■ KL33 - ■ ■ E1**	
	160	1 100	9.17	17 400	1.2	263	**2KJ3511 - ■ KL33 - ■ ■ D1**	
	184	960	7.99	17 100	1.3	263	**2KJ3511 - ■ KL33 - ■ ■ C1**	
	215	820	6.83	16 700	1.6	263	**2KJ3511 - ■ KL33 - ■ ■ B1**	
	252	700	5.84	16 300	1.9	263	**2KJ3511 - ■ KL33 - ■ ■ A1**	
22	**K.189-LES180ZLN4P**							
	11	18 500	130.05	104 000	1.0	799	**2KJ3515 - ■ KN33 - ■ ■ S1**	
	13	16 700	117.00	104 000	1.2	799	**2KJ3515 - ■ KN33 - ■ ■ R1**	
	14	14 900	104.56	104 000	1.3	799	**2KJ3515 - ■ KN33 - ■ ■ Q1**	
	16	13 500	94.55	104 000	1.4	799	**2KJ3515 - ■ KN33 - ■ ■ P1**	
	18	11 900	83.44	104 000	1.6	799	**2KJ3515 - ■ KN33 - ■ ■ N1**	
	20	10 600	74.35	104 000	1.8	799	**2KJ3515 - ■ KN33 - ■ ■ M1**	
	22	9 620	67.36	104 000	2.0	799	**2KJ3515 - ■ KN33 - ■ ■ L1**	
	24	8 650	60.58	104 000	2.3	799	**2KJ3515 - ■ KN33 - ■ ■ K1**	
	K.169-LES180ZLN4P							
	14	15 200	106.72	70 000	0.85	570	**2KJ3514 - ■ KN33 - ■ ■ W1**	
	15	13 600	95.83	70 000	0.95	570	**2KJ3514 - ■ KN33 - ■ ■ V1**	
	17	12 200	85.51	70 000	1.1	570	**2KJ3514 - ■ KN33 - ■ ■ U1**	
	19	10 800	76.23	70 000	1.2	570	**2KJ3514 - ■ KN33 - ■ ■ T1**	
	22	9 660	67.61	70 000	1.3	570	**2KJ3514 - ■ KN33 - ■ ■ S1**	
	24	8 870	62.07	70 000	1.5	570	**2KJ3514 - ■ KN33 - ■ ■ R1**	
	27	7 810	54.68	70 000	1.7	570	**2KJ3514 - ■ KN33 - ■ ■ Q1**	
	33	6 410	44.86	70 000	2.0	570	**2KJ3514 - ■ KN33 - ■ ■ P1**	
	37	5 620	39.33	69 200	2.3	570	**2KJ3514 - ■ KN33 - ■ ■ N1**	
	K.149-LES180ZLN4P							
	24	8 900	62.28	42 500	0.90	399	**2KJ3513 - ■ KN33 - ■ ■ U1**	
	27	7 820	54.76	43 000	1.0	399	**2KJ3513 - ■ KN33 - ■ ■ T1**	
	30	7 080	49.60	43 100	1.1	399	**2KJ3513 - ■ KN33 - ■ ■ S1**	
	34	6 170	43.18	43 100	1.3	399	**2KJ3513 - ■ KN33 - ■ ■ R1**	

Article No. supplement		
Shaft design	**1, 5, 6, 7 or 9**	➞ page 10/44
Frequency and voltage	**2 or 9**	➞ page 11/2
Gearbox mounting type	**A, D, F or H**	➞ page 10/37

© Siemens AG 2017

5

Selection and ordering data (continued)

P_{rated} kW	n_2 rpm	T_2 Nm	i -	F_{R2} N	f_B -	m kg	Article No. (Article No. supplement ➞ below)	Order code No. of poles
22	**K.149-LES180ZLN4P**							
	42	5 060	35.40	42 700	1.6	399	**2KJ3513 - ■ KN33 - ■ ■ Q1**	
	45	4 620	32.33	42 400	1.7	399	**2KJ3513 - ■ KN33 - ■ ■ P1**	
	51	4 090	28.66	41 900	1.9	399	**2KJ3513 - ■ KN33 - ■ ■ N1**	
	58	3 610	25.30	41 300	2.1	399	**2KJ3513 - ■ KN33 - ■ ■ M1**	
	66	3 180	22.25	40 600	2.3	399	**2KJ3513 - ■ KN33 - ■ ■ L1**	
	73	2 880	20.15	40 000	2.5	399	**2KJ3513 - ■ KN33 - ■ ■ K1**	
	84	2 500	17.54	39 100	2.7	399	**2KJ3513 - ■ KN33 - ■ ■ J1**	
	102	2 050	14.38	37 700	3.2	399	**2KJ3513 - ■ KN33 - ■ ■ H1**	
	104	2 020	14.15	37 200	2.0	399	**2KJ3513 - ■ KN33 - ■ ■ G1**	
	118	1 770	12.44	36 300	2.3	399	**2KJ3513 - ■ KN33 - ■ ■ F1**	
	131	1 600	11.26	35 600	2.5	399	**2KJ3513 - ■ KN33 - ■ ■ E1**	
	150	1 400	9.81	34 600	2.7	399	**2KJ3513 - ■ KN33 - ■ ■ D1**	
	183	1 140	8.04	33 100	3.2	399	**2KJ3513 - ■ KN33 - ■ ■ C1**	
	216	975	6.82	31 800	3.7	399	**2KJ3513 - ■ KN33 - ■ ■ B1**	
	K.129-LES180ZLN4P							
	38	5 480	38.37	25 400	0.80	317	**2KJ3512 - ■ KN33 - ■ ■ Q1**	
	45	4 720	33.03	26 000	0.93	317	**2KJ3512 - ■ KN33 - ■ ■ P1**	
	47	4 500	31.55	26 200	0.98	317	**2KJ3512 - ■ KN33 - ■ ■ N1**	
	53	3 940	27.58	26 500	1.1	317	**2KJ3512 - ■ KN33 - ■ ■ M1**	
	60	3 510	24.61	26 600	1.3	317	**2KJ3512 - ■ KN33 - ■ ■ L1**	
	68	3 090	21.68	26 600	1.4	317	**2KJ3512 - ■ KN33 - ■ ■ K1**	
	77	2 710	19.00	26 400	1.5	317	**2KJ3512 - ■ KN33 - ■ ■ J1**	
	89	2 360	16.56	26 200	1.7	317	**2KJ3512 - ■ KN33 - ■ ■ H1**	
	97	2 160	15.11	25 900	1.8	317	**2KJ3512 - ■ KN33 - ■ ■ G1**	
	113	1 850	13.01	25 500	2.0	317	**2KJ3512 - ■ KN33 - ■ ■ F1**	
	125	1 680	11.80	25 200	1.7	317	**2KJ3512 - ■ KN33 - ■ ■ E1**	
	142	1 470	10.34	24 700	1.9	317	**2KJ3512 - ■ KN33 - ■ ■ D1**	
	163	1 280	9.01	24 100	2.1	317	**2KJ3512 - ■ KN33 - ■ ■ C1**	
	179	1 170	8.22	23 800	2.3	317	**2KJ3512 - ■ KN33 - ■ ■ B1**	
	208	1 010	7.08	23 100	2.5	317	**2KJ3512 - ■ KN33 - ■ ■ A1**	
	K.109-LES180ZLN4P							
	75	2 810	19.71	17 200	0.84	268	**2KJ3511 - ■ KN33 - ■ ■ K1**	
	85	2 470	17.30	17 400	0.97	268	**2KJ3511 - ■ KN33 - ■ ■ J1**	
	98	2 150	15.06	17 500	1.1	268	**2KJ3511 - ■ KN33 - ■ ■ H1**	
	114	1 830	12.87	17 600	1.2	268	**2KJ3511 - ■ KN33 - ■ ■ G1**	
	133	1 570	11.02	17 400	1.3	268	**2KJ3511 - ■ KN33 - ■ ■ F1**	
	141	1 490	10.45	16 600	0.84	268	**2KJ3511 - ■ KN33 - ■ ■ E1**	
	160	1 310	9.17	16 500	0.97	268	**2KJ3511 - ■ KN33 - ■ ■ D1**	
	184	1 140	7.99	16 300	1.1	268	**2KJ3511 - ■ KN33 - ■ ■ C1**	
	215	975	6.83	16 000	1.3	268	**2KJ3511 - ■ KN33 - ■ ■ B1**	
	252	835	5.84	15 700	1.6	268	**2KJ3511 - ■ KN33 - ■ ■ A1**	
30	**K.189-LES200ZLU4P**							
	13	22 800	117.00	104 000	0.86	875	**2KJ3515 - ■ LN33 - ■ ■ R1**	
	14	20 300	104.56	104 000	0.96	875	**2KJ3515 - ■ LN33 - ■ ■ Q1**	
	16	18 400	94.55	104 000	1.1	875	**2KJ3515 - ■ LN33 - ■ ■ P1**	
	18	16 200	83.44	104 000	1.2	875	**2KJ3515 - ■ LN33 - ■ ■ N1**	
	20	14 400	74.35	104 000	1.3	875	**2KJ3515 - ■ LN33 - ■ ■ M1**	

Article No. supplement		
Shaft design	**1, 5, 6, 7 or 9**	➞ page 10/44
Frequency and voltage	**2 or 9**	➞ page 11/2
Gearbox mounting type	**A, D, F or H**	➞ page 10/37

© Siemens AG 2017

Selection and ordering data (continued)

P_{rated}	n_2	T_2	i	F_{R2}	f_B	m	Article No.	Order code
kW	rpm	Nm	-	N	-	kg	(Article No. supplement ➞ below)	No. of poles
30	**K.189-LES200ZLU4P**							
	22	13 100	67.36	104 000	1.5	875	**2KJ3515 - ■ LN33 - ■ ■ L1**	
	24	11 800	60.58	104 000	1.7	875	**2KJ3515 - ■ LN33 - ■ ■ K1**	
	29	9 810	50.34	104 000	2.0	875	**2KJ3515 - ■ LN33 - ■ ■ J1**	
	33	8 720	44.76	104 000	2.2	875	**2KJ3515 - ■ LN33 - ■ ■ H1**	
	K.169-LES200ZLU4P							
	19	14 800	76.23	65 900	0.88	645	**2KJ3514 - ■ LN33 - ■ ■ T1**	
	22	13 100	67.61	66 300	0.99	645	**2KJ3514 - ■ LN33 - ■ ■ S1**	
	24	12 000	62.07	66 400	1.1	645	**2KJ3514 - ■ LN33 - ■ ■ R1**	
	27	10 600	54.68	66 200	1.2	645	**2KJ3514 - ■ LN33 - ■ ■ Q1**	
	33	8 740	44.86	65 300	1.5	645	**2KJ3514 - ■ LN33 - ■ ■ P1**	
	37	7 660	39.33	64 500	1.7	645	**2KJ3514 - ■ LN33 - ■ ■ N1**	
	48	5 990	30.75	62 500	2.2	645	**2KJ3514 - ■ LN33 - ■ ■ M1**	
	50	5 730	29.43	62 100	2.3	645	**2KJ3514 - ■ LN33 - ■ ■ L1**	
	54	5 260	27.02	61 300	2.5	645	**2KJ3514 - ■ LN33 - ■ ■ K1**	
	62	4 630	23.80	60 000	2.8	645	**2KJ3514 - ■ LN33 - ■ ■ J1**	
	120	2 370	12.20	51 100	2.8	645	**2KJ3514 - ■ LN33 - ■ ■ E1**	
	147	1 950	10.01	49 000	3.3	645	**2KJ3514 - ■ LN33 - ■ ■ D1**	
	167	1 710	8.78	47 600	3.7	645	**2KJ3514 - ■ LN33 - ■ ■ C1**	
	K.149-LES200ZLU4P							
	30	9 660	49.60	35 900	0.83	474	**2KJ3513 - ■ LN33 - ■ ■ S1**	
	34	8 410	43.18	36 900	0.95	474	**2KJ3513 - ■ LN33 - ■ ■ R1**	
	42	6 890	35.40	37 600	1.1	474	**2KJ3513 - ■ LN33 - ■ ■ Q1**	
	45	6 300	32.33	37 700	1.2	474	**2KJ3513 - ■ LN33 - ■ ■ P1**	
	51	5 580	28.66	37 800	1.4	474	**2KJ3513 - ■ LN33 - ■ ■ N1**	
	58	4 930	25.30	37 600	1.5	474	**2KJ3513 - ■ LN33 - ■ ■ M1**	
	66	4 330	22.25	37 400	1.7	474	**2KJ3513 - ■ LN33 - ■ ■ L1**	
	73	3 920	20.15	37 100	1.8	474	**2KJ3513 - ■ LN33 - ■ ■ K1**	
	84	3 410	17.54	36 500	2.0	474	**2KJ3513 - ■ LN33 - ■ ■ J1**	
	102	2 800	14.38	35 600	2.4	474	**2KJ3513 - ■ LN33 - ■ ■ H1**	
	104	2 750	14.15	35 100	1.5	474	**2KJ3513 - ■ LN33 - ■ ■ G1**	
	118	2 420	12.44	34 400	1.7	474	**2KJ3513 - ■ LN33 - ■ ■ F1**	
	131	2 190	11.26	33 900	1.8	474	**2KJ3513 - ■ LN33 - ■ ■ E1**	
	150	1 910	9.81	33 100	2.0	474	**2KJ3513 - ■ LN33 - ■ ■ D1**	
	183	1 560	8.04	31 800	2.4	474	**2KJ3513 - ■ LN33 - ■ ■ C1**	
	216	1 320	6.82	30 800	2.7	474	**2KJ3513 - ■ LN33 - ■ ■ B1**	
	K.129-LES200ZLU4P							
	53	5 370	27.58	21 600	0.82	393	**2KJ3512 - ■ LN33 - ■ ■ M1**	
	60	4 790	24.61	22 200	0.92	393	**2KJ3512 - ■ LN33 - ■ ■ L1**	
	68	4 220	21.68	22 700	1.0	393	**2KJ3512 - ■ LN33 - ■ ■ K1**	
	77	3 700	19.00	23 100	1.1	393	**2KJ3512 - ■ LN33 - ■ ■ J1**	
	89	3 220	16.56	23 300	1.2	393	**2KJ3512 - ■ LN33 - ■ ■ H1**	
	97	2 940	15.11	23 300	1.3	393	**2KJ3512 - ■ LN33 - ■ ■ G1**	
	113	2 530	13.01	23 200	1.5	393	**2KJ3512 - ■ LN33 - ■ ■ F1**	
	125	2 300	11.80	23 100	1.2	393	**2KJ3512 - ■ LN33 - ■ ■ E1**	
	142	2 010	10.34	22 800	1.4	393	**2KJ3512 - ■ LN33 - ■ ■ D1**	
	163	1 750	9.01	22 500	1.6	393	**2KJ3512 - ■ LN33 - ■ ■ C1**	
	179	1 600	8.22	22 300	1.7	393	**2KJ3512 - ■ LN33 - ■ ■ B1**	
	208	1 380	7.08	21 800	1.8	393	**2KJ3512 - ■ LN33 - ■ ■ A1**	

Article No. supplement		
Shaft design	**1, 5, 6, 7 or 9**	➞ page 10/44
Frequency and voltage	**2 or 9**	➞ page 11/2
Gearbox mounting type	**A, D, F or H**	➞ page 10/37

© Siemens AG 2017

5

Selection and ordering data (continued)

P_{rated} kW	n_2 rpm	T_2 Nm	i -	F_{R2} N	f_B -	m kg	Article No. (Article No. supplement ➞ below)	Order code No. of poles
37	**K.189-LES225SD4P**							
	16	22 600	94.55	104 000	0.86	917	**2KJ3515 - ■ MF33 - ■ ■ P1**	
	18	19 900	83.44	104 000	0.98	917	**2KJ3515 - ■ MF33 - ■ ■ N1**	
	20	17 700	74.35	104 000	1.1	917	**2KJ3515 - ■ MF33 - ■ ■ M1**	
	22	16 100	67.36	104 000	1.2	917	**2KJ3515 - ■ MF33 - ■ ■ L1**	
	24	14 400	60.58	104 000	1.3	917	**2KJ3515 - ■ MF33 - ■ ■ K1**	
	29	12 000	50.34	104 000	1.6	917	**2KJ3515 - ■ MF33 - ■ ■ J1**	
	33	10 700	44.76	104 000	1.8	917	**2KJ3515 - ■ MF33 - ■ ■ H1**	
	41	8 520	35.67	104 000	2.3	917	**2KJ3515 - ■ MF33 - ■ ■ G1**	
	52	6 780	28.39	104 000	2.9	917	**2KJ3515 - ■ MF33 - ■ ■ F1**	
	K.169-LES225SD4P							
	22	16 100	67.61	59 200	0.80	690	**2KJ3514 - ■ MF33 - ■ ■ S1**	
	24	14 800	62.07	59 800	0.88	690	**2KJ3514 - ■ MF33 - ■ ■ R1**	
	27	13 000	54.68	60 400	0.99	690	**2KJ3514 - ■ MF33 - ■ ■ Q1**	
	33	10 700	44.86	60 600	1.2	690	**2KJ3514 - ■ MF33 - ■ ■ P1**	
	38	9 400	39.33	60 300	1.4	690	**2KJ3514 - ■ MF33 - ■ ■ N1**	
	48	7 350	30.75	59 200	1.8	690	**2KJ3514 - ■ MF33 - ■ ■ M1**	
	50	7 030	29.43	58 900	1.8	690	**2KJ3514 - ■ MF33 - ■ ■ L1**	
	55	6 460	27.02	58 400	2.0	690	**2KJ3514 - ■ MF33 - ■ ■ K1**	
	62	5 690	23.80	57 400	2.3	690	**2KJ3514 - ■ MF33 - ■ ■ J1**	
	76	4 660	19.53	55 700	2.7	690	**2KJ3514 - ■ MF33 - ■ ■ H1**	
	86	4 090	17.12	54 500	3.0	690	**2KJ3514 - ■ MF33 - ■ ■ G1**	
	121	2 910	12.20	49 500	2.3	690	**2KJ3514 - ■ MF33 - ■ ■ E1**	
	148	2 390	10.01	47 600	2.7	690	**2KJ3514 - ■ MF33 - ■ ■ D1**	
	168	2 090	8.78	46 400	3.0	690	**2KJ3514 - ■ MF33 - ■ ■ C1**	
	215	1 640	6.86	43 900	3.7	690	**2KJ3514 - ■ MF33 - ■ ■ B1**	
	K.149-LES225SD4P							
	42	8 460	35.40	33 100	0.93	518	**2KJ3513 - ■ MF33 - ■ ■ Q1**	
	46	7 720	32.33	33 700	1.0	518	**2KJ3513 - ■ MF33 - ■ ■ P1**	
	52	6 850	28.66	34 100	1.1	518	**2KJ3513 - ■ MF33 - ■ ■ N1**	
	58	6 040	25.30	34 400	1.2	518	**2KJ3513 - ■ MF33 - ■ ■ M1**	
	66	5 310	22.25	34 500	1.4	518	**2KJ3513 - ■ MF33 - ■ ■ L1**	
	73	4 810	20.15	34 500	1.5	518	**2KJ3513 - ■ MF33 - ■ ■ K1**	
	84	4 190	17.54	34 300	1.6	518	**2KJ3513 - ■ MF33 - ■ ■ J1**	
	103	3 430	14.38	33 700	1.9	518	**2KJ3513 - ■ MF33 - ■ ■ H1**	
	104	3 380	14.15	33 200	1.2	518	**2KJ3513 - ■ MF33 - ■ ■ G1**	
	119	2 970	12.44	32 700	1.4	518	**2KJ3513 - ■ MF33 - ■ ■ F1**	
	131	2 690	11.26	32 300	1.5	518	**2KJ3513 - ■ MF33 - ■ ■ E1**	
	151	2 340	9.81	31 700	1.6	518	**2KJ3513 - ■ MF33 - ■ ■ D1**	
	184	1 920	8.04	30 700	1.9	518	**2KJ3513 - ■ MF33 - ■ ■ C1**	
	217	1 630	6.82	29 800	2.2	518	**2KJ3513 - ■ MF33 - ■ ■ B1**	
	K.129-LES225SD4P							
	68	5 180	21.68	19 400	0.82	435	**2KJ3512 - ■ MF33 - ■ ■ K1**	
	78	4 540	19.00	20 100	0.91	435	**2KJ3512 - ■ MF33 - ■ ■ J1**	
	89	3 950	16.56	20 700	1.0	435	**2KJ3512 - ■ MF33 - ■ ■ H1**	
	98	3 610	15.11	20 900	1.1	435	**2KJ3512 - ■ MF33 - ■ ■ G1**	
	114	3 110	13.01	21 200	1.2	435	**2KJ3512 - ■ MF33 - ■ ■ F1**	
	125	2 820	11.80	21 200	1.0	435	**2KJ3512 - ■ MF33 - ■ ■ E1**	

Article No. supplement		
Shaft design	**1, 5, 6, 7 or 9**	➞ page 10/44
Frequency and voltage	**2 or 9**	➞ page 11/2
Gearbox mounting type	**A, D, F or H**	➞ page 10/37

© Siemens AG 2017

Selection and ordering data (continued)

P_{rated} kW	n_2 rpm	T_2 Nm	i -	F_{R2} N	f_B -	m kg	Article No. (Article No. supplement ➞ below)	Order code No. of poles
37	**K.129-LES225SD4P**							
	143	2 470	10.34	21 200	1.2	435	**2KJ3512 - ■ MF33 - ■ ■ D1**	
	164	2 150	9.01	21 100	1.3	435	**2KJ3512 - ■ MF33 - ■ ■ C1**	
	180	1 960	8.22	21 000	1.4	435	**2KJ3512 - ■ MF33 - ■ ■ B1**	
	209	1 690	7.08	20 700	1.5	435	**2KJ3512 - ■ MF33 - ■ ■ A1**	
45	**K.189-LES225YMF4P**							
	18	24 200	83.44	104 000	0.8	962	**2KJ3515 - ■ MT33 - ■ ■ N1**	
	20	21 600	74.35	104 000	0.9	962	**2KJ3515 - ■ MT33 - ■ ■ M1**	
	22	19 500	67.36	104 000	1.0	962	**2KJ3515 - ■ MT33 - ■ ■ L1**	
	24	17 600	60.58	104 000	1.1	962	**2KJ3515 - ■ MT33 - ■ ■ K1**	
	29	14 600	50.34	104 000	1.3	962	**2KJ3515 - ■ MT33 - ■ ■ J1**	
	33	13 000	44.76	104 000	1.5	962	**2KJ3515 - ■ MT33 - ■ ■ H1**	
	41	10 300	35.67	104 000	1.9	962	**2KJ3515 - ■ MT33 - ■ ■ G1**	
	52	8 250	28.39	103 900	2.4	962	**2KJ3515 - ■ MT33 - ■ ■ F1**	
	58	7 370	25.37	101 700	2.6	962	**2KJ3515 - ■ MT33 - ■ ■ E1**	
	K.169-LES225YMF4P							
	27	15 800	54.68	53 900	0.82	735	**2KJ3514 - ■ MT33 - ■ ■ Q1**	
	33	13 000	44.86	55 200	1.0	735	**2KJ3514 - ■ MT33 - ■ ■ P1**	
	38	11 400	39.33	55 600	1.1	735	**2KJ3514 - ■ MT33 - ■ ■ N1**	
	48	8 940	30.75	55 500	1.5	735	**2KJ3514 - ■ MT33 - ■ ■ M1**	
	50	8 550	29.43	55 400	1.5	735	**2KJ3514 - ■ MT33 - ■ ■ L1**	
	55	7 850	27.02	55 100	1.7	735	**2KJ3514 - ■ MT33 - ■ ■ K1**	
	62	6 920	23.80	54 600	1.9	735	**2KJ3514 - ■ MT33 - ■ ■ J1**	
	76	5 670	19.53	53 400	2.2	735	**2KJ3514 - ■ MT33 - ■ ■ H1**	
	86	4 970	17.12	52 400	2.5	735	**2KJ3514 - ■ MT33 - ■ ■ G1**	
	110	3 890	13.39	50 400	3.1	735	**2KJ3514 - ■ MT33 - ■ ■ F1**	
	121	3 540	12.20	47 700	1.9	735	**2KJ3514 - ■ MT33 - ■ ■ E1**	
	148	2 910	10.01	46 100	2.2	735	**2KJ3514 - ■ MT33 - ■ ■ D1**	
	168	2 550	8.78	45 100	2.5	735	**2KJ3514 - ■ MT33 - ■ ■ C1**	
	215	1 990	6.86	42 900	3.1	735	**2KJ3514 - ■ MT33 - ■ ■ B1**	
	K.149-LES225YMF4P							
	46	9 400	32.33	29 000	0.83	563	**2KJ3513 - ■ MT33 - ■ ■ P1**	
	52	8 330	28.66	30 000	0.92	563	**2KJ3513 - ■ MT33 - ■ ■ N1**	
	58	7 350	25.30	30 800	1.0	563	**2KJ3513 - ■ MT33 - ■ ■ M1**	
	66	6 470	22.25	31 300	1.1	563	**2KJ3513 - ■ MT33 - ■ ■ L1**	
	73	5 850	20.15	31 600	1.2	563	**2KJ3513 - ■ MT33 - ■ ■ K1**	
	84	5 100	17.54	31 700	1.4	563	**2KJ3513 - ■ MT33 - ■ ■ J1**	
	103	4 180	14.38	31 600	1.6	563	**2KJ3513 - ■ MT33 - ■ ■ H1**	
	104	4 110	14.15	31 000	1.0	563	**2KJ3513 - ■ MT33 - ■ ■ G1**	
	119	3 610	12.44	30 800	1.1	563	**2KJ3513 - ■ MT33 - ■ ■ F1**	
	131	3 270	11.26	30 600	1.2	563	**2KJ3513 - ■ MT33 - ■ ■ E1**	
	151	2 850	9.81	30 200	1.3	563	**2KJ3513 - ■ MT33 - ■ ■ D1**	
	184	2 330	8.04	29 500	1.6	563	**2KJ3513 - ■ MT33 - ■ ■ C1**	
	217	1 980	6.82	28 800	1.8	563	**2KJ3513 - ■ MT33 - ■ ■ B1**	
	K.129-LES225YMF4P							
	89	4 810	16.56	17 800	0.83	480	**2KJ3512 - ■ MT33 - ■ ■ H1**	
	98	4 390	15.11	18 300	0.90	480	**2KJ3512 - ■ MT33 - ■ ■ G1**	
	114	3 780	13.01	18 900	1.0	480	**2KJ3512 - ■ MT33 - ■ ■ F1**	
	125	3 430	11.80	19 100	0.82	480	**2KJ3512 - ■ MT33 - ■ ■ E1**	

Article No. supplement		
Shaft design	**1, 5, 6, 7 or 9**	➞ page 10/44
Frequency and voltage	**2 or 9**	➞ page 11/2
Gearbox mounting type	**A, D, F or H**	➞ page 10/37

© Siemens AG 2017

5

Selection and ordering data (continued)

P_{rated} kW	n_2 rpm	T_2 Nm	i -	F_{R2} N	f_B -	m kg	Article No. (Article No. supplement ➞ below)	Order code No. of poles
45	**K.129-LES225YMF4P**							
	143	3 000	10.34	19 400	0.95	480	**2KJ3512 - ■ MT33 - ■ ■ D1**	
	164	2 620	9.01	19 500	1.1	480	**2KJ3512 - ■ MT33 - ■ ■ C1**	
	180	2 390	8.22	19 500	1.1	480	**2KJ3512 - ■ MT33 - ■ ■ B1**	
	209	2 050	7.08	19 500	1.2	480	**2KJ3512 - ■ MT33 - ■ ■ A1**	
55	**K.189-LES250MD4P**							
	22	24 000	67.36	104 000	0.81	1 066	**2KJ3515 - ■ NM33 - ■ ■ L1**	
	24	21 600	60.58	104 000	0.90	1 066	**2KJ3515 - ■ NM33 - ■ ■ K1**	
	29	17 900	50.34	104 000	1.1	1 066	**2KJ3515 - ■ NM33 - ■ ■ J1**	
	33	15 900	44.76	104 000	1.2	1 066	**2KJ3515 - ■ NM33 - ■ ■ H1**	
	41	12 700	35.67	103 500	1.5	1 066	**2KJ3515 - ■ NM33 - ■ ■ G1**	
	52	10 100	28.39	100 300	1.9	1 066	**2KJ3515 - ■ NM33 - ■ ■ F1**	
	58	9 060	25.37	98 400	2.2	1 066	**2KJ3515 - ■ NM33 - ■ ■ E1**	
	70	7 530	21.09	95 300	2.6	1 066	**2KJ3515 - ■ NM33 - ■ ■ D1**	
	78	6 700	18.75	93 100	2.9	1 066	**2KJ3515 - ■ NM33 - ■ ■ C1**	
	K.169-LES250MD4P							
	33	16 000	44.86	48 400	0.81	837	**2KJ3514 - ■ NM33 - ■ ■ P1**	
	37	14 000	39.33	49 700	0.93	837	**2KJ3514 - ■ NM33 - ■ ■ N1**	
	48	10 900	30.75	51 100	1.2	837	**2KJ3514 - ■ NM33 - ■ ■ M1**	
	50	10 500	29.43	51 000	1.2	837	**2KJ3514 - ■ NM33 - ■ ■ L1**	
	54	9 650	27.02	51 100	1.3	837	**2KJ3514 - ■ NM33 - ■ ■ K1**	
	62	8 500	23.80	51 000	1.5	837	**2KJ3514 - ■ NM33 - ■ ■ J1**	
	75	6 970	19.53	50 500	1.8	837	**2KJ3514 - ■ NM33 - ■ ■ H1**	
	86	6 110	17.12	49 900	2.0	837	**2KJ3514 - ■ NM33 - ■ ■ G1**	
	110	4 780	13.39	48 400	2.5	837	**2KJ3514 - ■ NM33 - ■ ■ F1**	
	120	4 350	12.20	45 400	1.6	837	**2KJ3514 - ■ NM33 - ■ ■ E1**	
	147	3 570	10.01	44 300	1.8	837	**2KJ3514 - ■ NM33 - ■ ■ D1**	
	167	3 130	8.78	43 500	2.0	837	**2KJ3514 - ■ NM33 - ■ ■ C1**	
	214	2 450	6.86	41 700	2.5	837	**2KJ3514 - ■ NM33 - ■ ■ B1**	
	K.149-LES250MD4P							
	58	9 040	25.30	26 100	0.82	664	**2KJ3513 - ■ NM33 - ■ ■ M1**	
	66	7 950	22.25	27 200	0.91	664	**2KJ3513 - ■ NM33 - ■ ■ L1**	
	73	7 200	20.15	27 900	0.98	664	**2KJ3513 - ■ NM33 - ■ ■ K1**	
	84	6 260	17.54	28 600	1.1	664	**2KJ3513 - ■ NM33 - ■ ■ J1**	
	102	5 130	14.38	29 100	1.3	664	**2KJ3513 - ■ NM33 - ■ ■ H1**	
	104	5 050	14.15	28 300	0.82	664	**2KJ3513 - ■ NM33 - ■ ■ G1**	
	118	4 440	12.44	28 500	0.91	664	**2KJ3513 - ■ NM33 - ■ ■ F1**	
	131	4 020	11.26	28 500	0.98	664	**2KJ3513 - ■ NM33 - ■ ■ E1**	
	150	3 500	9.81	28 400	1.1	664	**2KJ3513 - ■ NM33 - ■ ■ D1**	
	183	2 870	8.04	28 000	1.3	664	**2KJ3513 - ■ NM33 - ■ ■ C1**	
	216	2 430	6.82	27 500	1.5	664	**2KJ3513 - ■ NM33 - ■ ■ B1**	

Article No. supplement		
Shaft design	**1, 5, 6, 7 or 9**	➞ page 10/44
Frequency and voltage	**2 or 9**	➞ page 11/2
Gearbox mounting type	**A, D, F or H**	➞ page 10/37

© Siemens AG 2017

Selection and ordering data

i	n_2	T_{2N}	F_{R2}	φ [1]	J_G	R_{ex}	Motor frame size											Article No.
-	rpm	Nm	N	‘	10^{-4} kgm²	-	63	71	80	90	100	112	132	160	180	200	225	250	
B.19																			
42.10	34	50	3 880	13.0	0.02	3410/81	✓	✓											**2KJ3500 - ■■■■■ - ■■ A2**
37.28	39	50	3 700	13.5	0.03	671/18	✓	✓	✓										**2KJ3500 - ■■■■■ - ■■ X1**
32.39	45	50	3 510	13.6	0.04	583/18	✓	✓	✓										**2KJ3500 - ■■■■■ - ■■ W1**
29.44	49	50	3 380	13.6	0.04	265/9	✓	✓	✓										**2KJ3500 - ■■■■■ - ■■ V1**
25.06	58	50	3 170	13.7	0.06	451/18	✓	✓	✓										**2KJ3500 - ■■■■■ - ■■ U1**
22.78	64	50	3 050	13.7	0.08	205/9	✓	✓	✓										**2KJ3500 - ■■■■■ - ■■ T1**
19.86	73	50	2 890	13.9	0.09	715/36	✓	✓	✓										**2KJ3500 - ■■■■■ - ■■ S1**
17.78	82	50	2 770	14.0	0.12	160/9	✓	✓	✓										**2KJ3500 - ■■■■■ - ■■ R1**
15.79	92	50	2 640	14.1	0.14	1705/108	✓	✓	✓										**2KJ3500 - ■■■■■ - ■■ Q1**
14.57	100	50	2 550	14.1	0.17	1705/117	✓	✓	✓										**2KJ3500 - ■■■■■ - ■■ P1**
12.66	115	50	2 410	14.4	0.19	1595/126	✓	✓	✓										**2KJ3500 - ■■■■■ - ■■ N1**
11.00	132	50	2 270	14.1	0.19	11/1	✓	✓	✓										**2KJ3500 - ■■■■■ - ■■ M1**
9.93	146	50	2 190	14.2	0.25	715/72	✓	✓	✓										**2KJ3500 - ■■■■■ - ■■ L1**
9.35	155	50	2 160	14.2	0.29	1430/153	✓	✓	✓										**2KJ3500 - ■■■■■ - ■■ K1**
8.15	178	47	2 110	14.6	0.33	220/27	✓	✓	✓										**2KJ3500 - ■■■■■ - ■■ J1**
7.87	184	38	2 160	21.4	0.14	1472/187	✓	✓	✓										**2KJ3500 - ■■■■■ - ■■ H1**
6.99	207	38	2 100	21.7	0.17	713/102	✓	✓	✓										**2KJ3500 - ■■■■■ - ■■ G1**
6.45	225	39	2 060	21.6	0.20	1426/221	✓	✓	✓										**2KJ3500 - ■■■■■ - ■■ F1**
5.61	258	37	1 990	22.3	0.22	667/119	✓	✓	✓										**2KJ3500 - ■■■■■ - ■■ E1**
4.87	298	35	1 930	21.6	0.24	414/85	✓	✓	✓										**2KJ3500 - ■■■■■ - ■■ D1**
4.40	330	34	1 880	22.0	0.32	299/68	✓	✓	✓										**2KJ3500 - ■■■■■ - ■■ C1**
4.14	350	33	1 850	22.0	0.37	1196/289	✓	✓	✓										**2KJ3500 - ■■■■■ - ■■ B1**
3.61	402	31	1 780	22.8	0.43	184/51	✓	✓	✓										**2KJ3500 - ■■■■■ - ■■ A1**

[1] Only in conjunction with reduced-backlash version

© Siemens AG 2017

Selection and ordering data (continued)

i	n_2	T_{2N}	F_{R2}	φ [1]	J_G	R_{ex}	Motor frame size												Article No.
-	rpm	Nm	N	'	10^{-4} kgm²	-	63	71	80	90	100	112	132	160	180	200	225	250	
B.29																			
46.85	31	110	4 130	10.6	0.04	1265/27	✓	✓											**2KJ3501 - ■■■■■ - ■■ B2**
41.56	35	110	4 130	11.0	0.05	374/9	✓	✓	✓	✓									**2KJ3501 - ■■■■■ - ■■ A2**
36.06	40	110	4 130	11.1	0.06	649/18	✓	✓	✓	✓									**2KJ3501 - ■■■■■ - ■■ X1**
32.78	44	110	4 130	11.1	0.07	295/9	✓	✓	✓	✓									**2KJ3501 - ■■■■■ - ■■ W1**
28.11	52	110	4 130	11.2	0.09	253/9	✓	✓	✓	✓									**2KJ3501 - ■■■■■ - ■■ V1**
25.56	57	110	4 130	11.2	0.11	230/9	✓	✓	✓	✓									**2KJ3501 - ■■■■■ - ■■ U1**
22.41	65	110	4 130	11.4	0.13	605/27	✓	✓	✓	✓	✓								**2KJ3501 - ■■■■■ - ■■ T1**
20.00	72	110	4 130	11.4	0.16	20/1	✓	✓	✓	✓	✓								**2KJ3501 - ■■■■■ - ■■ S1**
17.82	81	110	4 130	11.5	0.19	1925/108	✓	✓	✓	✓	✓								**2KJ3501 - ■■■■■ - ■■ R1**
16.45	88	110	4 130	11.5	0.23	1925/117	✓	✓	✓	✓	✓								**2KJ3501 - ■■■■■ - ■■ Q1**
14.40	101	110	4 020	11.7	0.28	605/42	✓	✓	✓	✓	✓								**2KJ3501 - ■■■■■ - ■■ P1**
12.63	115	110	3 800	12.0	0.27	341/27	✓	✓	✓	✓	✓								**2KJ3501 - ■■■■■ - ■■ N1**
11.46	127	110	3 650	12.1	0.38	275/24	✓	✓	✓	✓	✓								**2KJ3501 - ■■■■■ - ■■ M1**
10.78	135	110	3 560	12.1	0.44	550/51	✓	✓	✓	✓	✓								**2KJ3501 - ■■■■■ - ■■ L1**
9.51	152	110	3 370	11.8	0.50	770/81	✓	✓	✓	✓	✓								**2KJ3501 - ■■■■■ - ■■ K1**
8.25	176	110	3 160	12.0	0.67	33/4	✓	✓	✓	✓	✓								**2KJ3501 - ■■■■■ - ■■ J1**
7.84	185	75	3 350	16.5	0.41	345/44	✓	✓	✓	✓	✓								**2KJ3501 - ■■■■■ - ■■ H1**
7.38	196	75	3 260	16.5	0.48	1380/187	✓	✓	✓	✓	✓								**2KJ3501 - ■■■■■ - ■■ G1**
6.51	223	75	3 100	16.1	0.54	644/99	✓	✓	✓	✓	✓								**2KJ3501 - ■■■■■ - ■■ F1**
5.65	257	75	2 920	16.3	0.73	621/110	✓	✓	✓	✓	✓								**2KJ3501 - ■■■■■ - ■■ E1**
5.07	286	74	2 900	18.9	0.60	345/68	✓	✓	✓	✓	✓								**2KJ3501 - ■■■■■ - ■■ D1**
4.78	303	74	2 830	18.9	0.70	1380/289	✓	✓	✓	✓	✓								**2KJ3501 - ■■■■■ - ■■ C1**
4.21	344	74	2 680	18.2	0.82	644/153	✓	✓	✓	✓	✓								**2KJ3501 - ■■■■■ - ■■ B1**
3.65	397	73	2 550	18.6	1.10	621/170	✓	✓	✓	✓	✓								**2KJ3501 - ■■■■■ - ■■ A1**

[1] Only in conjunction with reduced-backlash version

© Siemens AG 2017

Selection and ordering data (continued)

i	n_2	T_{2N}	F_{R2}	φ[1]	J_G	R_{ex}	Motor frame size												Article No.
-	rpm	Nm	N	'	10^{-4} kgm²	-	63	71	80	90	100	112	132	160	180	200	225	250	
B.39																			
56.36	26	250	6 980	8.5	0.06	4565/81	✓	✓											**2KJ3502 - ■■■■■ - ■■ A2**
50.11	29	210	6 980	8.8	0.08	451/9	✓	✓	✓	✓									**2KJ3502 - ■■■■■ - ■■ X1**
44.00	33	250	6 980	8.9	0.09	44/1	✓	✓	✓	✓									**2KJ3502 - ■■■■■ - ■■ W1**
40.00	36	230	6 980	8.9	0.11	40/1	✓	✓	✓	✓									**2KJ3502 - ■■■■■ - ■■ V1**
34.22	42	250	6 980	8.9	0.13	308/9	✓	✓	✓	✓									**2KJ3502 - ■■■■■ - ■■ U1**
31.11	47	250	6 980	8.9	0.16	280/9	✓	✓	✓	✓									**2KJ3502 - ■■■■■ - ■■ T1**
27.50	53	250	6 980	9.0	0.20	55/2	✓	✓	✓	✓	✓	✓							**2KJ3502 - ■■■■■ - ■■ S1**
25.00	58	250	6 980	9.0	0.26	25/1	✓	✓	✓	✓	✓	✓							**2KJ3502 - ■■■■■ - ■■ R1**
21.90	66	250	6 720	9.2	0.30	2365/108	✓	✓	✓	✓	✓	✓							**2KJ3502 - ■■■■■ - ■■ Q1**
20.21	72	250	6 490	9.2	0.36	2365/117	✓	✓	✓	✓	✓	✓							**2KJ3502 - ■■■■■ - ■■ P1**
17.90	81	250	6 160	9.3	0.43	2255/126	✓	✓	✓	✓	✓	✓							**2KJ3502 - ■■■■■ - ■■ N1**
14.90	97	250	5 680	9.5	0.58	715/48	✓	✓	✓	✓	✓	✓							**2KJ3502 - ■■■■■ - ■■ M1**
14.02	103	250	5 520	9.5	0.67	715/51	✓	✓	✓	✓	✓	✓							**2KJ3502 - ■■■■■ - ■■ L1**
12.56	115	250	5 260	9.6	0.75	2035/162	✓	✓	✓	✓	✓	✓							**2KJ3502 - ■■■■■ - ■■ K1**
10.69	136	240	4 960	9.8	0.98	385/36	✓	✓	✓	✓	✓	✓							**2KJ3502 - ■■■■■ - ■■ J1**
9.17	158	230	4 690	10.1	1.29	55/6			✓	✓	✓	✓							**2KJ3502 - ■■■■■ - ■■ H1**
7.89	184	220	4 550	10.3	1.66	1705/216			✓	✓	✓	✓							**2KJ3502 - ■■■■■ - ■■ G1**
6.60	220	200	4 590	15.1	0.94	897/136	✓	✓	✓	✓	✓	✓							**2KJ3502 - ■■■■■ - ■■ F1**
6.21	233	200	4 550	15.1	1.08	1794/289	✓	✓	✓	✓	✓	✓							**2KJ3502 - ■■■■■ - ■■ E1**
5.56	261	200	4 460	15.5	1.26	851/153	✓	✓	✓	✓	✓	✓							**2KJ3502 - ■■■■■ - ■■ D1**
4.74	306	200	4 330	16.0	1.69	161/34	✓	✓	✓	✓	✓	✓							**2KJ3502 - ■■■■■ - ■■ C1**
4.06	357	200	4 190	16.5	2.30	69/17			✓	✓	✓	✓							**2KJ3502 - ■■■■■ - ■■ B1**
3.50	414	192	4 050	17.1	3.00	713/204			✓	✓	✓	✓							**2KJ3502 - ■■■■■ - ■■ A1**

[1] Only in conjunction with reduced-backlash version

© Siemens AG 2017

Selection and ordering data (continued)

i	n_2	T_{2N}	F_{R2}	φ[1]	J_G	R_{ex}	Motor frame size												Article No.
-	rpm	Nm	N	‘	10^{-4} kgm²	-	63	71	80	90	100	112	132	160	180	200	225	250	
B.49																			
59.28	24	450	9 510	8.3	0.19	1067/18	✓	✓	✓	✓									**2KJ3503 - ■■■■■ - ■■ C2**
53.89	27	450	9 120	8.3	0.23	485/9	✓	✓	✓	✓									**2KJ3503 - ■■■■■ - ■■ B2**
45.83	32	450	8 480	8.3	0.28	275/6	✓	✓	✓	✓									**2KJ3503 - ■■■■■ - ■■ A2**
41.67	35	450	8 120	8.3	0.34	125/3	✓	✓	✓	✓									**2KJ3503 - ■■■■■ - ■■ X1**
37.18	39	450	7 710	8.4	0.40	4015/108	✓	✓	✓	✓	✓	✓							**2KJ3503 - ■■■■■ - ■■ W1**
33.33	44	450	7 320	8.4	0.48	100/3	✓	✓	✓	✓	✓	✓							**2KJ3503 - ■■■■■ - ■■ V1**
30.05	48	450	6 970	8.4	0.56	3245/108	✓	✓	✓	✓	✓	✓							**2KJ3503 - ■■■■■ - ■■ U1**
27.74	52	450	6 710	8.4	0.67	3245/117	✓	✓	✓	✓	✓	✓							**2KJ3503 - ■■■■■ - ■■ T1**
25.32	57	450	6 420	8.5	0.80	1595/63	✓	✓	✓	✓	✓	✓	✓						**2KJ3503 - ■■■■■ - ■■ S1**
21.01	69	450	5 850	8.6	1.03	3025/144	✓	✓	✓	✓	✓	✓	✓						**2KJ3503 - ■■■■■ - ■■ R1**
19.77	73	450	5 670	8.6	1.18	3025/153	✓	✓	✓	✓	✓	✓	✓						**2KJ3503 - ■■■■■ - ■■ Q1**
18.67	78	450	5 510	8.6	1.34	3025/162	✓	✓	✓	✓	✓	✓	✓						**2KJ3503 - ■■■■■ - ■■ P1**
15.89	91	450	5 060	8.7	1.66	143/9	✓	✓	✓	✓	✓	✓	✓						**2KJ3503 - ■■■■■ - ■■ N1**
13.61	107	450	4 660	8.9	2.10	245/18			✓	✓	✓	✓	✓						**2KJ3503 - ■■■■■ - ■■ M1**
11.97	121	450	4 340	9.0	2.50	2585/216			✓	✓	✓	✓	✓						**2KJ3503 - ■■■■■ - ■■ L1**
10.10	144	450	3 930	9.2	3.30	2090/207			✓	✓	✓	✓	✓						**2KJ3503 - ■■■■■ - ■■ K1**
8.80	165	450	3 620	9.7	4.40	44/5			✓	✓	✓	✓	✓						**2KJ3503 - ■■■■■ - ■■ J1**
8.29	175	330	4 540	14.1	1.52	2255/272	✓	✓	✓	✓	✓	✓	✓						**2KJ3503 - ■■■■■ - ■■ H1**
7.80	186	330	4 410	14.1	1.74	2255/289	✓	✓	✓	✓	✓	✓	✓						**2KJ3503 - ■■■■■ - ■■ G1**
7.37	197	330	4 290	14.1	1.97	2255/306	✓	✓	✓	✓	✓	✓	✓						**2KJ3503 - ■■■■■ - ■■ F1**
6.27	231	330	3 970	14.4	2.50	533/85	✓	✓	✓	✓	✓	✓	✓						**2KJ3503 - ■■■■■ - ■■ E1**
5.37	270	330	3 700	14.8	3.30	2009/374			✓	✓	✓	✓	✓						**2KJ3503 - ■■■■■ - ■■ D1**
4.72	307	330	3 690	15.1	4.10	1927/408			✓	✓	✓	✓	✓						**2KJ3503 - ■■■■■ - ■■ C1**
3.98	364	330	3 660	15.6	5.40	1558/391			✓	✓	✓	✓	✓						**2KJ3503 - ■■■■■ - ■■ B1**
3.47	418	325	3 610	17.0	7.20	1476/425			✓	✓	✓	✓	✓						**2KJ3503 - ■■■■■ - ■■ A1**

[1] Only in conjunction with reduced-backlash version

© Siemens AG 2017

Selection and ordering data (continued)

i	n_2	T_{2N}	F_{R2}	φ[1]	J_G	R_{ex}	Motor frame size												Article No.
-	rpm	Nm	N	'	10^{-4} kgm²	-	63	71	80	90	100	112	132	160	180	200	225	250	
K.39																			
157.32	9.2	220	6 080	7.3	0.04	3933/25	✓	✓											**2KJ3504 - ■■■■■ - ■■ J2**
139.54	10	220	6 080	7.4	0.05	17442/125	✓	✓	✓	✓									**2KJ3504 - ■■■■■ - ■■ H2**
121.07	12	220	6 080	7.4	0.06	30267/250	✓	✓	✓	✓									**2KJ3504 - ■■■■■ - ■■ G2**
110.06	13	220	6 080	7.4	0.07	30267/275	✓	✓	✓	✓									**2KJ3504 - ■■■■■ - ■■ F2**
94.39	15	220	6 080	7.4	0.09	11799/125	✓	✓	✓	✓									**2KJ3504 - ■■■■■ - ■■ E2**
85.81	17	220	6 080	7.4	0.11	23598/275	✓	✓	✓	✓									**2KJ3504 - ■■■■■ - ■■ D2**
75.24	19	220	6 080	7.5	0.12	1881/25	✓	✓	✓	✓	✓	✓							**2KJ3504 - ■■■■■ - ■■ C2**
67.16	22	220	6 080	7.5	0.15	18468/275	✓	✓	✓	✓	✓	✓							**2KJ3504 - ■■■■■ - ■■ B2**
59.85	24	220	6 080	7.5	0.18	1197/20	✓	✓	✓	✓	✓	✓							**2KJ3504 - ■■■■■ - ■■ A2**
55.25	26	220	6 080	7.5	0.22	3591/65	✓	✓	✓	✓	✓	✓							**2KJ3504 - ■■■■■ - ■■ X1**
48.37	30	220	6 080	7.6	0.26	16929/350	✓	✓	✓	✓	✓	✓							**2KJ3504 - ■■■■■ - ■■ W1**
42.41	34	220	5 790	7.7	0.24	5301/125	✓	✓	✓	✓	✓	✓							**2KJ3504 - ■■■■■ - ■■ V1**
38.47	38	220	5 540	7.7	0.34	1539/40	✓	✓	✓	✓	✓	✓							**2KJ3504 - ■■■■■ - ■■ U1**
36.21	40	220	5 390	7.7	0.40	3078/85	✓	✓	✓	✓	✓	✓							**2KJ3504 - ■■■■■ - ■■ T1**
31.92	45	220	5 080	7.6	0.44	798/25	✓	✓	✓	✓	✓	✓							**2KJ3504 - ■■■■■ - ■■ S1**
27.70	52	220	4 760	7.7	0.60	13851/500	✓	✓	✓	✓	✓	✓							**2KJ3504 - ■■■■■ - ■■ R1**
26.89	54	220	4 690	9.2	0.26	6804/253	✓	✓	✓	✓	✓	✓							**2KJ3504 - ■■■■■ - ■■ Q1**
23.97	60	220	4 440	9.3	0.32	2205/92	✓	✓	✓	✓	✓	✓							**2KJ3504 - ■■■■■ - ■■ P1**
22.12	66	220	4 270	9.3	0.38	6615/299	✓	✓	✓	✓	✓	✓							**2KJ3504 - ■■■■■ - ■■ N1**
19.37	75	220	4 000	9.4	0.47	891/46	✓	✓	✓	✓	✓	✓							**2KJ3504 - ■■■■■ - ■■ M1**
16.98	85	220	3 740	9.6	0.51	1953/115	✓	✓	✓	✓	✓	✓							**2KJ3504 - ■■■■■ - ■■ L1**
15.41	94	220	3 560	9.7	0.67	2835/184	✓	✓	✓	✓	✓	✓							**2KJ3504 - ■■■■■ - ■■ K1**
14.50	100	220	3 450	9.7	0.78	5670/391	✓	✓	✓	✓	✓	✓							**2KJ3504 - ■■■■■ - ■■ J1**
12.78	113	220	3 220	9.7	0.92	294/23	✓	✓	✓	✓	✓	✓							**2KJ3504 - ■■■■■ - ■■ H1**
11.09	131	220	2 990	9.8	1.24	5103/460	✓	✓	✓	✓	✓	✓							**2KJ3504 - ■■■■■ - ■■ G1**
10.04	144	184	2 880	14.7	0.55	231/23	✓	✓	✓	✓	✓	✓							**2KJ3504 - ■■■■■ - ■■ F1**
8.81	165	183	2 790	15.1	0.62	3038/345	✓	✓	✓	✓	✓	✓							**2KJ3504 - ■■■■■ - ■■ E1**
7.99	181	175	2 810	15.3	0.80	735/92	✓	✓	✓	✓	✓	✓							**2KJ3504 - ■■■■■ - ■■ D1**
7.52	193	171	2 810	15.3	0.92	2940/391	✓	✓	✓	✓	✓	✓							**2KJ3504 - ■■■■■ - ■■ C1**
6.63	219	161	2 820	15.3	1.11	1372/207	✓	✓	✓	✓	✓	✓							**2KJ3504 - ■■■■■ - ■■ B1**
5.75	252	150	2 810	15.4	1.49	1323/230	✓	✓	✓	✓	✓	✓							**2KJ3504 - ■■■■■ - ■■ A1**

[1] Only in conjunction with reduced-backlash version

© Siemens AG 2017

Selection and ordering data (continued)

i	n_2	T_{2N}	F_{R2}	φ[1]	J_G	R_{ex}	Motor frame size												Article No.
-	rpm	Nm	N	'	10^{-4} kgm²	-	63	71	80	90	100	112	132	160	180	200	225	250	
K.49																			
200.25	7.2	420	7 820	6.7	0.06	12616/63	✓	✓											2KJ3505 - ■■■■■ - ■■ J2
178.06	8.1	420	7 820	6.8	0.07	6232/35	✓	✓	✓	✓									2KJ3505 - ■■■■■ - ■■ H2
156.34	9.3	420	7 820	6.8	0.08	5472/35	✓	✓	✓	✓									2KJ3505 - ■■■■■ - ■■ G2
142.13	10	420	7 820	6.8	0.10	10944/77	✓	✓	✓	✓									2KJ3505 - ■■■■■ - ■■ F2
121.60	12	420	7 820	6.8	0.12	608/5	✓	✓	✓	✓									2KJ3505 - ■■■■■ - ■■ E2
110.55	13	420	7 820	6.8	0.14	1216/11	✓	✓	✓	✓									2KJ3505 - ■■■■■ - ■■ D2
97.71	15	420	7 710	6.8	0.17	684/7	✓	✓	✓	✓	✓	✓							2KJ3505 - ■■■■■ - ■■ C2
88.83	16	420	7 370	6.8	0.22	6840/77	✓	✓	✓	✓	✓	✓							2KJ3505 - ■■■■■ - ■■ B2
77.81	19	420	6 910	6.9	0.25	1634/21	✓	✓	✓	✓	✓	✓							2KJ3505 - ■■■■■ - ■■ A2
71.82	20	420	6 640	6.9	0.30	6536/91	✓	✓	✓	✓	✓	✓							2KJ3505 - ■■■■■ - ■■ X1
63.59	23	420	6 250	6.9	0.37	3116/49	✓	✓	✓	✓	✓	✓	✓						2KJ3505 - ■■■■■ - ■■ W1
52.93	27	420	5 680	7.0	0.50	741/14	✓	✓	✓	✓	✓	✓	✓						2KJ3505 - ■■■■■ - ■■ V1
49.82	29	420	5 500	7.0	0.58	5928/119	✓	✓	✓	✓	✓	✓	✓						2KJ3505 - ■■■■■ - ■■ U1
44.63	32	420	5 190	7.0	0.65	2812/63	✓	✓	✓	✓	✓	✓	✓						2KJ3505 - ■■■■■ - ■■ T1
38.00	38	420	4 740	7.1	0.84	38/1	✓	✓	✓	✓	✓	✓	✓						2KJ3505 - ■■■■■ - ■■ S1
32.57	45	420	4 340	7.1	1.11	228/7			✓	✓	✓	✓	✓						2KJ3505 - ■■■■■ - ■■ R1
28.05	52	420	3 970	7.2	1.43	589/21			✓	✓	✓	✓	✓						2KJ3505 - ■■■■■ - ■■ Q1
26.30	55	420	3 820	8.6	0.52	55040/2093	✓	✓	✓	✓	✓	✓							2KJ3505 - ■■■■■ - ■■ P1
23.28	62	420	3 540	8.7	0.65	26240/1127	✓	✓	✓	✓	✓	✓	✓						2KJ3505 - ■■■■■ - ■■ N1
19.38	75	420	3 130	8.8	0.90	3120/161	✓	✓	✓	✓	✓	✓	✓						2KJ3505 - ■■■■■ - ■■ M1
18.24	79	420	3 000	8.8	1.03	49920/2737	✓	✓	✓	✓	✓	✓	✓						2KJ3505 - ■■■■■ - ■■ L1
16.34	89	420	2 780	9.0	1.21	23680/1449	✓	✓	✓	✓	✓	✓	✓						2KJ3505 - ■■■■■ - ■■ K1
13.91	104	420	2 880	9.1	1.62	320/23	✓	✓	✓	✓	✓	✓	✓						2KJ3505 - ■■■■■ - ■■ J1
11.93	122	420	3 000	9.3	2.20	1920/161			✓	✓	✓	✓	✓						2KJ3505 - ■■■■■ - ■■ H1
10.27	141	415	3 080	9.5	2.90	4960/483			✓	✓	✓	✓	✓						2KJ3505 - ■■■■■ - ■■ G1
9.75	149	275	2 960	14.2	1.03	39/4	✓	✓	✓	✓	✓	✓	✓						2KJ3505 - ■■■■■ - ■■ F1
9.18	158	270	2 980	14.2	1.19	156/17	✓	✓	✓	✓	✓	✓	✓						2KJ3505 - ■■■■■ - ■■ E1
8.22	176	255	3 010	14.5	1.40	74/9	✓	✓	✓	✓	✓	✓	✓						2KJ3505 - ■■■■■ - ■■ D1
7.00	207	240	3 030	14.8	1.88	7/1	✓	✓	✓	✓	✓	✓	✓						2KJ3505 - ■■■■■ - ■■ C1
6.00	242	225	3 020	15.2	2.50	6/1			✓	✓	✓	✓	✓						2KJ3505 - ■■■■■ - ■■ B1
5.17	280	210	2 990	15.4	3.30	31/6			✓	✓	✓	✓	✓						2KJ3505 - ■■■■■ - ■■ A1

[1] Only in conjunction with reduced-backlash version

© Siemens AG 2017

Selection and ordering data (continued)

i	n_2	T_{2N}	F_{R2}	φ[1]	J_G	R_{ex}	Motor frame size												Article No.
-	rpm	Nm	N	'	10^{-4} kgm²	-	63	71	80	90	100	112	132	160	180	200	225	250	
K.69																			
196.59	7.4	600	10 800	6.4	0.17	14744/75	✓	✓	✓	✓									**2KJ3507 - ■■■■■ - ■■ H2**
178.72	8.1	600	10 800	6.4	0.20	29488/165	✓	✓	✓	✓									**2KJ3507 - ■■■■■ - ■■ G2**
152.00	9.5	600	10 800	6.4	0.25	152/1	✓	✓	✓	✓									**2KJ3507 - ■■■■■ - ■■ F2**
138.18	10	600	10 800	6.4	0.30	1520/11	✓	✓	✓	✓									**2KJ3507 - ■■■■■ - ■■ E2**
123.29	12	600	10 800	6.4	0.35	5548/45	✓	✓	✓	✓	✓	✓							**2KJ3507 - ■■■■■ - ■■ D2**
110.55	13	600	10 800	6.4	0.42	1216/11	✓	✓	✓	✓	✓	✓							**2KJ3507 - ■■■■■ - ■■ C2**
99.64	15	600	10 800	6.4	0.49	4484/45	✓	✓	✓	✓	✓	✓							**2KJ3507 - ■■■■■ - ■■ B2**
91.98	16	600	10 600	6.4	0.58	17936/195	✓	✓	✓	✓	✓	✓							**2KJ3507 - ■■■■■ - ■■ A2**
83.96	17	600	10 100	6.4	0.69	8816/105	✓	✓	✓	✓	✓	✓	✓						**2KJ3507 - ■■■■■ - ■■ X1**
69.67	21	600	9 300	6.5	0.87	209/3	✓	✓	✓	✓	✓	✓	✓						**2KJ3507 - ■■■■■ - ■■ W1**
65.57	22	600	9 030	6.5	1.01	3344/51	✓	✓	✓	✓	✓	✓	✓						**2KJ3507 - ■■■■■ - ■■ V1**
61.93	23	600	8 770	6.5	1.15	1672/27	✓	✓	✓	✓	✓	✓	✓						**2KJ3507 - ■■■■■ - ■■ U1**
52.69	28	600	8 090	6.5	1.40	3952/75	✓	✓	✓	✓	✓	✓	✓						**2KJ3507 - ■■■■■ - ■■ T1**
45.14	32	600	7 470	6.5	1.70	7448/165			✓	✓	✓	✓	✓						**2KJ3507 - ■■■■■ - ■■ S1**
39.69	37	600	6 980	6.5	2.10	1786/45			✓	✓	✓	✓	✓						**2KJ3507 - ■■■■■ - ■■ R1**
33.48	43	580	6 500	6.5	2.60	11552/345			✓	✓	✓	✓	✓						**2KJ3507 - ■■■■■ - ■■ Q1**
29.18	50	555	6 200	6.5	3.50	3648/125			✓	✓	✓	✓	✓						**2KJ3507 - ■■■■■ - ■■ P1**
26.05	56	600	5 500	7.8	1.25	3751/144	✓	✓	✓	✓	✓	✓	✓						**2KJ3507 - ■■■■■ - ■■ N1**
24.52	59	595	5 340	7.8	1.44	3751/153	✓	✓	✓	✓	✓	✓	✓						**2KJ3507 - ■■■■■ - ■■ M1**
23.15	63	585	5 230	7.8	1.63	3751/162	✓	✓	✓	✓	✓	✓	✓						**2KJ3507 - ■■■■■ - ■■ L1**
19.70	74	555	4 950	8.0	2.10	4433/225	✓	✓	✓	✓	✓	✓	✓						**2KJ3507 - ■■■■■ - ■■ K1**
16.88	86	530	4 680	8.0	2.60	1519/90			✓	✓	✓	✓	✓						**2KJ3507 - ■■■■■ - ■■ J1**
14.84	98	515	4 430	8.0	3.30	16027/1080			✓	✓	✓	✓	✓						**2KJ3507 - ■■■■■ - ■■ H1**
12.52	116	490	4 170	8.0	4.30	12958/1035			✓	✓	✓	✓	✓						**2KJ3507 - ■■■■■ - ■■ G1**
10.91	133	470	3 960	8.0	5.70	1364/125			✓	✓	✓	✓	✓						**2KJ3507 - ■■■■■ - ■■ F1**
9.34	155	370	3 640	13.0	2.40	3224/345	✓	✓	✓	✓	✓	✓	✓						**2KJ3507 - ■■■■■ - ■■ E1**
8.01	181	365	3 330	13.0	3.10	6076/759			✓	✓	✓	✓	✓						**2KJ3507 - ■■■■■ - ■■ D1**
7.04	206	365	3 210	13.0	3.90	1457/207			✓	✓	✓	✓	✓						**2KJ3507 - ■■■■■ - ■■ C1**
5.94	244	345	3 350	13.0	5.10	9424/1587			✓	✓	✓	✓	✓						**2KJ3507 - ■■■■■ - ■■ B1**
5.18	280	330	3 420	13.0	6.80	2976/575			✓	✓	✓	✓	✓						**2KJ3507 - ■■■■■ - ■■ A1**

[1] Only in conjunction with reduced-backlash version

© Siemens AG 2017

Selection and ordering data (continued)

i	n_2	T_{2N}	F_{R2}	φ[1]	J_G	R_{ex}	Motor frame size												Article No.
-	rpm	Nm	N	'	10^{-4} kgm²	-	63	71	80	90	100	112	132	160	180	200	225	250	
K.79																			
244.25	5.9	820	13 900	5.7	0.17	175861/720	✓	✓	✓	✓									2KJ3508 - ■■■■■ - ■■ J2
222.05	6.5	820	13 900	5.7	0.20	175861/792	✓	✓	✓	✓									2KJ3508 - ■■■■■ - ■■ H2
188.85	7.7	820	13 900	5.7	0.25	9065/48	✓	✓	✓	✓									2KJ3508 - ■■■■■ - ■■ G2
171.69	8.4	820	13 900	5.7	0.31	45325/264	✓	✓	✓	✓									2KJ3508 - ■■■■■ - ■■ F2
153.18	9.5	820	13 900	5.8	0.35	132349/864	✓	✓	✓	✓	✓	✓							2KJ3508 - ■■■■■ - ■■ E2
137.35	11	820	13 900	5.8	0.42	9065/66	✓	✓	✓	✓	✓	✓							2KJ3508 - ■■■■■ - ■■ D2
123.80	12	820	13 900	5.8	0.50	106967/864	✓	✓	✓	✓	✓	✓							2KJ3508 - ■■■■■ - ■■ C2
114.28	13	820	13 900	5.8	0.59	106967/936	✓	✓	✓	✓	✓	✓							2KJ3508 - ■■■■■ - ■■ B2
104.32	14	820	13 900	5.8	0.70	7511/72	✓	✓	✓	✓	✓	✓	✓						2KJ3508 - ■■■■■ - ■■ A2
86.56	17	820	13 900	5.8	0.89	99715/1152	✓	✓	✓	✓	✓	✓	✓						2KJ3508 - ■■■■■ - ■■ X1
81.47	18	820	13 900	5.8	1.02	99715/1224	✓	✓	✓	✓	✓	✓	✓						2KJ3508 - ■■■■■ - ■■ W1
76.94	19	820	13 900	5.8	1.16	99715/1296	✓	✓	✓	✓	✓	✓	✓						2KJ3508 - ■■■■■ - ■■ V1
65.47	22	820	13 900	5.9	1.42	23569/360	✓	✓	✓	✓	✓	✓	✓						2KJ3508 - ■■■■■ - ■■ U1
56.08	26	820	13 900	5.9	1.73	88837/1584			✓	✓	✓	✓	✓						2KJ3508 - ■■■■■ - ■■ T1
49.31	29	820	13 900	5.9	2.10	85211/1728			✓	✓	✓	✓	✓						2KJ3508 - ■■■■■ - ■■ S1
41.60	35	800	14 000	6.0	2.70	34447/828			✓	✓	✓	✓	✓						2KJ3508 - ■■■■■ - ■■ R1
36.26	40	770	14 000	6.1	3.60	1813/50			✓	✓	✓	✓	✓						2KJ3508 - ■■■■■ - ■■ Q1
32.78	44	820	13 900	7.2	0.94	6293/192	✓	✓	✓	✓	✓	✓	✓						2KJ3508 - ■■■■■ - ■■ P1
27.20	53	800	14 000	7.3	1.23	83545/3072	✓	✓	✓	✓	✓	✓	✓						2KJ3508 - ■■■■■ - ■■ N1
25.60	57	785	14 000	7.3	1.41	83545/3264	✓	✓	✓	✓	✓	✓	✓						2KJ3508 - ■■■■■ - ■■ M1
24.17	60	770	14 000	7.3	1.60	83545/3456	✓	✓	✓	✓	✓	✓	✓						2KJ3508 - ■■■■■ - ■■ L1
20.57	70	740	14 100	7.4	2.00	19747/960	✓	✓	✓	✓	✓	✓	✓						2KJ3508 - ■■■■■ - ■■ K1
17.62	82	715	13 800	7.5	2.60	74431/4224			✓	✓	✓	✓	✓						2KJ3508 - ■■■■■ - ■■ J1
15.49	94	695	13 300	7.6	3.20	71393/4608			✓	✓	✓	✓	✓						2KJ3508 - ■■■■■ - ■■ H1
13.07	111	665	12 600	7.8	4.20	28861/2208			✓	✓	✓	✓	✓						2KJ3508 - ■■■■■ - ■■ G1
11.39	127	645	12 000	8.3	5.50	4557/400			✓	✓	✓	✓	✓						2KJ3508 - ■■■■■ - ■■ F1
10.51	138	445	12 600	10.4	2.30	1209/115	✓	✓	✓	✓	✓	✓	✓						2KJ3508 - ■■■■■ - ■■ E1
9.01	161	450	11 900	10.6	3.00	4557/506			✓	✓	✓	✓	✓						2KJ3508 - ■■■■■ - ■■ D1
7.92	183	450	11 300	10.8	3.70	1457/184			✓	✓	✓	✓	✓						2KJ3508 - ■■■■■ - ■■ C1
6.68	217	455	10 900	11.1	4.90	3534/529			✓	✓	✓	✓	✓						2KJ3508 - ■■■■■ - ■■ B1
5.82	249	430	10 700	12.1	6.60	3348/575			✓	✓	✓	✓	✓						2KJ3508 - ■■■■■ - ■■ A1

[1] Only in conjunction with reduced-backlash version

© Siemens AG 2017

Selection and ordering data (continued)

i	n_2	T_{2N}	F_{R2}	φ[1]	J_G	R_{ex}	Motor frame size												Article No.
-	rpm	Nm	N	‘	10^{-4} kgm²	-	63	71	80	90	100	112	132	160	180	200	225	250	
K.89																			
231.80	6.3	1 600	18 100	5.6	0.42	10199/44		✓	✓	✓									**2KJ3510 - ■■■■■ - ■■ K2**
210.72	6.9	1 600	18 100	5.6	0.51	50995/242		✓	✓	✓									**2KJ3510 - ■■■■■ - ■■ J2**
189.01	7.7	1 600	18 100	5.6	0.71	149695/792		✓	✓	✓	✓	✓							**2KJ3510 - ■■■■■ - ■■ H2**
169.94	8.5	1 600	18 100	5.6	0.80	41125/242		✓	✓	✓	✓	✓							**2KJ3510 - ■■■■■ - ■■ G2**
153.70	9.4	1 600	18 100	5.6	0.88	60865/396		✓	✓	✓	✓	✓							**2KJ3510 - ■■■■■ - ■■ F2**
141.88	10	1 600	18 100	5.6	1.05	60865/429		✓	✓	✓	✓	✓							**2KJ3510 - ■■■■■ - ■■ E2**
129.96	11	1 600	18 100	5.6	1.37	17155/132		✓	✓	✓	✓	✓	✓	✓					**2KJ3510 - ■■■■■ - ■■ D2**
109.04	13	1 600	18 100	5.6	1.45	57575/528		✓	✓	✓	✓	✓	✓	✓					**2KJ3510 - ■■■■■ - ■■ C2**
102.63	14	1 600	18 100	5.6	1.66	57575/561		✓	✓	✓	✓	✓	✓	✓					**2KJ3510 - ■■■■■ - ■■ B2**
94.16	15	1 600	18 100	5.6	1.81	27965/297		✓	✓	✓	✓	✓	✓	✓					**2KJ3510 - ■■■■■ - ■■ A2**
82.25	18	1 600	18 100	5.6	2.60	329/4		✓	✓	✓	✓	✓	✓	✓					**2KJ3510 - ■■■■■ - ■■ X1**
73.64	20	1 600	18 100	5.6	3.20	106925/1452			✓	✓	✓	✓	✓	✓					**2KJ3510 - ■■■■■ - ■■ W1**
64.39	23	1 600	18 100	5.6	3.70	50995/792			✓	✓	✓	✓	✓	✓					**2KJ3510 - ■■■■■ - ■■ V1**
55.27	26	1 600	18 100	5.6	4.10	27965/506			✓	✓	✓	✓	✓	✓					**2KJ3510 - ■■■■■ - ■■ U1**
48.85	30	1 600	18 100	5.6	5.20	16121/330			✓	✓	✓	✓	✓	✓					**2KJ3510 - ■■■■■ - ■■ T1**
41.54	35	1 570	18 100	5.6	6.60	8225/198					✓	✓	✓	✓					**2KJ3510 - ■■■■■ - ■■ S1**
39.29	37	1 600	18 100	7.0	1.86	11315/288		✓	✓	✓	✓	✓	✓	✓					**2KJ3510 - ■■■■■ - ■■ R1**
32.96	44	1 600	18 100	7.0	2.10	37975/1152		✓	✓	✓	✓	✓	✓	✓					**2KJ3510 - ■■■■■ - ■■ Q1**
31.03	47	1 600	18 100	7.0	2.40	37975/1224		✓	✓	✓	✓	✓	✓	✓					**2KJ3510 - ■■■■■ - ■■ P1**
28.46	51	1 600	18 100	7.0	2.70	18445/648		✓	✓	✓	✓	✓	✓	✓					**2KJ3510 - ■■■■■ - ■■ N1**
24.86	58	1 600	18 100	7.1	3.80	2387/96		✓	✓	✓	✓	✓	✓	✓					**2KJ3510 - ■■■■■ - ■■ M1**
22.26	65	1 600	18 100	7.1	4.70	70525/3168			✓	✓	✓	✓	✓	✓					**2KJ3510 - ■■■■■ - ■■ L1**
19.46	75	1 560	17 900	7.1	5.70	33635/1728			✓	✓	✓	✓	✓	✓					**2KJ3510 - ■■■■■ - ■■ K1**
16.71	87	1 480	17 200	7.1	6.80	18445/1104			✓	✓	✓	✓	✓	✓					**2KJ3510 - ■■■■■ - ■■ J1**
14.77	98	1 420	16 600	7.1	8.60	10633/720			✓	✓	✓	✓	✓	✓					**2KJ3510 - ■■■■■ - ■■ H1**
12.56	115	1 330	16 300	7.1	11.00	5425/432					✓	✓	✓	✓					**2KJ3510 - ■■■■■ - ■■ G1**
10.76	135	1 250	16 100	7.1	15.00	775/72					✓	✓	✓	✓					**2KJ3510 - ■■■■■ - ■■ F1**
10.51	138	845	16 100	10.8	6.40	6727/640			✓	✓	✓	✓	✓	✓					**2KJ3510 - ■■■■■ - ■■ E1**
9.02	161	800	15 400	10.8	7.70	33201/3680			✓	✓	✓	✓	✓	✓					**2KJ3510 - ■■■■■ - ■■ D1**
7.97	182	770	14 800	10.8	9.80	31899/4000			✓	✓	✓	✓	✓	✓					**2KJ3510 - ■■■■■ - ■■ C1**
6.78	214	720	14 500	10.8	13.00	217/32					✓	✓	✓	✓					**2KJ3510 - ■■■■■ - ■■ B1**
5.81	250	675	14 200	10.8	17.00	93/16					✓	✓	✓	✓					**2KJ3510 - ■■■■■ - ■■ A1**

[1] Only in conjunction with reduced-backlash version

© Siemens AG 2017

Selection and ordering data (continued)

i	n_2	T_{2N}	F_{R2}	φ[1]	J_G	R_{ex}	Motor frame size												Article No.
-	rpm	Nm	N	'	10^{-4} kgm²	-	63	71	80	90	100	112	132	160	180	200	225	250	
K.109																			
216.65	6.7	2 900	24 500	5.6	1.27	107242/495			✓	✓	✓	✓							**2KJ3511 - ■■■■■ - ■■ H2**
195.60	7.4	2 900	24 500	5.6	1.37	118336/605			✓	✓	✓	✓							**2KJ3511 - ■■■■■ - ■■ G2**
177.43	8.2	2 900	24 500	5.6	1.61	35131/198			✓	✓	✓	✓							**2KJ3511 - ■■■■■ - ■■ F2**
163.78	8.9	2 900	24 500	5.6	1.9	70262/429			✓	✓	✓	✓							**2KJ3511 - ■■■■■ - ■■ E2**
148.88	9.7	2 900	24 500	5.6	2.2	57319/385			✓	✓	✓	✓	✓	✓					**2KJ3511 - ■■■■■ - ■■ D2**
126.07	12	2 900	24 500	5.6	2.6	5547/44			✓	✓	✓	✓	✓	✓					**2KJ3511 - ■■■■■ - ■■ C2**
118.65	12	2 900	24 500	5.6	2.6	22188/187			✓	✓	✓	✓	✓	✓					**2KJ3511 - ■■■■■ - ■■ B2**
109.57	13	2 900	24 500	5.6	4.1	14792/135			✓	✓	✓	✓	✓	✓					**2KJ3511 - ■■■■■ - ■■ A2**
97.49	15	2 900	24 500	5.6	5.0	53621/550			✓	✓	✓	✓	✓	✓					**2KJ3511 - ■■■■■ - ■■ X1**
86.59	17	2 900	24 500	5.7	6.0	31433/363			✓	✓	✓	✓	✓	✓					**2KJ3511 - ■■■■■ - ■■ W1**
77.51	19	2 900	24 500	5.7	5.9	153467/1980			✓	✓	✓	✓	✓	✓					**2KJ3511 - ■■■■■ - ■■ V1**
66.26	22	2 900	24 500	5.7	6.8	251464/3795			✓	✓	✓	✓	✓	✓					**2KJ3511 - ■■■■■ - ■■ U1**
59.17	25	2 900	24 500	5.8	8.6	7396/125			✓	✓	✓	✓	✓	✓	✓				**2KJ3511 - ■■■■■ - ■■ T1**
52.29	28	2 900	24 500	5.8	9.7	25886/495					✓	✓	✓	✓	✓				**2KJ3511 - ■■■■■ - ■■ S1**
45.89	32	2 900	24 500	5.8	14	159014/3465					✓	✓	✓	✓	✓				**2KJ3511 - ■■■■■ - ■■ R1**
39.95	36	2 820	23 900	5.8	17	151618/3795					✓	✓	✓	✓	✓				**2KJ3511 - ■■■■■ - ■■ Q1**
34.15	42	2 710	22 700	5.8	21	118336/3465					✓	✓	✓	✓	✓				**2KJ3511 - ■■■■■ - ■■ P1**
29.23	50	2 620	21 500	5.8	27	7396/253					✓	✓	✓	✓	✓				**2KJ3511 - ■■■■■ - ■■ N1**
24.98	58	2 380	21 000	6.9	9.9	163744/6555			✓	✓	✓	✓	✓	✓					**2KJ3511 - ■■■■■ - ■■ M1**
22.31	65	2 380	20 000	7.1	13	52976/2375			✓	✓	✓	✓	✓	✓	✓				**2KJ3511 - ■■■■■ - ■■ L1**
19.71	74	2 380	18 900	7.1	15	16856/855					✓	✓	✓	✓	✓				**2KJ3511 - ■■■■■ - ■■ K1**
17.30	84	2 400	17 800	7.1	20	14792/855					✓	✓	✓	✓	✓				**2KJ3511 - ■■■■■ - ■■ J1**
15.06	96	2 310	17 500	7.1	25	98728/6555					✓	✓	✓	✓	✓				**2KJ3511 - ■■■■■ - ■■ H1**
12.87	113	2 200	17 500	7.1	33	11008/855					✓	✓	✓	✓	✓				**2KJ3511 - ■■■■■ - ■■ G1**
11.02	132	2 100	17 400	7.2	43	4816/437					✓	✓	✓	✓	✓				**2KJ3511 - ■■■■■ - ■■ F1**
10.45	139	1 260	17 600	10.8	17	784/75					✓	✓	✓	✓	✓				**2KJ3511 - ■■■■■ - ■■ E1**
9.17	158	1 270	16 700	10.8	23	688/75					✓	✓	✓	✓	✓				**2KJ3511 - ■■■■■ - ■■ D1**
7.99	181	1 280	16 300	10.8	29	4592/575					✓	✓	✓	✓	✓				**2KJ3511 - ■■■■■ - ■■ C1**
6.83	212	1 300	16 000	10.8	38	512/75					✓	✓	✓	✓	✓				**2KJ3511 - ■■■■■ - ■■ B1**
5.84	248	1 300	15 700	11.0	49	672/115					✓	✓	✓	✓	✓				**2KJ3511 - ■■■■■ - ■■ A1**

[1] Only in conjunction with reduced-backlash version

© Siemens AG 2017

Selection and ordering data (continued)

i	n_2	T_{2N}	F_{R2}	φ[1]	J_G	R_{ex}	Motor frame size												Article No.
-	rpm	Nm	N	'	10^{-4} kgm²	-	63	71	80	90	100	112	132	160	180	200	225	250	
K.129																			
228.30	6.4	4 400	37 600	6.3	3.3	30821/135				✓	✓	✓							**2KJ3512 - ■■■■■ - ■■ J2**
210.74	6.9	4 400	37 600	6.3	3.9	123284/585				✓	✓	✓							**2KJ3512 - ■■■■■ - ■■ H2**
194.04	7.5	4 400	37 600	6.3	4.5	8732/45				✓	✓	✓	✓	✓					**2KJ3512 - ■■■■■ - ■■ G2**
165.47	8.8	4 400	37 600	6.3	5.6	5957/36				✓	✓	✓	✓	✓					**2KJ3512 - ■■■■■ - ■■ F2**
155.74	9.3	4 400	37 600	6.3	6.4	23828/153				✓	✓	✓	✓	✓					**2KJ3512 - ■■■■■ - ■■ E2**
144.53	10	4 400	37 600	6.3	7.0	58534/405				✓	✓	✓	✓	✓					**2KJ3512 - ■■■■■ - ■■ D2**
127.77	11	4 400	37 600	6.3	8.4	9583/75				✓	✓	✓	✓	✓					**2KJ3512 - ■■■■■ - ■■ C2**
114.06	13	4 400	37 600	6.3	10	56462/495				✓	✓	✓	✓	✓					**2KJ3512 - ■■■■■ - ■■ B2**
102.64	14	4 400	37 600	6.3	12	27713/270				✓	✓	✓	✓	✓					**2KJ3512 - ■■■■■ - ■■ A2**
89.09	16	4 400	37 600	6.3	14	92204/1035				✓	✓	✓	✓	✓					**2KJ3512 - ■■■■■ - ■■ X1**
80.12	18	4 400	37 600	6.3	17	30044/375				✓	✓	✓	✓	✓	✓				**2KJ3512 - ■■■■■ - ■■ W1**
70.03	21	4 400	37 600	6.3	19	18907/270					✓	✓	✓	✓	✓	✓			**2KJ3512 - ■■■■■ - ■■ V1**
62.49	23	4 400	36 200	6.4	23	2812/45					✓	✓	✓	✓	✓	✓	✓		**2KJ3512 - ■■■■■ - ■■ U1**
55.05	26	4 400	34 300	6.4	27	11396/207					✓	✓	✓	✓	✓	✓	✓		**2KJ3512 - ■■■■■ - ■■ T1**
48.24	30	4 400	32 400	6.4	33	6512/135					✓	✓	✓	✓	✓	✓	✓		**2KJ3512 - ■■■■■ - ■■ S1**
42.04	34	4 400	30 500	6.4	39	14504/345					✓	✓	✓	✓	✓	✓	✓		**2KJ3512 - ■■■■■ - ■■ R1**
38.37	38	4 400	29 200	6.9	45	1036/27					✓	✓	✓	✓	✓	✓	✓		**2KJ3512 - ■■■■■ - ■■ Q1**
33.03	44	4 400	27 300	7.0	55	11396/345							✓	✓	✓	✓	✓		**2KJ3512 - ■■■■■ - ■■ P1**
31.55	46	4 400	26 700	7.0	23	3944/125				✓	✓	✓	✓	✓	✓				**2KJ3512 - ■■■■■ - ■■ N1**
27.58	53	4 400	25 000	7.0	27	1241/45					✓	✓	✓	✓	✓	✓			**2KJ3512 - ■■■■■ - ■■ M1**
24.61	59	4 400	23 700	7.1	33	2584/105					✓	✓	✓	✓	✓	✓	✓		**2KJ3512 - ■■■■■ - ■■ L1**
21.68	67	4 270	22 700	7.1	40	1496/69					✓	✓	✓	✓	✓	✓	✓		**2KJ3512 - ■■■■■ - ■■ K1**
19.00	76	4 140	21 700	7.1	50	5984/315					✓	✓	✓	✓	✓	✓	✓		**2KJ3512 - ■■■■■ - ■■ J1**
16.56	88	4 020	20 600	7.2	62	1904/115					✓	✓	✓	✓	✓	✓	✓		**2KJ3512 - ■■■■■ - ■■ H1**
15.11	96	3 940	20 000	7.2	72	136/9					✓	✓	✓	✓	✓	✓	✓		**2KJ3512 - ■■■■■ - ■■ G1**
13.01	111	3 810	19 000	7.2	91	1496/115							✓	✓	✓	✓	✓		**2KJ3512 - ■■■■■ - ■■ F1**
11.80	123	2 830	21 400	9.5	46	119680/10143					✓	✓	✓	✓	✓	✓	✓		**2KJ3512 - ■■■■■ - ■■ E1**
10.34	140	2 850	20 100	9.6	57	95744/9261					✓	✓	✓	✓	✓	✓	✓		**2KJ3512 - ■■■■■ - ■■ D1**
9.01	161	2 760	19 500	9.7	71	4352/483					✓	✓	✓	✓	✓	✓	✓		**2KJ3512 - ■■■■■ - ■■ C1**
8.22	176	2 680	19 500	9.8	83	10880/1323					✓	✓	✓	✓	✓	✓	✓		**2KJ3512 - ■■■■■ - ■■ B1**
7.08	205	2 530	19 500	9.9	107	23936/3381							✓	✓	✓	✓	✓		**2KJ3512 - ■■■■■ - ■■ A1**

[1] Only in conjunction with reduced-backlash version

© Siemens AG 2017

Selection and ordering data (continued)

i	n_2	T_{2N}	F_{R2}	φ[1]	J_G	R_{ex}	Motor frame size											Article No.
-	rpm	Nm	N	‘	10^{-4} kgm²	-	63	71	80	90	100	112	132	160	180	200	225	250	
K.149																			
237.03	6.1	8 000	65 000	5.3	7.1	83433/352				✓	✓	✓	✓	✓					**2KJ3513 - ■■■■■ - ■■ J2**
202.86	7.1	8 000	65 000	5.3	9.0	285621/1408				✓	✓	✓	✓	✓					**2KJ3513 - ■■■■■ - ■■ H2**
190.92	7.6	8 000	65 000	5.3	10	285621/1496				✓	✓	✓	✓	✓					**2KJ3513 - ■■■■■ - ■■ G2**
178.97	8.1	8 000	65 000	5.3	11	188993/1056				✓	✓	✓	✓	✓					**2KJ3513 - ■■■■■ - ■■ F2**
158.65	9.1	8 000	65 000	5.3	14	558453/3520				✓	✓	✓	✓	✓					**2KJ3513 - ■■■■■ - ■■ E2**
140.93	10	8 000	64 100	5.3	16	17052/121				✓	✓	✓	✓	✓					**2KJ3513 - ■■■■■ - ■■ D2**
127.16	11	8 000	61 400	5.3	19	89523/704				✓	✓	✓	✓	✓					**2KJ3513 - ■■■■■ - ■■ C2**
112.68	13	8 000	58 400	5.3	23	456141/4048				✓	✓	✓	✓	✓					**2KJ3513 - ■■■■■ - ■■ B2**
99.79	15	8 000	55 600	5.4	26	439089/4400				✓	✓	✓	✓	✓	✓				**2KJ3513 - ■■■■■ - ■■ A2**
88.81	16	8 000	52 900	5.4	31	1421/16					✓	✓	✓	✓	✓	✓			**2KJ3513 - ■■■■■ - ■■ X1**
79.59	18	8 000	50 400	5.4	37	14007/176					✓	✓	✓	✓	✓	✓	✓		**2KJ3513 - ■■■■■ - ■■ W1**
70.56	21	8 000	47 900	5.4	43	285621/4048					✓	✓	✓	✓	✓	✓	✓		**2KJ3513 - ■■■■■ - ■■ V1**
62.28	23	8 000	45 300	5.4	52	5481/88					✓	✓	✓	✓	✓	✓	✓	✓	**2KJ3513 - ■■■■■ - ■■ U1**
54.76	26	8 000	42 700	5.4	63	55419/1012					✓	✓	✓	✓	✓	✓	✓	✓	**2KJ3513 - ■■■■■ - ■■ T1**
49.60	29	8 000	40 800	5.4	70	8729/176					✓	✓	✓	✓	✓	✓	✓	✓	**2KJ3513 - ■■■■■ - ■■ S1**
43.18	34	8 000	38 200	5.4	85	174783/4048							✓	✓	✓	✓	✓	✓	**2KJ3513 - ■■■■■ - ■■ R1**
35.40	41	7 850	35 100	5.5	110	80997/2288							✓	✓	✓	✓	✓	✓	**2KJ3513 - ■■■■■ - ■■ Q1**
32.33	45	7 760	33 900	6.1	49	12673/392					✓	✓	✓	✓	✓	✓	✓		**2KJ3513 - ■■■■■ - ■■ P1**
28.66	51	7 630	32 200	6.1	59	36917/1288					✓	✓	✓	✓	✓	✓	✓		**2KJ3513 - ■■■■■ - ■■ N1**
25.30	57	7 420	30 900	6.1	73	4959/196					✓	✓	✓	✓	✓	✓	✓	✓	**2KJ3513 - ■■■■■ - ■■ M1**
22.25	65	7 210	29 500	6.2	89	7163/322					✓	✓	✓	✓	✓	✓	✓	✓	**2KJ3513 - ■■■■■ - ■■ L1**
20.15	72	7 070	28 400	6.2	103	23693/1176					✓	✓	✓	✓	✓	✓	✓	✓	**2KJ3513 - ■■■■■ - ■■ K1**
17.54	83	6 890	28 500	6.3	128	22591/1288							✓	✓	✓	✓	✓	✓	**2KJ3513 - ■■■■■ - ■■ J1**
14.38	101	6 660	29 000	6.3	174	10469/728							✓	✓	✓	✓	✓	✓	**2KJ3513 - ■■■■■ - ■■ H1**
14.15	102	4 140	31 100	8.0	79	17328/1225					✓	✓	✓	✓	✓	✓	✓	✓	**2KJ3513 - ■■■■■ - ■■ G1**
12.44	117	4 030	29 800	8.0	97	150176/12075					✓	✓	✓	✓	✓	✓	✓	✓	**2KJ3513 - ■■■■■ - ■■ F1**
11.26	129	3 950	28 800	8.1	113	124184/11025					✓	✓	✓	✓	✓	✓	✓	✓	**2KJ3513 - ■■■■■ - ■■ E1**
9.81	148	3 850	28 400	8.2	141	118408/12075							✓	✓	✓	✓	✓	✓	**2KJ3513 - ■■■■■ - ■■ D1**
8.04	180	3 720	28 000	8.3	194	54872/6825							✓	✓	✓	✓	✓	✓	**2KJ3513 - ■■■■■ - ■■ C1**
6.82	213	3 630	27 500	8.4	266	89528/13125							✓	✓	✓	✓	✓	✓	**2KJ3513 - ■■■■■ - ■■ B1**

[1] Only in conjunction with reduced-backlash version

© Siemens AG 2017

Selection and ordering data (continued)

i	n_2	T_{2N}	F_{R2}	φ[1]	J_G	R_{ex}	Motor frame size												Article No.
-	rpm	Nm	N	'	10^{-4} kgm²	-	63	71	80	90	100	112	132	160	180	200	225	250	
K.169																			
223.30	6.5	13 000	70 000	5.2	18	273319/1224					✓	✓	✓	✓					**2KJ3514 - ■■■■■ - ■■ F2**
208.35	7.0	13 000	70 000	5.2	20	135013/648					✓	✓	✓	✓					**2KJ3514 - ■■■■■ - ■■ E2**
185.23	7.8	13 000	70 000	5.2	24	29637/160					✓	✓	✓	✓					**2KJ3514 - ■■■■■ - ■■ D2**
166.31	8.7	13 000	70 000	5.2	28	16465/99					✓	✓	✓	✓					**2KJ3514 - ■■■■■ - ■■ C2**
150.55	9.6	13 000	70 000	5.2	33	260147/1728					✓	✓	✓	✓					**2KJ3514 - ■■■■■ - ■■ B2**
132.24	11	13 000	70 000	5.2	40	437969/3312					✓	✓	✓	✓					**2KJ3514 - ■■■■■ - ■■ A2**
119.83	12	13 000	70 000	5.2	47	431383/3600					✓	✓	✓	✓	✓				**2KJ3514 - ■■■■■ - ■■ X1**
106.72	14	13 000	70 000	5.2	54	23051/216					✓	✓	✓	✓	✓	✓			**2KJ3514 - ■■■■■ - ■■ W1**
95.83	15	13 000	70 000	5.2	65	36223/378					✓	✓	✓	✓	✓	✓	✓		**2KJ3514 - ■■■■■ - ■■ V1**
85.51	17	13 000	70 000	5.2	75	141599/1656					✓	✓	✓	✓	✓	✓	✓		**2KJ3514 - ■■■■■ - ■■ U1**
76.23	19	13 000	70 000	5.2	88	16465/216					✓	✓	✓	✓	✓	✓	✓	✓	**2KJ3514 - ■■■■■ - ■■ T1**
67.61	21	13 000	66 900	5.3	103	55981/828					✓	✓	✓	✓	✓	✓	✓	✓	**2KJ3514 - ■■■■■ - ■■ S1**
62.07	23	13 000	64 500	5.3	114	62567/1008					✓	✓	✓	✓	✓	✓	✓	✓	**2KJ3514 - ■■■■■ - ■■ R1**
54.68	27	13 000	60 900	5.3	134	181115/3312							✓	✓	✓	✓	✓	✓	**2KJ3514 - ■■■■■ - ■■ Q1**
44.86	32	13 000	55 700	5.3	180	55981/1248							✓	✓	✓	✓	✓	✓	**2KJ3514 - ■■■■■ - ■■ P1**
39.33	37	13 000	52 300	5.3	198	141599/3600							✓	✓	✓	✓	✓	✓	**2KJ3514 - ■■■■■ - ■■ N1**
30.75	47	13 000	46 500	5.4	309	42809/1392							✓	✓	✓	✓	✓	✓	**2KJ3514 - ■■■■■ - ■■ M1**
29.43	49	13 000	45 500	5.8	133	25721/874					✓	✓	✓	✓	✓	✓	✓	✓	**2KJ3514 - ■■■■■ - ■■ L1**
27.02	54	13 000	43 500	5.9	151	1513/56					✓	✓	✓	✓	✓	✓	✓	✓	**2KJ3514 - ■■■■■ - ■■ K1**
23.80	61	13 000	40 800	5.9	181	83215/3496							✓	✓	✓	✓	✓	✓	**2KJ3514 - ■■■■■ - ■■ J1**
19.53	74	12 700	40 000	6.0	249	77163/3952							✓	✓	✓	✓	✓	✓	**2KJ3514 - ■■■■■ - ■■ H1**
17.12	85	12 400	40 800	6.0	288	65059/3800							✓	✓	✓	✓	✓	✓	**2KJ3514 - ■■■■■ - ■■ G1**
13.39	108	11 900	41 300	6.2	457	59007/4408							✓	✓	✓	✓	✓	✓	**2KJ3514 - ■■■■■ - ■■ F1**
12.20	119	6 760	38 700	8.1	202	143990/11799							✓	✓	✓	✓	✓	✓	**2KJ3514 - ■■■■■ - ■■ E1**
10.01	145	6 530	37 800	8.3	280	22253/2223							✓	✓	✓	✓	✓	✓	**2KJ3514 - ■■■■■ - ■■ D1**
8.78	165	6 360	37 800	8.3	328	112574/12825							✓	✓	✓	✓	✓	✓	**2KJ3514 - ■■■■■ - ■■ C1**
6.86	211	6 130	37 300	8.8	523	34034/4959							✓	✓	✓	✓	✓	✓	**2KJ3514 - ■■■■■ - ■■ B1**

[1] Only in conjunction with reduced-backlash version

© Siemens AG 2017

Selection and ordering data (continued)

i	n_2	T_{2N}	F_{R2}	φ[1]	J_G	R_{ex}	Motor frame size											Article No.
-	rpm	Nm	N	'	10^{-4} kgm²	-	63	71	80	90	100	112	132	160	180	200	225	250	
K.189																			
199.51	7.3	19 100	104 000	4.8	37	186543/935						✓	✓	✓					2KJ3515 - ■■■■■ - ■■ W1
178.49	8.1	19 500	104 000	4.8	43	367164/2057						✓	✓	✓					2KJ3515 - ■■■■■ - ■■ V1
160.98	9	19 500	104 000	4.8	50	60207/374						✓	✓	✓					2KJ3515 - ■■■■■ - ■■ U1
142.28	10	19 500	104 000	4.8	62	611940/4301						✓	✓	✓					2KJ3515 - ■■■■■ - ■■ T1
130.05	11	19 500	104 000	4.8	73	55272/425						✓	✓	✓	✓				2KJ3515 - ■■■■■ - ■■ S1
117.00	12	19 500	104 000	4.8	86	43757/374						✓	✓	✓	✓	✓			2KJ3515 - ■■■■■ - ■■ R1
104.56	14	19 500	104 000	4.8	100	19552/187						✓	✓	✓	✓	✓	✓		2KJ3515 - ■■■■■ - ■■ Q1
94.55	15	19 500	104 000	4.8	119	406644/4301						✓	✓	✓	✓	✓	✓		2KJ3515 - ■■■■■ - ■■ P1
83.44	17	19 500	104 000	4.8	140	15604/187						✓	✓	✓	✓	✓	✓	✓	2KJ3515 - ■■■■■ - ■■ N1
74.35	20	19 500	104 000	4.8	164	319788/4301						✓	✓	✓	✓	✓	✓	✓	2KJ3515 - ■■■■■ - ■■ M1
67.36	22	19 500	104 000	4.8	182	12596/187						✓	✓	✓	✓	✓	✓	✓	2KJ3515 - ■■■■■ - ■■ L1
60.58	24	19 500	104 000	4.8	220	23688/391							✓	✓	✓	✓	✓	✓	2KJ3515 - ■■■■■ - ■■ K1
50.34	29	19 500	104 000	4.8	273	122388/2431							✓	✓	✓	✓	✓	✓	2KJ3515 - ■■■■■ - ■■ J1
44.76	32	19 500	99 100	4.8	334	209244/4675							✓	✓	✓	✓	✓	✓	2KJ3515 - ■■■■■ - ■■ H1
35.67	41	19 500	89 900	4.9	455	193452/5423							✓	✓	✓	✓	✓	✓	2KJ3515 - ■■■■■ - ■■ G1
28.39	51	19 500	81 300	5.0	586	153972/5423									✓	✓	✓	✓	2KJ3515 - ■■■■■ - ■■ F1
25.37	57	19 500	77 300	5.3	335	11088/437							✓	✓	✓	✓	✓	✓	2KJ3515 - ■■■■■ - ■■ E1
21.09	69	19 500	70 900	5.4	439	5208/247							✓	✓	✓	✓	✓	✓	2KJ3515 - ■■■■■ - ■■ D1
18.75	77	19 500	67 000	5.4	545	8904/475							✓	✓	✓	✓	✓	✓	2KJ3515 - ■■■■■ - ■■ C1
14.94	97	19 500	60 000	5.6	786	8232/551							✓	✓	✓	✓	✓	✓	2KJ3515 - ■■■■■ - ■■ B1
11.89	122	19 500	61 300	5.7	1 109	6552/551									✓	✓	✓	✓	2KJ3515 - ■■■■■ - ■■ A1

[1] Only in conjunction with reduced-backlash version

© Siemens AG 2017

Selection and ordering data

i	n_2	T_{2N}	F_{R2}	φ [1]	J_G	R_{ex}	Motor frame size								Article No.
-	rpm	Nm	N	'	10^{-4} kgm²	-	63	71	80	90	100	112	132	160	
K.39-D19															
6 699	0.22	220	6 080	-	0.11	167640192/25025	✓	✓							**2KJ3521 - ■■■■■ - ■■ H1**
5 949	0.24	220	6 080	-	0.13	13533453/2275	✓	✓							**2KJ3521 - ■■■■■ - ■■ G1**
5 491	0.26	220	6 080	-	0.16	162401436/29575	✓	✓							**2KJ3521 - ■■■■■ - ■■ F1**
4 770	0.30	220	6 080	-	0.17	75961962/15925	✓	✓							**2KJ3521 - ■■■■■ - ■■ E1**
4 145	0.35	220	6 080	-	0.18	47148804/11375	✓	✓							**2KJ3521 - ■■■■■ - ■■ D1**
3 742	0.39	220	6 080	-	0.22	1309689/350	✓	✓							**2KJ3521 - ■■■■■ - ■■ C1**
3 522	0.41	220	6 080	-	0.26	10477512/2975	✓	✓							**2KJ3521 - ■■■■■ - ■■ B1**
3 070	0.47	220	6 080	-	0.29	6985008/2275	✓	✓							**2KJ3521 - ■■■■■ - ■■ A1**
K.39-Z19															
3 001	0.48	220	6 080	-	0.02	975384/325	✓	✓							**2KJ3520 - ■■■■■ - ■■ E2**
2 657	0.55	220	6 080	-	0.03	4318434/1625	✓	✓	✓						**2KJ3520 - ■■■■■ - ■■ D2**
2 309	0.63	220	6 080	-	0.04	3752082/1625	✓	✓	✓						**2KJ3520 - ■■■■■ - ■■ C2**
2 099	0.69	220	6 080	-	0.05	7504164/3575	✓	✓	✓						**2KJ3520 - ■■■■■ - ■■ B2**
1 786	0.81	220	6 080	-	0.07	2902554/162	✓	✓	✓						**2KJ3520 - ■■■■■ - ■■ A2**
1 624	0.89	220	6 080	-	0.08	5805108/3575	✓	✓	✓						**2KJ3520 - ■■■■■ - ■■ X1**
1 416	1.0	220	6 080	-	0.09	35397/25	✓	✓	✓						**2KJ3520 - ■■■■■ - ■■ W1**
1 267	1.1	220	6 080	-	0.12	4530816/3575	✓	✓	✓						**2KJ3520 - ■■■■■ - ■■ V1**
1 125	1.3	220	6 080	-	0.15	365769/325	✓	✓	✓						**2KJ3520 - ■■■■■ - ■■ U1**
1 039	1.4	220	6 080	-	0.18	4389228/4225	✓	✓	✓						**2KJ3520 - ■■■■■ - ■■ T1**
902	1.6	220	6 080	-	0.20	2053026/2275	✓	✓	✓						**2KJ3520 - ■■■■■ - ■■ S1**
784	1.8	220	6 080	-	0.21	1274292/1625	✓	✓	✓						**2KJ3520 - ■■■■■ - ■■ R1**
708	2.0	220	6 080	-	0.27	35397/50	✓	✓	✓						**2KJ3520 - ■■■■■ - ■■ Q1**
666	2.2	220	6 080	-	0.32	283176/425	✓	✓	✓						**2KJ3520 - ■■■■■ - ■■ P1**
581	2.5	220	6 080	-	0.36	188784/325	✓	✓	✓						**2KJ3520 - ■■■■■ - ■■ N1**
536	2.7	220	6 080	-	0.19	243846/455	✓	✓	✓						**2KJ3520 - ■■■■■ - ■■ M1**
466	3.1	220	6 080	-	0.22	114057/245	✓	✓	✓						**2KJ3520 - ■■■■■ - ■■ L1**
405	3.6	220	6 080	-	0.23	70794/175	✓	✓	✓						**2KJ3520 - ■■■■■ - ■■ K1**
365	4.0	220	6 080	-	0.29	51129/140	✓	✓	✓						**2KJ3520 - ■■■■■ - ■■ J1**
343.72	4.2	220	6 080	-	0.35	204516/595	✓	✓	✓						**2KJ3520 - ■■■■■ - ■■ H1**
329.29	4.4	220	6 080	-	0.32	699732/2125	✓	✓	✓						**2KJ3520 - ■■■■■ - ■■ G1**
287.07	5.1	220	6 080	-	0.37	466488/1625	✓	✓	✓						**2KJ3520 - ■■■■■ - ■■ F1**
264.86	5.5	220	6 080	-	0.19	602547/2275	✓	✓	✓						**2KJ3520 - ■■■■■ - ■■ E1**
230.07	6.3	220	6 080	-	0.22	563673/2450	✓	✓	✓						**2KJ3520 - ■■■■■ - ■■ D1**
199.92	7.3	220	6 080	-	0.23	174933/875	✓	✓	✓						**2KJ3520 - ■■■■■ - ■■ C1**
180.49	8.0	220	6 080	-	0.30	252681/1400	✓	✓	✓						**2KJ3520 - ■■■■■ - ■■ B1**
169.87	8.5	220	6 080	-	0.35	505362/2975	✓	✓	✓						**2KJ3520 - ■■■■■ - ■■ A1**

[1] Only in conjunction with reduced-backlash version

© Siemens AG 2017

Transmission ratios and torques for very low speeds

Selection and ordering data (continued)

i	n_2	T_{2N}	F_{R2}	φ [1]	J_G	R_{ex}	Motor frame size								Article No.
-	rpm	Nm	N	'	10^{-4} kgm²	-	63	71	80	90	100	112	132	160	
K.49-D19															
9 641	0.15	420	7 820	-	0.08	67488/7	✓	✓							**2KJ3523 - ■■■■■ - ■■ J1**
8 630	0.17	420	7 820	-	0.11	8638464/1001	✓	✓							**2KJ3523 - ■■■■■ - ■■ H1**
7 663	0.19	420	7 820	-	0.13	697376/91	✓	✓							**2KJ3523 - ■■■■■ - ■■ G1**
7 074	0.20	420	7 820	-	0.16	8368512/1183	✓	✓							**2KJ3523 - ■■■■■ - ■■ F1**
6 145	0.24	420	7 820	-	0.17	3914304/637	✓	✓							**2KJ3523 - ■■■■■ - ■■ E1**
5 340	0.27	420	7 820	-	0.18	2429568/455	✓	✓							**2KJ3523 - ■■■■■ - ■■ D1**
4 821	0.30	420	7 820	-	0.22	33744/7	✓	✓							**2KJ3523 - ■■■■■ - ■■ C1**
4 537	0.32	420	7 820	-	0.26	539904/119	✓	✓							**2KJ3523 - ■■■■■ - ■■ B1**
3 955	0.37	420	7 820	-	0.29	359936/91	✓	✓							**2KJ3523 - ■■■■■ - ■■ A1**
K.49-Z19															
3 866	0.38	420	7 820	-	0.02	150784/39	✓	✓							**2KJ3522 - ■■■■■ - ■■ G2**
3 424	0.42	420	7 820	-	0.03	222528/65	✓	✓	✓						**2KJ3522 - ■■■■■ - ■■ F2**
2 975	0.49	420	7 820	-	0.04	193344/65	✓	✓	✓						**2KJ3522 - ■■■■■ - ■■ E2**
2 704	0.54	420	7 820	-	0.05	386688/143	✓	✓	✓						**2KJ3522 - ■■■■■ - ■■ D2**
2 301	0.63	420	7 820	-	0.07	149568/65	✓	✓	✓						**2KJ3522 - ■■■■■ - ■■ C2**
2 092	0.69	420	7 820	-	0.08	299136/143	✓	✓	✓						**2KJ3522 - ■■■■■ - ■■ B2**
1 824	0.79	420	7 820	-	0.09	1824/1	✓	✓	✓						**2KJ3522 - ■■■■■ - ■■ A2**
1 633	0.89	420	7 820	-	0.12	233472/143	✓	✓	✓						**2KJ3522 - ■■■■■ - ■■ W1**
1 450	1.0	420	7 820	-	0.15	18848/13	✓	✓	✓						**2KJ3522 - ■■■■■ - ■■ V1**
1 338	1.1	420	7 820	-	0.18	226176/169	✓	✓	✓						**2KJ3522 - ■■■■■ - ■■ U1**
1 163	1.2	420	7 820	-	0.20	105792/91	✓	✓	✓						**2KJ3522 - ■■■■■ - ■■ T1**
1 010	1.4	420	7 820	-	0.21	65664/65	✓	✓	✓						**2KJ3522 - ■■■■■ - ■■ S1**
912	1.6	420	7 820	-	0.27	912/1	✓	✓	✓						**2KJ3522 - ■■■■■ - ■■ R1**
858	1.7	420	7 820	-	0.32	14592/17	✓	✓	✓						**2KJ3522 - ■■■■■ - ■■ Q1**
748	1.9	420	7 820	-	0.36	9728/13	✓	✓	✓						**2KJ3522 - ■■■■■ - ■■ P1**
690	2.1	420	7 820	-	0.19	188480/273	✓	✓	✓						**2KJ3522 - ■■■■■ - ■■ N1**
600	2.4	420	7 820	-	0.22	88160/147	✓	✓	✓						**2KJ3522 - ■■■■■ - ■■ M1**
521	2.8	420	7 820	-	0.23	3648/7	✓	✓	✓						**2KJ3522 - ■■■■■ - ■■ L1**
470	3.1	420	7 820	-	0.30	9880/21	✓	✓	✓						**2KJ3522 - ■■■■■ - ■■ K1**
443	3.3	420	7 820	-	0.35	158080/357	✓	✓	✓						**2KJ3522 - ■■■■■ - ■■ J1**
437	3.3	420	7 820	-	0.27	24453/56	✓	✓	✓						**2KJ3522 - ■■■■■ - ■■ H1**
411	3.5	420	7 820	-	0.32	48906/119	✓	✓	✓						**2KJ3522 - ■■■■■ - ■■ G1**
358	4.1	420	7 820	-	0.37	2508/7	✓	✓	✓						**2KJ3522 - ■■■■■ - ■■ F1**
330.56	4.4	420	7 820	-	0.20	32395/98	✓	✓	✓						**2KJ3522 - ■■■■■ - ■■ E1**
287.15	5.0	420	7 820	-	0.23	393965/1372	✓	✓	✓						**2KJ3522 - ■■■■■ - ■■ D1**
249.52	5.8	420	7 820	-	0.24	24453/98	✓	✓	✓						**2KJ3522 - ■■■■■ - ■■ C1**
225.26	6.4	420	7 820	-	0.31	176605/784	✓	✓	✓						**2KJ3522 - ■■■■■ - ■■ B1**
212.01	6.8	420	7 820	-	0.37	176605/833	✓	✓	✓						**2KJ3522 - ■■■■■ - ■■ A1**

[1] Only in conjunction with reduced-backlash version

© Siemens AG 2017

Selection and ordering data (continued)

i	n_2	T_{2N}	F_{R2}	φ [1]	J_G	R_{ex}	Motor frame size								Article No.
-	rpm	Nm	N	'	10^{-4} kgm²	-	63	71	80	90	100	112	132	160	
K.69-D19															
9 641	0.15	600	10 800	-	0.08	67488/7	✓	✓							2KJ3525 - ■■■■■ - ■■ J1
8 630	0.17	600	10 800	-	0.11	8638464/1001	✓	✓							2KJ3525 - ■■■■■ - ■■ H1
7 663	0.19	600	10 800	-	0.13	697376/91	✓	✓							2KJ3525 - ■■■■■ - ■■ G1
7 074	0.20	600	10 800	-	0.16	8368512/1183	✓	✓							2KJ3525 - ■■■■■ - ■■ F1
6 145	0.24	600	10 800	-	0.17	3914304/637	✓	✓							2KJ3525 - ■■■■■ - ■■ E1
5 340	0.27	600	10 800	-	0.18	2429568/455	✓	✓							2KJ3525 - ■■■■■ - ■■ D1
4 821	0.30	600	10 800	-	0.22	33744/7	✓	✓							2KJ3525 - ■■■■■ - ■■ C1
4 537	0.32	600	10 800	-	0.26	539904/119	✓	✓							2KJ3525 - ■■■■■ - ■■ B1
3 955	0.37	600	10 800	-	0.29	359936/91	✓	✓							2KJ3525 - ■■■■■ - ■■ A1
K.69-Z19															
3 866	0.38	600	10 800	-	0.02	150784/39	✓	✓							2KJ3524 - ■■■■■ - ■■ F2
3 424	0.42	600	10 800	-	0.03	222528/65	✓	✓	✓						2KJ3524 - ■■■■■ - ■■ E2
2 975	0.49	600	10 800	-	0.04	193344/65	✓	✓	✓						2KJ3524 - ■■■■■ - ■■ D2
2 704	0.54	600	10 800	-	0.05	386688/143	✓	✓	✓						2KJ3524 - ■■■■■ - ■■ C2
2 301	0.63	600	10 800	-	0.07	149568/65	✓	✓	✓						2KJ3524 - ■■■■■ - ■■ B2
2 092	0.69	600	10 800	-	0.08	299136/143	✓	✓	✓						2KJ3524 - ■■■■■ - ■■ A2
1 824	0.79	600	10 800	-	0.10	1824/1	✓	✓	✓						2KJ3524 - ■■■■■ - ■■ W1
1 633	0.89	600	10 800	-	0.13	233472/143	✓	✓	✓						2KJ3524 - ■■■■■ - ■■ V1
1 450	1.0	600	10 800	-	0.15	18848/13	✓	✓	✓						2KJ3524 - ■■■■■ - ■■ U1
1 338	1.1	600	10 800	-	0.18	226176/169	✓	✓	✓						2KJ3524 - ■■■■■ - ■■ T1
1 163	1.2	600	10 800	-	0.21	105792/91	✓	✓	✓						2KJ3524 - ■■■■■ - ■■ S1
1 010	1.4	600	10 800	-	0.21	65664/65	✓	✓	✓						2KJ3524 - ■■■■■ - ■■ R1
912	1.6	600	10 800	-	0.27	912/1	✓	✓	✓						2KJ3524 - ■■■■■ - ■■ Q1
858	1.7	600	10 800	-	0.32	14592/17	✓	✓	✓						2KJ3524 - ■■■■■ - ■■ P1
748	1.9	600	10 800	-	0.37	9728/13	✓	✓	✓						2KJ3524 - ■■■■■ - ■■ N1
690	2.1	600	10 800	-	0.20	188480/273	✓	✓	✓						2KJ3524 - ■■■■■ - ■■ M1
600	2.4	600	10 800	-	0.23	88160/147	✓	✓	✓						2KJ3524 - ■■■■■ - ■■ L1
521	2.8	600	10 800	-	0.24	3648/7	✓	✓	✓						2KJ3524 - ■■■■■ - ■■ K1
470	3.1	600	10 800	-	0.31	9880/21	✓	✓	✓						2KJ3524 - ■■■■■ - ■■ J1
443	3.3	600	10 800	-	0.37	158080/357	✓	✓	✓						2KJ3524 - ■■■■■ - ■■ H1
419	3.5	600	10 800	-	0.38	147136/351	✓	✓	✓						2KJ3524 - ■■■■■ - ■■ G1
387	3.7	600	10 800	-	0.22	2850760/7371	✓	✓	✓						2KJ3524 - ■■■■■ - ■■ F1
335.96	4.3	600	10 800	-	0.25	1333420/3969	✓	✓	✓						2KJ3524 - ■■■■■ - ■■ E1
291.94	5.0	600	10 800	-	0.27	18392/63	✓	✓	✓						2KJ3524 - ■■■■■ - ■■ D1
263.55	5.5	600	10 800	-	0.35	149435/567	✓	✓	✓						2KJ3524 - ■■■■■ - ■■ C1
248.05	5.8	600	10 800	-	0.41	2390960/9639	✓	✓	✓						2KJ3524 - ■■■■■ - ■■ B1
216.25	6.7	600	10 800	-	0.48	367840/1701	✓	✓	✓						2KJ3524 - ■■■■■ - ■■ A1

[1] Only in conjunction with reduced-backlash version

© Siemens AG 2017

Selection and ordering data (continued)

i	n_2	T_{2N}	F_{R2}	φ [1]	J_G	R_{ex}	Motor frame size								Article No.
-	rpm	Nm	N	'	10^{-4} kgm²	-	63	71	80	90	100	112	132	160	
K.79-D19															
9 522	0.15	820	13 900	-	0.13	1485365/156	✓	✓							**2KJ3527 - ■■■■■ - ■■ G1**
8 789	0.16	820	13 900	-	0.16	1485365/169	✓	✓							**2KJ3527 - ■■■■■ - ■■ F1**
7 635	0.19	820	13 900	-	0.17	198505/26	✓	✓							**2KJ3527 - ■■■■■ - ■■ E1**
6 634	0.22	820	13 900	-	0.18	86247/13	✓	✓							**2KJ3527 - ■■■■■ - ■■ D1**
5 989	0.24	820	13 900	-	0.22	47915/8	✓	✓							**2KJ3527 - ■■■■■ - ■■ C1**
5 637	0.26	820	13 900	-	0.26	95830/17	✓	✓							**2KJ3527 - ■■■■■ - ■■ B1**
4 914	0.30	820	13 900	-	0.29	191660/39	✓	✓							**2KJ3527 - ■■■■■ - ■■ A1**
K.79-Z19															
4 804	0.30	820	13 900	-	0.02	562030/117	✓	✓	✓						**2KJ3526 - ■■■■■ - ■■ F2**
4 254	0.34	820	13 900	-	0.03	110593/26	✓	✓	✓						**2KJ3526 - ■■■■■ - ■■ E2**
3 696	0.39	820	13 900	-	0.04	96089/26	✓	✓	✓						**2KJ3526 - ■■■■■ - ■■ D2**
3 360	0.43	820	13 900	-	0.05	480445/143	✓	✓	✓						**2KJ3526 - ■■■■■ - ■■ C2**
2 859	0.51	820	13 900	-	0.07	74333/26	✓	✓	✓						**2KJ3526 - ■■■■■ - ■■ B2**
2 599	0.56	820	13 900	-	0.08	371665/143	✓	✓	✓						**2KJ3526 - ■■■■■ - ■■ A2**
2 266	0.64	820	13 900	-	0.10	9065/4	✓	✓	✓						**2KJ3526 - ■■■■■ - ■■ W1**
2 029	0.71	820	13 900	-	0.13	290080/143	✓	✓	✓						**2KJ3526 - ■■■■■ - ■■ V1**
1 801	0.81	820	13 900	-	0.15	281015/156	✓	✓	✓						**2KJ3526 - ■■■■■ - ■■ U1**
1 663	0.87	820	13 900	-	0.18	281015/169	✓	✓	✓						**2KJ3526 - ■■■■■ - ■■ T1**
1 444	1.0	820	13 900	-	0.21	37555/26	✓	✓	✓						**2KJ3526 - ■■■■■ - ■■ S1**
1 255	1.2	820	13 900	-	0.21	16317/13	✓	✓	✓						**2KJ3526 - ■■■■■ - ■■ R1**
1 133	1.3	820	13 900	-	0.27	9065/8	✓	✓	✓						**2KJ3526 - ■■■■■ - ■■ Q1**
1 066	1.4	820	13 900	-	0.32	18130/17	✓	✓	✓						**2KJ3526 - ■■■■■ - ■■ P1**
930	1.6	820	13 900	-	0.37	36260/39	✓	✓	✓						**2KJ3526 - ■■■■■ - ■■ N1**
858	1.7	820	13 900	-	0.20	200725/234	✓	✓	✓						**2KJ3526 - ■■■■■ - ■■ M1**
745	1.9	820	13 900	-	0.23	26825/36	✓	✓	✓						**2KJ3526 - ■■■■■ - ■■ L1**
648	2.2	820	13 900	-	0.24	1295/2	✓	✓	✓						**2KJ3526 - ■■■■■ - ■■ K1**
585	2.5	820	13 900	-	0.31	84175/144	✓	✓	✓						**2KJ3526 - ■■■■■ - ■■ J1**
550	2.6	820	13 900	-	0.37	84175/153	✓	✓	✓						**2KJ3526 - ■■■■■ - ■■ H1**
521	2.8	820	13 900	-	0.38	1096865/2106	✓	✓	✓						**2KJ3526 - ■■■■■ - ■■ G1**
481	3.0	820	13 900	-	0.22	24287725/50544	✓	✓	✓						**2KJ3526 - ■■■■■ - ■■ F1**
417	3.5	820	13 900	-	0.25	3245825/7776	✓	✓	✓						**2KJ3526 - ■■■■■ - ■■ E1**
363	4.0	820	13 900	-	0.27	156695/432	✓	✓	✓						**2KJ3526 - ■■■■■ - ■■ D1**
327.46	4.4	820	13 900	-	0.35	10185175/31104	✓	✓	✓						**2KJ3526 - ■■■■■ - ■■ C1**
308.19	4.7	820	13 900	-	0.41	10185175/33048	✓	✓	✓						**2KJ3526 - ■■■■■ - ■■ B1**
268.68	5.4	820	13 900	-	0.48	783475/2916	✓	✓	✓						**2KJ3526 - ■■■■■ - ■■ A1**

[1] Only in conjunction with reduced-backlash version

© Siemens AG 2017

Selection and ordering data (continued)

i	n_2	T_{2N}	F_{R2}	φ [1]	J_G	R_{ex}	Motor frame size								Article No.
-	rpm	Nm	N	'	10^{-4} kgm²	-	63	71	80	90	100	112	132	160	
K.89-D39															
9 761	0.15	1 600	18 100	-	0.17	1577036825/161568	✓	✓	✓	✓	✓	✓			**2KJ3530 - ■■■■■ - ■■ E1**
9 010	0.16	1 600	18 100	-	0.21	121310525/13464	✓	✓	✓	✓	✓	✓			**2KJ3530 - ■■■■■ - ■■ D1**
7 888	0.18	1 600	18 100	-	0.25	6436885/816	✓	✓	✓	✓	✓	✓			**2KJ3530 - ■■■■■ - ■■ C1**
6 916	0.21	1 600	18 100	-	0.23	279360809/40392	✓	✓	✓	✓	✓	✓			**2KJ3530 - ■■■■■ - ■■ B1**
6 275	0.23	1 600	18 100	-	0.33	225290975/35904	✓	✓	✓	✓	✓	✓			**2KJ3530 - ■■■■■ - ■■ A1**
K.89-Z39															
6 101	0.24	1 600	18 100	-	0.06	86972795/14256	✓	✓							**2KJ3528 - ■■■■■ - ■■ F2**
5 425	0.27	1 600	18 100	-	0.07	8592493/1584	✓	✓	✓	✓					**2KJ3528 - ■■■■■ - ■■ E2**
4 763	0.30	1 600	18 100	-	0.08	209573/44	✓	✓	✓	✓					**2KJ3528 - ■■■■■ - ■■ D2**
4 330	0.33	1 600	18 100	-	0.10	1047865/242	✓	✓	✓	✓					**2KJ3528 - ■■■■■ - ■■ C2**
3 705	0.39	1 600	18 100	-	0.12	1467011/396	✓	✓	✓	✓					**2KJ3528 - ■■■■■ - ■■ B2**
3 368	0.43	1 600	18 100	-	0.14	7335055/2178	✓	✓	✓	✓					**2KJ3528 - ■■■■■ - ■■ A2**
2 977	0.49	1 600	18 100	-	0.17	1047865/352	✓	✓	✓	✓	✓	✓			**2KJ3528 - ■■■■■ - ■■ W1**
2 706	0.54	1 600	18 100	-	0.22	5239325/1936	✓	✓	✓	✓	✓	✓			**2KJ3528 - ■■■■■ - ■■ V1**
2 370	0.61	1 600	18 100	-	0.26	45058195/19008	✓	✓	✓	✓	✓	✓			**2KJ3528 - ■■■■■ - ■■ U1**
2 188	0.66	1 600	18 100	-	0.31	3466015/1584	✓	✓	✓	✓	✓	✓			**2KJ3528 - ■■■■■ - ■■ T1**
1 937	0.75	1 600	18 100	-	0.36	6137495/3168	✓	✓	✓	✓	✓	✓			**2KJ3528 - ■■■■■ - ■■ S1**
1 612	0.90	1 600	18 100	-	0.48	13622245/8448	✓	✓	✓	✓	✓	✓			**2KJ3528 - ■■■■■ - ■■ R1**
1 518	0.96	1 600	18 100	-	0.56	13622245/8976	✓	✓	✓	✓	✓	✓			**2KJ3528 - ■■■■■ - ■■ Q1**
1 360	1.1	1 600	18 100	-	0.61	38771005/28512	✓	✓	✓	✓	✓	✓			**2KJ3528 - ■■■■■ - ■■ P1**
1 158	1.3	1 600	18 100	-	0.79	7335055/6336	✓	✓	✓	✓	✓	✓			**2KJ3528 - ■■■■■ - ■■ N1**
992	1.5	1 600	18 100	-	1.04	1047865/1056	✓	✓	✓	✓	✓	✓			**2KJ3528 - ■■■■■ - ■■ M1**
854	1.7	1 600	18 100	-	1.32	32483815/38016	✓	✓	✓	✓	✓	✓			**2KJ3528 - ■■■■■ - ■■ L1**
705	2.1	1 600	18 100	-	0.61	45656975/64768	✓	✓	✓	✓	✓	✓			**2KJ3528 - ■■■■■ - ■■ K1**
663	2.2	1 600	18 100	-	0.70	45656975/68816	✓	✓	✓	✓	✓	✓			**2KJ3528 - ■■■■■ - ■■ J1**
594	2.4	1 600	18 100	-	0.79	129946775/218592	✓	✓	✓	✓	✓	✓			**2KJ3528 - ■■■■■ - ■■ H1**
506	2.9	1 600	18 100	-	1.04	24584525/48576	✓	✓	✓	✓	✓	✓			**2KJ3528 - ■■■■■ - ■■ G1**
476	3.0	1 600	18 100	-	0.65	84791525/178112	✓	✓	✓	✓	✓	✓			**2KJ3528 - ■■■■■ - ■■ F1**
448	3.2	1 600	18 100	-	0.75	84791525/189244	✓	✓	✓	✓	✓	✓			**2KJ3528 - ■■■■■ - ■■ E1**
401	3.6	1 600	18 100	-	0.85	241329725/601128	✓	✓	✓	✓	✓	✓			**2KJ3528 - ■■■■■ - ■■ D1**
341.78	4.2	1 600	18 100	-	1.12	45656975/133584	✓	✓	✓	✓	✓	✓			**2KJ3528 - ■■■■■ - ■■ C1**
292.96	4.9	1 600	18 100	-	1.48	6522425/22264			✓	✓	✓	✓			**2KJ3528 - ■■■■■ - ■■ B1**
252.27	5.7	1 600	18 100	-	1.92	202195175/801504			✓	✓	✓	✓			**2KJ3528 - ■■■■■ - ■■ A1**

[1] Only in conjunction with reduced-backlash version

© Siemens AG 2017

Selection and ordering data (continued)

i	n_2	T_{2N}	F_{R2}	φ [1]	J_G	R_{ex}	Motor frame size								Article No.
-	rpm	Nm	N	'	10^{-4} kgm²	-	63	71	80	90	100	112	132	160	
K.109-D39															
13 352	0.11	2 900	24 500	-	0.12	57881096/4335	✓	✓	✓	✓	✓	✓			**2KJ3532 - ■■■■■ - ■■ G1**
11 918	0.12	2 900	24 500	-	0.15	2083719456/174845	✓	✓	✓	✓	✓	✓			**2KJ3532 - ■■■■■ - ■■ F1**
10 621	0.14	2 900	24 500	-	0.17	101291918/9537	✓	✓	✓	✓	✓	✓			**2KJ3532 - ■■■■■ - ■■ E1**
9 804	0.15	2 900	24 500	-	0.21	31166744/3179	✓	✓	✓	✓	✓	✓			**2KJ3532 - ■■■■■ - ■■ D1**
8 583	0.17	2 900	24 500	-	0.25	12403092/1445	✓	✓	✓	✓	✓	✓			**2KJ3532 - ■■■■■ - ■■ C1**
7 526	0.19	2 900	24 500	-	0.23	1794313976/238425	✓	✓	✓	✓	✓	✓			**2KJ3532 - ■■■■■ - ■■ B1**
6 828	0.21	2 900	24 500	-	0.33	21705411/3179	✓	✓	✓	✓	✓	✓			**2KJ3532 - ■■■■■ - ■■ A1**
K.109-Z39															
6 638	0.22	2 900	24 500	-	0.06	55861988/8415	✓	✓							**2KJ3531 - ■■■■■ - ■■ F2**
5 903	0.25	2 900	24 500	-	0.07	27594476/4675	✓	✓	✓	✓					**2KJ3531 - ■■■■■ - ■■ F2**
5 183	0.28	2 900	24 500	-	0.08	24229296/4675	✓	✓	✓	✓					**2KJ3531 - ■■■■■ - ■■ E2**
4 712	0.31	2 900	24 500	-	0.10	48458592/10285	✓	✓	✓	✓					**2KJ3531 - ■■■■■ - ■■ D2**
4 031	0.36	2 900	24 500	-	0.12	18845008/4675	✓	✓	✓	✓					**2KJ3531 - ■■■■■ - ■■ C2**
3 665	0.40	2 900	24 500	-	0.14	37690016/10285	✓	✓	✓	✓					**2KJ3531 - ■■■■■ - ■■ B2**
3 239	0.45	2 900	24 500	-	0.17	3028662/935	✓	✓	✓	✓	✓	✓			**2KJ3531 - ■■■■■ - ■■ A2**
2 945	0.49	2 900	24 500	-	0.23	6057324/2057	✓	✓	✓	✓	✓	✓			**2KJ3531 - ■■■■■ - ■■ W1**
2 579	0.56	2 900	24 500	-	0.26	7235137/2805	✓	✓	✓	✓	✓	✓			**2KJ3531 - ■■■■■ - ■■ V1**
2 381	0.61	2 900	24 500	-	0.31	2226196/935	✓	✓	✓	✓	✓	✓			**2KJ3531 - ■■■■■ - ■■ U1**
2 108	0.69	2 900	24 500	-	0.36	1971034/935	✓	✓	✓	✓	✓	✓			**2KJ3531 - ■■■■■ - ■■ T1**
1 755	0.83	2 900	24 500	-	0.48	6562101/3740	✓	✓	✓	✓	✓	✓			**2KJ3531 - ■■■■■ - ■■ S1**
1 651	0.88	2 900	24 500	-	0.57	26248404/15895	✓	✓	✓	✓	✓	✓			**2KJ3531 - ■■■■■ - ■■ R1**
1 480	0.98	2 900	24 500	-	0.62	12451166/8415	✓	✓	✓	✓	✓	✓			**2KJ3531 - ■■■■■ - ■■ Q1**
1 260	1.2	2 900	24 500	-	0.80	1177813/935	✓	✓	✓	✓	✓	✓			**2KJ3531 - ■■■■■ - ■■ P1**
1 080	1.3	2 900	24 500	-	1.05	1009554/935			✓	✓	✓	✓			**2KJ3531 - ■■■■■ - ■■ N1**
930	1.6	2 900	24 500	-	1.34	5216029/5610			✓	✓	✓	✓			**2KJ3531 - ■■■■■ - ■■ M1**
767	1.9	2 900	24 500	-	0.63	13196313/17204	✓	✓	✓	✓	✓	✓			**2KJ3531 - ■■■■■ - ■■ L1**
722	2.0	2 900	24 500	-	0.73	52785252/73117	✓	✓	✓	✓	✓	✓			**2KJ3531 - ■■■■■ - ■■ K1**
647	2.2	2 900	24 500	-	0.83	8346386/12903	✓	✓	✓	✓	✓	✓			**2KJ3531 - ■■■■■ - ■■ J1**
551	2.6	2 900	24 500	-	1.09	2368569/4301	✓	✓	✓	✓	✓	✓			**2KJ3531 - ■■■■■ - ■■ H1**
519	2.8	2 900	24 500	-	1.40	88672493/170775			✓	✓	✓	✓			**2KJ3531 - ■■■■■ - ■■ G1**
428	3.4	2 900	24 500	-	0.73	24926369/58190	✓	✓	✓	✓	✓	✓			**2KJ3531 - ■■■■■ - ■■ F1**
403	3.6	2 900	24 500	-	0.84	11730056/29095	✓	✓	✓	✓	✓	✓			**2KJ3531 - ■■■■■ - ■■ E1**
361	4.0	2 900	24 500	-	0.97	283777124/785565	✓	✓	✓	✓	✓	✓			**2KJ3531 - ■■■■■ - ■■ D1**
307.54	4.7	2 900	24 500	-	1.28	26843782/87285	✓	✓	✓	✓	✓	✓			**2KJ3531 - ■■■■■ - ■■ C1**
263.61	5.5	2 900	24 500	-	1.70	7669652/29095			✓	✓	✓	✓			**2KJ3531 - ■■■■■ - ■■ B1**
227	6.4	2 900	24 500	-	2.20	59439803/261855			✓	✓	✓	✓			**2KJ3531 - ■■■■■ - ■■ A1**

[1] Only in conjunction with reduced-backlash version

© Siemens AG 2017

Selection and ordering data (continued)

i	n_2	T_{2N}	F_{R2}	φ [1]	J_G	R_{ex}	Motor frame size								Article No.
-	rpm	Nm	N	'	10^{-4} kgm²	-	63	71	80	90	100	112	132	160	
K.129-D39															
14 490	0.10	4 400	40 000	-	0.09	2494142287/172125	✓	✓	✓	✓					**2KJ3534 - ■■■■■ - ■■ H1**
13 173	0.11	4 400	40 000	-	0.10	4988284574/378675	✓	✓	✓	✓					**2KJ3534 - ■■■■■ - ■■ G1**
11 550	0.13	4 400	40 000	-	0.12	1192850659/103275	✓	✓	✓	✓	✓	✓			**2KJ3534 - ■■■■■ - ■■ F1**
10 309	0.14	4 400	40 000	-	0.15	433763876/42075	✓	✓	✓	✓	✓	✓			**2KJ3534 - ■■■■■ - ■■ E1**
9 188	0.16	4 400	40 000	-	0.18	759086783/82620	✓	✓	✓	✓	✓	✓			**2KJ3534 - ■■■■■ - ■■ D1**
8 481	0.17	4 400	40 000	-	0.21	58391291/6885	✓	✓	✓	✓	✓	✓			**2KJ3534 - ■■■■■ - ■■ C1**
7 425	0.20	4 400	40 000	-	0.25	170407237/22950	✓	✓	✓	✓	✓	✓			**2KJ3534 - ■■■■■ - ■■ B1**
6 510	0.22	4 400	40 000	-	0.23	3361670039/516375	✓	✓	✓	✓	✓	✓			**2KJ3534 - ■■■■■ - ■■ A1**
K.129-Z39															
5 743	0.25	4 400	37 600	-	0.06	209316289/36450	✓	✓							**2KJ3533 - ■■■■■ - ■■ A2**
5 106	0.28	4 400	37 600	-	0.07	103397203/20250	✓	✓	✓	✓					**2KJ3533 - ■■■■■ - ■■ X1**
4 483	0.32	4 400	37 600	-	0.09	5043766/1125	✓	✓	✓	✓					**2KJ3533 - ■■■■■ - ■■ W1**
4 076	0.36	4 400	37 600	-	0.11	10087532/2475	✓	✓	✓	✓					**2KJ3533 - ■■■■■ - ■■ V1**
3 487	0.42	4 400	37 600	-	0.13	35306362/10125	✓	✓	✓	✓					**2KJ3533 - ■■■■■ - ■■ U1**
3 170	0.46	4 400	37 600	-	0.15	70612724/22275	✓	✓	✓	✓					**2KJ3533 - ■■■■■ - ■■ T1**
2 802	0.52	4 400	37 600	-	0.18	2521883/900	✓	✓	✓	✓	✓	✓			**2KJ3533 - ■■■■■ - ■■ S1**
2 547	0.57	4 400	37 600	-	0.24	2521883/990	✓	✓	✓	✓	✓	✓			**2KJ3533 - ■■■■■ - ■■ R1**
2 231	0.65	4 400	37 600	-	0.28	108440969/48600	✓	✓	✓	✓	✓	✓			**2KJ3533 - ■■■■■ - ■■ Q1**
2 060	0.70	4 400	37 600	-	0.33	8341613/4050	✓	✓	✓	✓	✓	✓			**2KJ3533 - ■■■■■ - ■■ P1**
1 824	0.79	4 400	37 600	-	0.39	14771029/8100	✓	✓	✓	✓	✓	✓			**2KJ3533 - ■■■■■ - ■■ N1**
1 518	0.96	4 400	37 600	-	0.53	32784479/21600	✓	✓	✓	✓	✓	✓			**2KJ3533 - ■■■■■ - ■■ M1**
1 429	1.0	4 400	37 600	-	0.61	32784479/22950	✓	✓	✓	✓	✓	✓			**2KJ3533 - ■■■■■ - ■■ L1**
1 280	1.1	4 400	37 600	-	0.68	93309671/72900	✓	✓	✓	✓	✓	✓			**2KJ3533 - ■■■■■ - ■■ K1**
1 090	1.3	4 400	37 600	-	0.88	17653181/16200	✓	✓	✓	✓	✓	✓			**2KJ3533 - ■■■■■ - ■■ J1**
934	1.6	4 400	37 600	-	1.16	2521883/2700			✓	✓	✓	✓			**2KJ3533 - ■■■■■ - ■■ H1**
804	1.8	4 400	37 600	-	1.48	78178373/97200			✓	✓	✓	✓			**2KJ3533 - ■■■■■ - ■■ G1**
664	2.2	4 400	37 600	-	0.85	21976409/33120	✓	✓	✓	✓	✓	✓			**2KJ3533 - ■■■■■ - ■■ F1**
625	2.3	4 400	37 600	-	0.98	21976409/35190	✓	✓	✓	✓	✓	✓			**2KJ3533 - ■■■■■ - ■■ E1**
560	2.6	4 400	37 600	-	1.13	62548241/111780	✓	✓	✓	✓	✓	✓			**2KJ3533 - ■■■■■ - ■■ D1**
476	3.0	4 400	37 600	-	1.51	11833451/24840	✓	✓	✓	✓	✓	✓			**2KJ3533 - ■■■■■ - ■■ C1**
408	3.6	4 400	37 600	-	2.00	1690493/4140			✓	✓	✓	✓			**2KJ3533 - ■■■■■ - ■■ B1**
352	4.1	4 400	37 600	-	2.60	52405283/149040			✓	✓	✓	✓			**2KJ3533 - ■■■■■ - ■■ A1**

[1] Only in conjunction with reduced-backlash version

© Siemens AG 2017

Selection and ordering data (continued)

i	n_2	T_{2N}	F_{R2}	φ [1]	J_G	R_{ex}	Motor frame size								Article No.
-	rpm	Nm	N	'	10^{-4} kgm²	-	63	71	80	90	100	112	132	160	
K.149-D49															
13 575	0.11	8 000	65 000	-	0.12	23891273/1760	✓	✓	✓	✓					2KJ3536 - ■■■■■ - ■■ L1
12 341	0.12	8 000	65 000	-	0.14	23891273/1936	✓	✓	✓	✓					2KJ3536 - ■■■■■ - ■■ K1
10 908	0.13	8 000	65 000	-	0.17	30717351/2816	✓	✓	✓	✓	✓	✓			2KJ3536 - ■■■■■ - ■■ J1
9 917	0.15	8 000	65 000	-	0.22	153586755/15488	✓	✓	✓	✓	✓	✓			2KJ3536 - ■■■■■ - ■■ H1
8 686	0.17	8 000	65 000	-	0.26	146760677/16896	✓	✓	✓	✓	✓	✓			2KJ3536 - ■■■■■ - ■■ G1
8 018	0.18	8 000	65 000	-	0.31	146760677/18304	✓	✓	✓	✓	✓	✓			2KJ3536 - ■■■■■ - ■■ F1
7 099	0.20	8 000	65 000	-	0.37	19990657/2816	✓	✓	✓	✓	✓	✓	✓		2KJ3536 - ■■■■■ - ■■ E1
5 909	0.25	8 000	65 000	-	0.50	133108521/22528	✓	✓	✓	✓	✓	✓	✓		2KJ3536 - ■■■■■ - ■■ D1
5 561	0.26	8 000	65 000	-	0.59	7829913/1408	✓	✓	✓	✓	✓	✓	✓		2KJ3536 - ■■■■■ - ■■ C1
4 983	0.29	8 000	65 000	-	0.66	126282443/25344	✓	✓	✓	✓	✓	✓	✓		2KJ3536 - ■■■■■ - ■■ B1
4 242	0.34	8 000	65 000	-	0.86	23891273/5632	✓	✓	✓	✓	✓	✓	✓		2KJ3536 - ■■■■■ - ■■ A1
K.149-Z49															
4 149	0.35	8 000	65 000	-	0.18	58423197/14080	✓	✓	✓	✓	✓	✓	✓		2KJ3535 - ■■■■■ - ■■ B2
3 772	0.38	8 000	65 000	-	0.22	58423197/15488	✓	✓	✓	✓	✓	✓	✓		2KJ3535 - ■■■■■ - ■■ A2
3 208	0.45	8 000	65 000	-	0.28	9034515/2816	✓	✓	✓	✓	✓	✓	✓		2KJ3535 - ■■■■■ - ■■ X1
2 917	0.5	8 000	65 000	-	0.34	45172575/15488	✓	✓	✓	✓	✓	✓	✓		2KJ3535 - ■■■■■ - ■■ W1
2 602	0.56	8 000	65 000	-	0.39	14655991/5632	✓	✓	✓	✓	✓	✓	✓		2KJ3535 - ■■■■■ - ■■ V1
2 333	0.62	8 000	65 000	-	0.47	9034515/3872	✓	✓	✓	✓	✓	✓	✓		2KJ3535 - ■■■■■ - ■■ U1
2 103	0.69	8 000	65 000	-	0.55	11845253/5632	✓	✓	✓	✓	✓	✓	✓		2KJ3535 - ■■■■■ - ■■ T1
1 941	0.75	8 000	65 000	-	0.66	35535759/18304	✓	✓	✓	✓	✓	✓	✓		2KJ3535 - ■■■■■ - ■■ S1
1 772	0.82	8 000	65 000	-	0.78	2495247/1408	✓	✓	✓	✓	✓	✓	✓		2KJ3535 - ■■■■■ - ■■ R1
1 470	0.99	8 000	65 000	-	1.00	3011505/2048	✓	✓	✓	✓	✓	✓	✓		2KJ3535 - ■■■■■ - ■■ Q1
1 384	1.0	8 000	65 000	-	1.16	3011505/2176	✓	✓	✓	✓	✓	✓	✓		2KJ3535 - ■■■■■ - ■■ P1
1 307	1.1	8 000	65 000	-	1.31	1003835/768	✓	✓	✓	✓	✓	✓	✓		2KJ3535 - ■■■■■ - ■■ N1
1 112	1.3	8 000	65 000	-	1.62	7829913/7040	✓	✓	✓	✓	✓	✓	✓		2KJ3535 - ■■■■■ - ■■ M1
953	1.5	8 000	65 000	-	2.00	29512749/30976	✓	✓	✓	✓	✓	✓	✓		2KJ3535 - ■■■■■ - ■■ L1
838	1.7	8 000	65 000	-	2.50	9436049/11264	✓	✓	✓	✓	✓	✓	✓		2KJ3535 - ■■■■■ - ■■ K1
707	2.1	8 000	65 000	-	3.20	497553/704	✓	✓	✓	✓	✓	✓	✓		2KJ3535 - ■■■■■ - ■■ J1
616	2.4	8 000	65 000	-	4.20	5420709/8800	✓	✓	✓	✓	✓	✓	✓		2KJ3535 - ■■■■■ - ■■ H1
608	2.4	8 000	65 000	-	1.81	826413/1360	✓	✓	✓	✓	✓	✓	✓		2KJ3535 - ■■■■■ - ■■ G1
574	2.5	8 000	65 000	-	2.00	275471/480	✓	✓	✓	✓	✓	✓	✓		2KJ3535 - ■■■■■ - ■■ F1
488	3.0	8 000	65 000	-	2.60	10743369/22000	✓	✓	✓	✓	✓	✓	✓		2KJ3535 - ■■■■■ - ■■ E1
418	3.5	8 000	65 000	-	3.40	40494237/96800	✓	✓	✓	✓	✓	✓	✓		2KJ3535 - ■■■■■ - ■■ D1
368	3.9	8 000	65 000	-	4.30	12947137/35200	✓	✓	✓	✓	✓	✓	✓		2KJ3535 - ■■■■■ - ■■ C1
310.31	4.7	8 000	65 000	-	5.70	682689/2200	✓	✓	✓	✓	✓	✓	✓		2KJ3535 - ■■■■■ - ■■ B1
270.46	5.4	8 000	65 000	-	7.50	7437717/27500	✓	✓	✓	✓	✓	✓	✓		2KJ3535 - ■■■■■ - ■■ A1

[1] Only in conjunction with reduced-backlash version

© Siemens AG 2017

Selection and ordering data (continued)

i	n_2	T_{2N}	F_{R2}	φ [1]	J_G	R_{ex}	Motor frame size								Article No.
-	rpm	Nm	N	'	10^{-4} kgm²	-	63	71	80	90	100	112	132	160	
K.169-D49															
14 931	0.10	13 000	70 000	-	0.22	315340973/21120	✓	✓	✓	✓	✓	✓			**2KJ3538 - ■■■■■ - ■■ H1**
13 078	0.11	13 000	70 000	-	0.26	13559661839/1036800	✓	✓	✓	✓	✓	✓			**2KJ3538 - ■■■■■ - ■■ G1**
12 072	0.12	13 000	70 000	-	0.31	13559661839/1123200	✓	✓	✓	✓	✓	✓			**2KJ3538 - ■■■■■ - ■■ F1**
10 689	0.14	13 000	70 000	-	0.38	12928979893/1209600	✓	✓	✓	✓	✓	✓	✓		**2KJ3538 - ■■■■■ - ■■ E1**
8 896	0.16	13 000	70 000	-	0.51	4099432649/460800	✓	✓	✓	✓	✓	✓	✓		**2KJ3538 - ■■■■■ - ■■ D1**
8 373	0.17	13 000	70 000	-	0.59	241143097/28800	✓	✓	✓	✓	✓	✓	✓		**2KJ3538 - ■■■■■ - ■■ C1**
7 502	0.19	13 000	70 000	-	0.66	11667616001/1555200	✓	✓	✓	✓	✓	✓	✓		**2KJ3538 - ■■■■■ - ■■ B1**
6 387	0.23	13 000	70 000	-	0.86	2207386811/345600	✓	✓	✓	✓	✓	✓	✓		**2KJ3538 - ■■■■■ - ■■ A1**
K.169-Z49															
6 248	0.23	13 000	70 000	-	0.19	1799298493/288000	✓	✓	✓	✓					**2KJ3537 - ■■■■■ - ■■ C2**
5 680	0.26	13 000	70 000	-	0.23	1799298493/316800	✓	✓	✓	✓					**2KJ3537 - ■■■■■ - ■■ B2**
4 831	0.30	13 000	70 000	-	0.28	18549469/3840	✓	✓	✓	✓					**2KJ3537 - ■■■■■ - ■■ A2**
4 391	0.33	13 000	70 000	-	0.34	18549469/4224	✓	✓	✓	✓					**2KJ3537 - ■■■■■ - ■■ X1**
3 918	0.37	13 000	70 000	-	0.40	1354111237/345600	✓	✓	✓	✓	✓	✓			**2KJ3537 - ■■■■■ - ■■ W1**
3 513	0.41	13 000	70 000	-	0.48	18549469/5280	✓	✓	✓	✓	✓	✓			**2KJ3537 - ■■■■■ - ■■ V1**
3 167	0.46	13 000	70 000	-	0.57	1094418671/345600	✓	✓	✓	✓	✓	✓			**2KJ3537 - ■■■■■ - ■■ U1**
2 923	0.50	13 000	70 000	-	0.67	1094418671/374400	✓	✓	✓	✓	✓	✓			**2KJ3537 - ■■■■■ - ■■ T1**
2 668	0.54	13 000	70 000	-	0.80	537934601/201600	✓	✓	✓	✓	✓	✓	✓		**2KJ3537 - ■■■■■ - ■■ S1**
2 214	0.65	13 000	70 000	-	1.03	204044159/92160	✓	✓	✓	✓	✓	✓	✓		**2KJ3537 - ■■■■■ - ■■ R1**
2 084	0.70	13 000	70 000	-	1.19	204044159/97920	✓	✓	✓	✓	✓	✓	✓		**2KJ3537 - ■■■■■ - ■■ Q1**
1 968	0.74	13 000	70 000	-	1.35	204044159/103680	✓	✓	✓	✓	✓	✓	✓		**2KJ3537 - ■■■■■ - ■■ P1**
1 675	0.87	13 000	70 000	-	1.67	241143097/144000	✓	✓	✓	✓	✓	✓	✓		**2KJ3537 - ■■■■■ - ■■ N1**
1 435	1.0	13 000	70 000	-	2.10	908923981/633600			✓	✓	✓	✓	✓		**2KJ3537 - ■■■■■ - ■■ M1**
1 261	1.1	13 000	70 000	-	2.60	871825043/691200			✓	✓	✓	✓	✓		**2KJ3537 - ■■■■■ - ■■ L1**
1 064	1.4	13 000	70 000	-	3.30	352439911/331200			✓	✓	✓	✓	✓		**2KJ3537 - ■■■■■ - ■■ K1**
927	1.6	13 000	70 000	-	4.40	18549469/20000			✓	✓	✓	✓	✓		**2KJ3537 - ■■■■■ - ■■ J1**
915	1.6	13 000	70 000	-	1.98	279967567/306000	✓	✓	✓	✓	✓	✓	✓		**2KJ3537 - ■■■■■ - ■■ H1**
864	1.7	13 000	70 000	-	2.20	279967567/324000	✓	✓	✓	✓	✓	✓	✓		**2KJ3537 - ■■■■■ - ■■ G1**
735	2.0	13 000	70 000	-	2.90	330870761/450000	✓	✓	✓	✓	✓	✓	✓		**2KJ3537 - ■■■■■ - ■■ F1**
630	2.3	13 000	70 000	-	3.80	1247128253/1980000			✓	✓	✓	✓	✓		**2KJ3537 - ■■■■■ - ■■ E1**
554	2.6	13 000	70 000	-	4.70	1196225059/2160000			✓	✓	✓	✓	✓		**2KJ3537 - ■■■■■ - ■■ D1**
467	3.1	13 000	70 000	-	6.30	483580343/1035000			✓	✓	✓	✓	✓		**2KJ3537 - ■■■■■ - ■■ C1**
416	3.5	13 000	70 000	-	6.90	25840171/62100			✓	✓	✓	✓	✓		**2KJ3537 - ■■■■■ - ■■ B1**
363	4.0	13 000	70 000	-	9.10	1360009/3750			✓	✓	✓	✓	✓		**2KJ3537 - ■■■■■ - ■■ A1**

[1] Only in conjunction with reduced-backlash version

© Siemens AG 2017

Selection and ordering data (continued)

i	n_2	T_{2N}	F_{R2}	φ [1]	J_G	R_{ex}	Motor frame size								Article No.
-	rpm	Nm	N	'	10^{-4} kgm²	-	63	71	80	90	100	112	132	160	
K.189-D69															
13 345	0.11	19 500	104 000	-	0.26	840736/63	✓	✓	✓	✓	✓	✓			**2KJ3541 - ■■■■■ - ■■ G1**
12 318	0.12	19 500	104 000	-	0.32	258688/21	✓	✓	✓	✓	✓	✓			**2KJ3541 - ■■■■■ - ■■ F1**
10 907	0.13	19 500	104 000	-	0.38	1603264/147	✓	✓	✓	✓	✓	✓	✓		**2KJ3541 - ■■■■■ - ■■ E1**
9 078	0.16	19 500	104 000	-	0.52	63544/7	✓	✓	✓	✓	✓	✓	✓		**2KJ3541 - ■■■■■ - ■■ D1**
8 544	0.17	19 500	104 000	-	0.61	1016704/119	✓	✓	✓	✓	✓	✓	✓		**2KJ3541 - ■■■■■ - ■■ C1**
7 655	0.19	19 500	104 000	-	0.67	1446848/189	✓	✓	✓	✓	✓	✓	✓		**2KJ3541 - ■■■■■ - ■■ B1**
6 517	0.22	19 500	104 000	-	0.89	19552/3	✓	✓	✓	✓	✓	✓	✓		**2KJ3541 - ■■■■■ - ■■ A1**
K.189-Z69															
6 375	0.23	19 500	104 000	-	0.21	3793088/595	✓	✓	✓	✓					**2KJ3540 - ■■■■■ - ■■ C2**
5 795	0.25	19 500	104 000	-	0.26	7586176/1309	✓	✓	✓	✓					**2KJ3540 - ■■■■■ - ■■ B2**
4 929	0.29	19 500	104 000	-	0.32	586560/119	✓	✓	✓	✓					**2KJ3540 - ■■■■■ - ■■ A2**
4 481	0.32	19 500	104 000	-	0.39	5865600/1309	✓	✓	✓	✓					**2KJ3540 - ■■■■■ - ■■ X1**
3 998	0.36	19 500	104 000	-	0.46	1427296/357	✓	✓	✓	✓	✓	✓			**2KJ3540 - ■■■■■ - ■■ W1**
3 585	0.40	19 500	104 000	-	0.56	4692480/1309	✓	✓	✓	✓	✓	✓			**2KJ3540 - ■■■■■ - ■■ V1**
3 231	0.45	19 500	104 000	-	0.66	1153568/357	✓	✓	✓	✓	✓	✓			**2KJ3540 - ■■■■■ - ■■ U1**
2 983	0.49	19 500	104 000	-	0.78	354944/119	✓	✓	✓	✓	✓	✓			**2KJ3540 - ■■■■■ - ■■ T1**
2 723	0.53	19 500	104 000	-	0.93	2268032/833	✓	✓	✓	✓	✓	✓	✓		**2KJ3540 - ■■■■■ - ■■ S1**
2 259	0.64	19 500	104 000	-	1.23	268840/119	✓	✓	✓	✓	✓	✓	✓		**2KJ3540 - ■■■■■ - ■■ R1**
2 126	0.68	19 500	104 000	-	1.41	4301440/2023	✓	✓	✓	✓	✓	✓	✓		**2KJ3540 - ■■■■■ - ■■ Q1**
2 008	0.72	19 500	104 000	-	1.59	2150720/1071	✓	✓	✓	✓	✓	✓	✓		**2KJ3540 - ■■■■■ - ■■ P1**
1 709	0.85	19 500	104 000	-	2.0	1016704/595	✓	✓	✓	✓	✓	✓	✓		**2KJ3540 - ■■■■■ - ■■ N1**
1 464	0.99	19 500	104 000	-	2.5	273728/187			✓	✓	✓	✓	✓		**2KJ3540 - ■■■■■ - ■■ M1**
1 287	1.1	19 500	104 000	-	3.2	459472/357			✓	✓	✓	✓	✓		**2KJ3540 - ■■■■■ - ■■ L1**
1 086	1.3	19 500	104 000	-	4.1	2971904/2737			✓	✓	✓	✓	✓		**2KJ3540 - ■■■■■ - ■■ K1**
946	1.5	19 500	104 000	-	5.5	2815488/2975			✓	✓	✓	✓	✓		**2KJ3540 - ■■■■■ - ■■ J1**
889	1.6	19 500	104 000	-	3.1	3128320/3519	✓	✓	✓	✓	✓	✓	✓		**2KJ3540 - ■■■■■ - ■■ H1**
756	1.9	19 500	104 000	-	4.0	16267264/21505	✓	✓	✓	✓	✓	✓	✓		**2KJ3540 - ■■■■■ - ■■ G1**
648	2.2	19 500	104 000	-	5.3	30657536/47311			✓	✓	✓	✓	✓		**2KJ3540 - ■■■■■ - ■■ F1**
570	2.5	19 500	104 000	-	6.7	7351552/12903			✓	✓	✓	✓	✓		**2KJ3540 - ■■■■■ - ■■ E1**
481	3.0	19 500	104 000	-	9.1	47550464/98923			✓	✓	✓	✓	✓		**2KJ3540 - ■■■■■ - ■■ D1**
419	3.5	19 500	104 000	-	12	45047808/107525			✓	✓	✓	✓	✓		**2KJ3540 - ■■■■■ - ■■ C1**
384	3.8	19 500	104 000	-	11	37948928/98923			✓	✓	✓	✓	✓		**2KJ3540 - ■■■■■ - ■■ B1**
334.36	4.3	19 500	104 000	-	14	35951616/107525			✓	✓	✓	✓	✓		**2KJ3540 - ■■■■■ - ■■ A1**

[1] Only in conjunction with reduced-backlash version

© Siemens AG 2017

Dimensional drawing overview

Information about dimensional drawings can be found in chapter Introduction on page 1/21.

Design	Size	Dimensional drawing on page
Foot-mounted design		
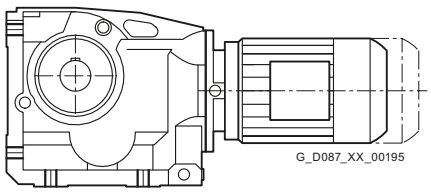 G_D087_XX_00195	B..19	5/75
	B..29	5/79
	B..39	5/83
	B..49	5/87
	K..39	5/91
	K..49	5/95
	K..69	5/99
	K..79	5/103
	K..89	5/107
	K..109	5/111
	K..129	5/115
	K..149	5/119
	K..169	5/123
	K..189	5/127
Flange-mounted design		
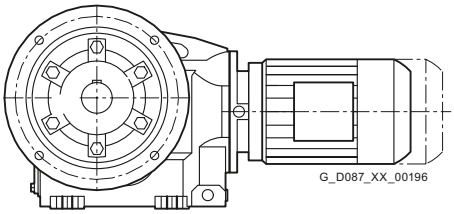 G_D087_XX_00196	B.F.19	5/76
	B.F.29	5/80
	B.F.39	5/84
	B.F.49	5/88
	K.F.39	5/92
	K.F.49	5/96
	K.F.69	5/100
	K.F.79	5/104
	K.F.89	5/108
	K.F.109	5/112
	K.F.129	5/116
	K.F.149	5/120
	K.F.169	5/124
	K.F.189	5/128
Housing flange design		
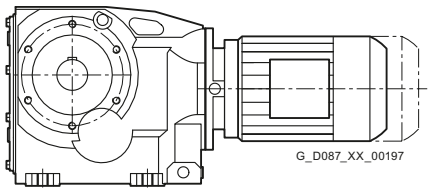 G_D087_XX_00197	B.Z.19	5/77
	B.Z.29	5/81
	B.Z.39	5/85
	B.Z.49	5/89
	K.Z.39	5/93
	K.Z.49	5/97
	K.Z.69	5/101
	K.Z.79	5/105
	K.Z.89	5/109
	K.Z.109	5/113
	K.Z.129	5/117
	K.Z.149	5/121
	K.Z.169	5/125
	K.Z.189	5/129
Shaft-mounted design		
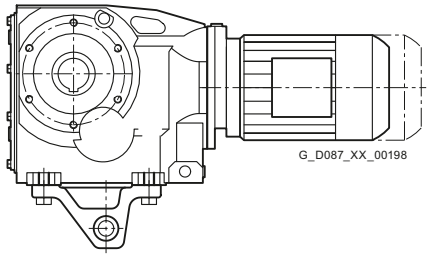 G_D087_XX_00198	BAD.19	5/78
	BAD.29	5/82
	BAD.39	5/86
	BAD.49	5/90
	KAD.39	5/94
	KAD.49	5/98
	KAD.69	5/102
	KAD.79	5/106
	KAD.89	5/110
	KAD.109	5/114
	KAD.129	5/118
	KAD.149	5/122
	KAD.169	5/126
	KAD.189	5/130

© Siemens AG 2017

Dimensional drawing overview (continued)

Design	Size	Dimensional drawing on page
Bevel tandem geared motors		
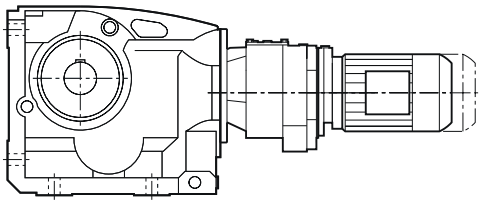	K.39-D/Z19 ... K.189-D/Z69	5/131
Additional versions and options		
SIMOLOC assembly system		
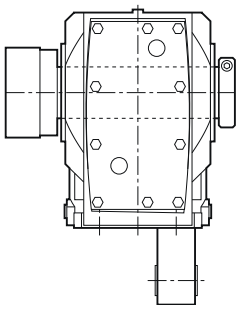	BADR29 ... BADR49 KADR39 ... BADR89	5/132 ... 5/133
Protection covers		
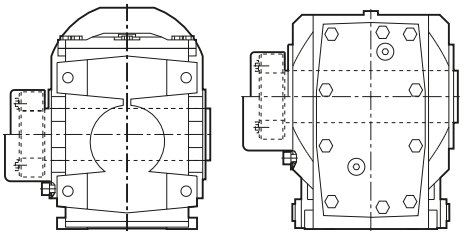	BA.19 ... KA.189	5/134 ... 5/135
Inner contour of the flange design		
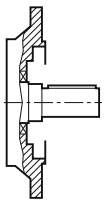	BF19 ... KF189 BAF19 ... KAF189	5/136
Pin holes		
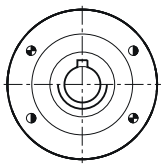	K.Z.109 and K.Z.129	5/137

© Siemens AG 2017

B..19 gearbox in a foot-mounted design

B030, BA030

B19

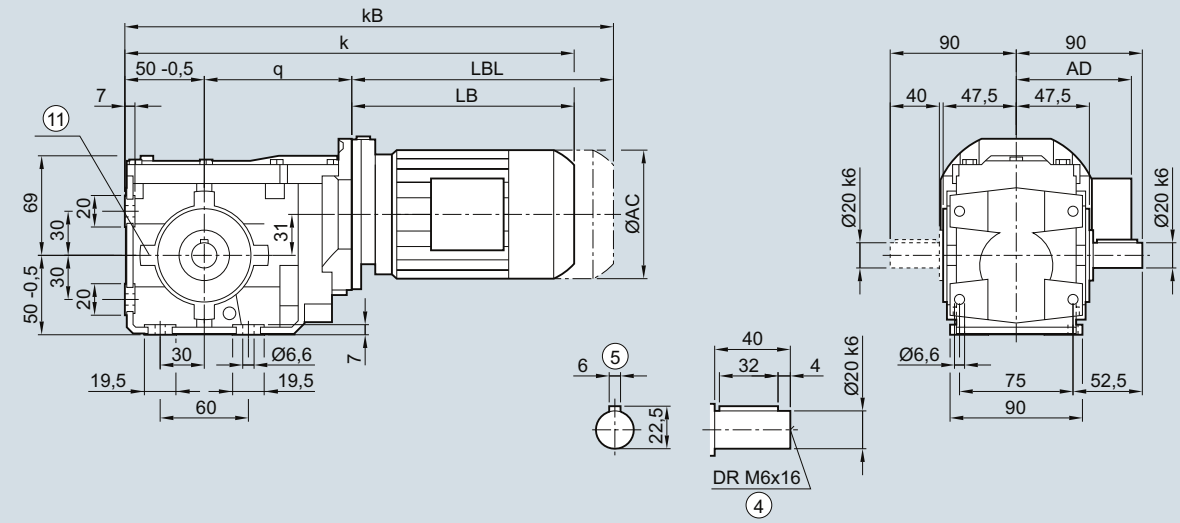

BA19

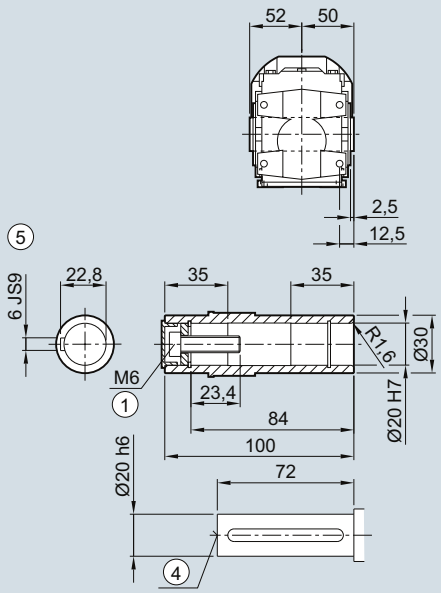

Motor	LA 63	71	71Z	LE 80	80Z
q	133.0	141.0	141.0	149.5	149.5
AC	117.8	138.8	138.8	156.3	156.3
AD[1)]	124.0	134.0	134.0	149.2	149.2
k	343.5	375.5	394.5	439.5	474.5
kB	388.0	430.5	449.5	499.5	534.5
LB	160.5	184.5	203.5	240.0	275.0
LBL	205.0	239.5	258.5	300.0	335.0

① ISO 4014
④ DIN 332
⑤ Feather key/keyway DIN 6885-1
⑪ Use bores only for housing flange design
1) AD depends on the motor options, for other dimensions see page 8/36.

© Siemens AG 2017

B.F.19 gearbox in a flange-mounted design

BF030, BAF030

BF19

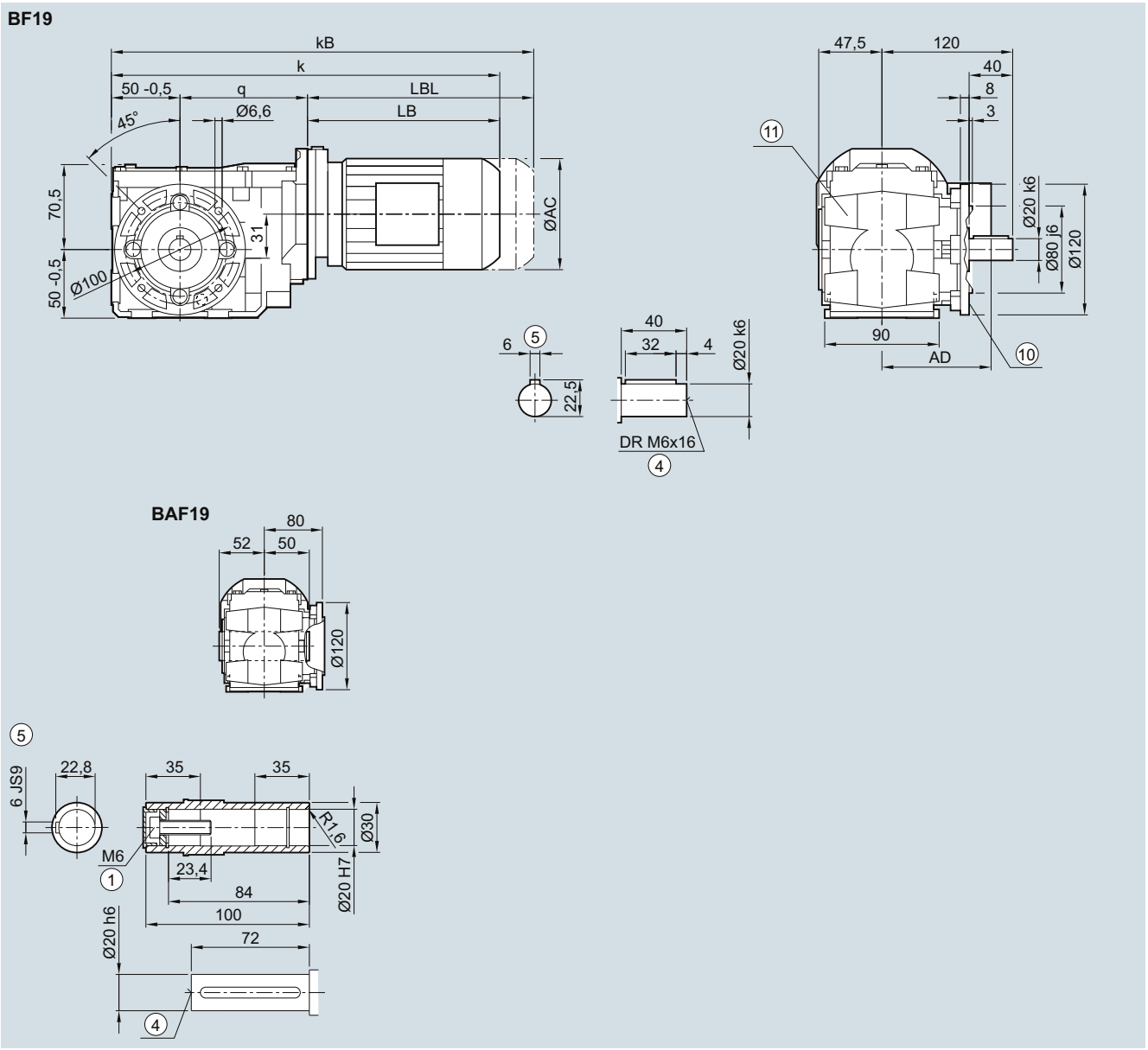

Motor	LA 63	71	71Z	LE 80	80Z
q	133.0	141.0	141.0	149.5	149.5
AC	117.8	138.8	138.8	156.3	156.3
AD[1)]	124.0	134.0	134.0	149.2	149.2
k	343.5	375.5	394.5	439.5	474.5
kB	388.0	430.5	449.5	499.5	534.5
LB	160.5	184.5	203.5	240.0	275.0
LBL	205.0	239.5	258.5	300.0	335.0

① ISO 4014 ④ DIN 332 ⑤ Feather key/keyway DIN 6885-1 ⑩ For inner contour see page 5/136
1) AD depends on the motor options, for other dimensions see page 8/36. ⑪ Use bores only for foot-mounted design

© Siemens AG 2017

B.Z.19 gearbox in a housing flange design

BZ030, BAZ030

BZ19

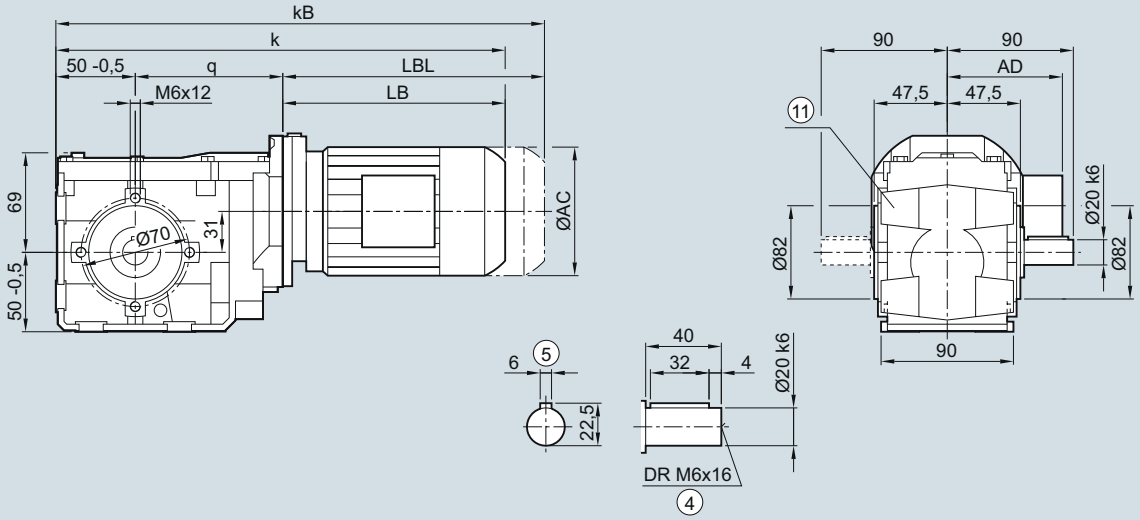

BAZ19

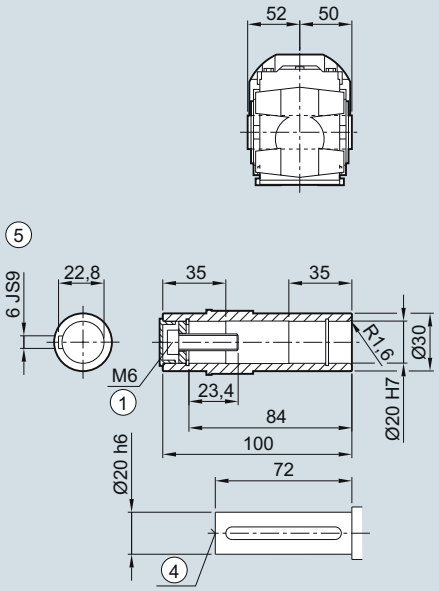

Motor	LA			LE	
	63	71	71Z	80	80Z
q	133.0	141.0	141.0	149.5	149.5
AC	117.8	138.8	138.8	156.3	156.3
AD[1)]	124.0	134.0	134.0	149.2	149.2
k	343.5	375.5	394.5	439.5	474.5
kB	388.0	430.5	449.5	499.5	534.5
LB	160.5	184.5	203.5	240.0	275.0
LBL	205.0	239.5	258.5	300.0	335.0

① ISO 4014
④ DIN 332
⑤ Feather key/keyway DIN 6885-1
⑪ Use bores only for foot-mounted design
1) AD depends on the motor options, for other dimensions see page 8/36.

© Siemens AG 2017

BAD.19 gearbox in a shaft-mounted design

BAD030

BAD19

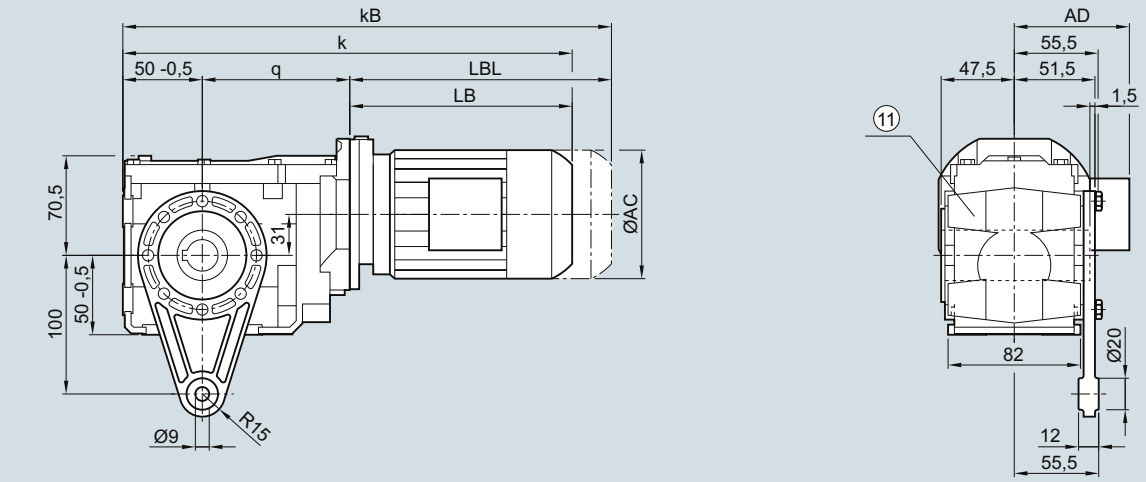

BAD19

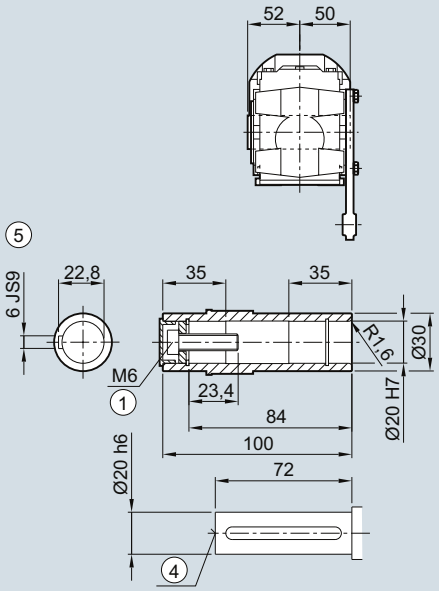

Motor	LA 63	71	71Z	LE 80	80Z
q	133.0	141.0	141.0	149.5	149.5
AC	117.8	138.8	138.8	156.3	156.3
AD[1)]	124.0	134.0	134.0	149.2	149.2
k	343.5	375.5	394.5	439.5	474.5
kB	388.0	430.5	449.5	499.5	534.5
LB	160.5	184.5	203.5	240.0	275.0
LBL	205.0	239.5	258.5	300.0	335.0

① ISO 4014
④ DIN 332
⑤ Feather key/keyway DIN 6885-1
1) AD depends on the motor options, for other dimensions see page 8/36.
⑪ Use bores only for foot-mounted design

© Siemens AG 2017

B..29 gearbox in a foot-mounted design

B030, BA030, BAS030

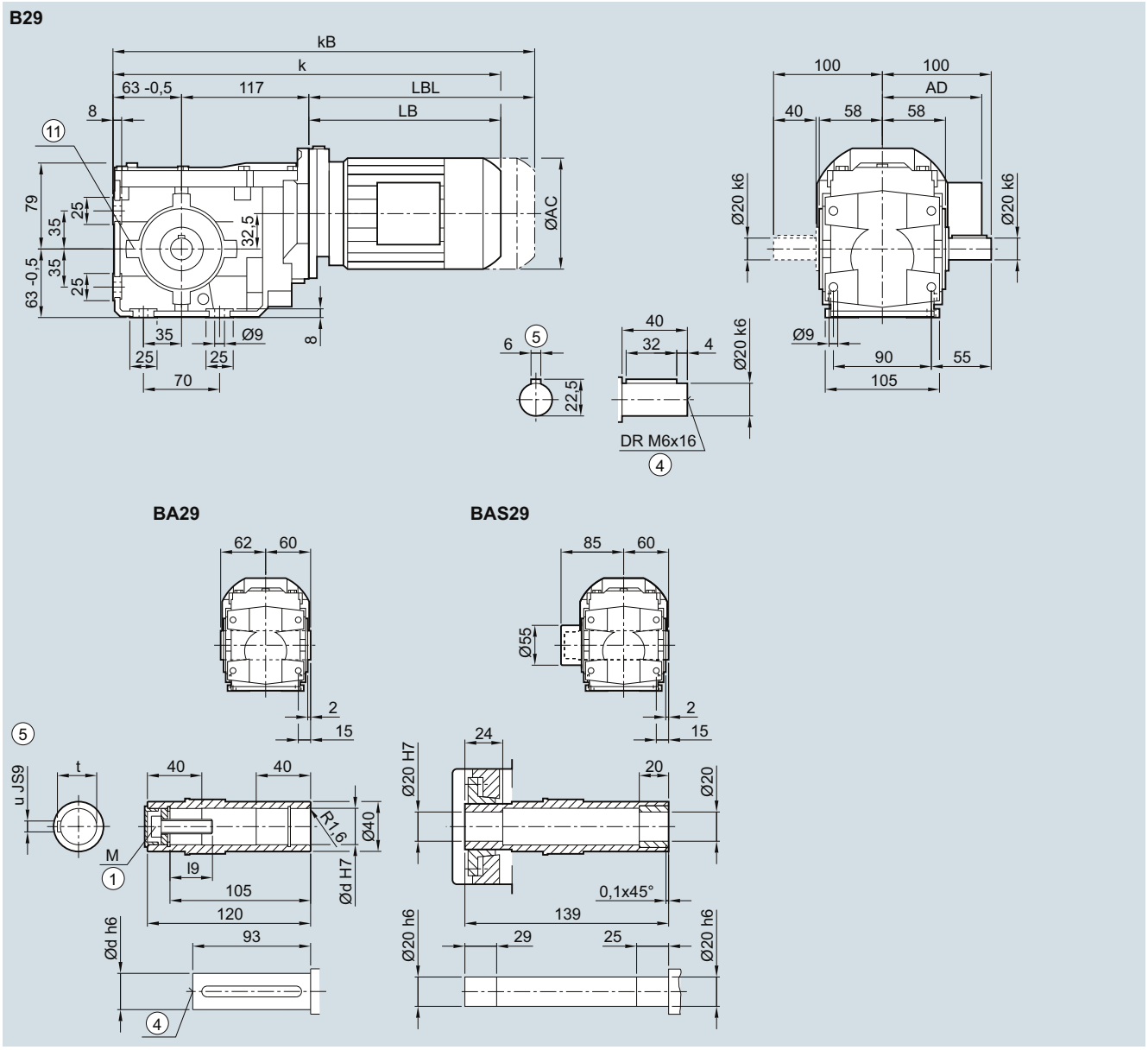

Shaft	d	l9	M	t	u
	20	23.4	M6	22.8	6
	25	27.6	M10	28.3	8

Motor	LA			LE					
	63	71	71Z	80	80Z	90	90Z	100	100Z
AC	117.8	138.8	138.8	156.3	156.3	173.8	173.8	198.0	198.0
AD[1)]	124.0	134.0	134.0	149.2	149.2	154.2	154.2	170.5	170.5
k	374.0	406.0	425.0	470.0	505.0	531.5	571.5	588.0	623.0
kB	418.5	461.0	480.0	530.0	565.0	601.5	641.5	666.5	701.5
LB	194.0	226.0	245.0	290.0	325.0	351.5	391.5	408.0	443.0
LBL	238.5	281.0	300.0	350.0	385.0	421.5	461.5	486.5	521.5

① ISO 4014
④ DIN 332
⑤ Feather key/keyway DIN 6885-1
⑪ Use bores only for housing flange design
1) AD depends on the motor options, for other dimensions see page 8/36.

© Siemens AG 2017

5

B.F.29 gearbox in a flange-mounted design

BF030, BAF030, BAFS030

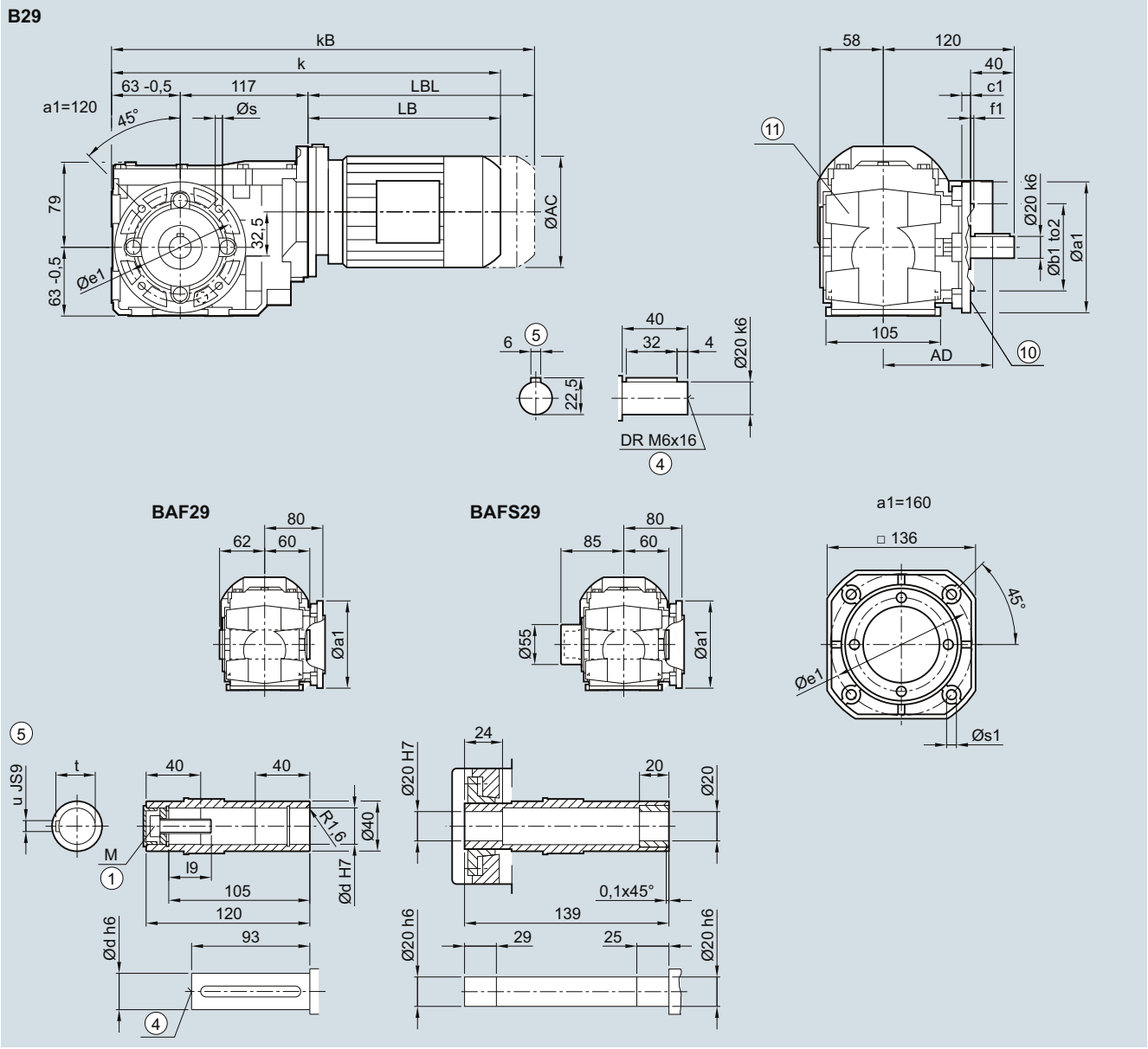

Flange	a1	b1	c1	f1	e1	s	to2
	120	80	8	3.0	100	6.6	j6
	160	110	9	3.5	130	9.0	j6

Shaft	d	l9	M	t	u
	20	23.4	M6	22.8	6
	25	27.6	M10	28.3	8

Motor	LA 63	71	71Z	LE 80	80Z	90	90Z	100	100Z
AC	117.8	138.8	138.8	156.3	156.3	173.8	173.8	198.0	198.0
AD[1)]	124.0	134.0	134.0	149.2	149.2	154.2	154.2	170.5	170.5
k	374.0	406.0	425.0	470.0	505.0	531.5	571.5	588.0	623.0
kB	418.5	461.0	480.0	530.0	565.0	601.5	641.5	666.5	701.5
LB	194.0	226.0	245.0	290.0	325.0	351.5	391.5	408.0	443.0
LBL	238.5	281.0	300.0	350.0	385.0	421.5	461.5	486.5	521.5

① ISO 4014 ④ DIN 332 ⑤ Feather key/keyway DIN 6885-1 ⑩ For inner contour see page 5/136
1) AD depends on the motor options, for other dimensions see page 8/36. ⑪ Use bores only for foot-mounted design

© Siemens AG 2017

B.Z.29 gearbox in a housing flange design

BZ030, BAZ030, BAZS030

BZ29

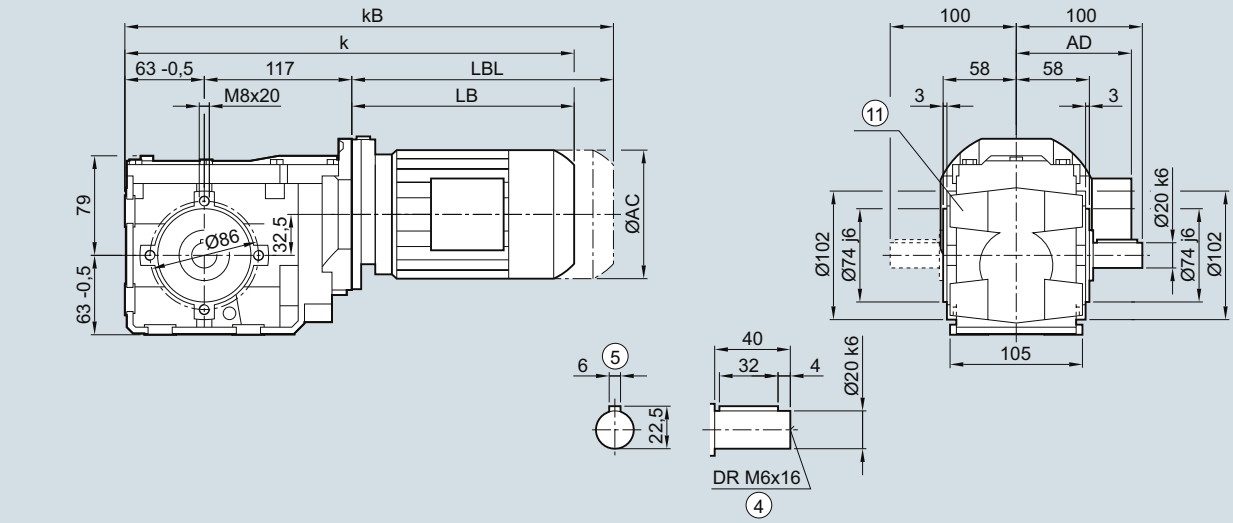

BAZ29

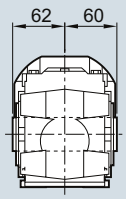

BAZS29

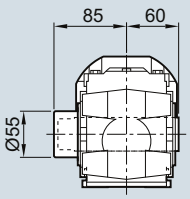

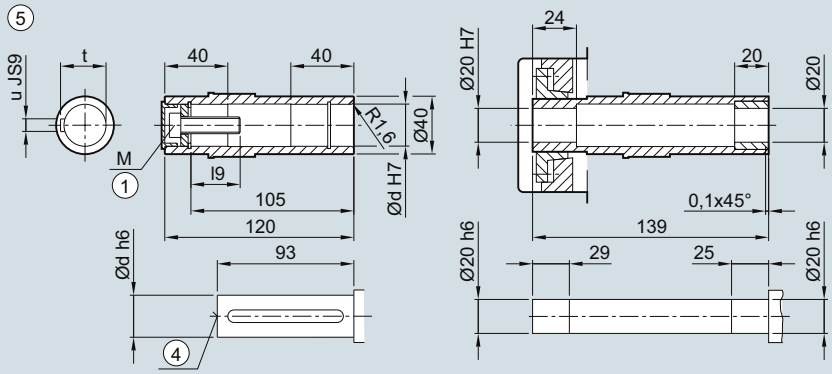

Shaft	d	l9	M	t	u
	20	23.4	M6	22.8	6
	25	27.6	M10	28.3	8

Motor	LA			LE					
	63	71	71Z	80	80Z	90	90Z	100	100Z
AC	117.8	138.8	138.8	156.3	156.3	173.8	173.8	198.0	198.0
AD[1)]	124.0	134.0	134.0	149.2	149.2	154.2	154.2	170.5	170.5
k	374.0	406.0	425.0	470.0	505.0	531.5	571.5	588.0	623.0
kB	418.5	461.0	480.0	530.0	565.0	601.5	641.5	666.5	701.5
LB	194.0	226.0	245.0	290.0	325.0	351.5	391.5	408.0	443.0
LBL	238.5	281.0	300.0	350.0	385.0	421.5	461.5	486.5	521.5

① ISO 4014
④ DIN 332
⑤ Feather key/keyway DIN 6885-1
⑪ Use bores only for foot-mounted design
1) AD depends on the motor options, for other dimensions see page 8/36.

© Siemens AG 2017

BAD.29 gearbox in a shaft-mounted design

BAD030, BADS030

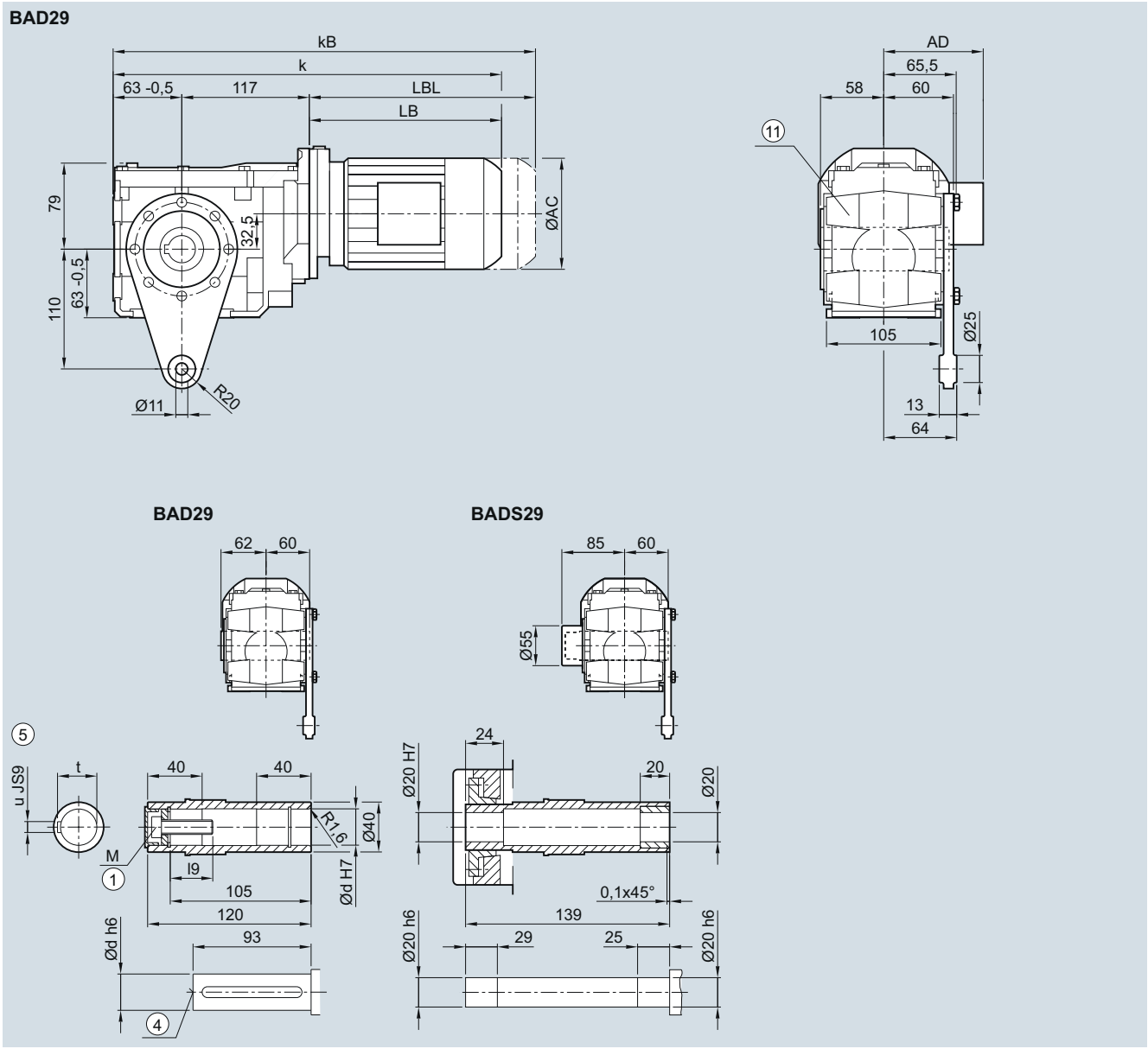

Shaft	d	l9	M	t	u
	20	23.4	M6	22.8	6
	25	27.6	M10	28.3	8

Motor	LA 63	71	71Z	LE 80	80Z	90	90Z	100	100Z
AC	117.8	138.8	138.8	156.3	156.3	173.8	173.8	198.0	198.0
AD[1)]	124.0	134.0	134.0	149.2	149.2	154.2	154.2	170.5	170.5
k	374.0	406.0	425.0	470.0	505.0	531.5	571.5	588.0	623.0
kB	418.5	461.0	480.0	530.0	565.0	601.5	641.5	666.5	701.5
LB	194.0	226.0	245.0	290.0	325.0	351.5	391.5	408.0	443.0
LBL	238.5	281.0	300.0	350.0	385.0	421.5	461.5	486.5	521.5

① ISO 4014
④ DIN 332
⑤ Feather key/keyway DIN 6885-1
⑪ Use bores only for foot-mounted design
1) AD depends on the motor options, for other dimensions see page 8/36.

© Siemens AG 2017

B..39 gearbox in a foot-mounted design

B030, BA030, BAS030

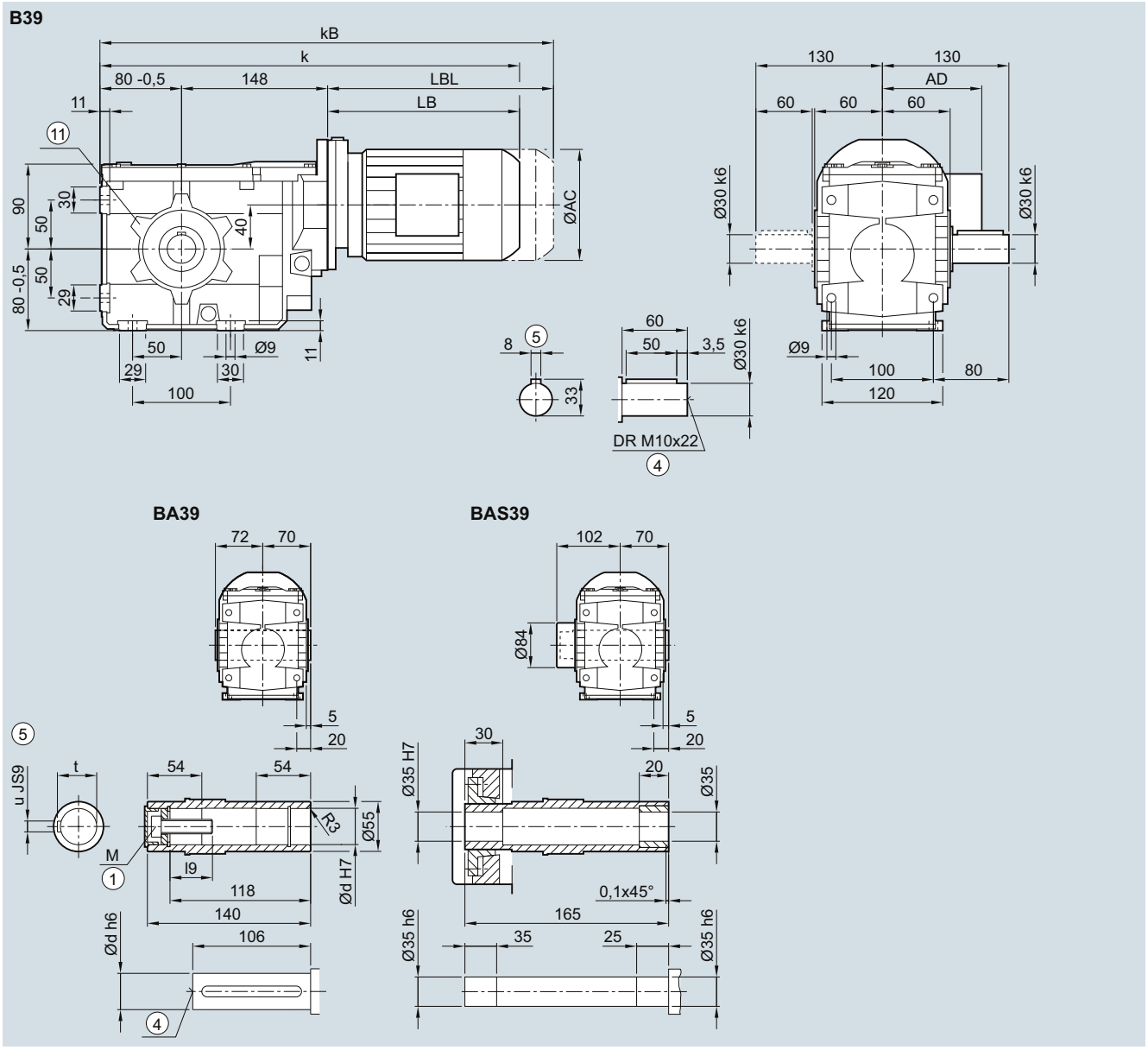

Shaft	d	l9	M	t	u
	30	32.6	M10	33.3	8
	35	37	M12	38.3	10
	40	47.75	M16	43.3	12

Motor	LA			LE							
	63	71	71Z	80	80Z	90	90Z	100	100Z	112	112Z
AC	117.8	138.8	138.8	156.3	156.3	173.8	173.8	198.0	198.0	222.0	222.0
AD[1)]	124.0	134.0	134.0	149.2	149.2	154.2	154.2	170.5	170.5	181.5	181.5
k	422.0	454.0	473.0	518.0	553.0	579.5	619.5	636.0	671.0	646.0	671.0
kB	466.5	509.0	528.0	578.0	613.0	649.5	689.5	714.5	749.5	719.0	744.0
LB	194.0	226.0	245.0	290.0	325.0	351.5	391.5	408.0	443.0	418.0	443.0
LBL	238.5	281.0	300.0	350.0	385.0	421.5	461.5	486.5	521.5	491.0	516.0

① ISO 4014
④ DIN 332
⑤ Feather key/keyway DIN 6885-1
⑪ Use bores only for housing flange design
1) AD depends on the motor options, for other dimensions see page 8/36.

© Siemens AG 2017

5

B.F.39 gearbox in a flange-mounted design

BF030, BAF030, BAFS030

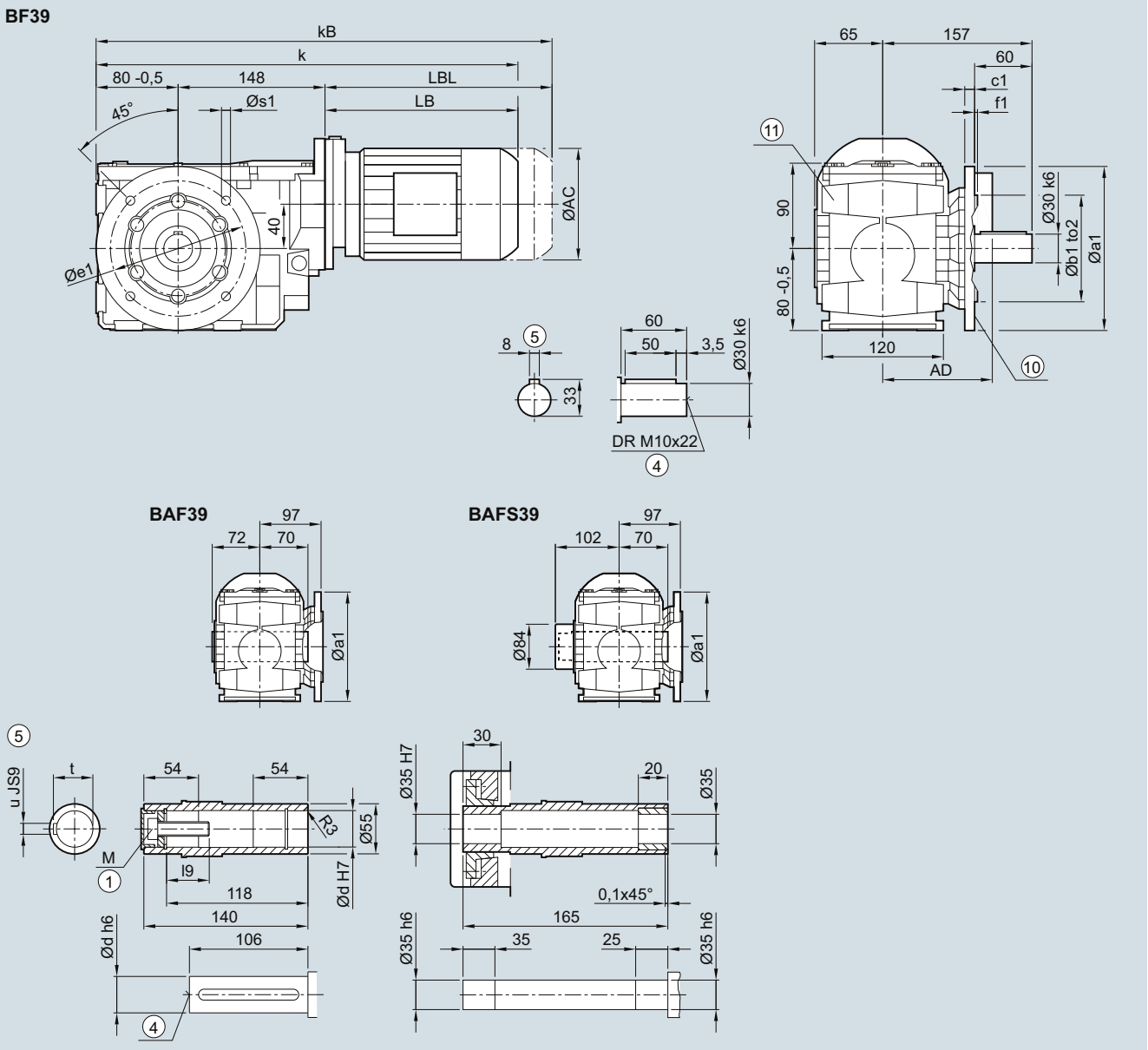

Flange	a1	b1	c1	f1	e1	s	to2
	160	110	10	3.5	130	9	j6
	200	130	12	3.5	165	11	j6

Shaft	d	l9	M	t	u
	30	32.6	M10	33.3	8
	35	37	M12	38.3	10
	40	47.75	M16	43.3	12

Motor	LA 63	71	71Z	LE 80	80Z	90	90Z	100	100Z	112	112Z
AC	117.8	138.8	138.8	156.3	156.3	173.8	173.8	198.0	198.0	222.0	222.0
AD[1)]	124.0	134.0	134.0	149.2	149.2	154.2	154.2	170.5	170.5	181.5	181.5
k	422.0	454.0	473.0	518.0	553.0	579.5	619.5	636.0	671.0	646.0	671.0
kB	466.5	509.0	528.0	578.0	613.0	649.5	689.5	714.5	749.5	719.0	744.0
LB	194.0	226.0	245.0	290.0	325.0	351.5	391.5	408.0	443.0	418.0	443.0
LBL	238.5	281.0	300.0	350.0	385.0	421.5	461.5	486.5	521.5	491.0	516.0

① ISO 4014 ④ DIN 332 ⑤ Feather key/keyway DIN 6885-1 ⑩ For inner contour see page 5/136

1) AD depends on the motor options, for other dimensions see page 8/36. ⑪ Use bores only for foot-mounted design

© Siemens AG 2017

B.Z.39 gearbox in a housing flange design

BZ030, BAZ030, BAZS030

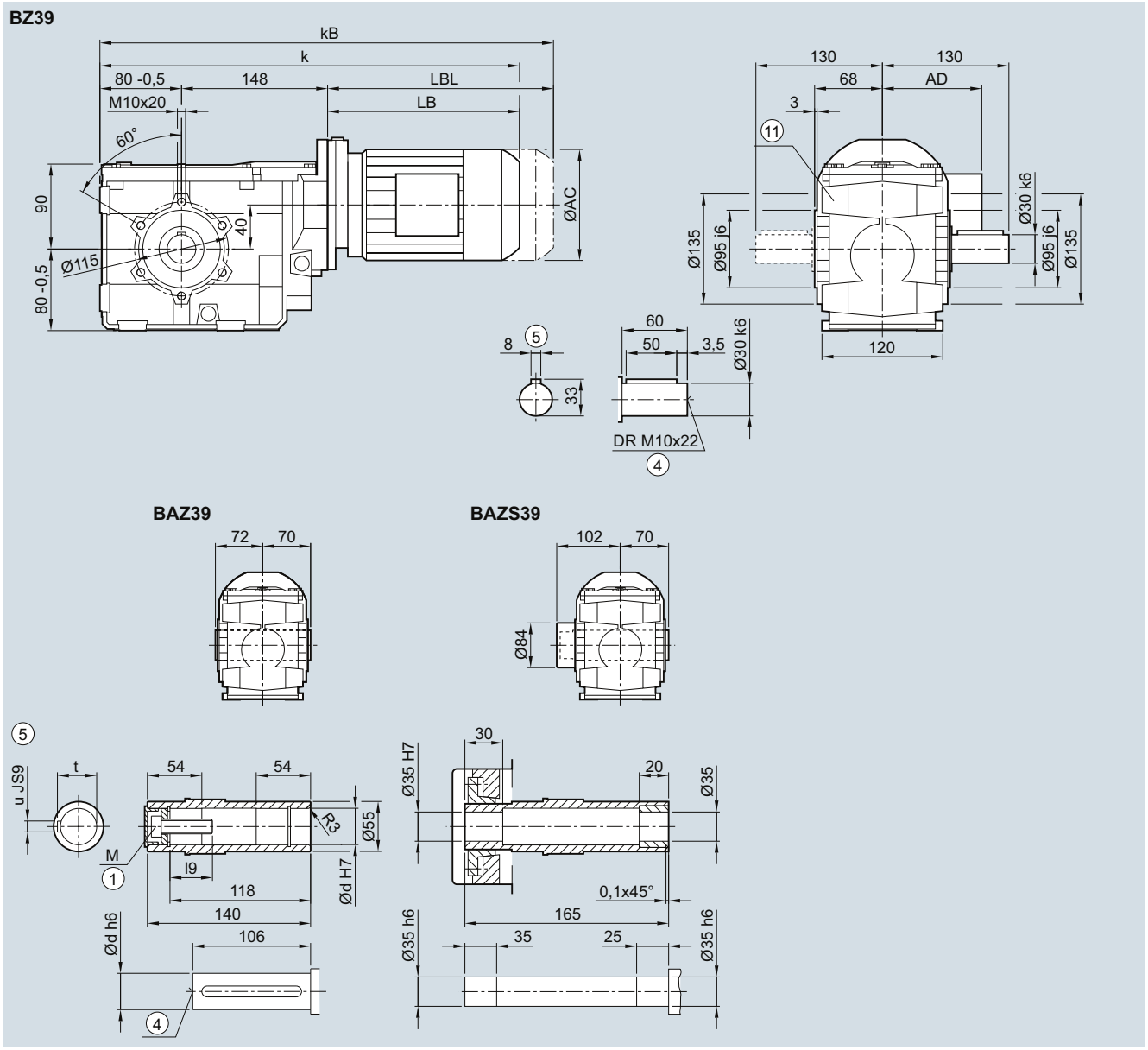

Shaft	d	l9	M	t	u
	30	32.6	M10	33.3	8
	35	37	M12	38.3	10
	40	47.75	M16	43.3	12

Motor	LA 63	71	71Z	LE 80	80Z	90	90Z	100	100Z	112	112Z
AC	117.8	138.8	138.8	156.3	156.3	173.8	173.8	198.0	198.0	222.0	222.0
AD[1)]	124.0	134.0	134.0	149.2	149.2	154.2	154.2	170.5	170.5	181.5	181.5
k	422.0	454.0	473.0	518.0	553.0	579.5	619.5	636.0	671.0	646.0	671.0
kB	466.5	509.0	528.0	578.0	613.0	649.5	689.5	714.5	749.5	719.0	744.0
LB	194.0	226.0	245.0	290.0	325.0	351.5	391.5	408.0	443.0	418.0	443.0
LBL	238.5	281.0	300.0	350.0	385.0	421.5	461.5	486.5	521.5	491.0	516.0

① ISO 4014
④ DIN 332
⑤ Feather key/keyway DIN 6885-1
⑪ Use bores only for foot-mounted design
1) AD depends on the motor options, for other dimensions see page 8/36.

© Siemens AG 2017

BAD.39 gearbox in a shaft-mounted design

BAD030, BADS030

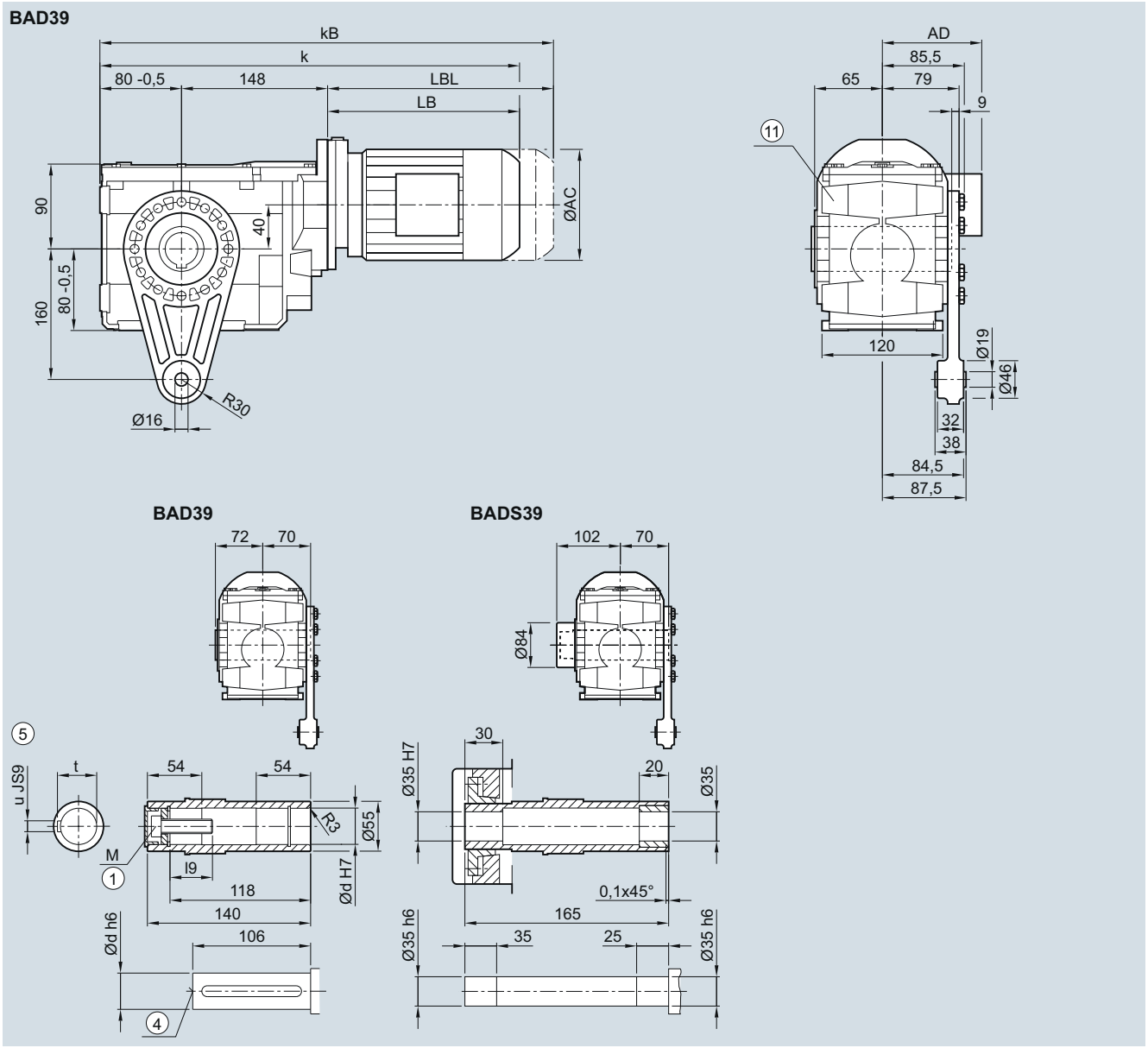

Shaft	d	l9	M	t	u
	30	32.6	M10	33.3	8
	35	37	M12	38.3	10
	40	47.75	M16	43.3	12

Motor	LA			LE						
	63	71	71Z	80	80Z	90	90Z	100	100Z	112	112Z
AC	117.8	138.8	138.8	156.3	156.3	173.8	173.8	198.0	198.0	222.0	222.0
AD[1)]	124.0	134.0	134.0	149.2	149.2	154.2	154.2	170.5	170.5	181.5	181.5
k	422.0	454.0	473.0	518.0	553.0	579.5	619.5	636.0	671.0	646.0	671.0
kB	466.5	509.0	528.0	578.0	613.0	649.5	689.5	714.5	749.5	719.0	744.0
LB	194.0	226.0	245.0	290.0	325.0	351.5	391.5	408.0	443.0	418.0	443.0
LBL	238.5	281.0	300.0	350.0	385.0	421.5	461.5	486.5	521.5	491.0	516.0

① ISO 4014
④ DIN 332
⑤ Feather key/keyway DIN 6885-1
⑪ Use bores only for foot-mounted design
1) AD depends on the motor options, for other dimensions see page 8/36.

© Siemens AG 2017

B..49 gearbox in a foot-mounted design

B030, BA030, BAS030

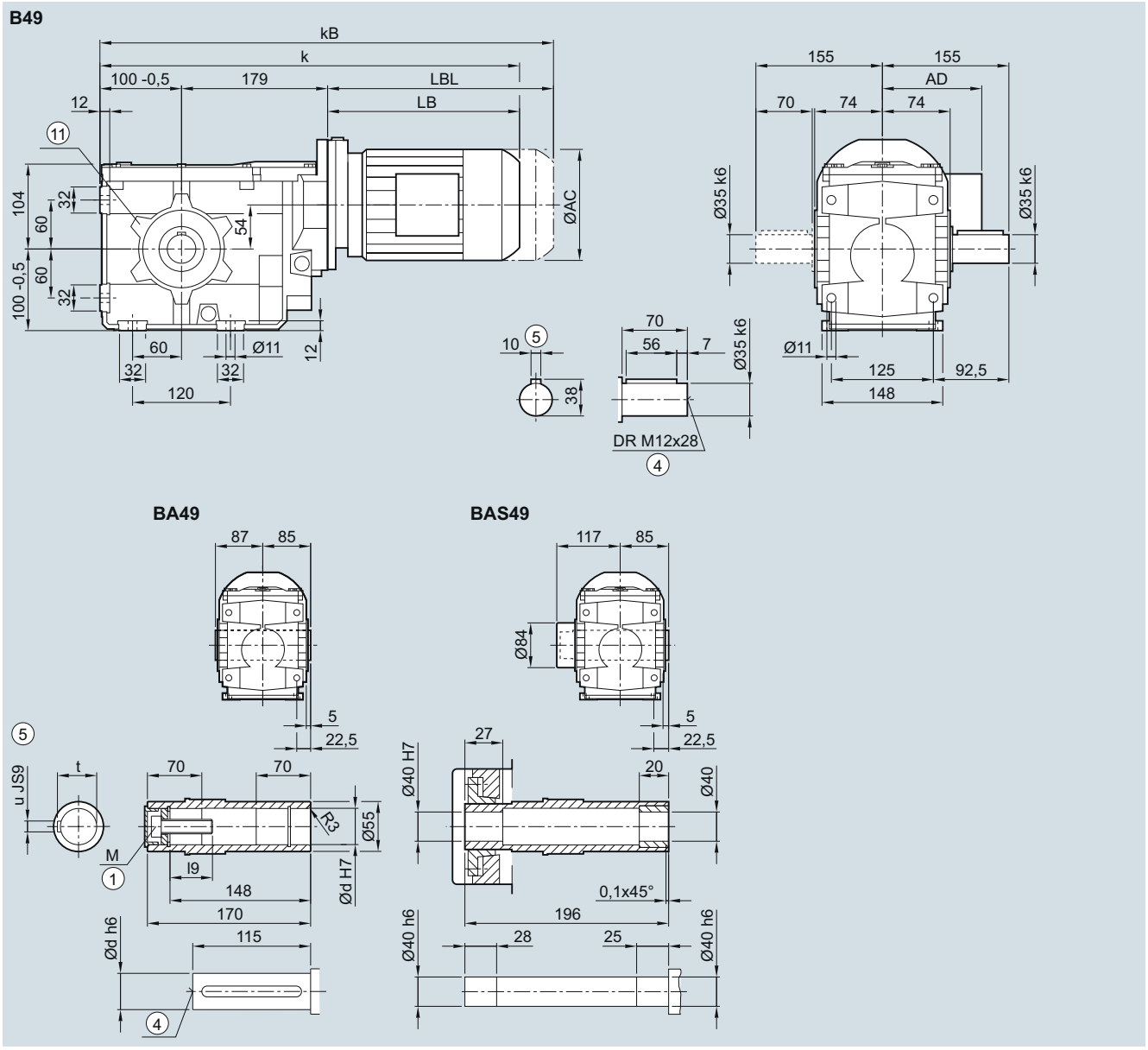

Shaft	d	l9	M	t	u
	35	57	M12	38.3	10
	40	67.75	M16	43.3	12

Motor	LA			LE								
	63	71	71Z	80	80Z	90	90Z	100	100Z	112	112Z	132	132Z
AC	117.8	138.8	138.8	156.3	156.3	173.8	173.8	198.0	198.0	222.0	222.0	264.0	264.0
AD[1)]	124.0	134.0	134.0	149.2	149.2	154.2	154.2	170.5	170.5	181.5	181.5	207.0	207.0
k	463.5	495.5	514.5	559.5	594.5	621.0	661.0	677.5	712.5	687.5	722.0	740.5	790.5
kB	508.0	550.5	569.5	619.5	654.5	691.0	731.0	756.0	791.0	760.5	795.0	845.0	895.0
LB	184.5	216.5	235.5	280.5	315.5	342.0	382.0	398.5	433.5	408.5	443.0	461.5	511.5
LBL	229.0	271.5	290.5	340.5	375.5	412.0	452.0	477.0	512.0	481.5	516.0	566.0	616.0

① ISO 4014
④ DIN 332
⑤ Feather key/keyway DIN 6885-1
⑪ Use bores only for housing flange design
1) AD depends on the motor options, for other dimensions see page 8/36.

© Siemens AG 2017

5

B.F.49 gearbox in a flange-mounted design

BF030, BAF030, BAFS030

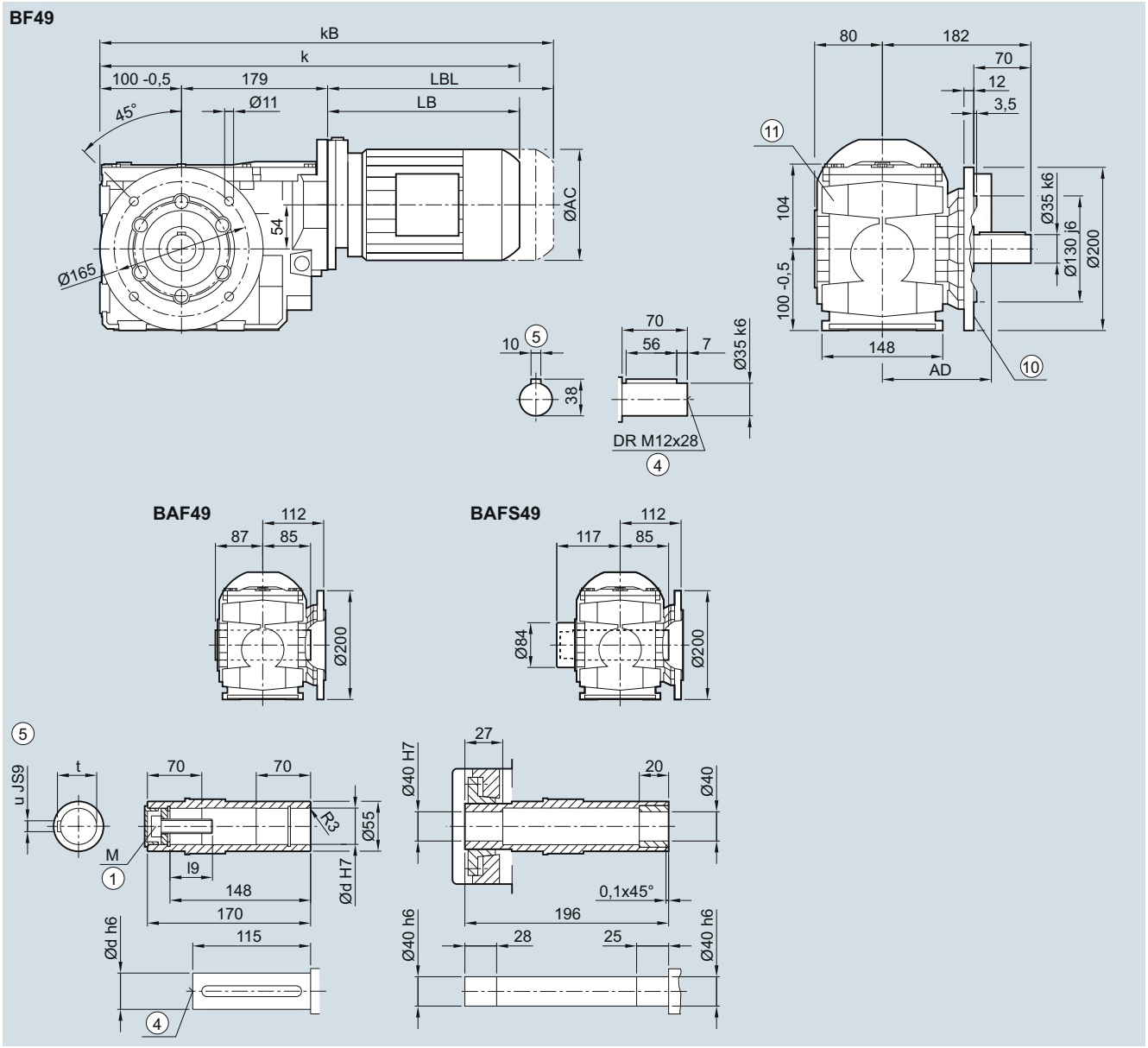

Shaft	d	l9	M	t	u
	35	57	M12	38.3	10
	40	67.75	M16	43.3	12

Motor	LA			LE									
	63	71	71Z	80	80Z	90	90Z	100	100Z	112	112Z	132	132Z
AC	117.8	138.8	138.8	156.3	156.3	173.8	173.8	198.0	198.0	222.0	222.0	264.0	264.0
AD[1)]	124.0	134.0	134.0	149.2	149.2	154.2	154.2	170.5	170.5	181.5	181.5	207.0	207.0
k	463.5	495.5	514.5	559.5	594.5	621.0	661.0	677.5	712.5	687.5	722.0	740.5	790.5
kB	508.0	550.5	569.5	619.5	654.5	691.0	731.0	756.0	791.0	760.5	795.0	845.0	895.0
LB	184.5	216.5	235.5	280.5	315.5	342.0	382.0	398.5	433.5	408.5	443.0	461.5	511.5
LBL	229.0	271.5	290.5	340.5	375.5	412.0	452.0	477.0	512.0	481.5	516.0	566.0	616.0

① ISO 4014 ④ DIN 332 ⑤ Feather key/keyway DIN 6885-1 ⑩ For inner contour see page 5/136

1) AD depends on the motor options, for other dimensions see page 8/36. ⑪ Use bores only for foot-mounted design

© Siemens AG 2017

B.Z.49 gearbox in a housing flange design

BZ030, BAZ030, BAZS030

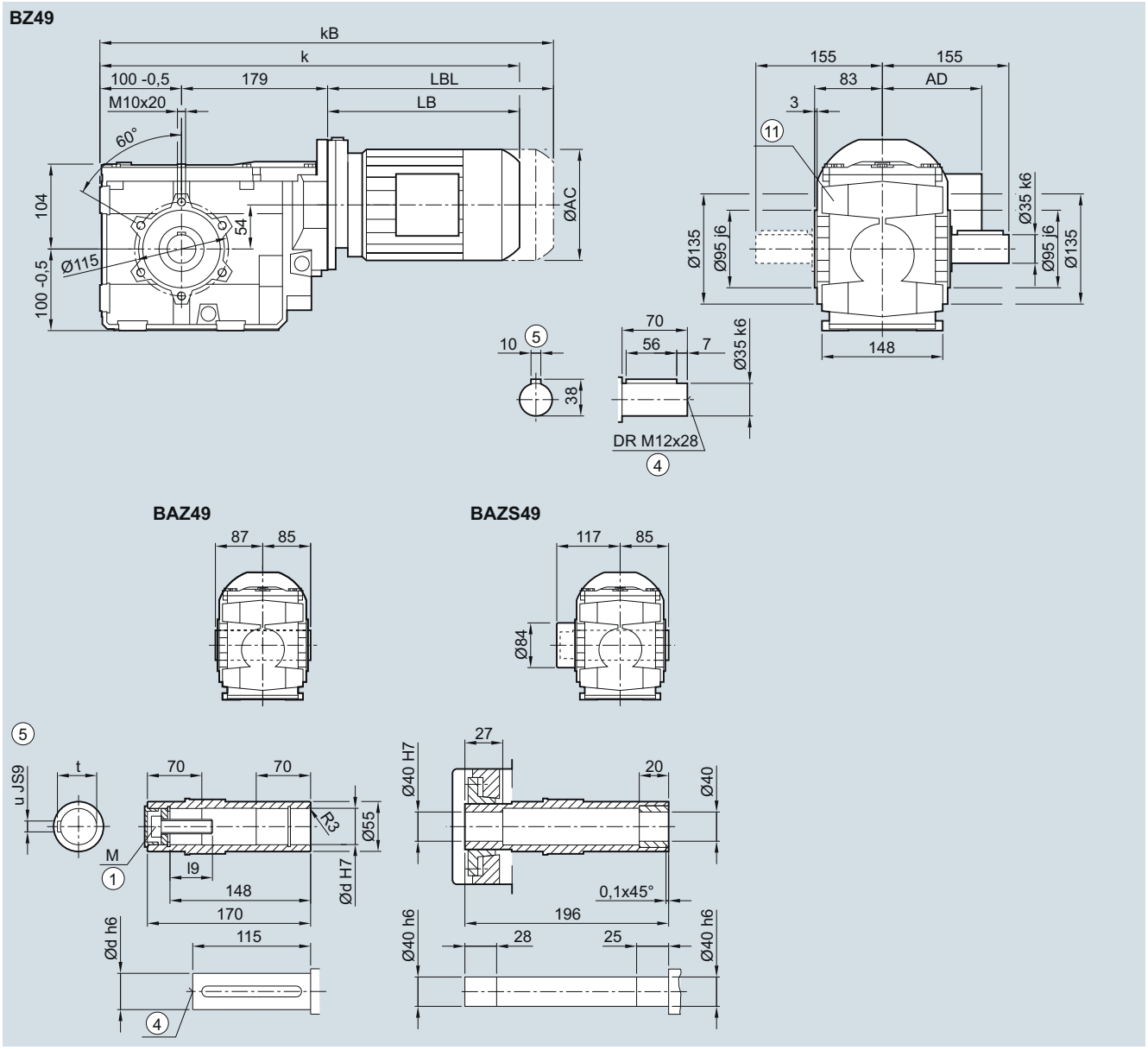

Shaft	d	l9	M	t	u
	35	57	M12	38.3	10
	40	67.75	M16	43.3	12

Motor	LA			LE									
	63	71	71Z	80	80Z	90	90Z	100	100Z	112	112Z	132	132Z
AC	117.8	138.8	138.8	156.3	156.3	173.8	173.8	198.0	198.0	222.0	222.0	264.0	264.0
AD[1)]	124.0	134.0	134.0	149.2	149.2	154.2	154.2	170.5	170.5	181.5	181.5	207.0	207.0
k	463.5	495.5	514.5	559.5	594.5	621.0	661.0	677.5	712.5	687.5	722.0	740.5	790.5
kB	508.0	550.5	569.5	619.5	654.5	691.0	731.0	756.0	791.0	760.5	795.0	845.0	895.0
LB	184.5	216.5	235.5	280.5	315.5	342.0	382.0	398.5	433.5	408.5	443.0	461.5	511.5
LBL	229.0	271.5	290.5	340.5	375.5	412.0	452.0	477.0	512.0	481.5	516.0	566.0	616.0

① ISO 4014
④ DIN 332
⑤ Feather key/keyway DIN 6885-1
⑪ Use bores only for foot-mounted design
1) AD depends on the motor options, for other dimensions see page 8/36.

© Siemens AG 2017

BAD.49 gearbox in a shaft-mounted design

BAD030, BADS030

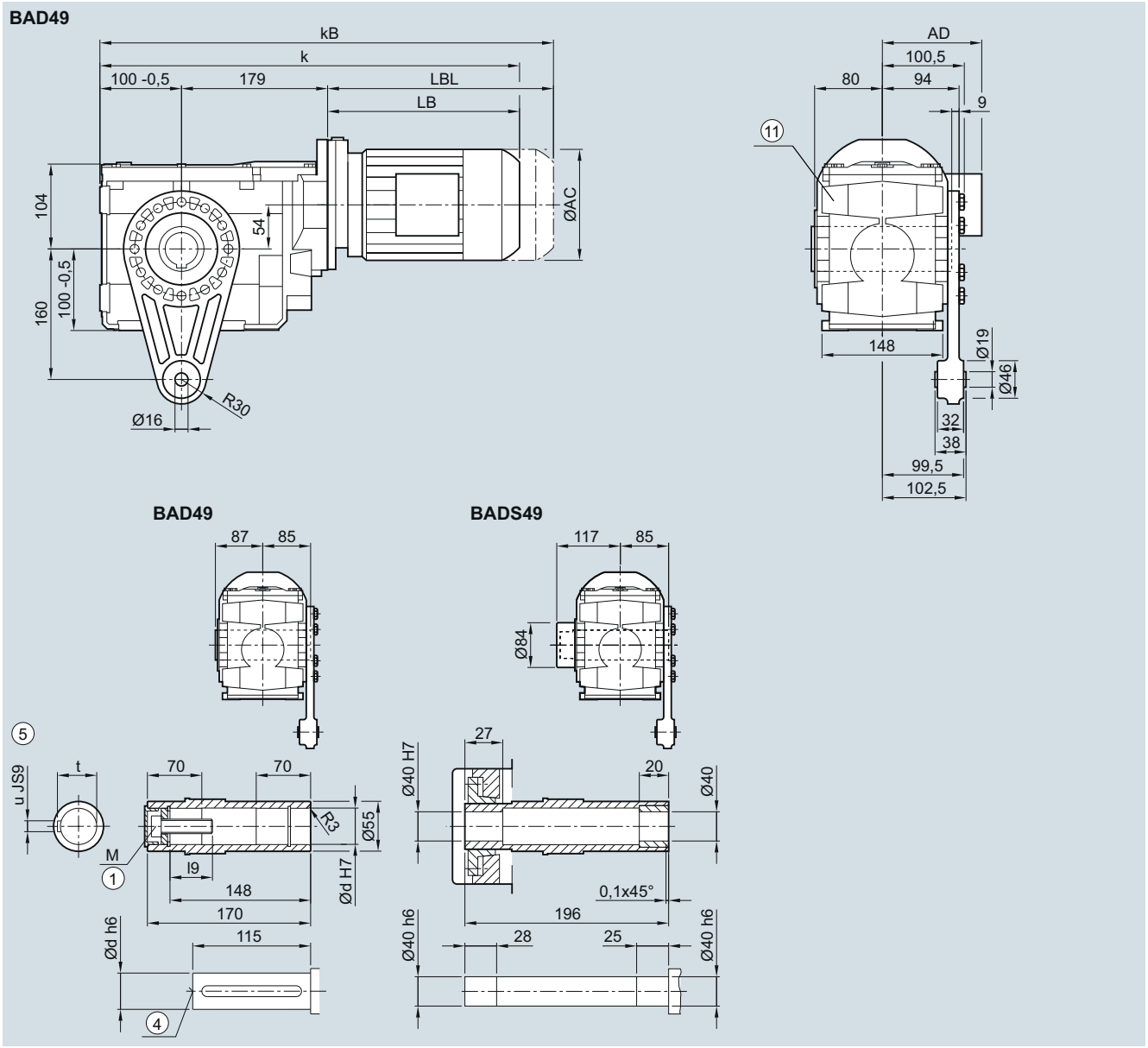

Shaft	d	l9	M	t	u
	35	57	M12	38.3	10
	40	67.75	M16	43.3	12

Motor	LA			LE									
	63	71	71Z	80	80Z	90	90Z	100	100Z	112	112Z	132	132Z
AC	117.8	138.8	138.8	156.3	156.3	173.8	173.8	198.0	198.0	222.0	222.0	264.0	264.0
AD[1)]	124.0	134.0	134.0	149.2	149.2	154.2	154.2	170.5	170.5	181.5	181.5	207.0	207.0
k	463.5	495.5	514.5	559.5	594.5	621.0	661.0	677.5	712.5	687.5	722.0	740.5	790.5
kB	508.0	550.5	569.5	619.5	654.5	691.0	731.0	756.0	791.0	760.5	795.0	845.0	895.0
LB	184.5	216.5	235.5	280.5	315.5	342.0	382.0	398.5	433.5	408.5	443.0	461.5	511.5
LBL	229.0	271.5	290.5	340.5	375.5	412.0	452.0	477.0	512.0	481.5	516.0	566.0	616.0

① ISO 4014
④ DIN 332
⑤ Feather key/keyway DIN 6885-1
1) AD depends on the motor options, for other dimensions see page 8/36.
⑪ Use bores only for foot-mounted design

© Siemens AG 2017

K..39 gearbox in a foot-mounted design

K030, KA030, KAS030, KAT030

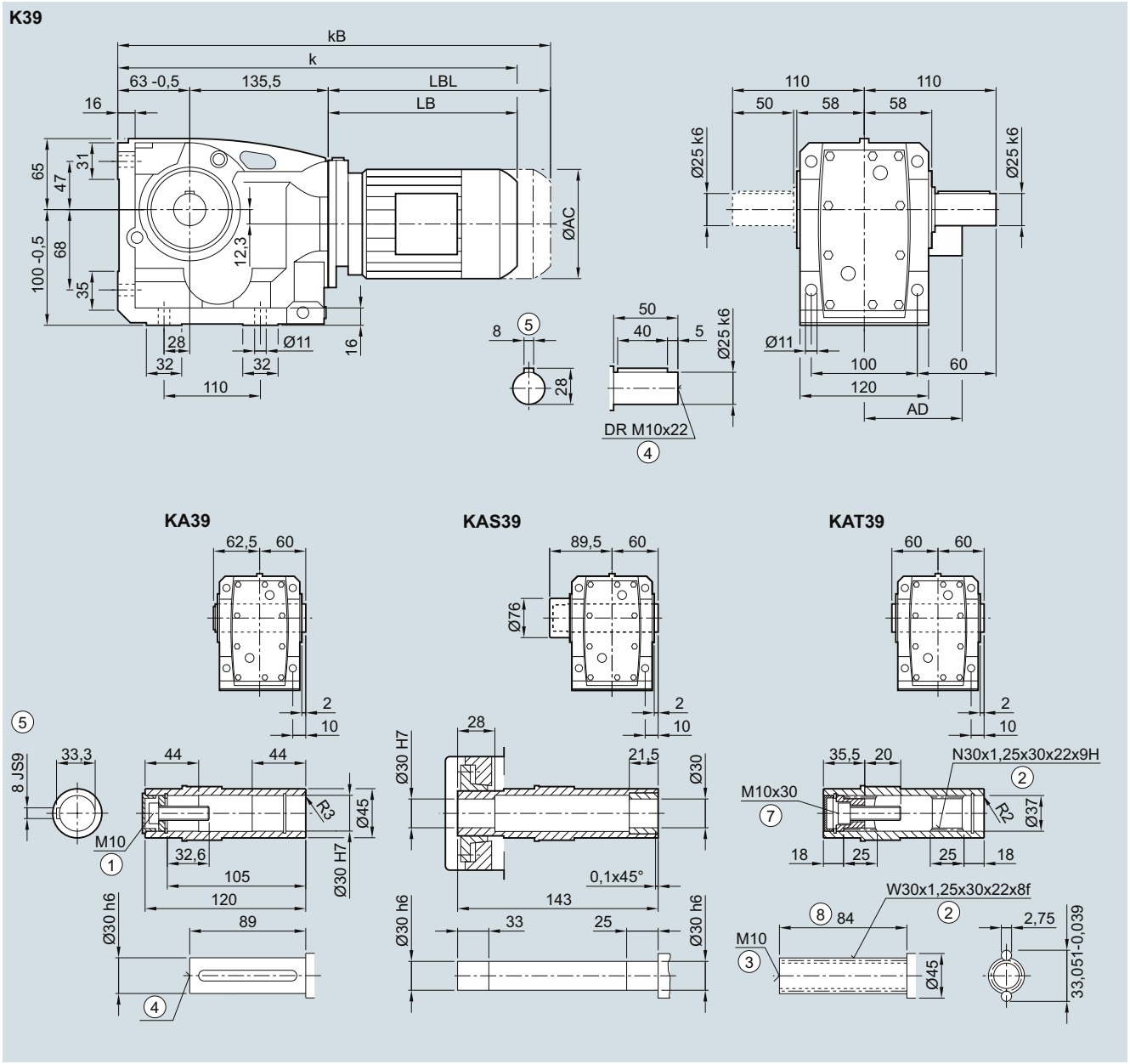

Motor	LA			LE							
	63	71	71Z	80	80Z	90	90Z	100	100Z	112	112Z
AC	117.8	138.8	138.8	156.3	156.3	173.8	173.8	198.0	198.0	222.0	222.0
AD[1)]	124.0	134.0	134.0	149.2	149.2	154.2	154.2	170.5	170.5	181.5	181.5
k	392.0	424.0	443.0	488.0	523.0	549.5	589.5	606.0	641.0	616.0	641.0
kB	436.5	479.0	498.0	548.0	583.0	619.5	659.5	684.5	719.5	689.0	714.0
LB	194.0	226.0	245.0	290.0	325.0	351.5	391.5	408.0	443.0	418.0	443.0
LBL	238.5	281.0	300.0	350.0	385.0	421.5	461.5	486.5	521.5	491.0	516.0

① ISO 4014 ② DIN 5480 ③ DIN 332-D ④ DIN 332 ⑤ Feather key/keyway DIN 6885-1 ⑦ ISO 4762 ⑧ Without locating shoulder +1 mm

[1)] AD depends on the motor options, for other dimensions see page 8/36.

© Siemens AG 2017

5

K.F.39 gearbox in a flange-mounted design

KF030, KAF030, KAFS030, KAFT030

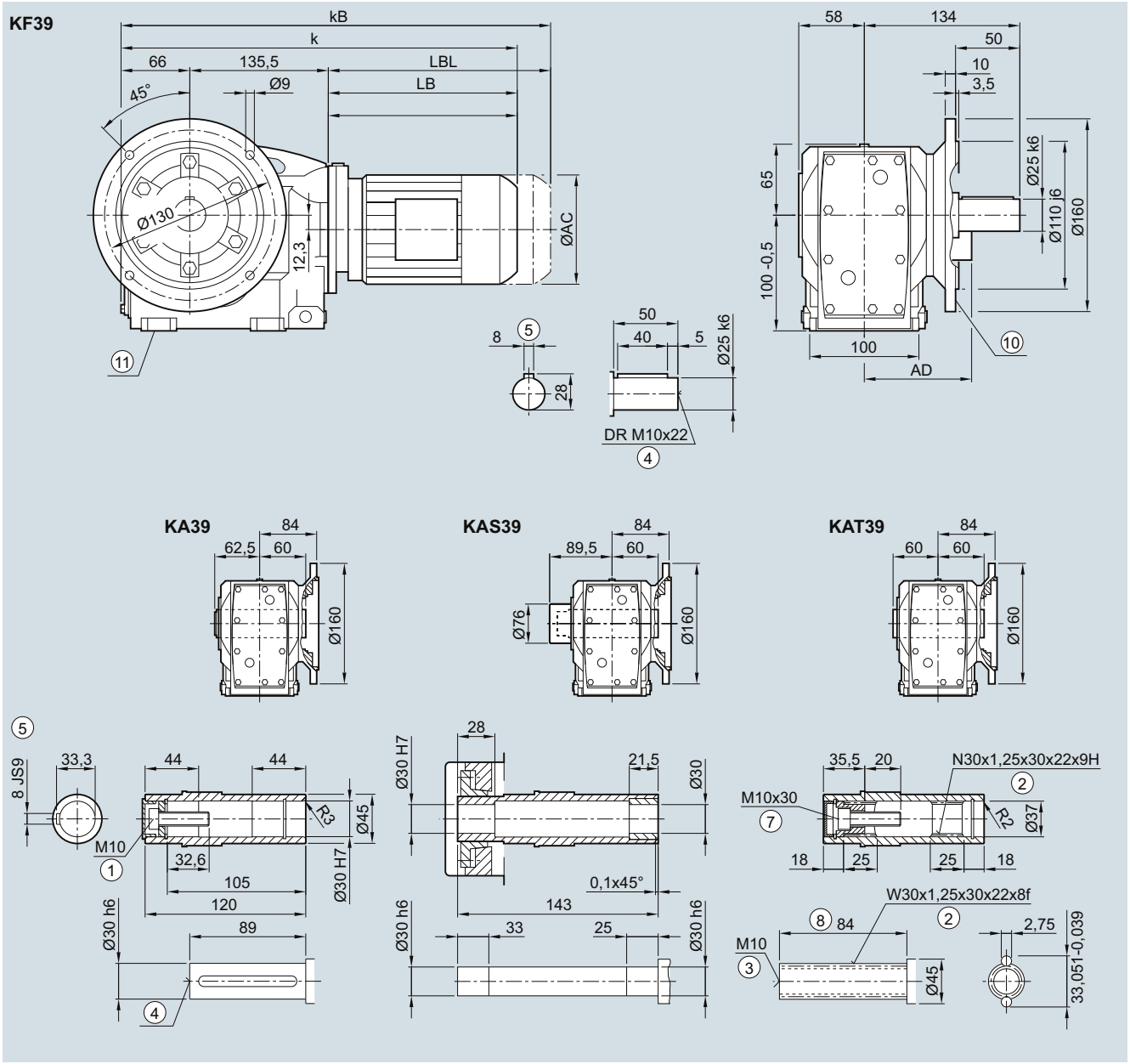

Motor	LA			LE							
	63	71	71Z	80	80Z	90	90Z	100	100Z	112	112Z
AC	117.8	138.8	138.8	156.3	156.3	173.8	173.8	198.0	198.0	222.0	222.0
AD[1)]	124.0	134.0	134.0	149.2	149.2	154.2	154.2	170.5	170.5	181.5	181.5
k	395.0	427.0	446.0	491.0	526.0	552.5	592.5	609.0	644.0	619.0	644.0
kB	439.5	482.0	501.0	551.0	586.0	622.5	662.5	687.5	722.5	692.0	717.0
LB	194.0	226.0	245.0	290.0	325.0	351.5	391.5	408.0	443.0	418.0	443.0
LBL	238.5	281.0	300.0	350.0	385.0	421.5	461.5	486.5	521.5	491.0	516.0

① ISO 4014 ② DIN 5480 ③ DIN 332-D ④ DIN 332 ⑤ Feather key/keyway DIN 6885-1 ⑦ ISO 4762 ⑧ Without locating shoulder +1 mm
⑩ For inner contour see page 5/136 ⑪ Use bores only for foot-mounted design
1) AD depends on the motor options, for other dimensions see page 8/36.

© Siemens AG 2017

K.Z.39 gearbox in a housing flange design

KZ030, KAZ030, KAZS030, KAZT030

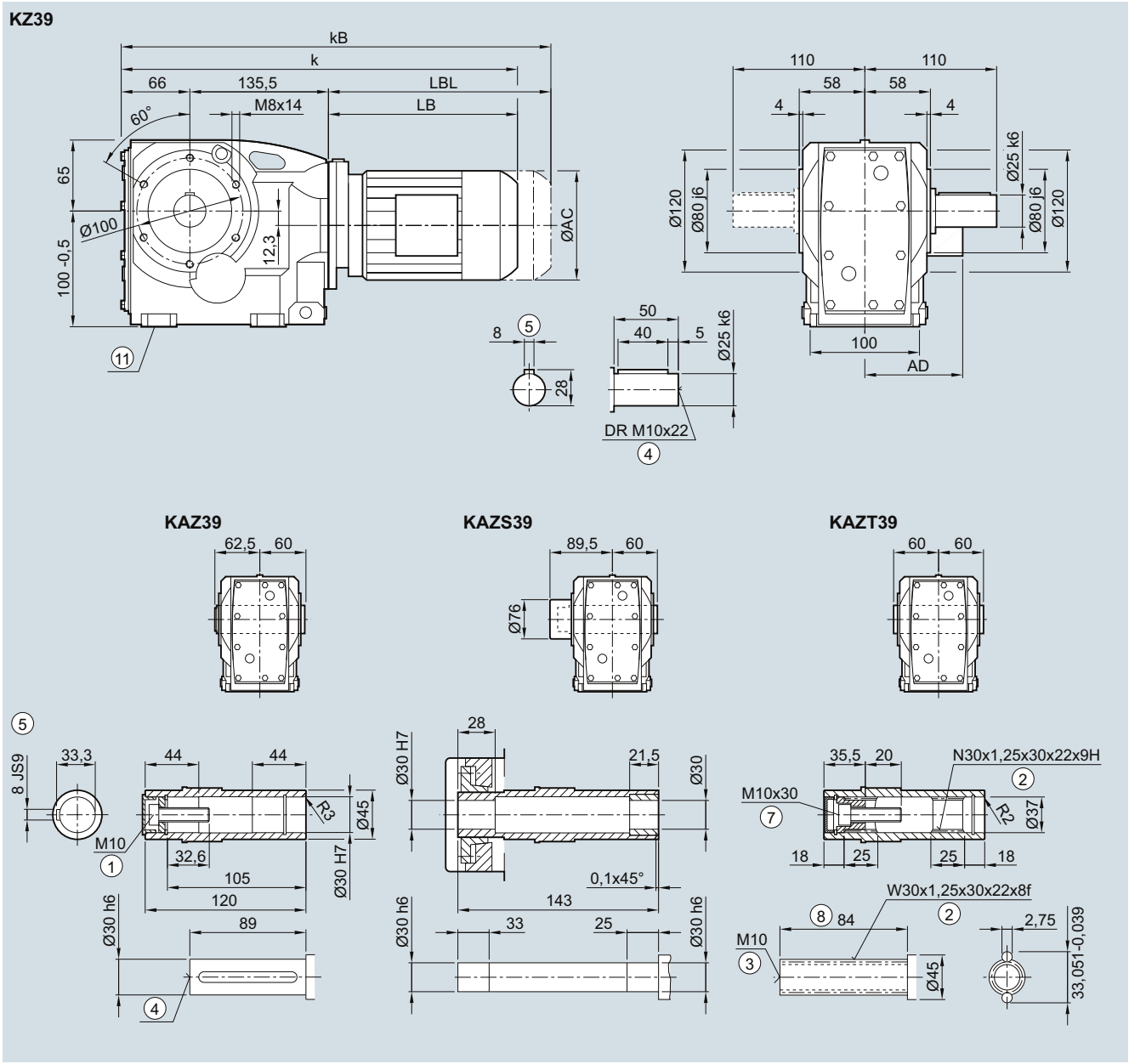

Motor	LA			LE							
	63	71	71Z	80	80Z	90	90Z	100	100Z	112	112Z
AC	117.8	138.8	138.8	156.3	156.3	173.8	173.8	198.0	198.0	222.0	222.0
AD[1)]	124.0	134.0	134.0	149.2	149.2	154.2	154.2	170.5	170.5	181.5	181.5
k	395.0	427.0	446.0	491.0	526.0	552.5	592.5	609.0	644.0	619.0	644.0
kB	439.5	482.0	501.0	551.0	586.0	622.5	662.5	687.5	722.5	692.0	717.0
LB	194.0	226.0	245.0	290.0	325.0	351.5	391.5	408.0	443.0	418.0	443.0
LBL	238.5	281.0	300.0	350.0	385.0	421.5	461.5	486.5	521.5	491.0	516.0

① ISO 4014 ② DIN 5480 ③ DIN 332-D ④ DIN 332 ⑤ Feather key/keyway DIN 6885-1 ⑦ ISO 4762 ⑧ Without locating shoulder +1 mm
⑪ Use bores only for foot-mounted design

1) AD depends on the motor options, for other dimensions see page 8/36.

© Siemens AG 2017

5

KAD.39 gearbox in a shaft-mounted design

KAD031, KADS031, KADT031

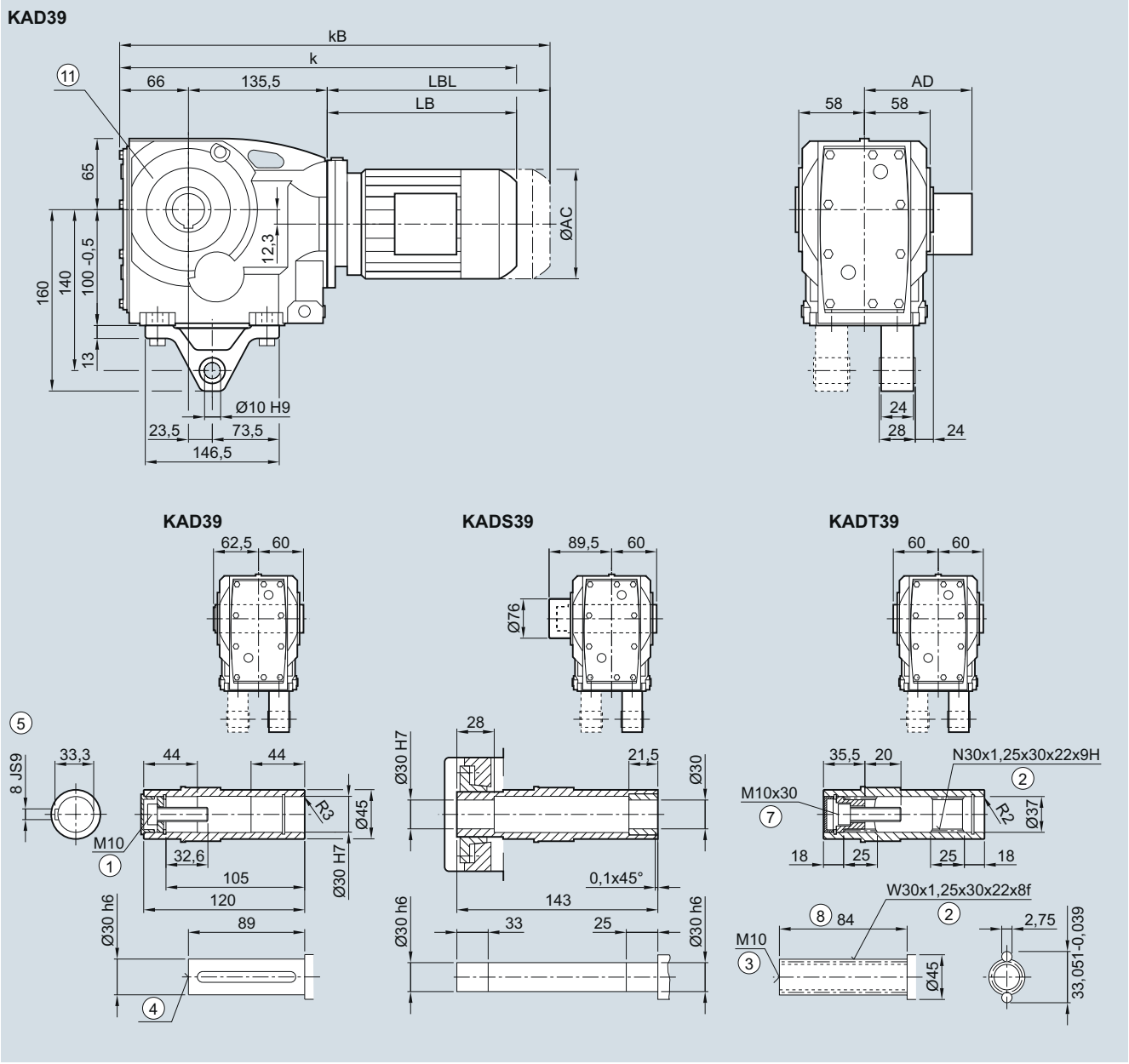

Motor	LA			LE							
	63	71	71Z	80	80Z	90	90Z	100	100Z	112	112Z
AC	117.8	138.8	138.8	156.3	156.3	173.8	173.8	198.0	198.0	222.0	222.0
AD[1)]	124.0	134.0	134.0	149.2	149.2	154.2	154.2	170.5	170.5	181.5	181.5
k	395.0	427.0	446.0	491.0	526.0	552.5	592.5	609.0	644.0	619.0	644.0
kB	439.5	482.0	501.0	551.0	586.0	622.5	662.5	687.5	722.5	692.0	717.0
LB	194.0	226.0	245.0	290.0	325.0	351.5	391.5	408.0	443.0	418.0	443.0
LBL	238.5	281.0	300.0	350.0	385.0	421.5	461.5	486.5	521.5	491.0	516.0

① ISO 4014 ② DIN 5480 ③ DIN 332-D ④ DIN 332 ⑤ Feather key/keyway DIN 6885-1 ⑦ ISO 4762 ⑧ Without locating shoulder +1 mm
⑪ Use bores only for housing flange design
1) AD depends on the motor options, for other dimensions see page 8/36.

© Siemens AG 2017

K..49 gearbox in a foot-mounted design

K030, KA030, KAS030, KAT030

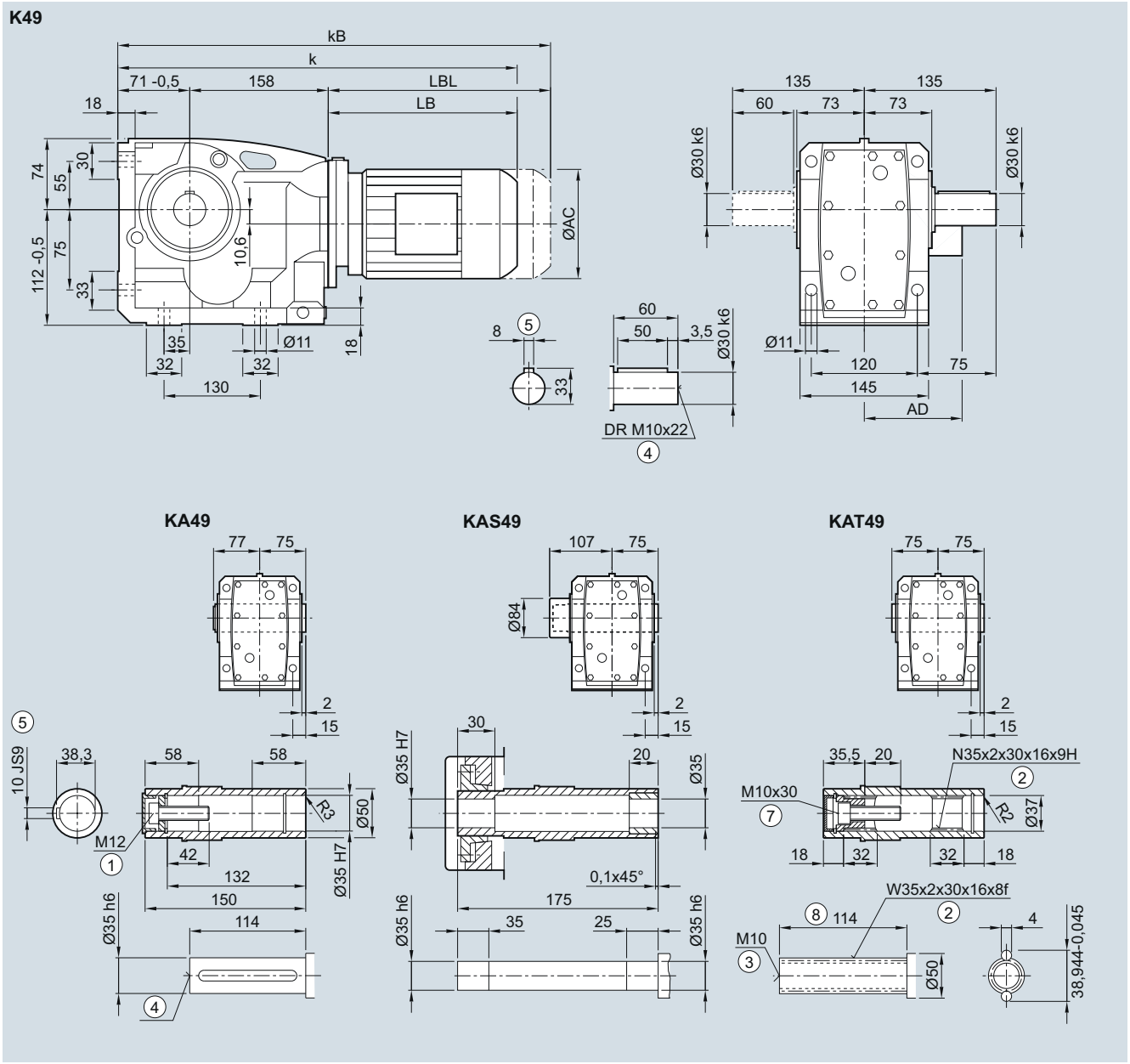

Motor	LA			LE									
	63	71	71Z	80	80Z	90	90Z	100	100Z	112	112Z	132	132Z
AC	117.8	138.8	138.8	156.3	156.3	173.8	173.8	198.0	198.0	222.0	222.0	264.0	264.0
AD[1)]	124.0	134.0	134.0	149.2	149.2	154.2	154.2	170.5	170.5	181.5	181.5	207.0	207.0
k	413.5	445.5	464.5	509.5	544.5	571.0	611.0	627.5	662.5	637.5	672.0	690.5	740.5
kB	458.0	500.5	519.5	569.5	604.5	641.0	681.0	706.0	741.0	710.5	745.0	795.0	845.0
LB	184.5	216.5	235.5	280.5	315.5	342.0	382.0	398.5	433.5	408.5	443.0	461.5	511.5
LBL	229.0	271.5	290.5	340.5	375.5	412.0	452.0	477.0	512.0	481.5	516.0	566.0	616.0

① ISO 4014 ② DIN 5480 ③ DIN 332-D ④ DIN 332 ⑤ Feather key/keyway DIN 6885-1 ⑦ ISO 4762 ⑧ Without locating shoulder +1 mm

[1)] AD depends on the motor options, for other dimensions see page 8/36.

© Siemens AG 2017

K.F.49 gearbox in a flange-mounted design

KF030, KAF030, KAFS030, KAFT030

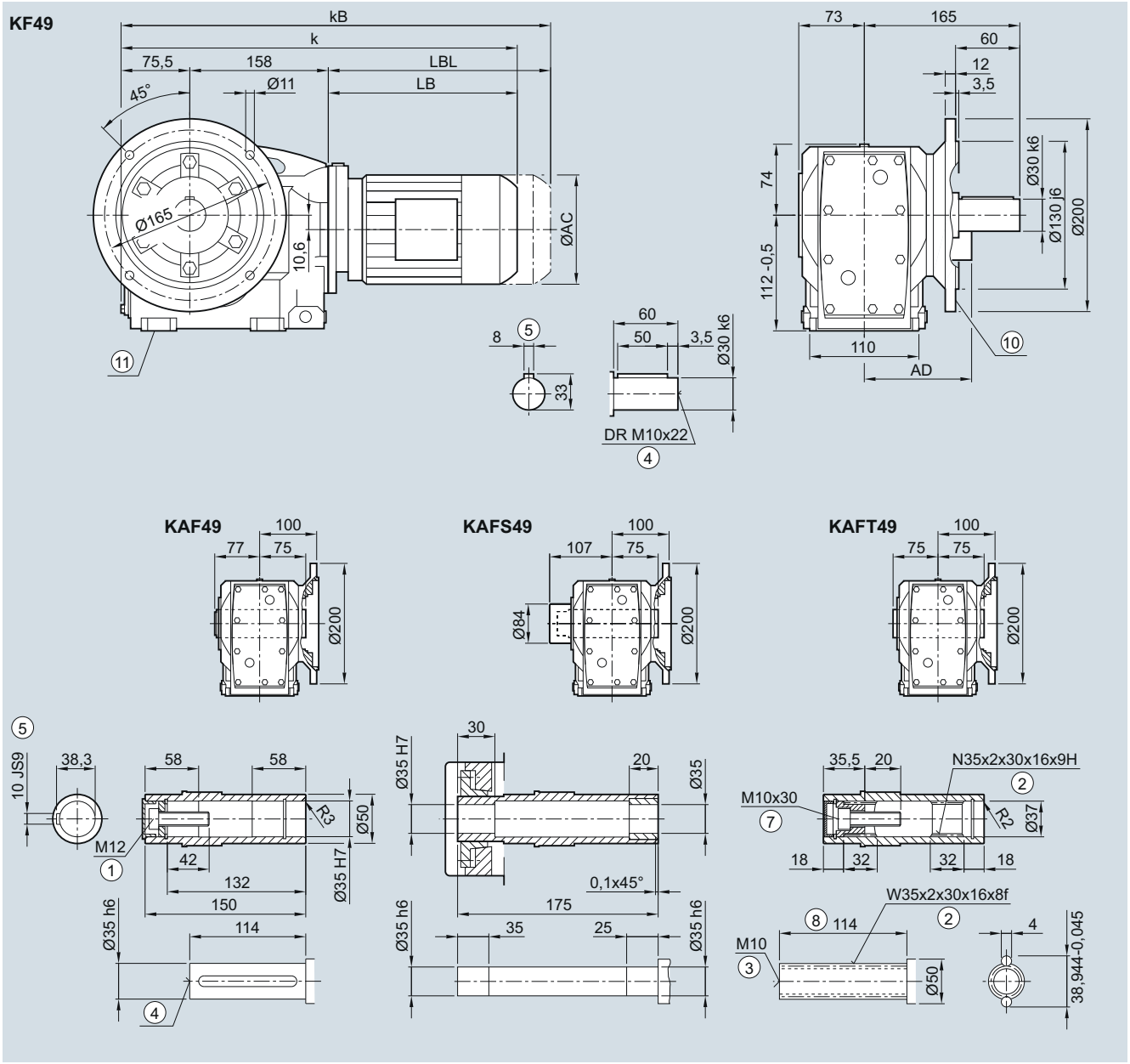

Motor	LA 63	71	71Z	LE 80	80Z	90	90Z	100	100Z	112	112Z	132	132Z
AC	117.8	138.8	138.8	156.3	156.3	173.8	173.8	198.0	198.0	222.0	222.0	264.0	264.0
AD[1)]	124.0	134.0	134.0	149.2	149.2	154.2	154.2	170.5	170.5	181.5	181.5	207.0	207.0
k	418.0	450.0	469.0	514.0	549.0	575.5	615.5	632.0	667.0	642.0	676.5	695.0	745.0
kB	462.5	505.0	524.0	574.0	609.0	645.5	685.5	710.5	745.5	715.0	749.5	799.5	849.5
LB	184.5	216.5	235.5	280.5	315.5	342.0	382.0	398.5	433.5	408.5	443.0	461.5	511.5
LBL	229.0	271.5	290.5	340.5	375.5	412.0	452.0	477.0	512.0	481.5	516.0	566.0	616.0

① ISO 4014 ② DIN 5480 ③ DIN 332-D ④ DIN 332 ⑤ Feather key/keyway DIN 6885-1 ⑦ ISO 4762 ⑧ Without locating shoulder +1 mm
⑩ For inner contour see page 5/136 ⑪ Use bores only for foot-mounted design
1) AD depends on the motor options, for other dimensions see page 8/36.

© Siemens AG 2017

K.Z.49 gearbox in a housing flange design

KZ030, KAZ030, KAZS030, KAZT030

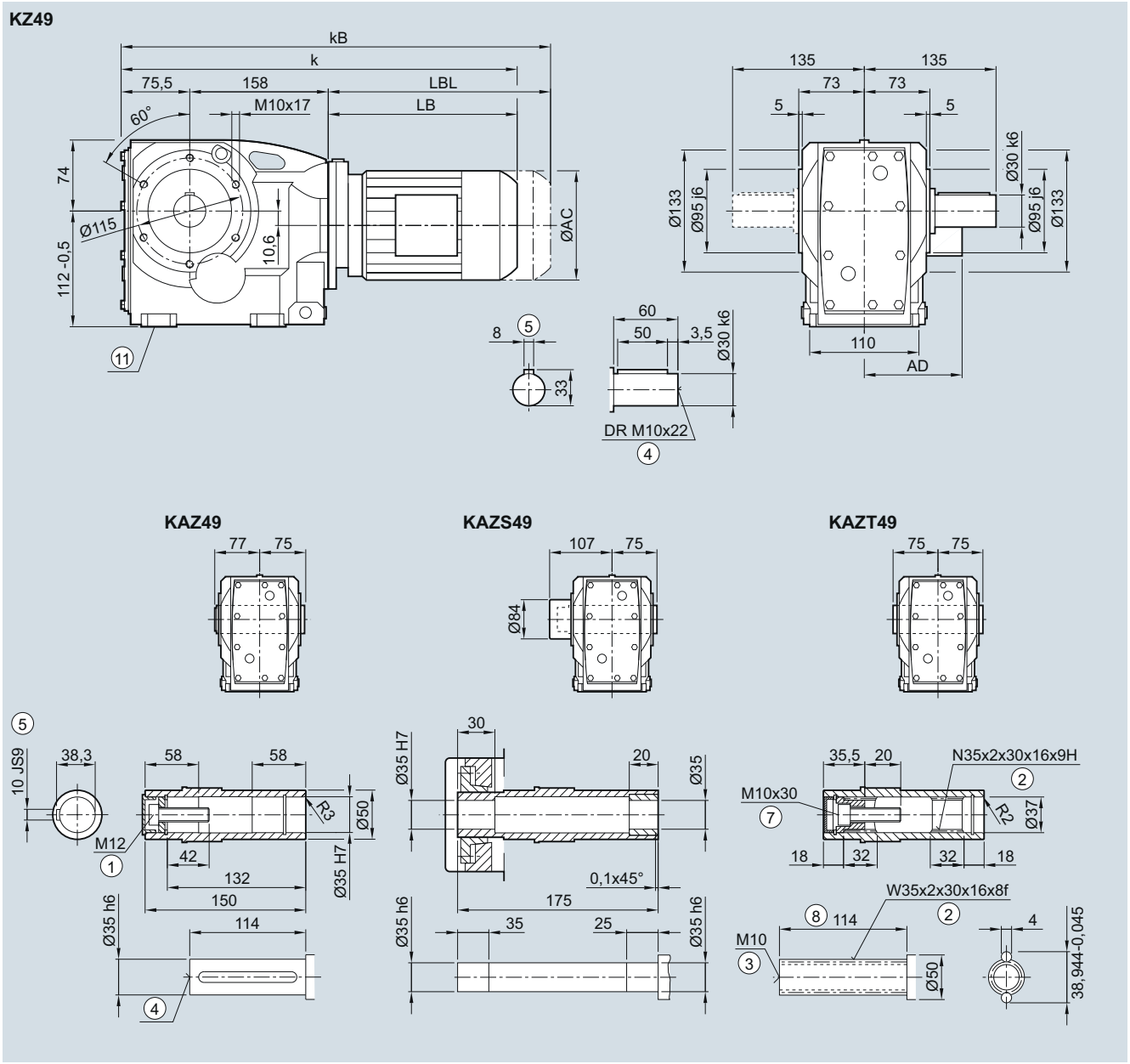

Motor	LA			LE									
	63	71	71Z	80	80Z	90	90Z	100	100Z	112	112Z	132	132Z
AC	117.8	138.8	138.8	156.3	156.3	173.8	173.8	198.0	198.0	222.0	222.0	264.0	264.0
AD[1)]	124.0	134.0	134.0	149.2	149.2	154.2	154.2	170.5	170.5	181.5	181.5	207.0	207.0
k	418.0	450.0	469.0	514.0	549.0	575.5	615.5	632.0	667.0	642.0	676.5	695.0	745.0
kB	462.5	505.0	524.0	574.0	609.0	645.5	685.5	710.5	745.5	715.0	749.5	799.5	849.5
LB	184.5	216.5	235.5	280.5	315.5	342.0	382.0	398.5	433.5	408.5	443.0	461.5	511.5
LBL	229.0	271.5	290.5	340.5	375.5	412.0	452.0	477.0	512.0	481.5	516.0	566.0	616.0

① ISO 4014 ② DIN 5480 ③ DIN 332-D ④ DIN 332 ⑤ Feather key/keyway DIN 6885-1 ⑦ ISO 4762 ⑧ Without locating shoulder +1 mm
⑪ Use bores only for foot-mounted design

1) AD depends on the motor options, for other dimensions see page 8/36.

© Siemens AG 2017

KAD.49 gearbox in a shaft-mounted design

KAD031, KADS031, KADT031

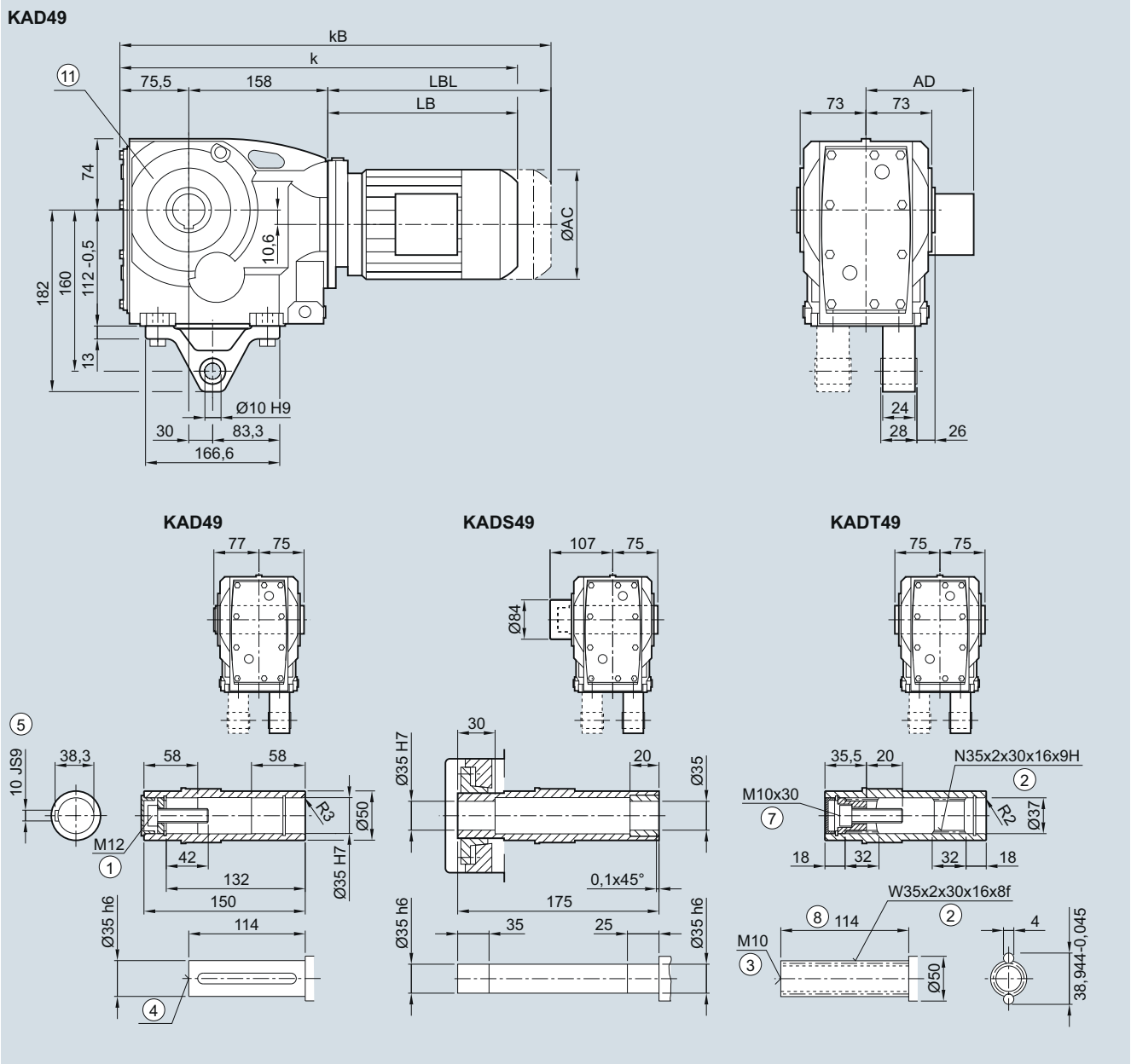

Motor	LA			LE									
	63	71	71Z	80	80Z	90	90Z	100	100Z	112	112Z	132	132Z
AC	117.8	138.8	138.8	156.3	156.3	173.8	173.8	198.0	198.0	222.0	222.0	264.0	264.0
AD[1)]	124.0	134.0	134.0	149.2	149.2	154.2	154.2	170.5	170.5	181.5	181.5	207.0	207.0
k	418.0	450.0	469.0	514.0	549.0	575.5	615.5	632.0	667.0	642.0	676.5	695.0	745.0
kB	462.5	505.0	524.0	574.0	609.0	645.5	685.5	710.5	745.5	715.0	749.5	799.5	849.5
LB	184.5	216.5	235.5	280.5	315.5	342.0	382.0	398.5	433.5	408.5	443.0	461.5	511.5
LBL	229.0	271.5	290.5	340.5	375.5	412.0	452.0	477.0	512.0	481.5	516.0	566.0	616.0

① ISO 4014 ② DIN 5480 ③ DIN 332-D ④ DIN 332 ⑤ Feather key/keyway DIN 6885-1 ⑦ ISO 4762 ⑧ Without locating shoulder +1 mm
⑪ Use bores only for housing flange design

[1)] AD depends on the motor options, for other dimensions see page 8/36.

© Siemens AG 2017

K..69 gearbox in a foot-mounted design

K030, KA030, KAS030, KAT030

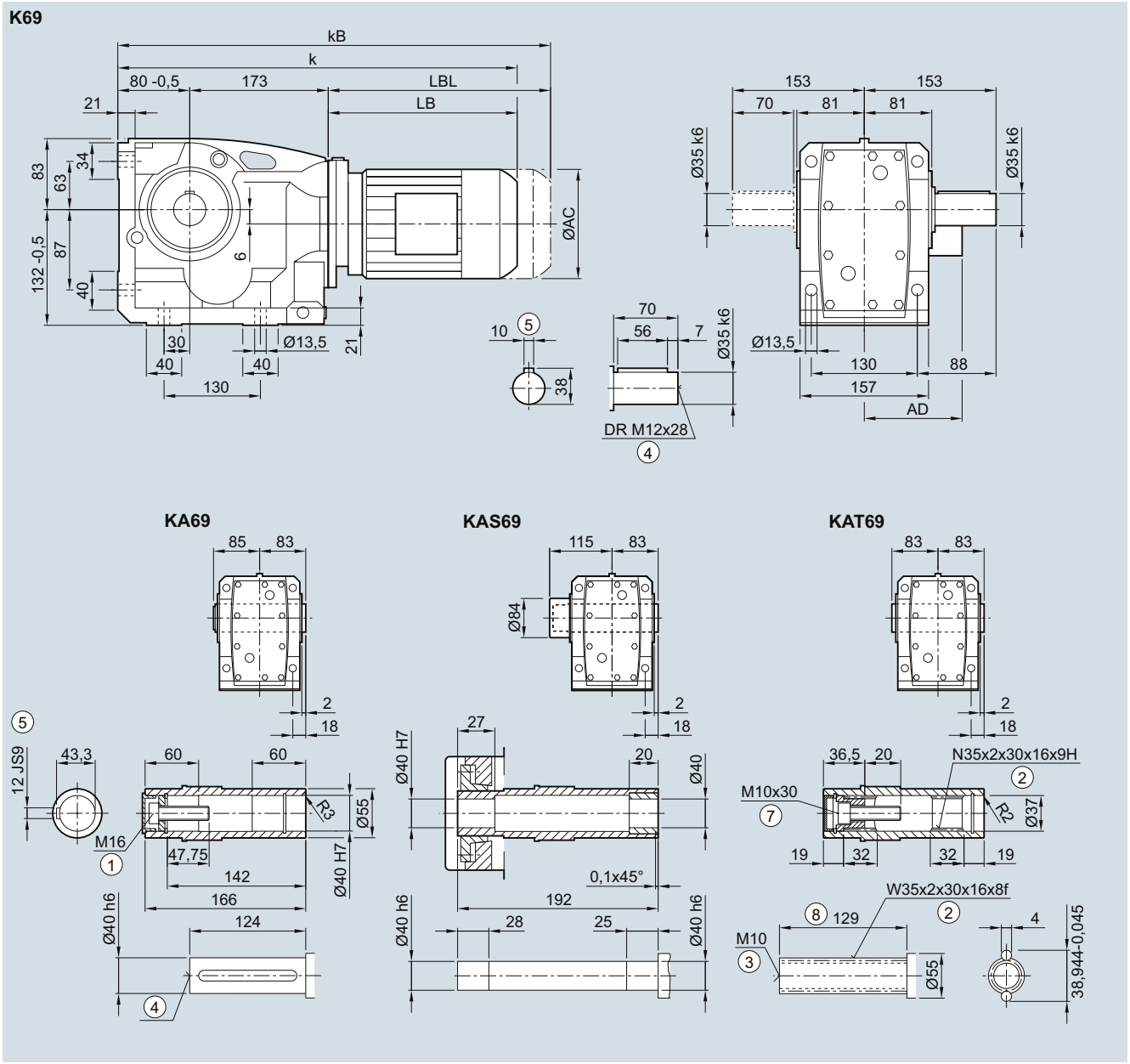

Motor	LA			LE									
	63	71	71Z	80	80Z	90	90Z	100	100Z	112	112Z	132	132Z
AC	117.8	138.8	138.8	156.3	156.3	173.8	173.8	198.0	198.0	222.0	222.0	264.0	264.0
AD[1)]	124.0	134.0	134.0	149.2	149.2	154.2	154.2	170.5	170.5	181.5	181.5	207.0	207.0
k	437.5	469.5	488.5	533.5	568.5	595.0	635.0	651.5	686.5	661.5	696.0	714.5	764.5
kB	482.0	524.5	543.5	593.5	628.5	665.0	705.0	730.0	765.0	734.5	769.0	819.0	869.0
LB	184.5	216.5	235.5	280.5	315.5	342.0	382.0	398.5	433.5	408.5	443.0	461.5	511.5
LBL	229.0	271.5	290.5	340.5	375.5	412.0	452.0	477.0	512.0	481.5	516.0	566.0	616.0

① ISO 4014 ② DIN 5480 ③ DIN 332-D ④ DIN 332 ⑤ Feather key/keyway DIN 6885-1 ⑦ ISO 4762 ⑧ Without locating shoulder +1 mm

1) AD depends on the motor options, for other dimensions see page 8/36.

© Siemens AG 2017

5

K.F.69 gearbox in a flange-mounted design

KF030, KAF030, KAFS030, KAFT030

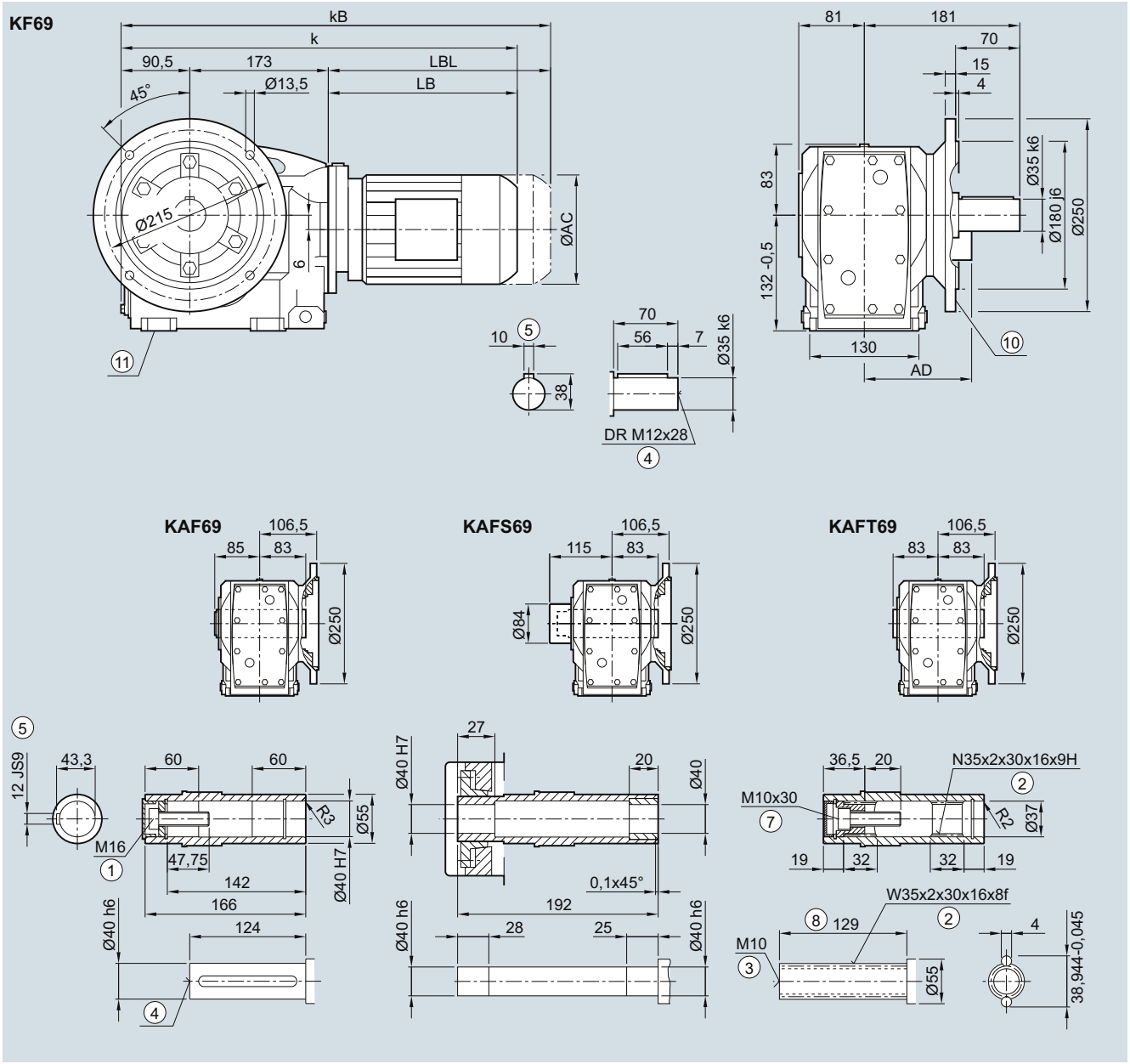

Motor	LA 63	71	71Z	LE 80	80Z	90	90Z	100	100Z	112	112Z	132	132Z
AC	117.8	138.8	138.8	156.3	156.3	173.8	173.8	198.0	198.0	222.0	222.0	264.0	264.0
AD[1)]	124.0	134.0	134.0	149.2	149.2	154.2	154.2	170.5	170.5	181.5	181.5	207.0	207.0
k	448.0	480.0	499.0	544.0	579.0	605.5	645.5	662.0	697.0	672.0	706.5	725.0	775.0
kB	492.5	535.0	554.0	604.0	639.0	675.5	715.5	740.5	775.5	745.0	779.5	829.5	879.5
LB	184.5	216.5	235.5	280.5	315.5	342.0	382.0	398.5	433.5	408.5	443.0	461.5	511.5
LBL	229.0	271.5	290.5	340.5	375.5	412.0	452.0	477.0	512.0	481.5	516.0	566.0	616.0

① ISO 4014 ② DIN 5480 ③ DIN 332-D ④ DIN 332 ⑤ Feather key/keyway DIN 6885-1 ⑦ ISO 4762 ⑧ Without locating shoulder +1 mm
⑩ For inner contour see page 5/136 ⑪ Use bores only for foot-mounted design
1) AD depends on the motor options, for other dimensions see page 8/36.

© Siemens AG 2017

K.Z.69 gearbox in a housing flange design

KZ030, KAZ030, KAZS030, KAZT030

KZ69

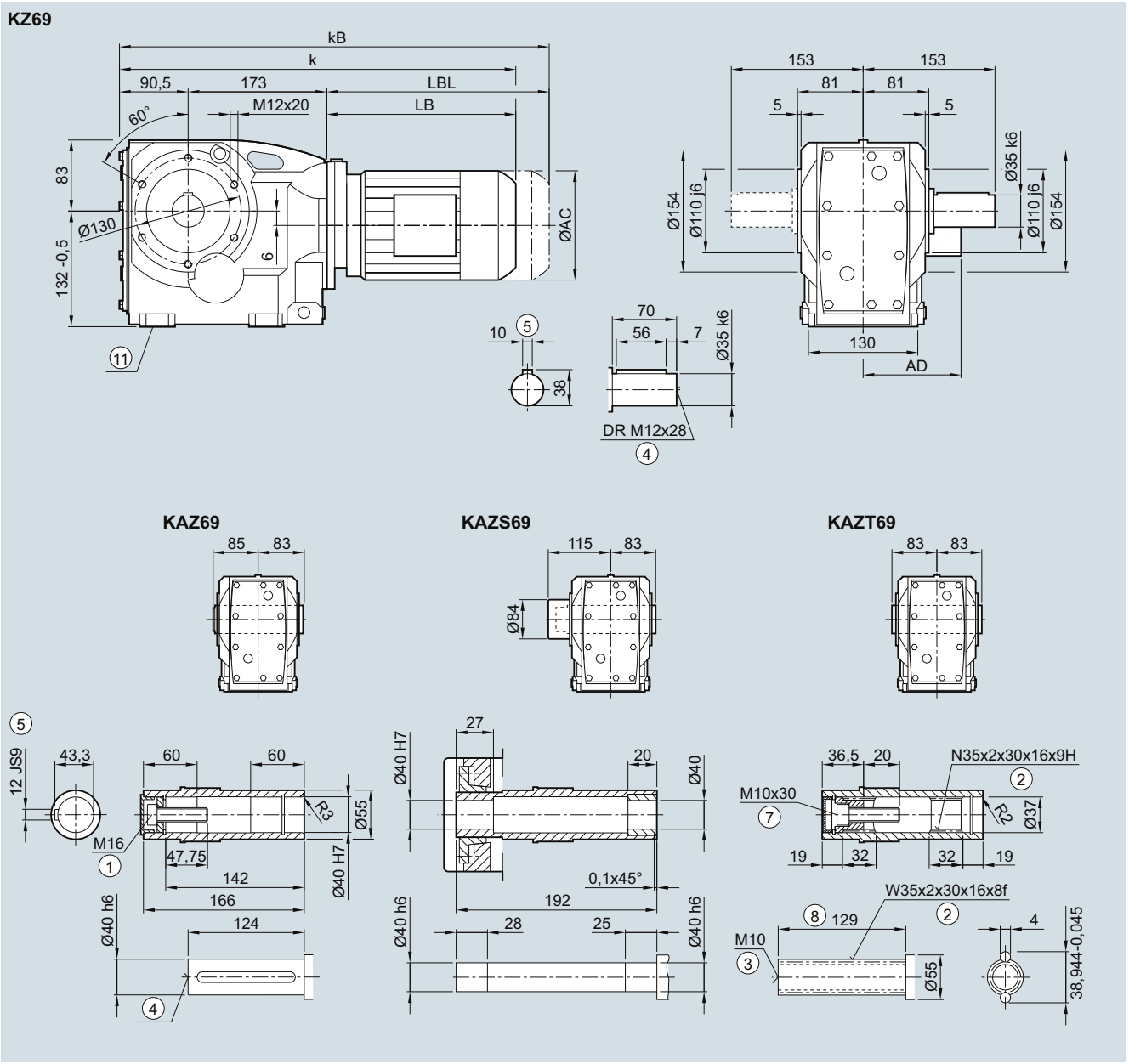

Motor	LA			LE									
	63	71	71Z	80	80Z	90	90Z	100	100Z	112	112Z	132	132Z
AC	117.8	138.8	138.8	156.3	156.3	173.8	173.8	198.0	198.0	222.0	222.0	264.0	264.0
AD[1)]	124.0	134.0	134.0	149.2	149.2	154.2	154.2	170.5	170.5	181.5	181.5	207.0	207.0
k	448.0	480.0	499.0	544.0	579.0	605.5	645.5	662.0	697.0	672.0	706.5	725.0	775.0
kB	492.5	535.0	554.0	604.0	639.0	675.5	715.5	740.5	775.5	745.0	779.5	829.5	879.5
LB	184.5	216.5	235.5	280.5	315.5	342.0	382.0	398.5	433.5	408.5	443.0	461.5	511.5
LBL	229.0	271.5	290.5	340.5	375.5	412.0	452.0	477.0	512.0	481.5	516.0	566.0	616.0

① ISO 4014 ② DIN 5480 ③ DIN 332-D ④ DIN 332 ⑤ Feather key/keyway DIN 6885-1 ⑦ ISO 4762 ⑧ Without locating shoulder +1 mm
⑪ Use bores only for foot-mounted design

1) AD depends on the motor options, for other dimensions see page 8/36.

© Siemens AG 2017

KAD.69 gearbox in a shaft-mounted design

KAD030, KADS030, KADT030

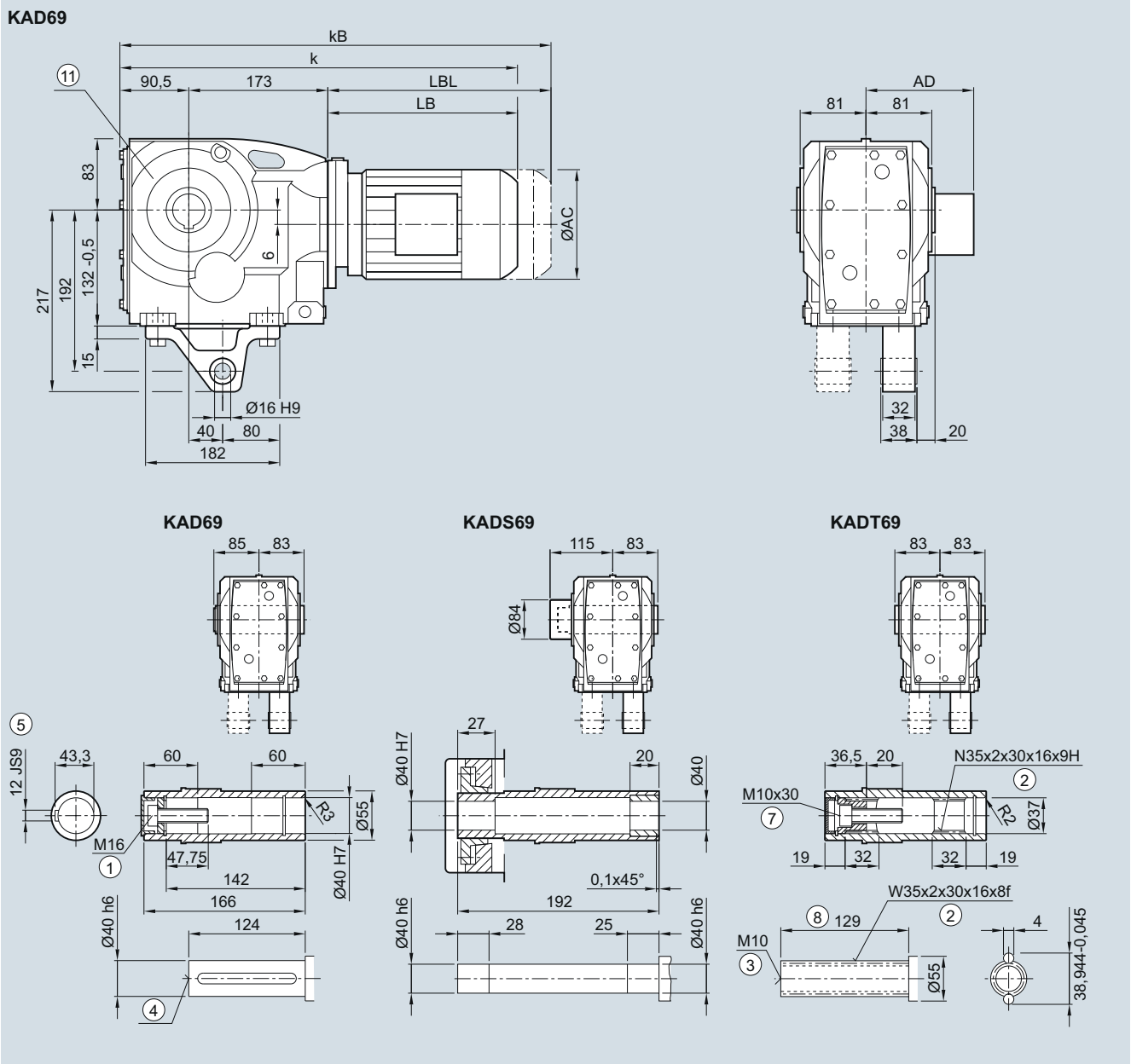

Motor	LA			LE									
	63	71	71Z	80	80Z	90	90Z	100	100Z	112	112Z	132	132Z
AC	117.8	138.8	138.8	156.3	156.3	173.8	173.8	198.0	198.0	222.0	222.0	264.0	264.0
AD[1)]	124.0	134.0	134.0	149.2	149.2	154.2	154.2	170.5	170.5	181.5	181.5	207.0	207.0
k	448.0	480.0	499.0	544.0	579.0	605.5	645.5	662.0	697.0	672.0	706.5	725.0	775.0
kB	492.5	535.0	554.0	604.0	639.0	675.5	715.5	740.5	775.5	745.0	779.5	829.5	879.5
LB	184.5	216.5	235.5	280.5	315.5	342.0	382.0	398.5	433.5	408.5	443.0	461.5	511.5
LBL	229.0	271.5	290.5	340.5	375.5	412.0	452.0	477.0	512.0	481.5	516.0	566.0	616.0

① ISO 4014 ② DIN 5480 ③ DIN 332-D ④ DIN 332 ⑤ Feather key/keyway DIN 6885-1 ⑦ ISO 4762 ⑧ Without locating shoulder +1 mm
⑪ Use bores only for housing flange design

[1)] AD depends on the motor options, for other dimensions see page 8/36.

© Siemens AG 2017

K..79 gearbox in a foot-mounted design

K030, KA030, KAS030, KAT030

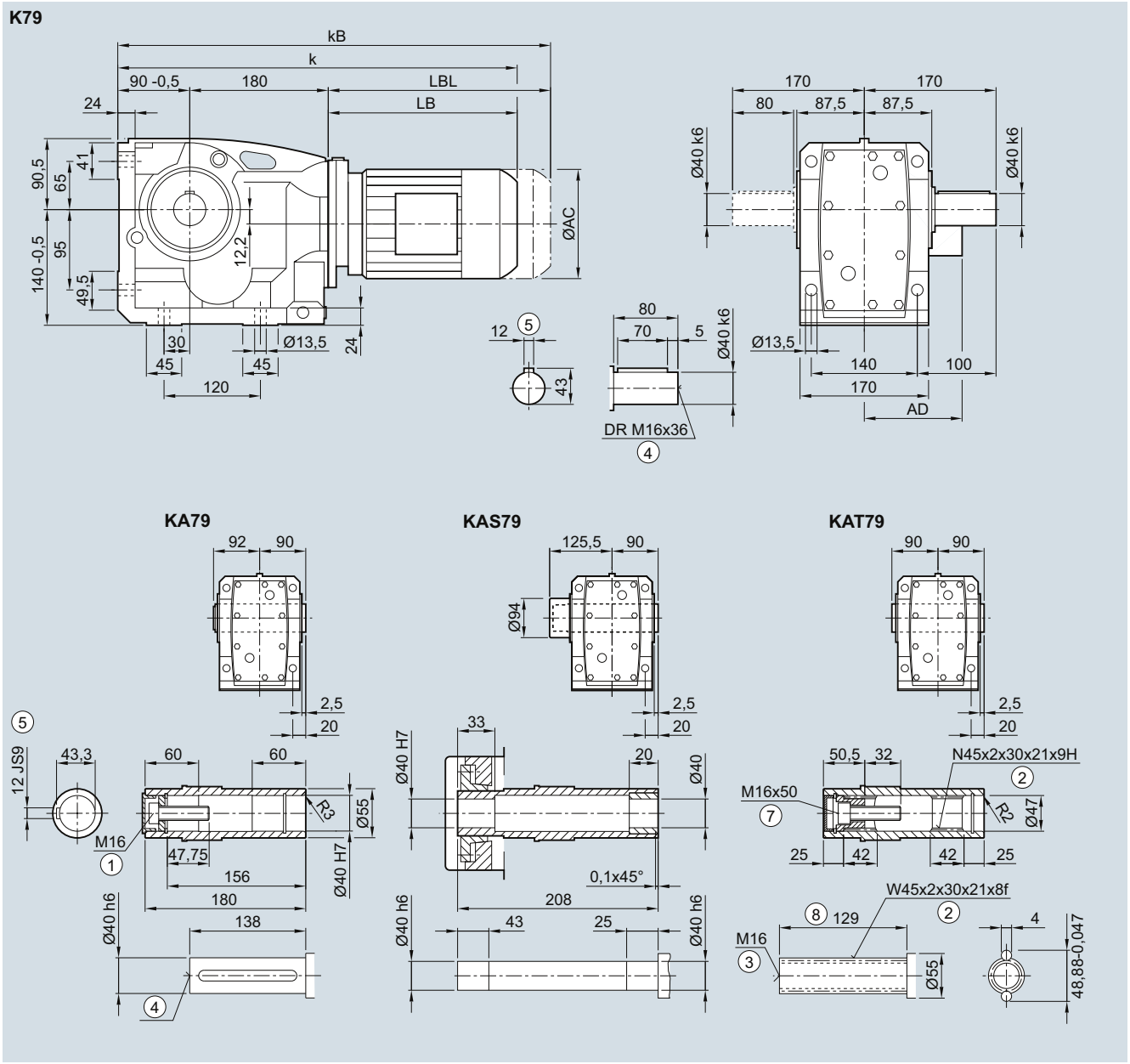

Motor	LA			LE									
	63	71	71Z	80	80Z	90	90Z	100	100Z	112	112Z	132	132Z
AC	117.8	138.8	138.8	156.3	156.3	173.8	173.8	198.0	198.0	222.0	222.0	264.0	264.0
AD[1)]	124.0	134.0	134.0	149.2	149.2	154.2	154.2	170.5	170.5	181.5	181.5	207.0	207.0
k	454.5	486.5	505.5	550.5	585.5	612.0	652.0	668.5	703.5	678.5	713.0	731.5	781.5
kB	499.0	541.5	560.5	610.5	645.5	682.0	722.0	747.0	782.0	751.5	786.0	836.0	886.0
LB	184.5	216.5	235.5	280.5	315.5	342.0	382.0	398.5	433.5	408.5	443.0	461.5	511.5
LBL	229.0	271.5	290.5	340.5	375.5	412.0	452.0	477.0	512.0	481.5	516.0	566.0	616.0

① ISO 4014 ② DIN 5480 ③ DIN 332-D ④ DIN 332 ⑤ Feather key/keyway DIN 6885-1 ⑦ ISO 4762 ⑧ Without locating shoulder +1 mm

[1)] AD depends on the motor options, for other dimensions see page 8/36.

© Siemens AG 2017

5

K.F.79 gearbox in a flange-mounted design

KF030, KAF030, KAFS030, KAFT030

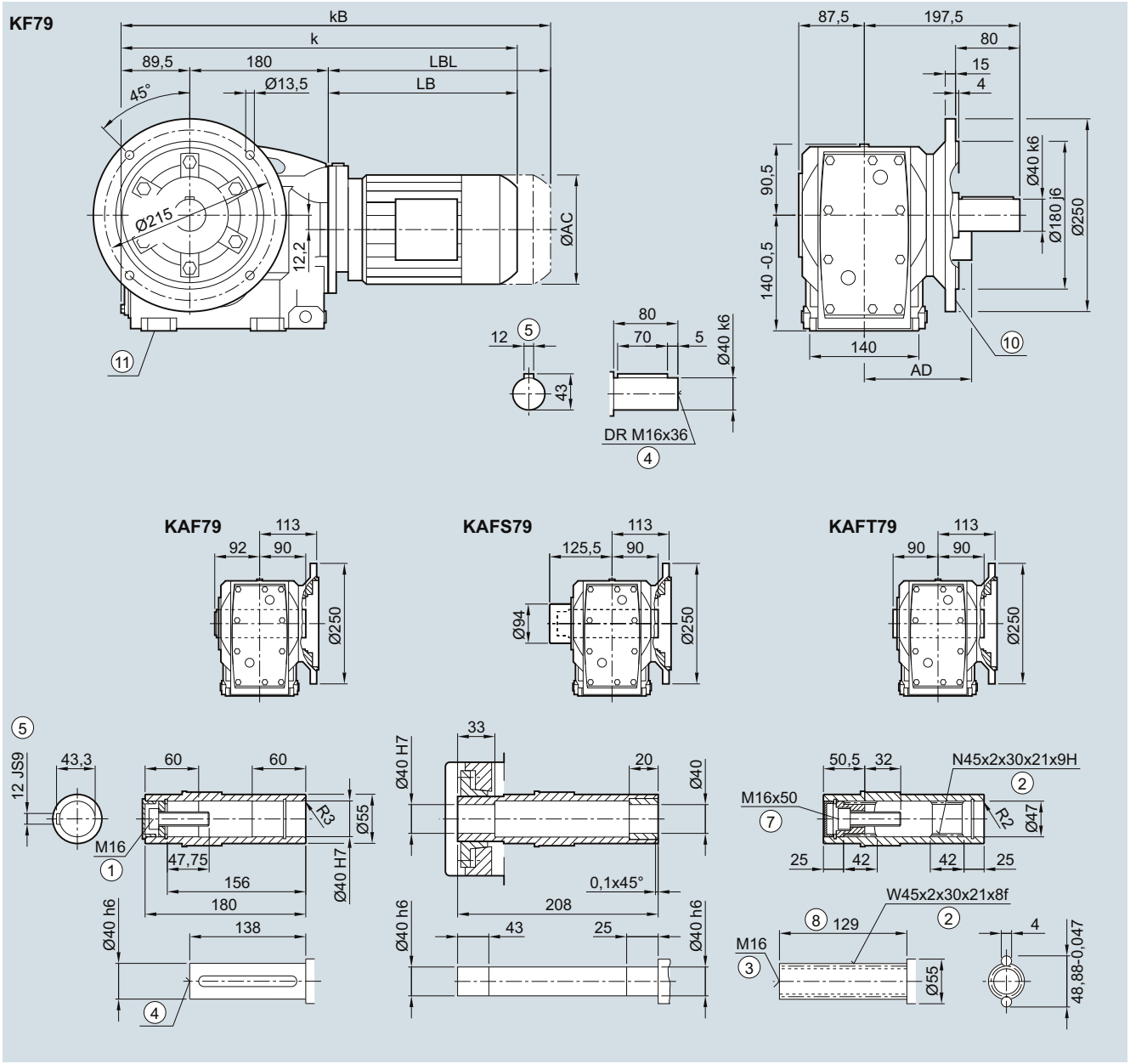

Motor	LA 63	71	71Z	LE 80	80Z	90	90Z	100	100Z	112	112Z	132	132Z
AC	117.8	138.8	138.8	156.3	156.3	173.8	173.8	198.0	198.0	222.0	222.0	264.0	264.0
AD[1)]	124.0	134.0	134.0	149.2	149.2	154.2	154.2	170.5	170.5	181.5	181.5	207.0	207.0
k	454.0	486.0	505.0	550.0	585.0	611.5	651.5	668.0	703.0	678.5	712.5	731.0	781.0
kB	498.5	541.0	560.0	610.0	645.0	681.5	721.5	746.5	781.5	751.0	785.5	835.5	885.5
LB	184.5	216.5	235.5	280.5	315.5	342.0	382.0	398.5	433.5	408.5	443.0	461.5	511.5
LBL	229.0	271.5	290.5	340.5	375.5	412.0	452.0	477.0	512.0	481.5	516.0	566.0	616.0

① ISO 4014 ② DIN 5480 ③ DIN 332-D ④ DIN 332 ⑤ Feather key/keyway DIN 6885-1 ⑦ ISO 4762 ⑧ Without locating shoulder +1 mm
⑩ For inner contour see page 5/136 ⑪ Use bores only for foot-mounted design
1) AD depends on the motor options, for other dimensions see page 8/36.

© Siemens AG 2017

K.Z.79 gearbox in a housing flange design

KZ030, KAZ030, KAZS030, KAZT030

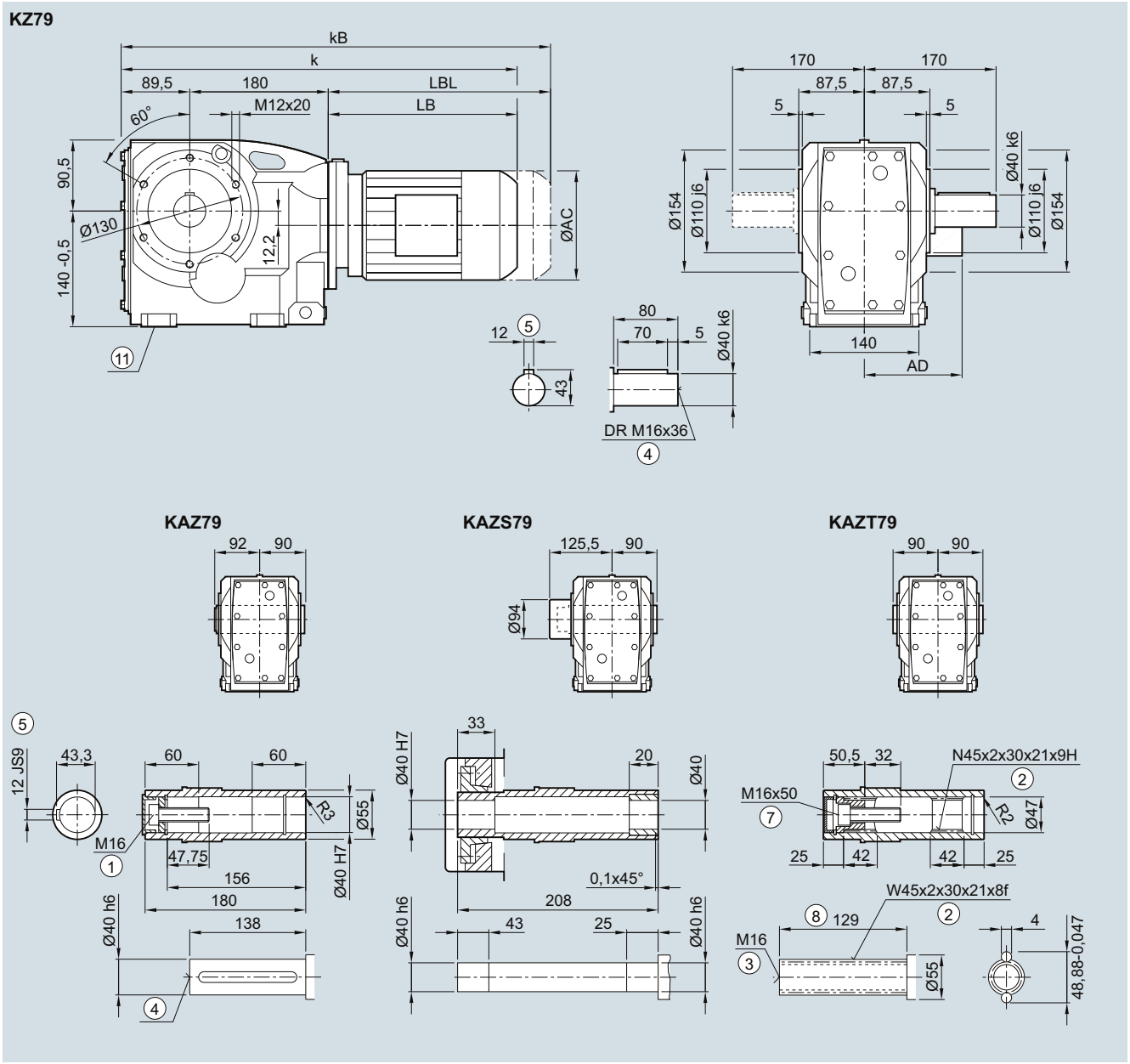

Motor	LA			LE									
	63	71	71Z	80	80Z	90	90Z	100	100Z	112	112Z	132	132Z
AC	117.8	138.8	138.8	156.3	156.3	173.8	173.8	198.0	198.0	222.0	222.0	264.0	264.0
AD[1)]	124.0	134.0	134.0	149.2	149.2	154.2	154.2	170.5	170.5	181.5	181.5	207.0	207.0
k	454.0	486.0	505.0	550.0	585.0	611.5	651.5	668.0	703.0	678.5	712.5	731.0	781.0
kB	498.5	541.0	560.0	610.0	645.0	681.5	721.5	746.5	781.5	751.0	785.5	835.5	885.5
LB	184.5	216.5	235.5	280.5	315.5	342.0	382.0	398.5	433.5	408.5	443.0	461.5	511.5
LBL	229.0	271.5	290.5	340.5	375.5	412.0	452.0	477.0	512.0	481.5	516.0	566.0	616.0

① ISO 4014 ② DIN 5480 ③ DIN 332-D ④ DIN 332 ⑤ Feather key/keyway DIN 6885-1 ⑦ ISO 4762 ⑧ Without locating shoulder +1 mm
⑪ Use bores only for foot-mounted design

1) AD depends on the motor options, for other dimensions see page 8/36.

© Siemens AG 2017

Dimensions

KAD.79 gearbox in a shaft-mounted design

KAD030, KADS030, KADT030

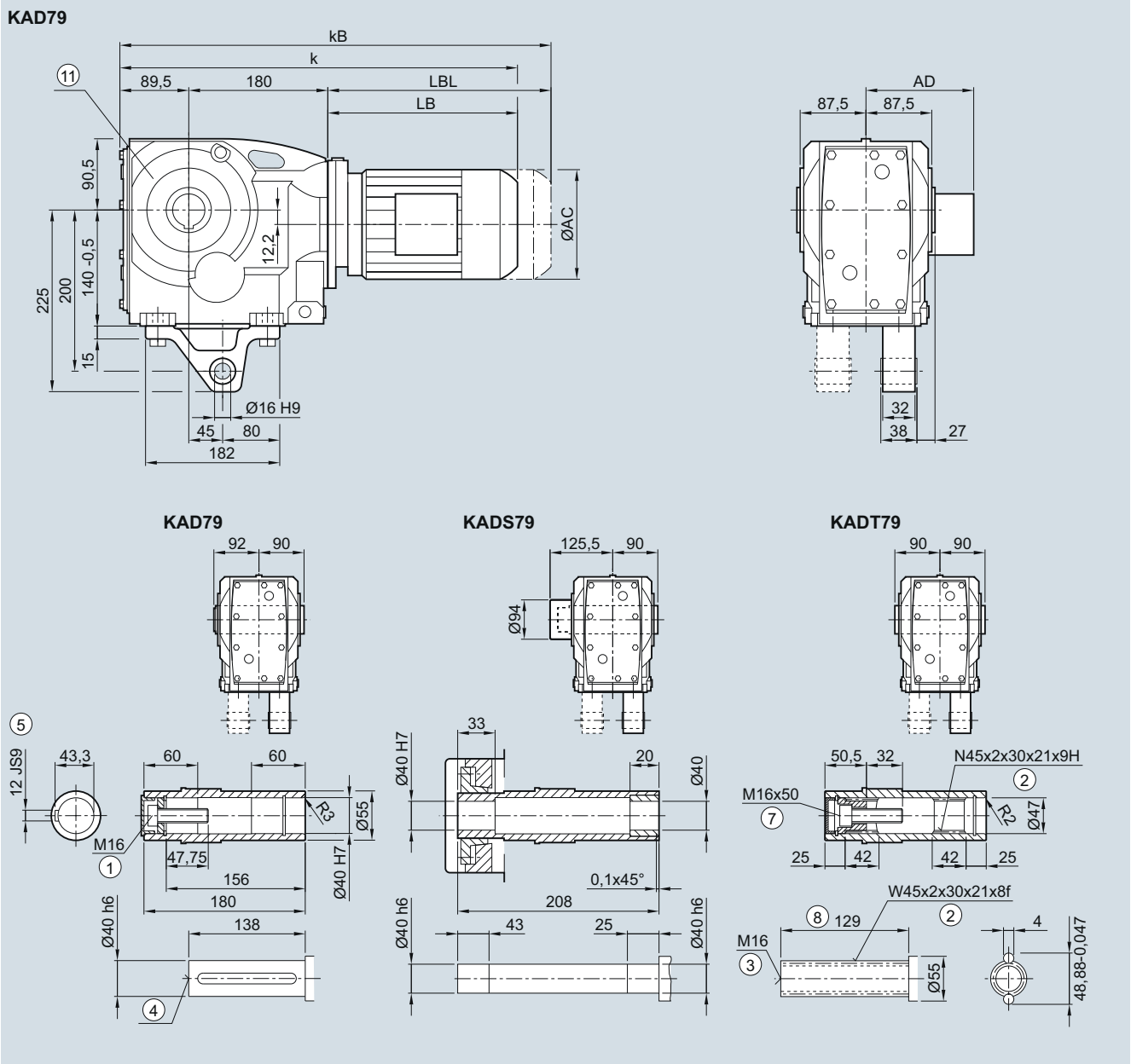

Motor	LA			LE									
	63	71	71Z	80	80Z	90	90Z	100	100Z	112	112Z	132	132Z
AC	117.8	138.8	138.8	156.3	156.3	173.8	173.8	198.0	198.0	222.0	222.0	264.0	264.0
AD[1)]	124.0	134.0	134.0	149.2	149.2	154.2	154.2	170.5	170.5	181.5	181.5	207.0	207.0
k	454.0	486.0	505.0	550.0	585.0	611.5	651.5	668.0	703.0	678.5	712.5	731.0	781.0
kB	498.5	541.0	560.0	610.0	645.0	681.5	721.5	746.5	781.5	751.0	785.5	835.5	885.5
LB	184.5	216.5	235.5	280.5	315.5	342.0	382.0	398.5	433.5	408.5	443.0	461.5	511.5
LBL	229.0	271.5	290.5	340.5	375.5	412.0	452.0	477.0	512.0	481.5	516.0	566.0	616.0

① ISO 4014 ② DIN 5480 ③ DIN 332-D ④ DIN 332 ⑤ Feather key/keyway DIN 6885-1 ⑦ ISO 4762 ⑧ Without locating shoulder +1 mm
⑪ Use bores only for housing flange design

1) AD depends on the motor options, for other dimensions see page 8/36.

© Siemens AG 2017

K..89 gearbox in a foot-mounted design

K030, KA030, KAS030, KAT030

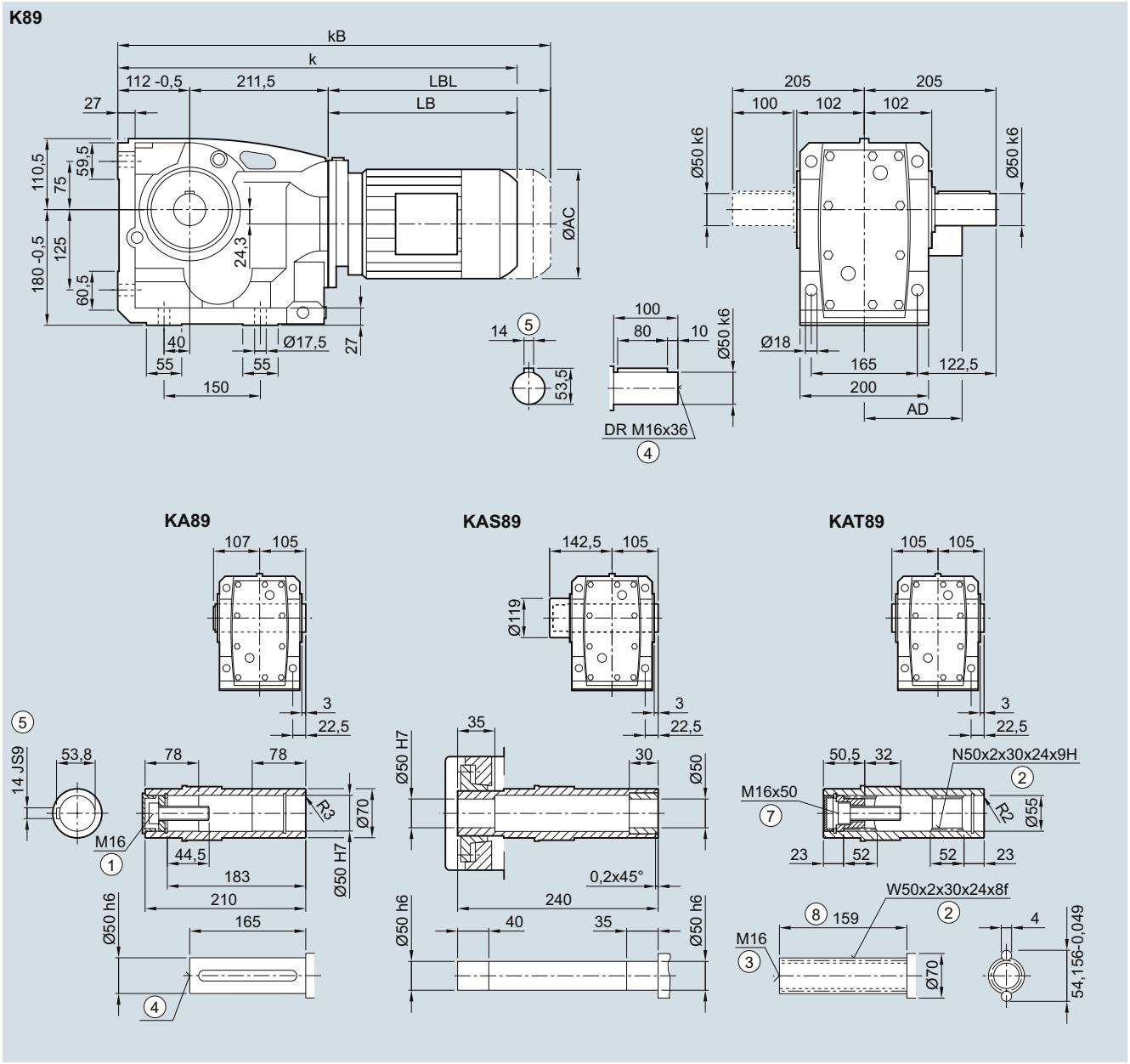

Motor	LA		LE											
	71	71Z	80	80Z	90	90Z	100	100Z	112	112Z	132	132Z	160	160Z
AC	138.8	138.8	156.3	156.3	173.8	173.8	198.0	198.0	222.0	222.0	264.0	264.0	318.0	318.0
AD[1)]	134.0	134.0	149.2	149.2	154.2	154.2	170.5	170.5	181.5	181.5	207.0	207.0	241.0	241.0
k	538.0	557.0	598.0	633.0	659.5	699.5	716.0	751.0	726.0	751.0	779.0	829.0	861.0	921.0
kB	593.0	612.0	658.0	693.0	729.5	769.5	794.5	829.5	799.0	824.0	883.5	933.5	977.0	1 037.0
LB	214.5	233.5	274.5	309.5	336.0	376.0	392.5	427.5	402.5	427.5	455.5	505.5	537.5	597.5
LBL	269.5	288.5	334.5	369.5	406.0	446.0	471.0	506.0	475.5	500.5	560.0	610.0	653.5	713.5

① ISO 4014 ② DIN 5480 ③ DIN 332-D ④ DIN 332 ⑤ Feather key/keyway DIN 6885-1 ⑦ ISO 4762 ⑧ Without locating shoulder +1 mm

1) AD depends on the motor options, for other dimensions see page 8/36.

© Siemens AG 2017

5

K.F.89 gearbox in a flange-mounted design

KF030, KAF030, KAFS030, KAFT030

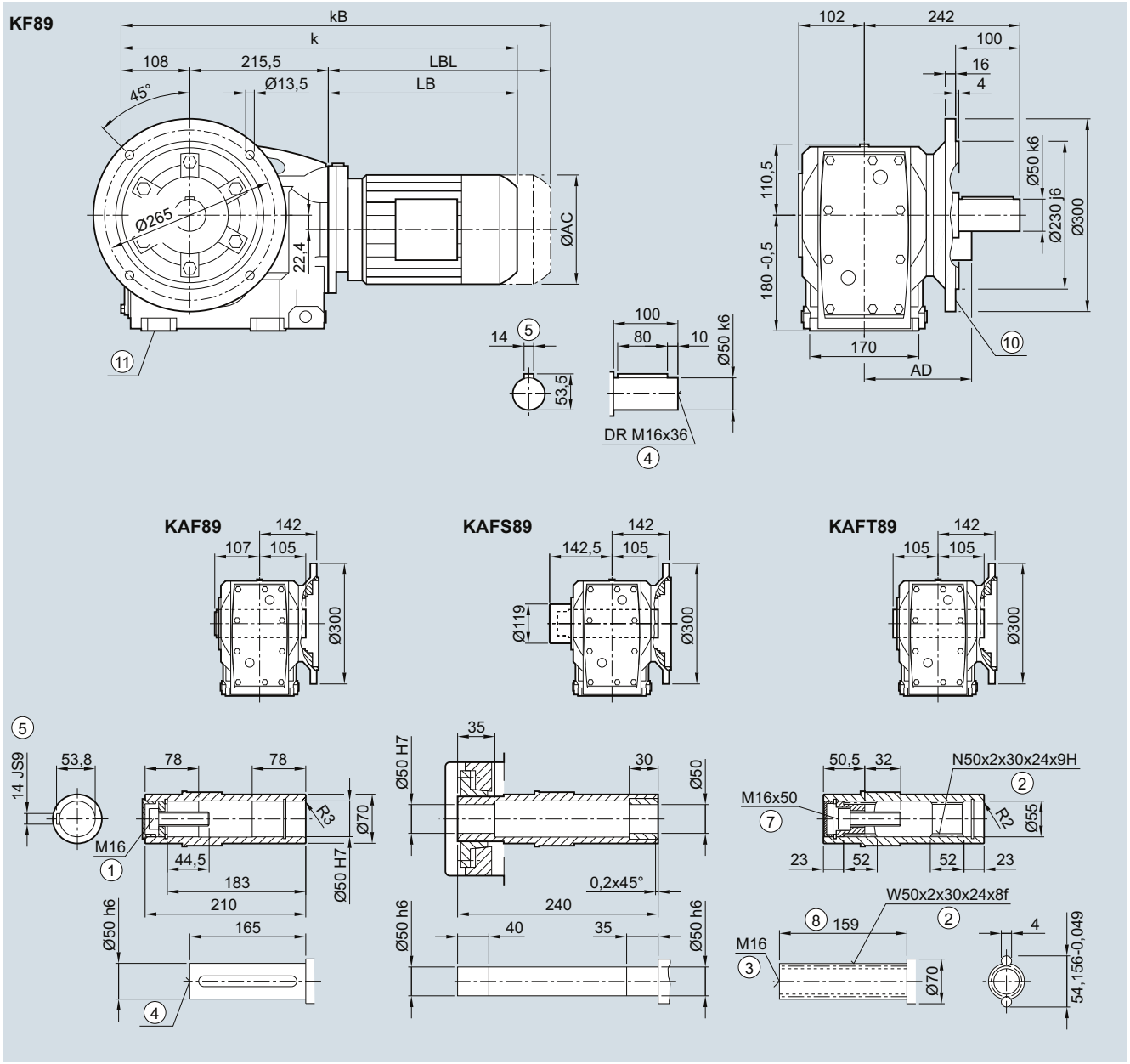

Motor	LA 71	71Z	LE 80	80Z	90	90Z	100	100Z	112	112Z	132	132Z	160	160Z
AC	138.8	138.8	156.3	156.3	173.8	173.8	198.0	198.0	222.0	222.0	264.0	264.0	318.0	318.0
AD[1)]	134.0	134.0	149.2	149.2	154.2	154.2	170.5	170.5	181.5	181.5	207.0	207.0	241.0	241.0
k	538.0	557.0	598.0	633.0	659.5	699.5	716.0	751.0	726.0	751.0	779.0	829.0	861.0	921.0
kB	593.0	612.0	658.0	693.0	729.5	769.5	794.5	829.5	799.0	824.0	883.5	933.5	977.0	1 037.0
LB	214.5	233.5	274.5	309.5	336.0	376.0	392.5	427.5	402.5	427.5	455.5	505.5	537.5	597.5
LBL	269.5	288.5	334.5	369.5	406.0	446.0	471.0	506.0	475.5	500.5	560.0	610.0	653.5	713.5

① ISO 4014 ② DIN 5480 ③ DIN 332-D ④ DIN 332 ⑤ Feather key/keyway DIN 6885-1 ⑦ ISO 4762 ⑧ Without locating shoulder +1 mm
⑩ For inner contour see page 5/136 ⑪ Use bores only for foot-mounted design
1) AD depends on the motor options, for other dimensions see page 8/36.

© Siemens AG 2017

K.Z.89 gearbox in a housing flange design

KZ030, KAZ030, KAZS030, KAZT030

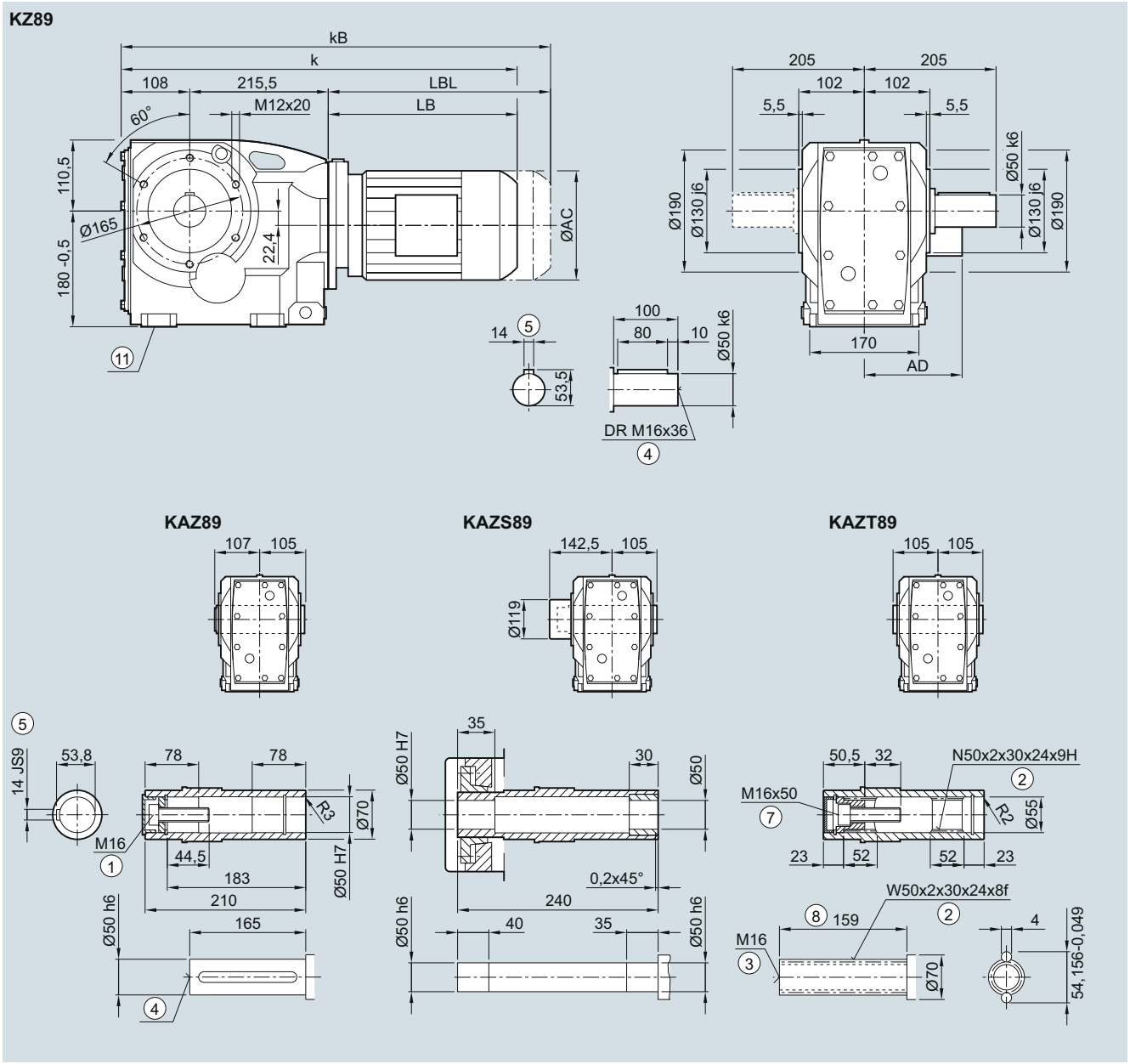

Motor	LA 71	71Z	LE 80	80Z	90	90Z	100	100Z	112	112Z	132	132Z	160	160Z
AC	138.8	138.8	156.3	156.3	173.8	173.8	198.0	198.0	222.0	222.0	264.0	264.0	318.0	318.0
AD[1)]	134.0	134.0	149.2	149.2	154.2	154.2	170.5	170.5	181.5	181.5	207.0	207.0	241.0	241.0
k	538.0	557.0	598.0	633.0	659.5	699.5	716.0	751.0	726.0	751.0	779.0	829.0	861.0	921.0
kB	593.0	612.0	658.0	693.0	729.5	769.5	794.5	829.5	799.0	824.0	883.5	933.5	977.0	1 037.0
LB	214.5	233.5	274.5	309.5	336.0	376.0	392.5	427.5	402.5	427.5	455.5	505.5	537.5	597.5
LBL	269.5	288.5	334.5	369.5	406.0	446.0	471.0	506.0	475.5	500.5	560.0	610.0	653.5	713.5

① ISO 4014 ② DIN 5480 ③ DIN 332-D ④ DIN 332 ⑤ Feather key/keyway DIN 6885-1 ⑦ ISO 4762 ⑧ Without locating shoulder +1 mm
⑪ Use bores only for foot-mounted design

1) AD depends on the motor options, for other dimensions see page 8/36.

© Siemens AG 2017

KAD.89 gearbox in a shaft-mounted design

KAD031, KADS031, KADT031

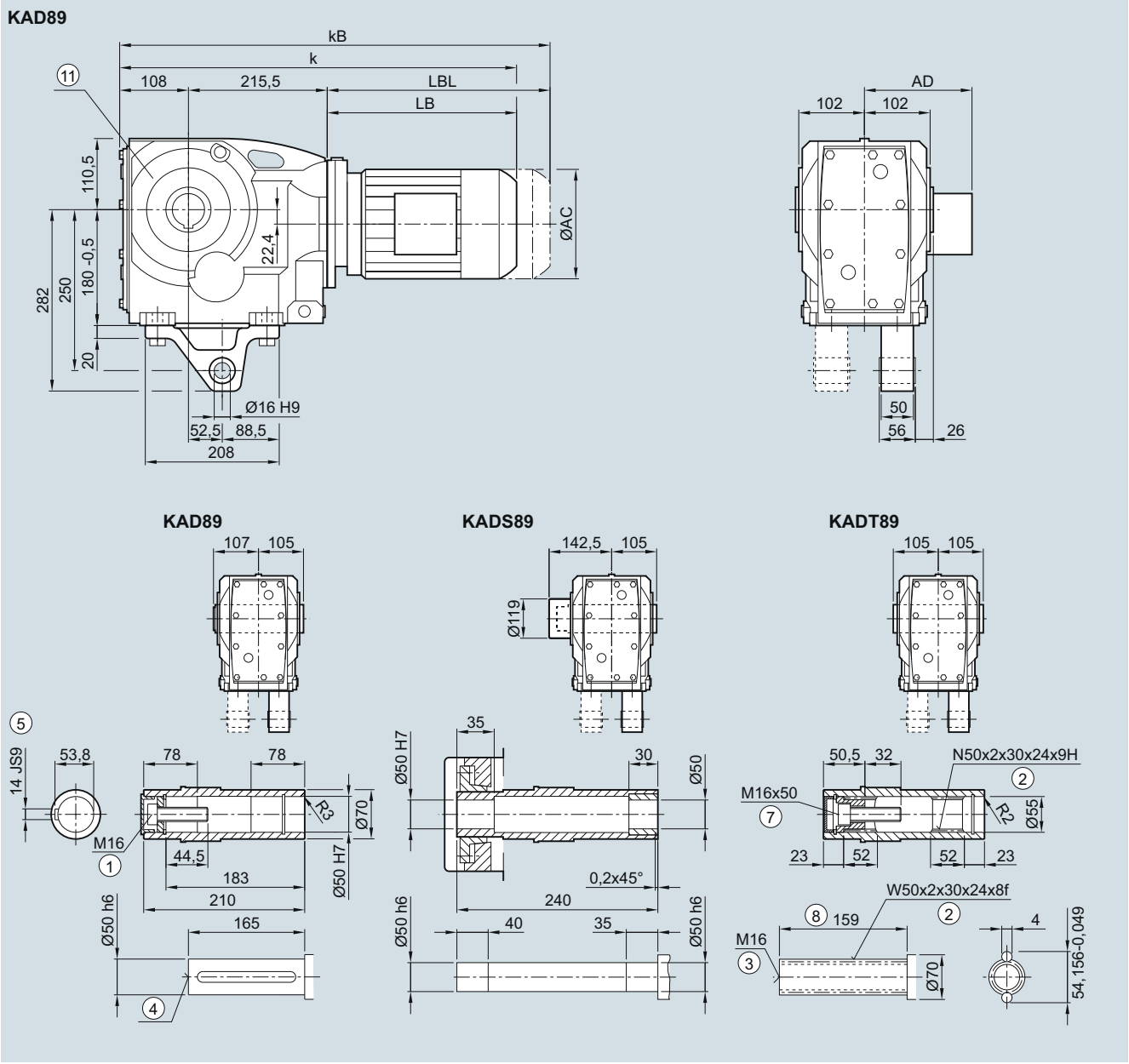

Motor	LA 71	71Z	LE 80	80Z	90	90Z	100	100Z	112	112Z	132	132Z	160	160Z
AC	138.8	138.8	156.3	156.3	173.8	173.8	198.0	198.0	222.0	222.0	264.0	264.0	318.0	318.0
AD[1)]	134.0	134.0	149.2	149.2	154.2	154.2	170.5	170.5	181.5	181.5	207.0	207.0	241.0	241.0
k	538.0	557.0	598.0	633.0	659.5	699.5	716.0	751.0	726.0	751.0	779.0	829.0	861.0	921.0
kB	593.0	612.0	658.0	693.0	729.5	769.5	794.5	829.5	799.0	824.0	883.5	933.5	977.0	1 037.0
LB	214.5	233.5	274.5	309.5	336.0	376.0	392.5	427.5	402.5	427.5	455.5	505.5	537.5	597.5
LBL	269.5	288.5	334.5	369.5	406.0	446.0	471.0	506.0	475.5	500.5	560.0	610.0	653.5	713.5

① ISO 4014 ② DIN 5480 ③ DIN 332-D ④ DIN 332 ⑤ Feather key/keyway DIN 6885-1 ⑦ ISO 4762 ⑧ Without locating shoulder +1 mm
⑪ Use bores only for housing flange design
1) AD depends on the motor options, for other dimensions see page 8/36.

© Siemens AG 2017

K..109 gearbox in a foot-mounted design

K030, KA030, KAS030, KAT030

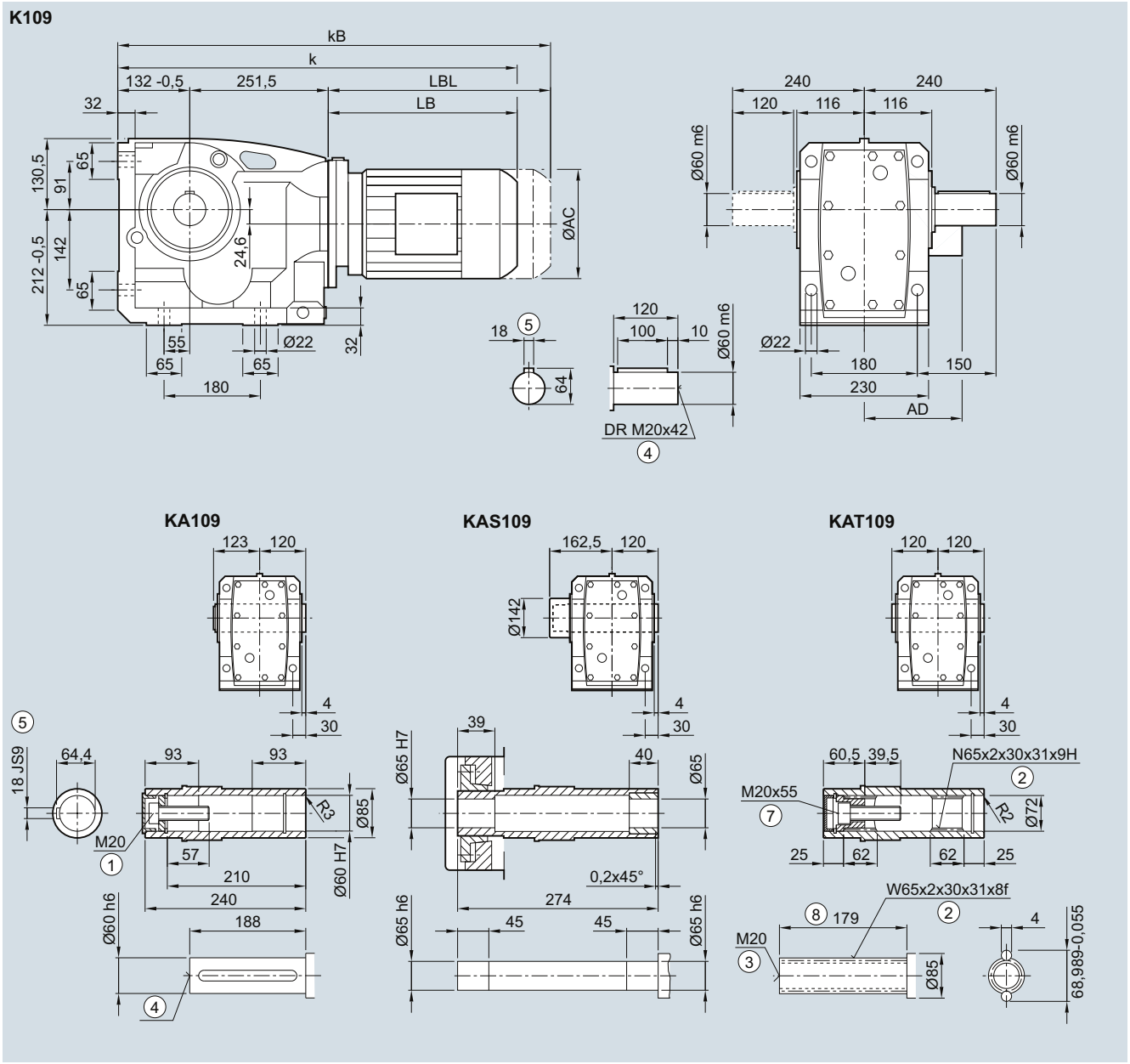

Motor	LE												LES	
	80	80Z	90	90Z	100	100Z	112	112Z	132	132Z	160	160Z	180	180Z
AC	156.3	156.3	173.8	173.8	198.0	198.0	222.0	222.0	264.0	264.0	318.0	318.0	352.5	352.5
AD[1)]	149.2	149.2	154.2	154.2	170.5	170.5	181.5	181.5	207.0	207.0	241.0	241.0	292.0	292.0
k	645.0	680.0	706.5	746.5	759.0	794.0	769.0	794.0	822.0	872.0	904.0	964.0	977.0	1 007.0
kB	705.0	740.0	776.5	816.5	837.5	872.5	842.0	867.0	926.5	976.5	1 020.0	1 080.0	1 106.0	1 136.0
LB	261.5	296.5	323.0	363.0	375.5	410.5	385.5	410.5	438.5	488.5	520.5	580.5	593.5	623.5
LBL	321.5	356.5	393.0	433.0	454.0	489.0	458.5	483.5	543.0	593.0	636.5	696.5	722.5	752.5

① ISO 4014 ② DIN 5480 ③ DIN 332-D ④ DIN 332 ⑤ Feather key/keyway DIN 6885-1 ⑦ ISO 4762 ⑧ Without locating shoulder +1 mm

[1)] AD depends on the motor options, for other dimensions see page 8/36.

© Siemens AG 2017

5

K.F.109 gearbox in a flange-mounted design

KF030, KAF030, KAFS030, KAFT030

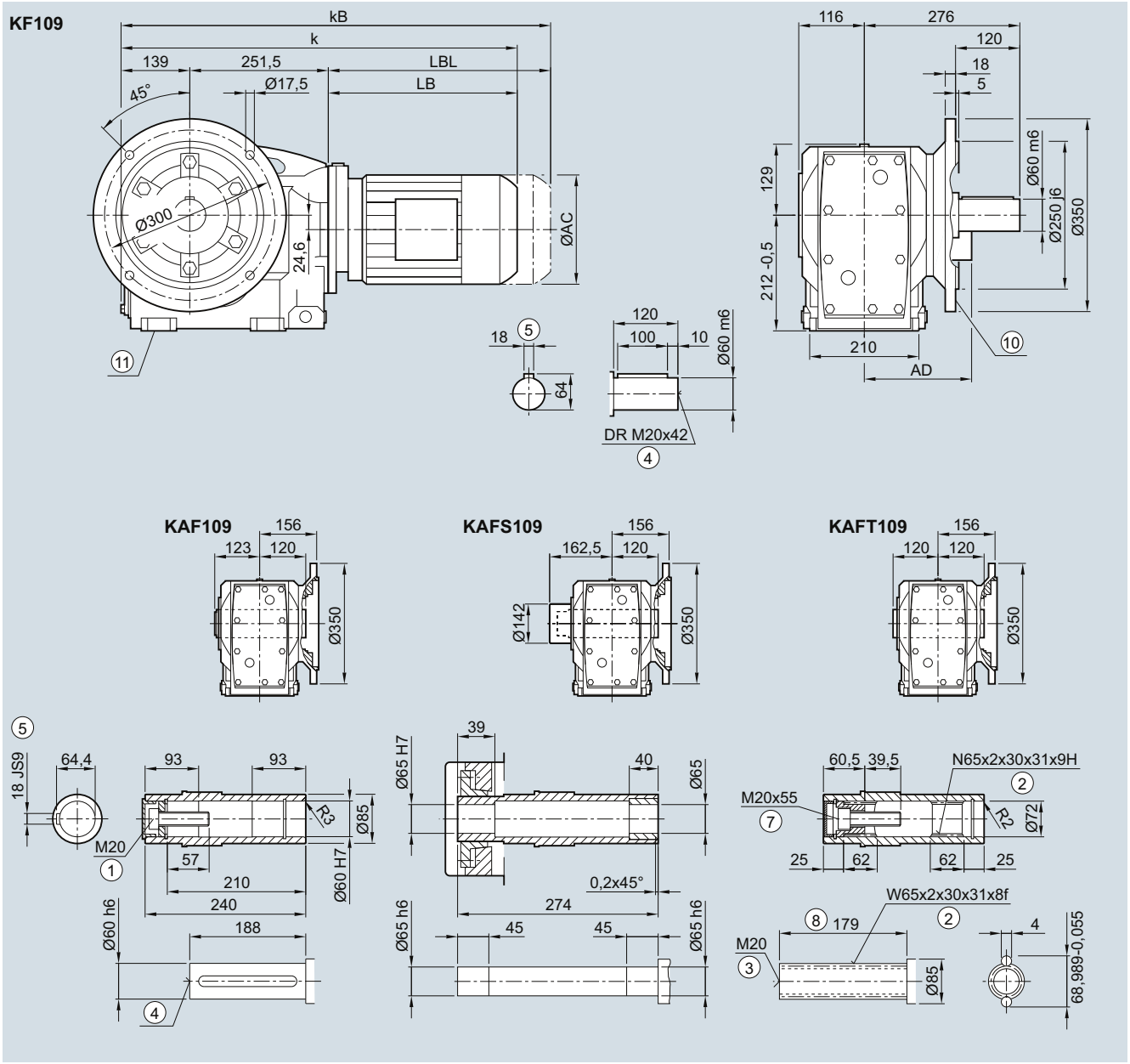

Motor	LE 80	80Z	90	90Z	100	100Z	112	112Z	132	132Z	160	160Z	LES 180	180Z
AC	156.3	156.3	173.8	173.8	198.0	198.0	222.0	222.0	264.0	264.0	318.0	318.0	352.5	352.5
AD[1)]	149.2	149.2	154.2	154.2	170.5	170.5	181.5	181.5	207.0	207.0	241.0	241.0	292.0	292.0
k	652.0	687.0	713.5	753.5	766.0	801.0	776.0	801.0	829.0	879.0	911.0	971.0	984.0	1 014.0
kB	712.0	747.0	783.5	823.5	844.5	879.5	849.0	874.0	933.5	983.5	1 027.0	1 087.0	1 113.0	1 143.0
LB	261.5	296.5	323.0	363.0	375.5	410.5	385.5	410.5	438.5	488.5	520.5	580.5	593.5	623.5
LBL	321.5	356.5	393.0	433.0	454.0	489.0	458.5	483.5	543.0	593.0	636.5	696.5	722.5	752.5

① ISO 4014 ② DIN 5480 ③ DIN 332-D ④ DIN 332 ⑤ Feather key/keyway DIN 6885-1 ⑦ ISO 4762 ⑧ Without locating shoulder +1 mm
⑩ For inner contour see page 5/136 ⑪ Use bores only for foot-mounted design
1) AD depends on the motor options, for other dimensions see page 8/36.

© Siemens AG 2017

K.Z.109 gearbox in a housing flange design

KZ030, KAZ030, KAZS030, KAZT030

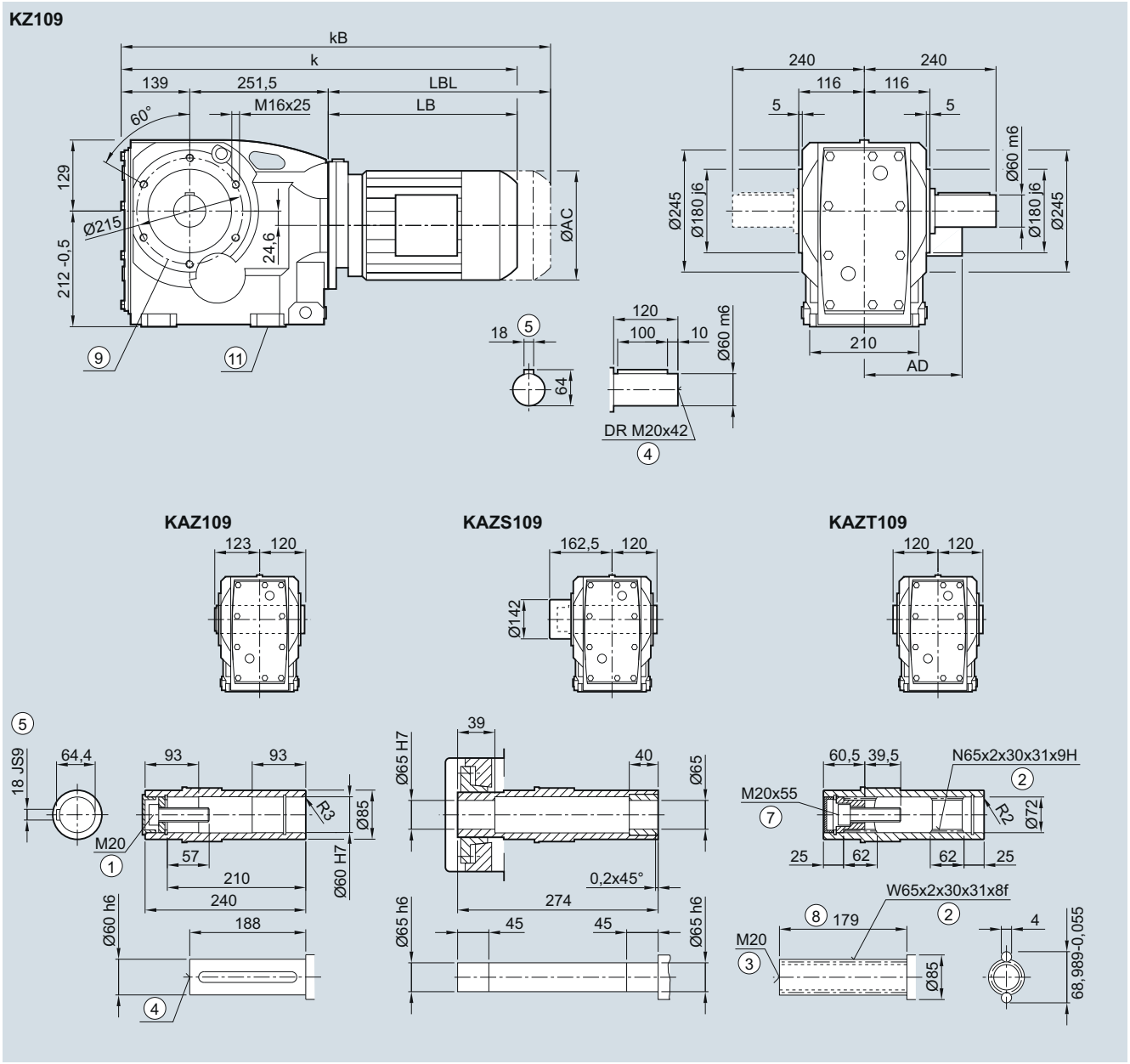

Motor	LE 80	80Z	90	90Z	100	100Z	112	112Z	132	132Z	160	160Z	LES 180	180Z
AC	156.3	156.3	173.8	173.8	198.0	198.0	222.0	222.0	264.0	264.0	318.0	318.0	352.5	352.5
AD[1)]	149.2	149.2	154.2	154.2	170.5	170.5	181.5	181.5	207.0	207.0	241.0	241.0	292.0	292.0
k	652.0	687.0	713.5	753.5	766.0	801.0	776.0	801.0	829.0	879.0	911.0	971.0	984.0	1 014.0
kB	712.0	747.0	783.5	823.5	844.5	879.5	849.0	874.0	933.5	983.5	1 027.0	1 087.0	1 113.0	1 143.0
LB	261.5	296.5	323.0	363.0	375.5	410.5	385.5	410.5	438.5	488.5	520.5	580.5	593.5	623.5
LBL	321.5	356.5	393.0	433.0	454.0	489.0	458.5	483.5	543.0	593.0	636.5	696.5	722.5	752.5

① ISO 4014 ② DIN 5480 ③ DIN 332-D ④ DIN 332 ⑤ Feather key/keyway DIN 6885-1 ⑦ ISO 4762 ⑧ Without locating shoulder +1 mm
⑨ For pin holes see page 5/137 ⑪ Use bores only for foot-mounted design
1) AD depends on the motor options, for other dimensions see page 8/36.

© Siemens AG 2017

5

KAD.109 gearbox in a shaft-mounted design

KAD030, KADS030, KADT030

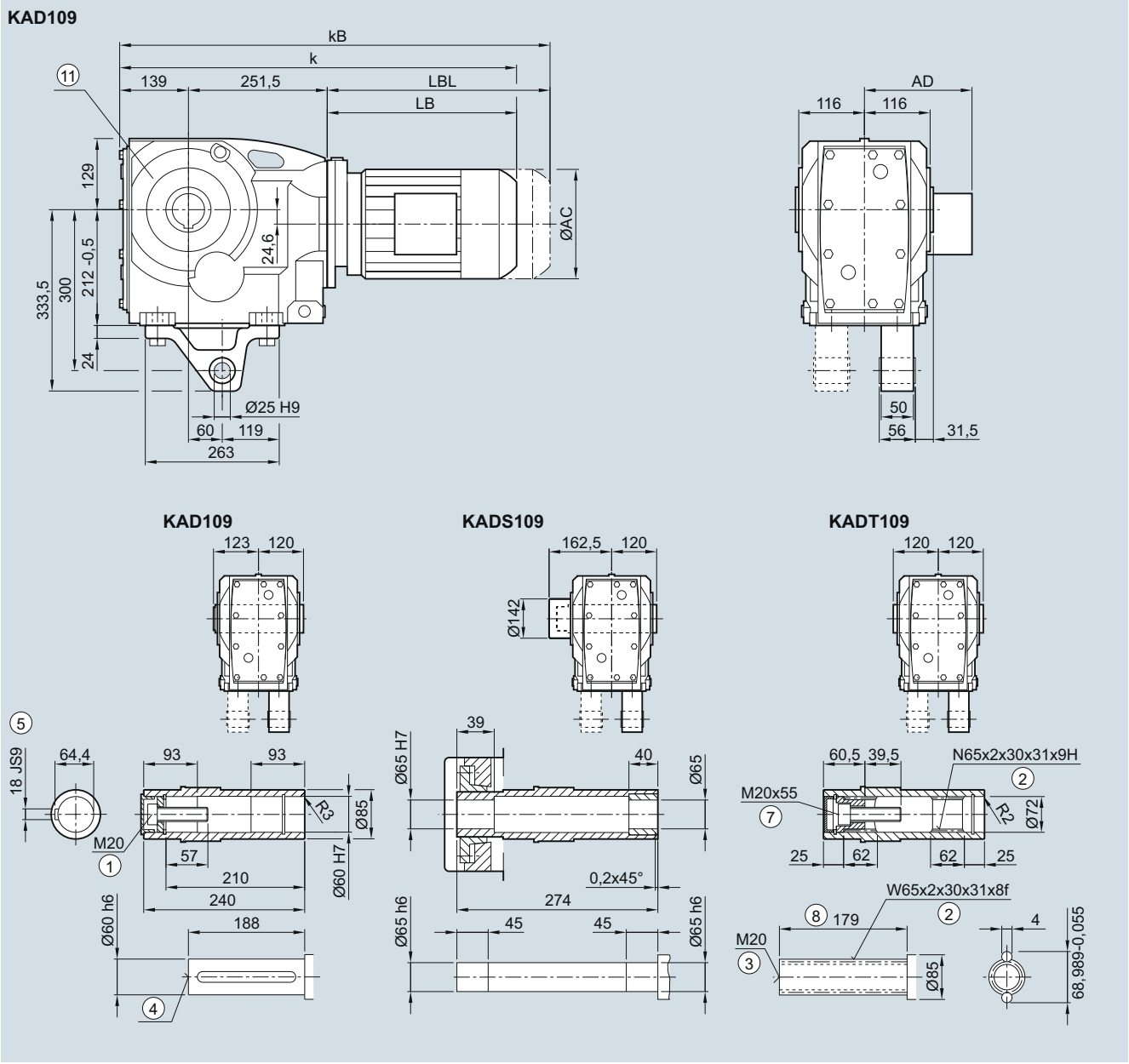

Motor	LE												LES	
	80	80Z	90	90Z	100	100Z	112	112Z	132	132Z	160	160Z	180	180Z
AC	156.3	156.3	173.8	173.8	198.0	198.0	222.0	222.0	264.0	264.0	318.0	318.0	352.5	352.5
AD[1)]	149.2	149.2	154.2	154.2	170.5	170.5	181.5	181.5	207.0	207.0	241.0	241.0	292.0	292.0
k	652.0	687.0	713.5	753.5	766.0	801.0	776.0	801.0	829.0	879.0	911.0	971.0	984.0	1 014.0
kB	712.0	747.0	783.5	823.5	844.5	879.5	849.0	874.0	933.5	983.5	1 027.0	1 087.0	1 113.0	1 143.0
LB	261.5	296.5	323.0	363.0	375.5	410.5	385.5	410.5	438.5	488.5	520.5	580.5	593.5	623.5
LBL	321.5	356.5	393.0	433.0	454.0	489.0	458.5	483.5	543.0	593.0	636.5	696.5	722.5	752.5

① ISO 4014 ② DIN 5480 ③ DIN 332-D ④ DIN 332 ⑤ Feather key/keyway DIN 6885-1 ⑦ ISO 4762 ⑧ Without locating shoulder +1 mm
⑪ Use bores only for housing flange design

[1)] AD depends on the motor options, for other dimensions see page 8/36.

© Siemens AG 2017

K..129 gearbox in a foot-mounted design

K030, KA030, KAS030, KAT030

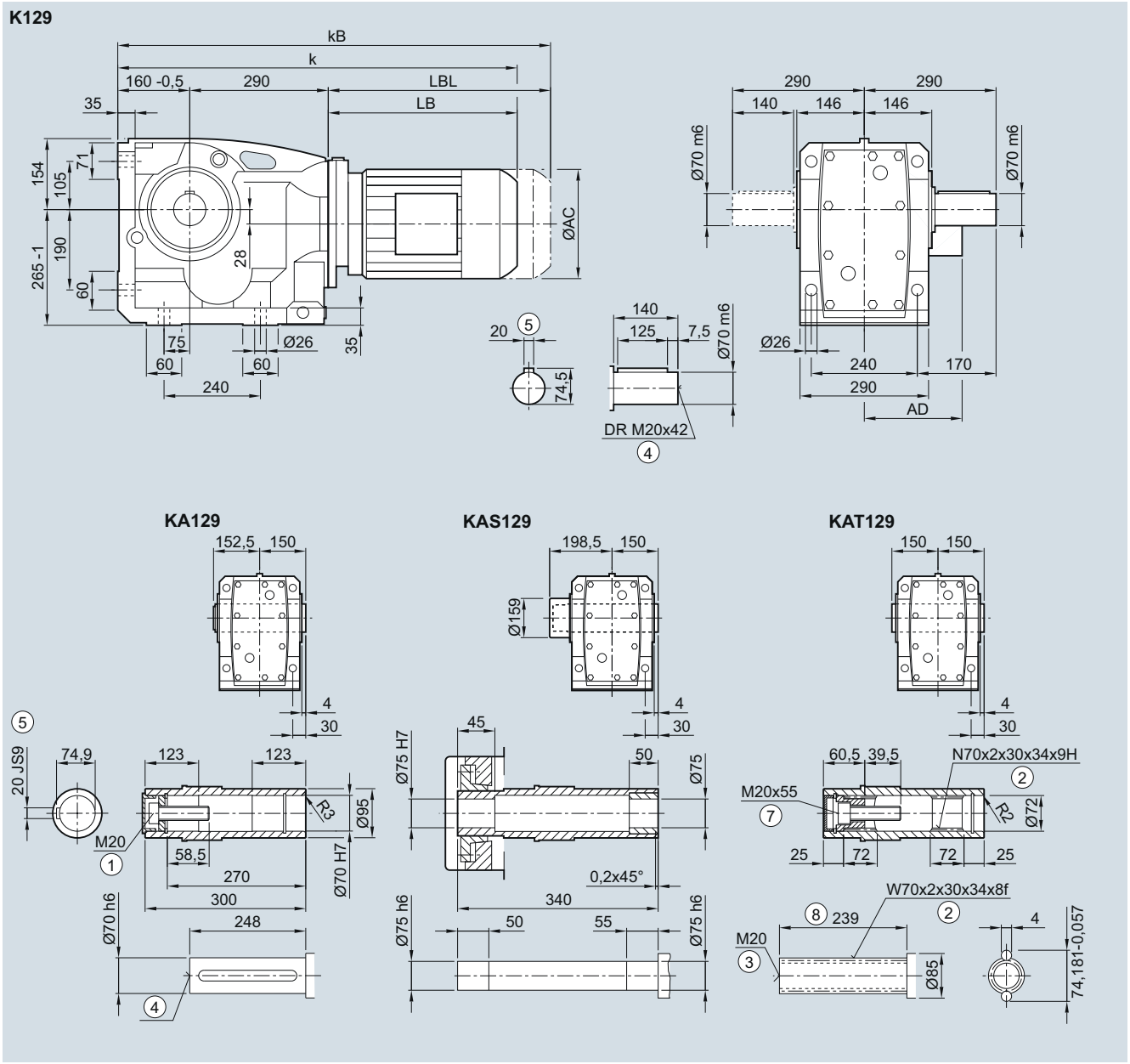

Motor	LE										LES					
	90	90Z	100	100Z	112	112Z	132	132Z	160	160Z	180	180Z	200	200Z	225	225Y
AC	173.8	173.8	198.0	198.0	222.0	222.0	264.0	264.0	318.0	318.0	352.5	352.5	392.5	392.5	439.0	439.0
AD[1)]	154.2	154.2	170.5	170.5	181.5	181.5	207.0	207.0	241.0	241.0	292.0	292.0	315.0	315.0	382.0	382.0
k	766.0	806.0	816.5	851.5	826.5	851.5	879.5	929.5	961.5	1 021.5	1 034.5	1 064.5	1 102.5	1 127.5	1 148.0	1 208.0
kB	836.0	876.0	895.0	930.0	899.5	924.5	984.0	1 034.0	1 077.5	1 137.5	1 163.5	1 193.5	1 249.5	1 274.5	1 376.0	1 436.0
LB	316.0	356.0	366.5	401.5	376.5	401.5	429.5	479.5	511.5	571.5	584.5	614.5	652.5	677.5	698.0	758.0
LBL	386.0	426.0	445.0	480.0	449.5	474.5	534.0	584.0	627.5	687.5	713.5	743.5	799.5	824.5	926	986

① ISO 4014 ② DIN 5480 ③ DIN 332-D ④ DIN 332 ⑤ Feather key/keyway DIN 6885-1 ⑦ ISO 4762 ⑧ Without locating shoulder +1 mm

1) AD depends on the motor options, for other dimensions see page 8/36.

© Siemens AG 2017

K.F.129 gearbox in a flange-mounted design

KF030, KAF030, KAFS030, KAFT030

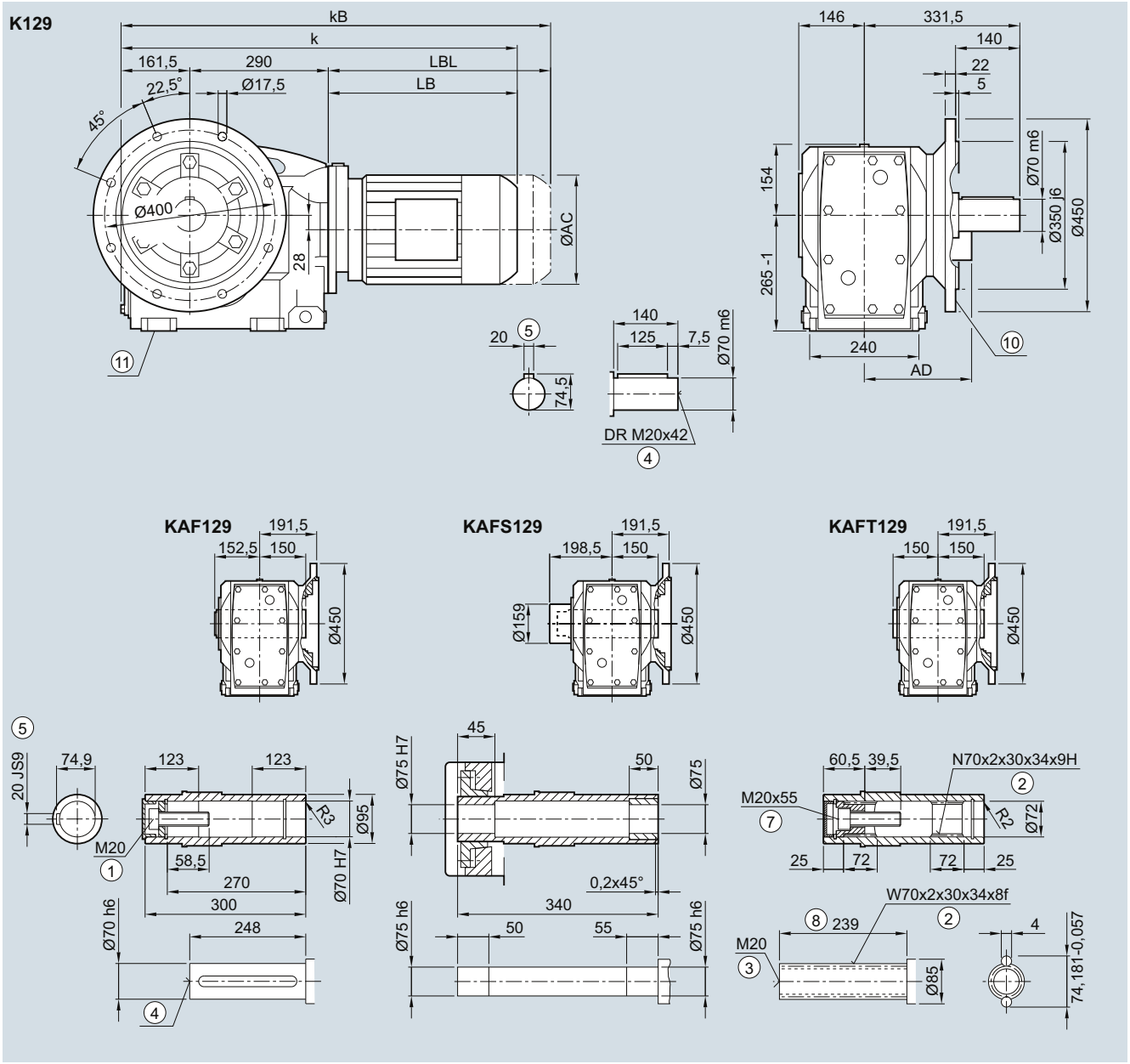

Motor	LE 90	90Z	100	100Z	112	112Z	132	132Z	160	160Z	LES 180	180Z	200	200Z	225	225Y
AC	173.8	173.8	198.0	198.0	222.0	222.0	264.0	264.0	318.0	318.0	352.5	352.5	392.5	392.5	439.0	439.0
AD[1)]	154.2	154.2	170.5	170.5	181.5	181.5	207.0	207.0	241.0	241.0	292.0	292.0	315.0	315.0	382.0	382.0
k	767.5	807.5	818.0	853.0	828.0	853.0	881.0	931.0	963.0	1 023.0	1 036.0	1 066.0	1 104.0	1 129.0	1 149.5	1 209.5
kB	837.5	877.5	896.5	931.5	901.0	926.0	985.5	1 035.5	1 079.0	1 139.0	1 165.0	1 195.0	1 251.0	1 276.0	1 377.5	1 437.5
LB	316.0	356.0	366.5	401.5	376.5	401.5	429.5	479.5	511.5	571.5	584.5	614.5	652.5	677.5	698.0	758.0
LBL	386.0	426.0	445.0	480.0	449.5	474.5	534.0	584.0	627.5	687.5	713.5	743.5	799.5	824.5	926.0	986.0

① ISO 4014 ② DIN 5480 ③ DIN 332-D ④ DIN 332 ⑤ Feather key/keyway DIN 6885-1 ⑦ ISO 4762 ⑧ Without locating shoulder +1 mm
⑩ For inner contour see page 5/136 ⑪ Use bores only for foot-mounted design
1) AD depends on the motor options, for other dimensions see page 8/36.

© Siemens AG 2017

K.Z.129 gearbox in a housing flange design

KZ030, KAZ030, KAZS030, KAZT030

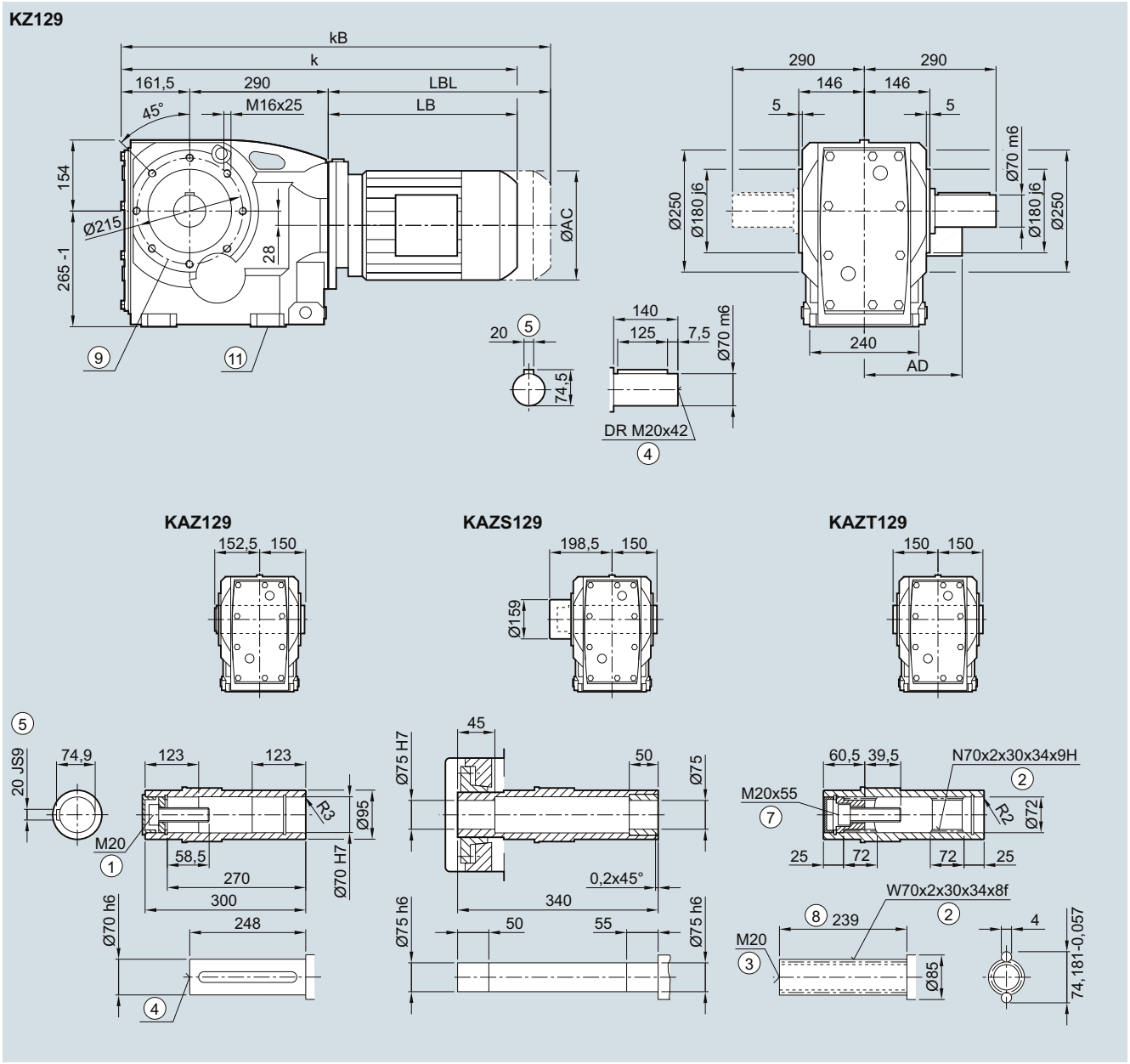

Motor	LE 90	90Z	100	100Z	112	112Z	132	132Z	160	160Z	LES 180	180Z	200	200Z	225	225Y
AC	173.8	173.8	198.0	198.0	222.0	222.0	264.0	264.0	318.0	318.0	352.5	352.5	392.5	392.5	439.0	439.0
AD[1)]	154.2	154.2	170.5	170.5	181.5	181.5	207.0	207.0	241.0	241.0	292.0	292.0	315.0	315.0	382.0	382.0
k	767.5	807.5	818.0	853.0	828.0	853.0	881.0	931.0	963.0	1 023.0	1 036.0	1 066.0	1 104.0	1 129.0	1 149.5	1 209.5
kB	837.5	877.5	896.5	931.5	901.0	926.0	985.5	1 035.5	1 079.0	1 139.0	1 165.0	1 195.0	1 251.0	1 276.0	1 377.5	1 437.5
LB	316.0	356.0	366.5	401.5	376.5	401.5	429.5	479.5	511.5	571.5	584.5	614.5	652.5	677.5	698.0	758.0
LBL	386.0	426.0	445.0	480.0	449.5	474.5	534.0	584.0	627.5	687.5	713.5	743.5	799.5	824.5	926.0	986.0

① ISO 4014 ② DIN 5480 ③ DIN 332-D ④ DIN 332 ⑤ Feather key/keyway DIN 6885-1 ⑦ ISO 4762 ⑧ Without locating shoulder +1 mm
⑨ For pin holes see page 5/137 ⑪ Use bores only for foot-mounted design
1) AD depends on the motor options, for other dimensions see page 8/36.

© Siemens AG 2017

5

KAD.129 gearbox in a shaft-mounted design

KAD030, KADS030, KADT030

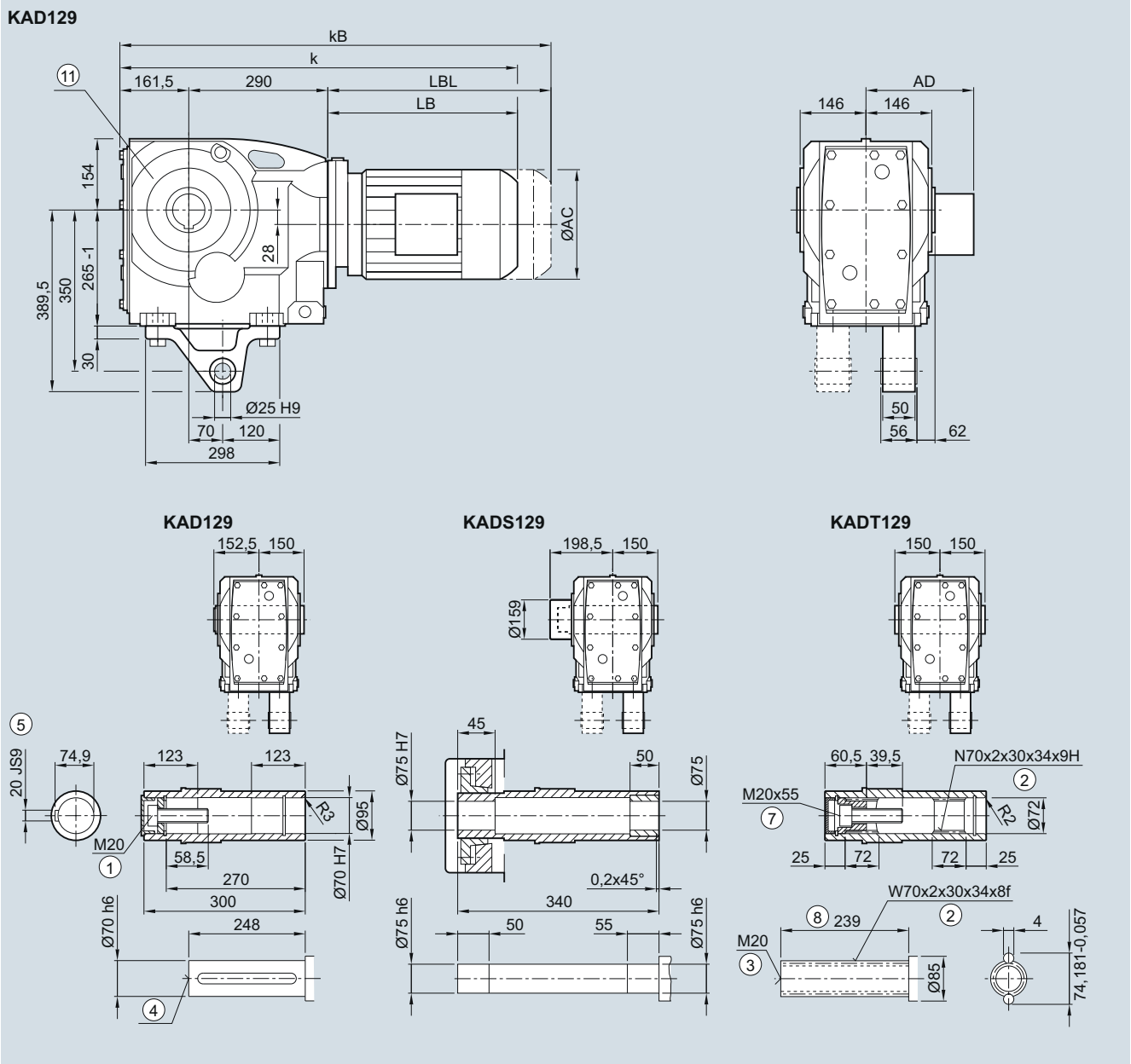

Motor	LE										LES					
	90	90Z	100	100Z	112	112Z	132	132Z	160	160Z	180	180Z	200	200Z	225	225Y
AC	173.8	173.8	198.0	198.0	222.0	222.0	264.0	264.0	318.0	318.0	352.5	352.5	392.5	392.5	439.0	439.0
AD[1)]	154.2	154.2	170.5	170.5	181.5	181.5	207.0	207.0	241.0	241.0	292.0	292.0	315.0	315.0	382.0	382.0
k	767.5	807.5	818.0	853.0	828.0	853.0	881.0	931.0	963.0	1 023.0	1 036.0	1 066.0	1 104.0	1 129.0	1 149.5	1 209.5
kB	837.5	877.5	896.5	931.5	901.0	926.0	985.5	1 035.5	1 079.0	1 139.0	1 165.0	1 195.0	1 251.0	1 276.0	1 377.5	1 437.5
LB	316.0	356.0	366.5	401.5	376.5	401.5	429.5	479.5	511.5	571.5	584.5	614.5	652.5	677.5	698.0	758.0
LBL	386.0	426.0	445.0	480.0	449.5	474.5	534.0	584.0	627.5	687.5	713.5	743.5	799.5	824.5	926.0	986.0

① ISO 4014 ② DIN 5480 ③ DIN 332-D ④ DIN 332 ⑤ Feather key/keyway DIN 6885-1 ⑦ ISO 4762 ⑧ Without locating shoulder +1 mm
⑪ Use bores only for housing flange design

[1)] AD depends on the motor options, for other dimensions see page 8/36.

© Siemens AG 2017

K..149 gearbox in a foot-mounted design

K030, KA030, KAS030, KAT030

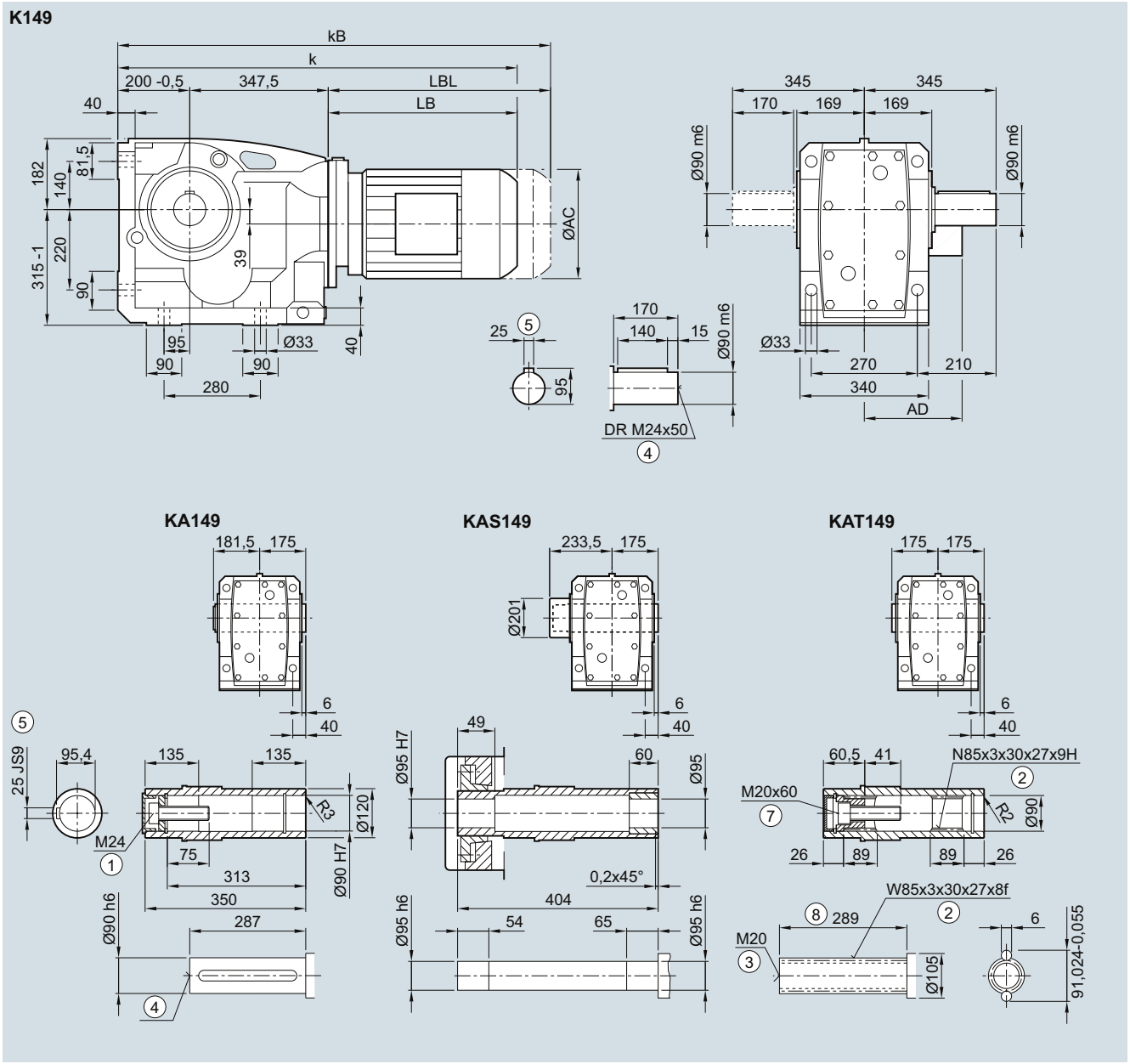

Motor	LE										LES						
	90	90Z	100	100Z	112	112Z	132	132Z	160	160Z	180	180Z	200	200Z	225	225Y	250
AC	173.8	173.8	198.0	198.0	222.0	222.0	264.0	264.0	318.0	318.0	352.5	352.5	392.5	392.5	439.0	439.0	487.0
AD[1)]	154.2	154.2	170.5	170.5	181.5	181.5	207.0	207.0	241.0	241.0	292.0	292.0	315.0	315.0	382.0	382.0	457.5
k	856.5	896.5	905.0	940.0	915.0	940.0	966.0	1 016.0	1 048.0	1 108.0	1 121.0	1 151.0	1 189.0	1 214.0	1 240.5	1 300.5	1 346.0
kB	926.5	966.5	983.5	1 018.5	988.0	1 013.0	1 070.5	1 120.5	1 164.0	1 224.0	1 250.0	1 280.0	1 336.0	1 361.0	1 468.5	1 528.5	1 571.0
LB	309.0	349.0	357.5	392.5	367.5	392.5	418.5	468.5	500.5	560.5	573.5	603.5	641.5	666.5	693.0	753.0	798.5
LBL	379.0	419.0	436.0	471.0	440.5	465.5	523.0	573.0	616.5	676.5	702.5	732.5	788.5	813.5	921.0	981.0	1 023.5

① ISO 4014 ② DIN 5480 ③ DIN 332-D ④ DIN 332 ⑤ Feather key/keyway DIN 6885-1 ⑦ ISO 4762 ⑧ Without locating shoulder +1 mm

[1)] AD depends on the motor options, for other dimensions see page 8/36.

© Siemens AG 2017

K.F.149 gearbox in a flange-mounted design

KF030, KAF030, KAFS030, KAFT030

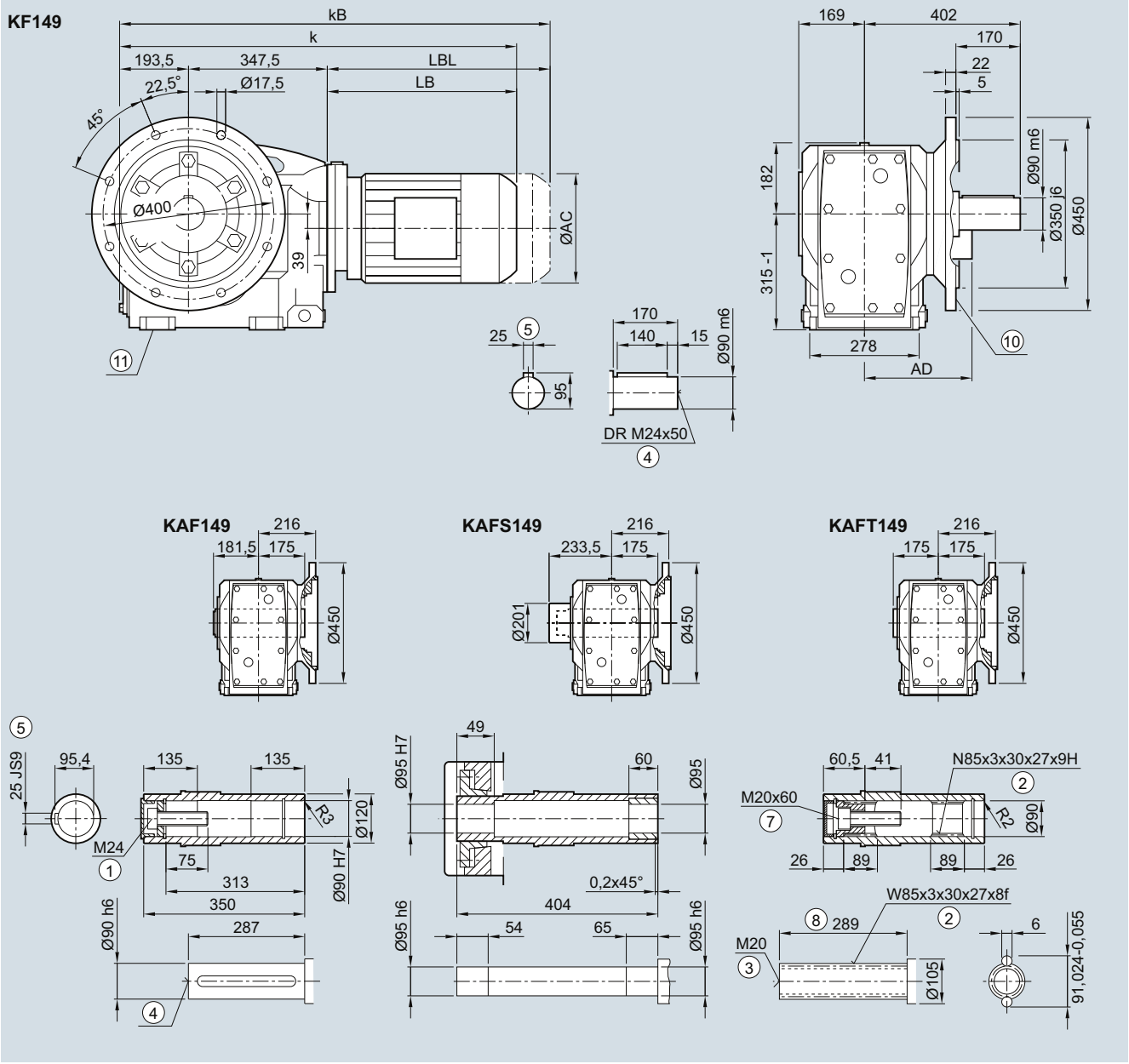

Motor	LE										LES						
	90	90Z	100	100Z	112	112Z	132	132Z	160	160Z	180	180Z	200	200Z	225	225Y	250
AC	173.8	173.8	198.0	198.0	222.0	222.0	264.0	264.0	318.0	318.0	352.5	352.5	392.5	392.5	439.0	439.0	487.0
AD[1)]	154.2	154.2	170.5	170.5	181.5	181.5	207.0	207.0	241.0	241.0	292.0	292.0	315.0	315.0	382.0	382.0	457.5
k	850.0	890.0	898.5	933.5	908.5	933.5	959.5	1 009.5	1 041.5	1 101.5	1 114.5	1 144.5	1 182.5	1 207.5	1 234.0	1 294.0	1 339.5
kB	920.0	960.0	977.0	1 012.0	981.5	1 006.5	1 064.0	1 114.0	1 157.5	1 217.5	1 243.5	1 273.5	1 329.5	1 354.5	1 462.0	1 522.0	1 564.5
LB	309.0	349.0	357.5	392.5	367.5	392.5	418.5	468.5	500.5	560.5	573.5	603.5	641.5	666.5	693.0	753.0	798.5
LBL	379.0	419.0	436.0	471.0	440.5	465.5	523.0	573.0	616.5	676.5	702.5	732.5	788.5	813.5	921.0	981.0	1 023.5

① ISO 4014 ② DIN 5480 ③ DIN 332-D ④ DIN 332 ⑤ Feather key/keyway DIN 6885-1 ⑦ ISO 4762 ⑧ Without locating shoulder +1 mm
⑩ For inner contour see page 5/136 ⑪ Use bores only for foot-mounted design
1) AD depends on the motor options, for other dimensions see page 8/36.

© Siemens AG 2017

K.Z.149 gearbox in a housing flange design

KZ030, KAZ030, KAZS030, KAZT030

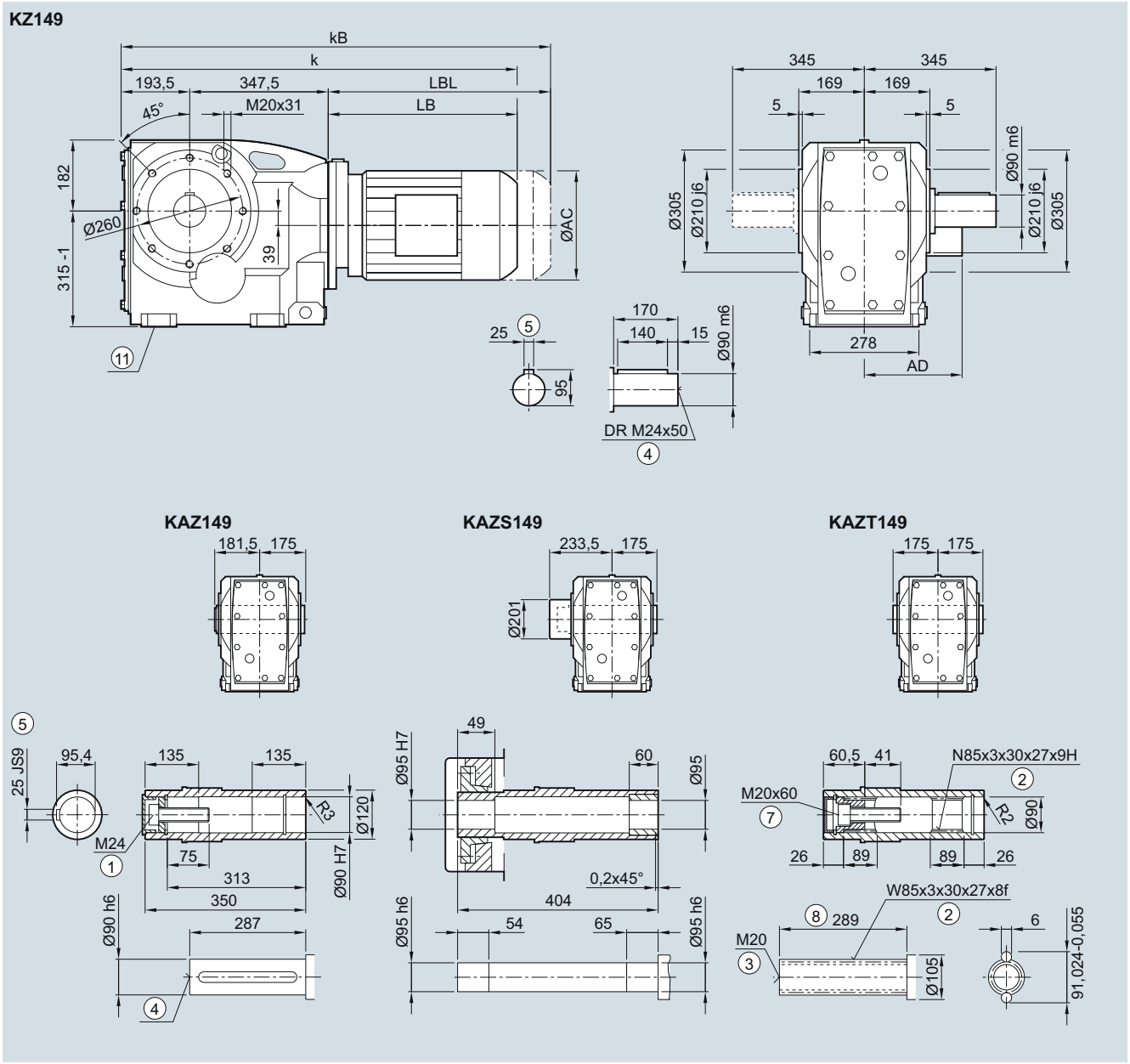

Motor	LE										LES						
	90	90Z	100	100Z	112	112Z	132	132Z	160	160Z	180	180Z	200	200Z	225	225Y	250
AC	173.8	173.8	198.0	198.0	222.0	222.0	264.0	264.0	318.0	318.0	352.5	352.5	392.5	392.5	439.0	439.0	487.0
AD[1)]	154.2	154.2	170.5	170.5	181.5	181.5	207.0	207.0	241.0	241.0	292.0	292.0	315.0	315.0	382.0	382.0	457.5
k	850.0	890.0	898.5	933.5	908.5	933.5	959.5	1 009.5	1 041.5	1 101.5	1 114.5	1 144.5	1 182.5	1 207.5	1 234.0	1 294.0	1 339.5
kB	920.0	960.0	977.0	1 012.0	981.5	1 006.5	1 064.0	1 114.0	1 157.5	1 217.5	1 243.5	1 273.5	1 329.5	1 354.5	1 462.0	1 522.0	1 564.5
LB	309.0	349.0	357.5	392.5	367.5	392.5	418.5	468.5	500.5	560.5	573.5	603.5	641.5	666.5	693.0	753.0	798.5
LBL	379.0	419.0	436.0	471.0	440.5	465.5	523.0	573.0	616.5	676.5	702.5	732.5	788.5	813.5	921.0	981.0	1 023.5

① ISO 4014 ② DIN 5480 ③ DIN 332-D ④ DIN 332 ⑤ Feather key/keyway DIN 6885-1 ⑦ ISO 4762 ⑧ Without locating shoulder +1 mm
⑪ Use bores only for foot-mounted design

1) AD depends on the motor options, for other dimensions see page 8/36.

© Siemens AG 2017

5

KAD.149 gearbox in a shaft-mounted design

KAD031, KADS031, KADT031

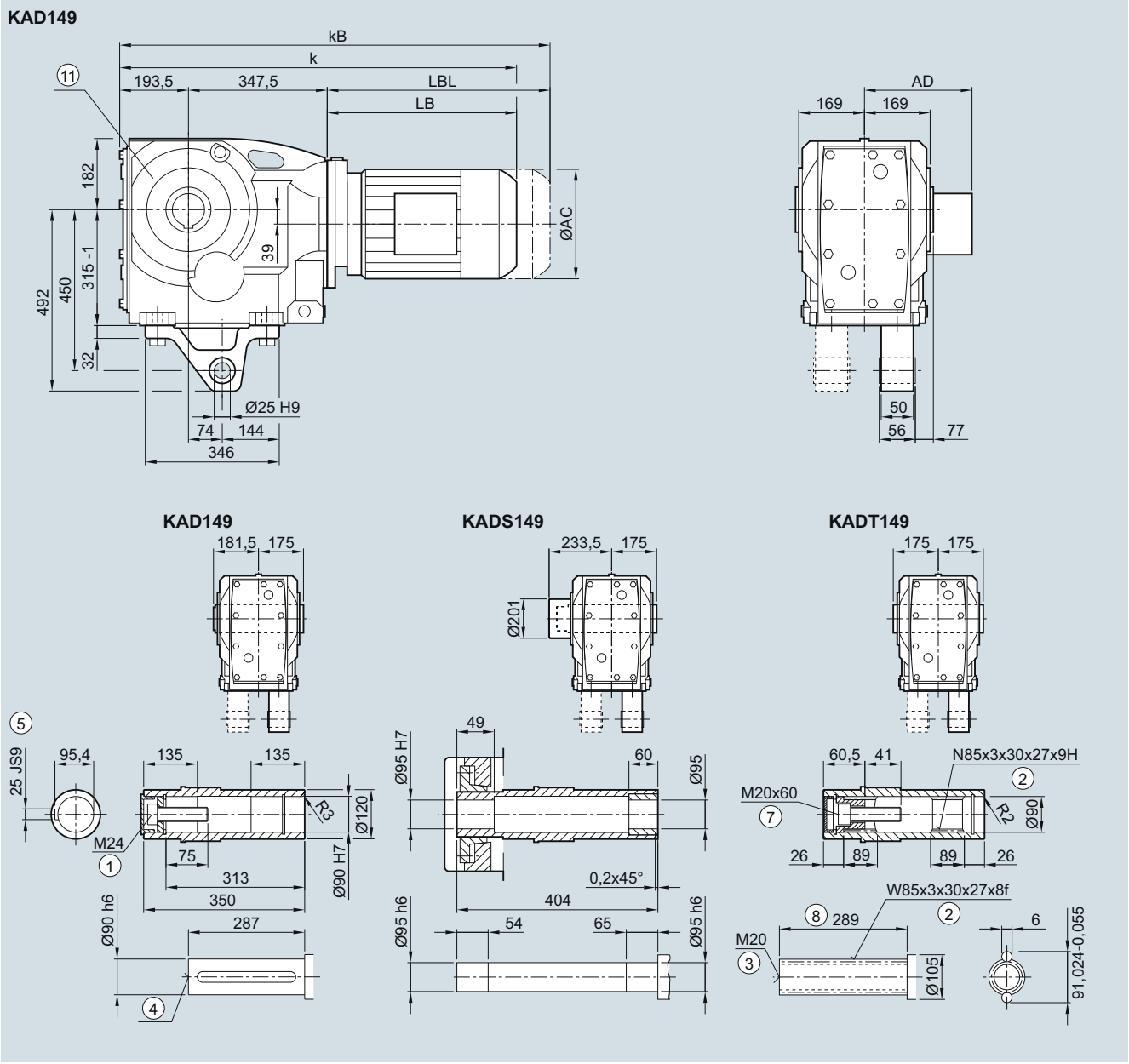

Motor	LE 90	90Z	100	100Z	112	112Z	132	132Z	160	160Z	LES 180	180Z	200	200Z	225	225Y	250
AC	173.8	173.8	198.0	198.0	222.0	222.0	264.0	264.0	318.0	318.0	352.5	352.5	392.5	392.5	439.0	439.0	487.0
AD[1)]	154.2	154.2	170.5	170.5	181.5	181.5	207.0	207.0	241.0	241.0	292.0	292.0	315.0	315.0	382.0	382.0	457.5
k	850.0	890.0	898.5	933.5	908.5	933.5	959.5	1 009.5	1 041.5	1 101.5	1 114.5	1 144.5	1 182.5	1 207.5	1 234.0	1 294.0	1 339.5
kB	920.0	960.0	977.0	1 012.0	981.5	1 006.5	1 064.0	1 114.0	1 157.5	1 217.5	1 243.5	1 273.5	1 329.5	1 354.5	1 462.0	1 522.0	1 564.5
LB	309.0	349.0	357.5	392.5	367.5	392.5	418.5	468.5	500.5	560.5	573.5	603.5	641.5	666.5	693.0	753.0	798.5
LBL	379.0	419.0	436.0	471.0	440.5	465.5	523.0	573.0	616.5	676.5	702.5	732.5	788.5	813.5	921.0	981.0	1 023.5

① ISO 4014 ② DIN 5480 ③ DIN 332-D ④ DIN 332 ⑤ Feather key/keyway DIN 6885-1 ⑦ ISO 4762 ⑧ Without locating shoulder +1 mm
⑪ Use bores only for housing flange design
1) AD depends on the motor options, for other dimensions see page 8/36.

© Siemens AG 2017

K..169 gearbox in a foot-mounted design

K030, KA030, KAS030, KAT030

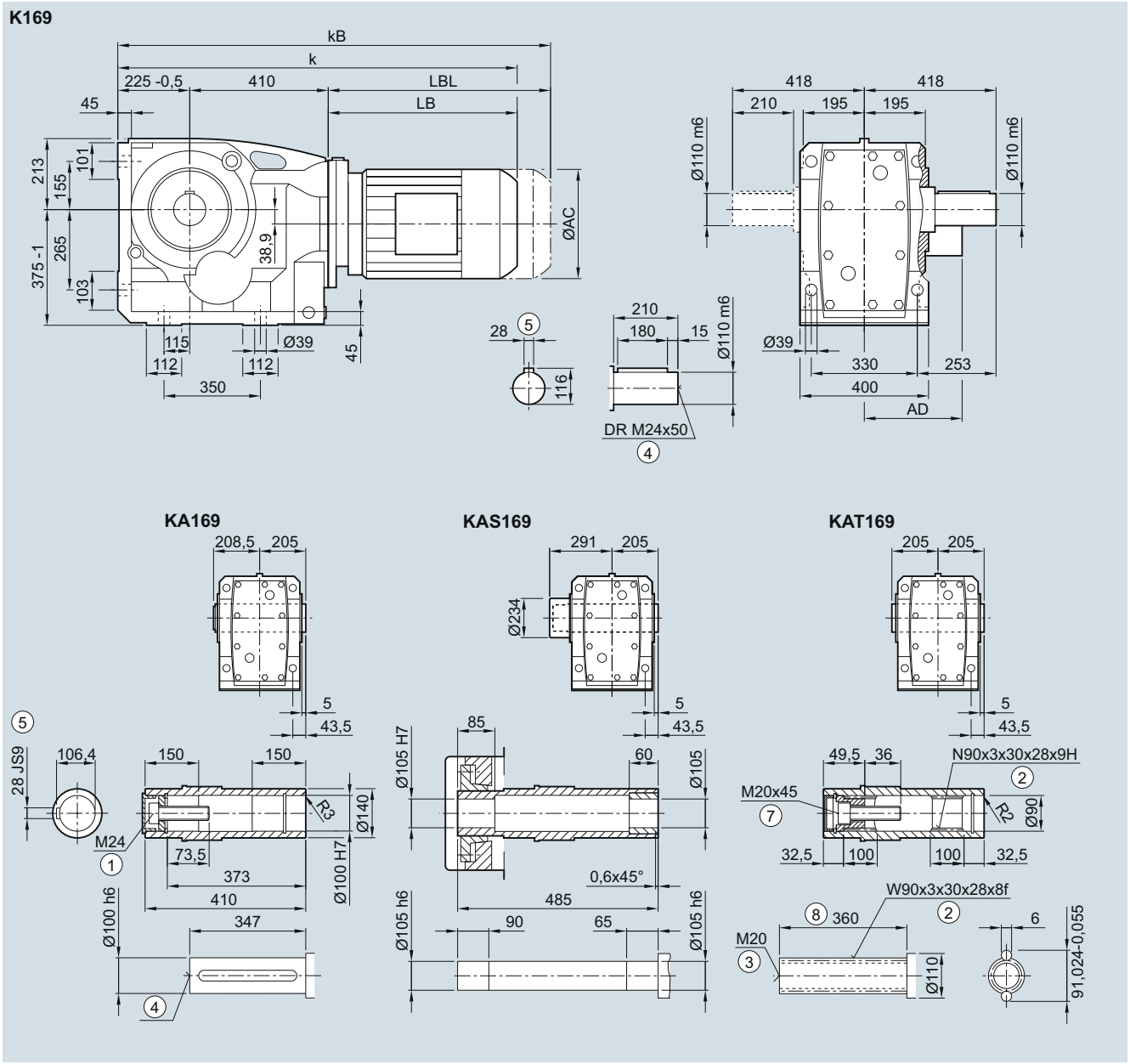

Motor	LE								LES						
	100	100Z	112	112Z	132	132Z	160	160Z	180	180Z	200	200Z	225	225Y	250
AC	198.0	198.0	222.0	222.0	264.0	264.0	318.0	318.0	352.5	352.5	392.5	392.5	439.0	439.0	487.0
AD[1)]	170.5	170.5	181.5	181.5	207.0	207.0	241.0	241.0	292.0	292.0	315.0	315.0	382.0	382.0	457.5
k	991.0	1 026.0	1 001.0	1 026.0	1 047.0	1 097.0	1 129.0	1 189.0	1 202.0	1 232.0	1 270.0	1 295.0	1 315.5	1 375.5	1 427.0
kB	1 069.5	1 104.5	1 074.0	1 099.0	1 151.5	1 201.5	1 245.0	1 305.0	1 331.0	1 361.0	1 417.0	1 442.0	1 543.5	1 603.5	1 652.0
LB	356.0	391.0	366.0	391.0	412.0	462.0	494.0	554.0	567.0	597.0	635.0	660.0	680.5	740.5	792.0
LBL	434.5	469.5	439	464.0	516.5	566.5	610.0	670.0	696.0	726.0	782.0	807.0	908.5	968.5	1 017.0

① ISO 4014 ② DIN 5480 ③ DIN 332-D ④ DIN 332 ⑤ Feather key/keyway DIN 6885-1 ⑦ ISO 4762 ⑧ Without locating shoulder +1 mm

[1)] AD depends on the motor options, for other dimensions see page 8/36.

© Siemens AG 2017

K.F.169 gearbox in a flange-mounted design

KF030, KAF030, KAFS030, KAFT030

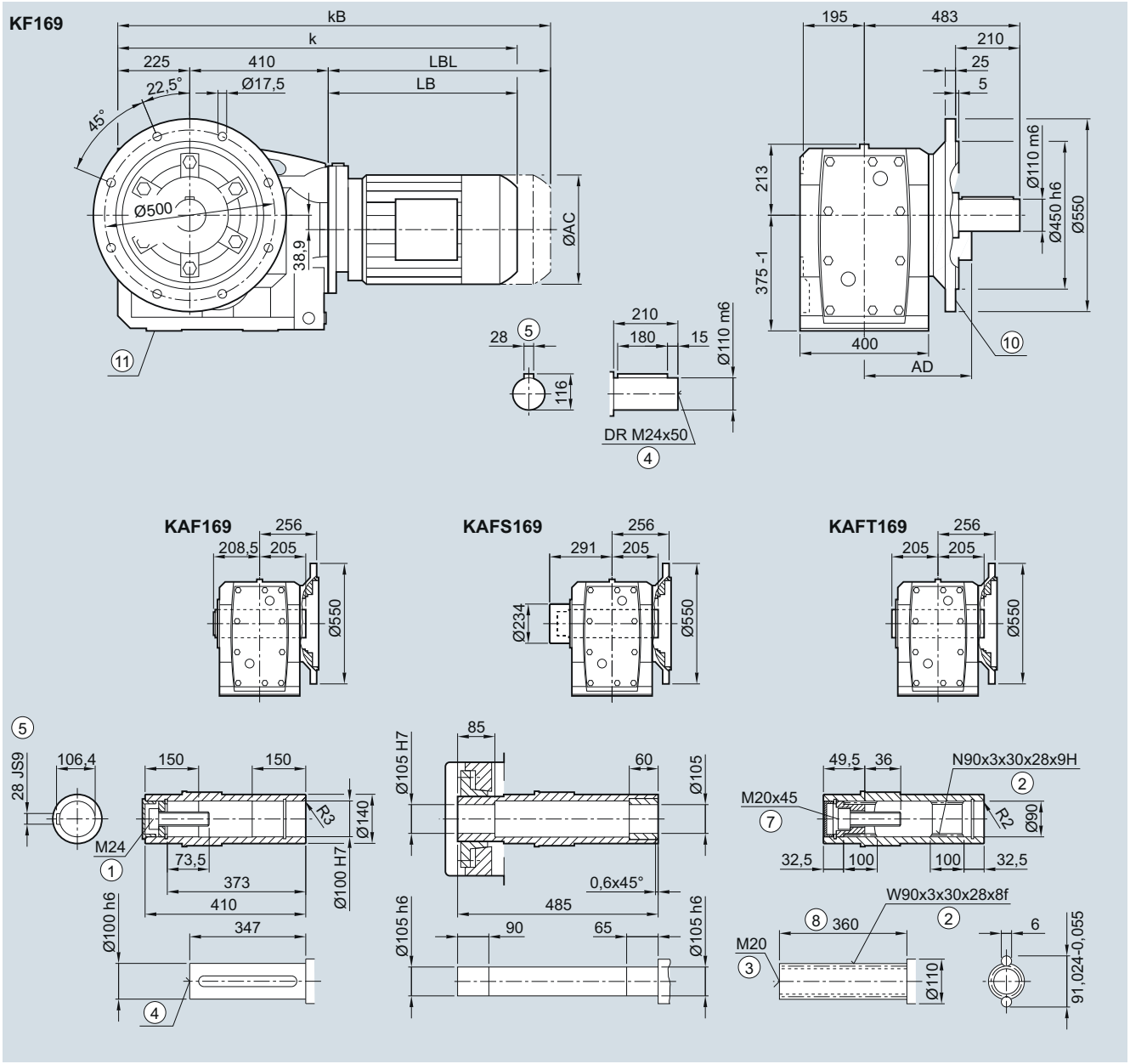

Motor	LE 100	100Z	112	112Z	132	132Z	160	160Z	LES 180	180Z	200	200Z	225	225Y	250
AC	198.0	198.0	222.0	222.0	264.0	264.0	318.0	318.0	352.5	352.5	392.5	392.5	439.0	439.0	487.0
AD[1)]	170.5	170.5	181.5	181.5	207.0	207.0	241.0	241.0	292.0	292.0	315.0	315.0	382.0	382.0	457.5
k	991.0	1026.0	1001.0	1026.0	1047.0	1097.0	1129.0	1189.0	1202.0	1232.0	1 270.0	1 295.0	1 315.5	1 375.5	1 427.0
kB	1069.5	1104.5	1074.0	1099.0	1151.5	1201.5	1245.0	1305.0	1331.0	1361.0	1 417.0	1 442.0	1 543.5	1 603.5	1 652.0
LB	356.0	391.0	366.0	391.0	412.0	462.0	494.0	554.0	567.0	597.0	635.0	660.0	680.55	740.5	792.0
LBL	434.5	469.5	439.0	464.0	516.5	566.5	610.0	670.0	696.0	726.0	782.0	807.0	908.5	968.5	1 017.0

① ISO 4014 ② DIN 5480 ③ DIN 332-D ④ DIN 332 ⑤ Feather key/keyway DIN 6885-1 ⑦ ISO 4762 ⑧ Without locating shoulder +1 mm
⑩ For inner contour see page 5/136 ⑪ Use bores only for foot-mounted design
1) AD depends on the motor options, for other dimensions see page 8/36.

© Siemens AG 2017

K.Z.169 gearbox in a housing flange design

KZ030, KAZ030, KAZS030, KAZT030

KZ169

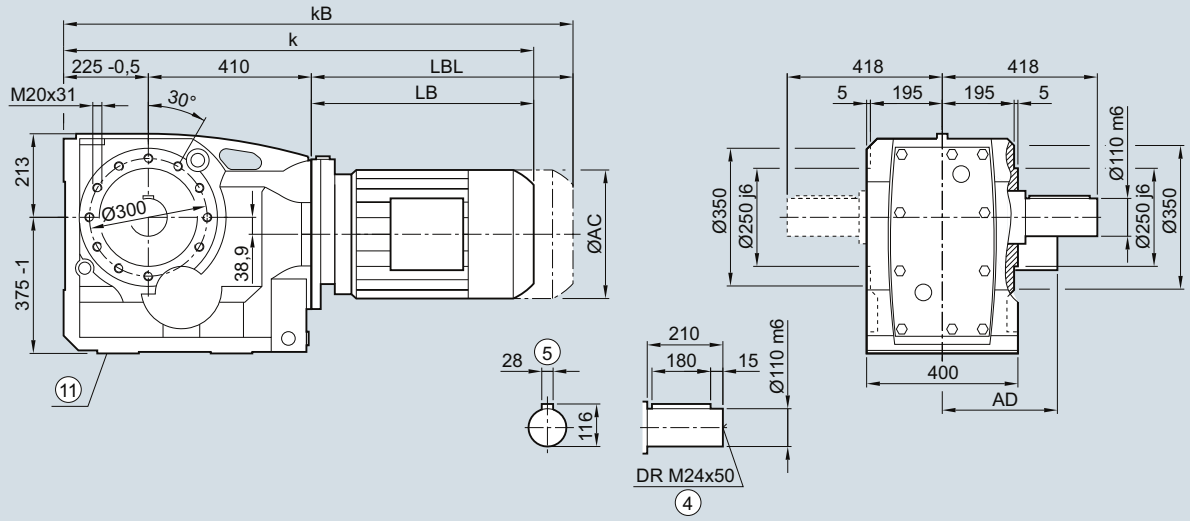

KAZ169

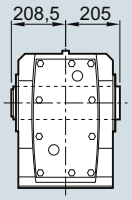

KAZS169

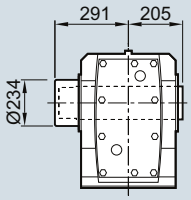

KAZT169

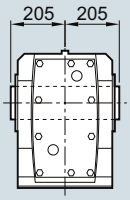

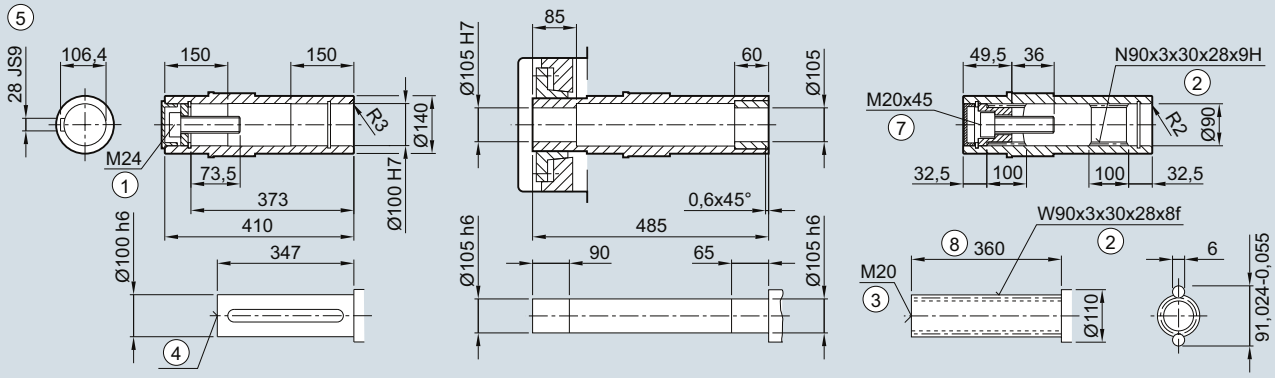

Motor	LE								LES						
	100	100Z	112	112Z	132	132Z	160	160Z	180	180Z	200	200Z	225	225Y	250
AC	198.0	198.0	222.0	222.0	264.0	264.0	318.0	318.0	352.5	352.5	392.5	392.5	439.0	439.0	487.0
AD[1)]	170.5	170.5	181.5	181.5	207.0	207.0	241.0	241.0	292.0	292.0	315.0	315.0	382.0	382.0	457.5
k	991.0	1026.0	1001.0	1026.0	1047.0	1097.0	1129.0	1189.0	1202.0	1232.0	1 270.0	1 295.0	1 315.5	1 375.5	1 427.0
kB	1069.5	1104.5	1074.0	1099.0	1151.5	1201.5	1245.0	1305.0	1331.0	1361.0	1 417.0	1 442.0	1 543.5	1 603.5	1 652.0
LB	356.0	391.0	366.0	391.0	412.0	462.0	494.0	554.0	567.0	597.0	635.0	660.0	680.55	740.5	792.0
LBL	434.5	469.5	439.0	464.0	516.5	566.5	610.0	670.0	696.0	726.0	782.0	807.0	908.5	968.5	1 017.0

① ISO 4014 ② DIN 5480 ③ DIN 332-D ④ DIN 332 ⑤ Feather key/keyway DIN 6885-1 ⑦ ISO 4762 ⑧ Without locating shoulder +1 mm
⑪ Use bores only for foot-mounted design

1) AD depends on the motor options, for other dimensions see page 8/36.

© Siemens AG 2017

5

KAD.169 gearbox in a shaft-mounted design

KAD031, KADS031, KADT031

KAD169

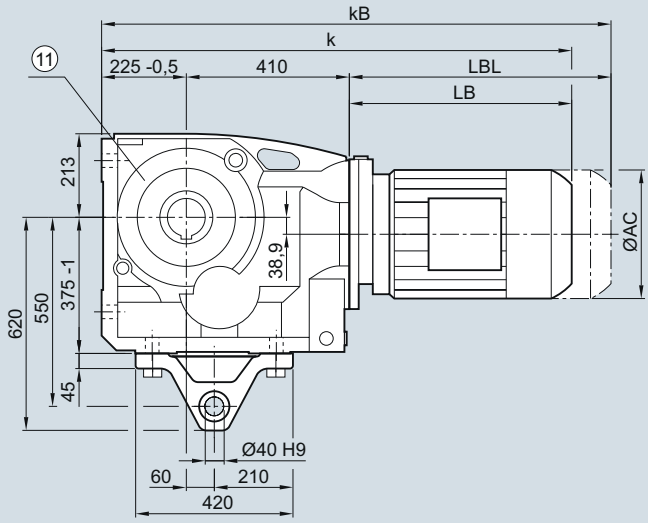

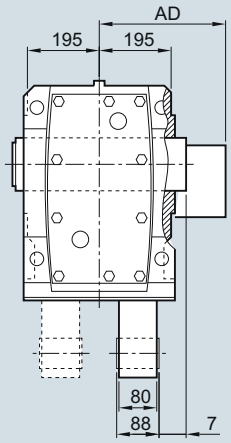

KAD169

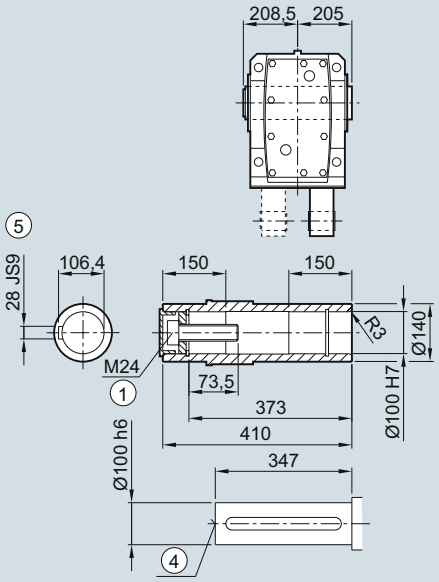

KADS169

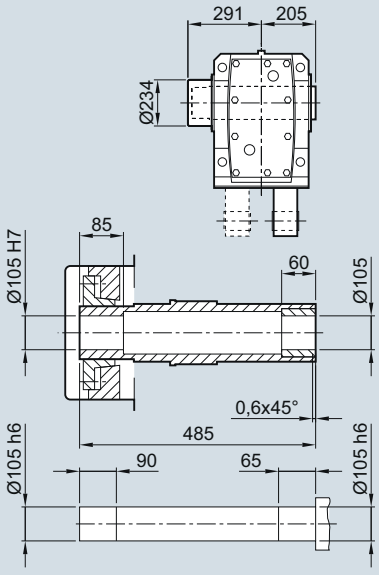

KADT169

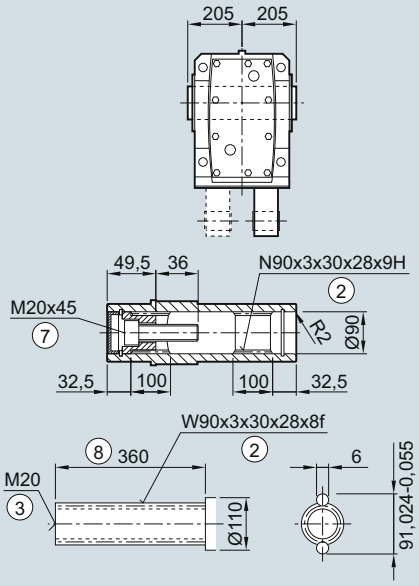

Motor	LE 100	100Z	112	112Z	132	132Z	160	160Z	LES 180	180Z	200	200Z	225	225Y	250
AC	198.0	198.0	222.0	222.0	264.0	264.0	318.0	318.0	352.5	352.5	392.5	392.5	439.0	439.0	487.0
AD[1)]	170.5	170.5	181.5	181.5	207.0	207.0	241.0	241.0	292.0	292.0	315.0	315.0	382.0	382.0	457.5
k	991.0	1026.0	1001.0	1026.0	1047.0	1097.0	1129.0	1189.0	1202.0	1232.0	1 270.0	1 295.0	1 315.5	1 375.5	1 427.0
kB	1069.5	1104.5	1074.0	1099.0	1151.5	1201.5	1245.0	1305.0	1331.0	1361.0	1 417.0	1 442.0	1 543.5	1 603.5	1 652.0
LB	356.0	391.0	366.0	391.0	412.0	462.0	494.0	554.0	567.0	597.0	635.0	660.0	680.55	740.5	792.0
LBL	434.5	469.5	439.0	464.0	516.5	566.5	610.0	670.0	696.0	726.0	782.0	807.0	908.5	968.5	1 017.0

① ISO 4014 ② DIN 5480 ③ DIN 332-D ④ DIN 332 ⑤ Feather key/keyway DIN 6885-1 ⑦ ISO 4762 ⑧ Without locating shoulder +1 mm
⑪ Use bores only for housing flange design
1) AD depends on the motor options, for other dimensions see page 8/36.

© Siemens AG 2017

K..189 gearbox in a foot-mounted design

K030, KA030, KAS030, KAT030

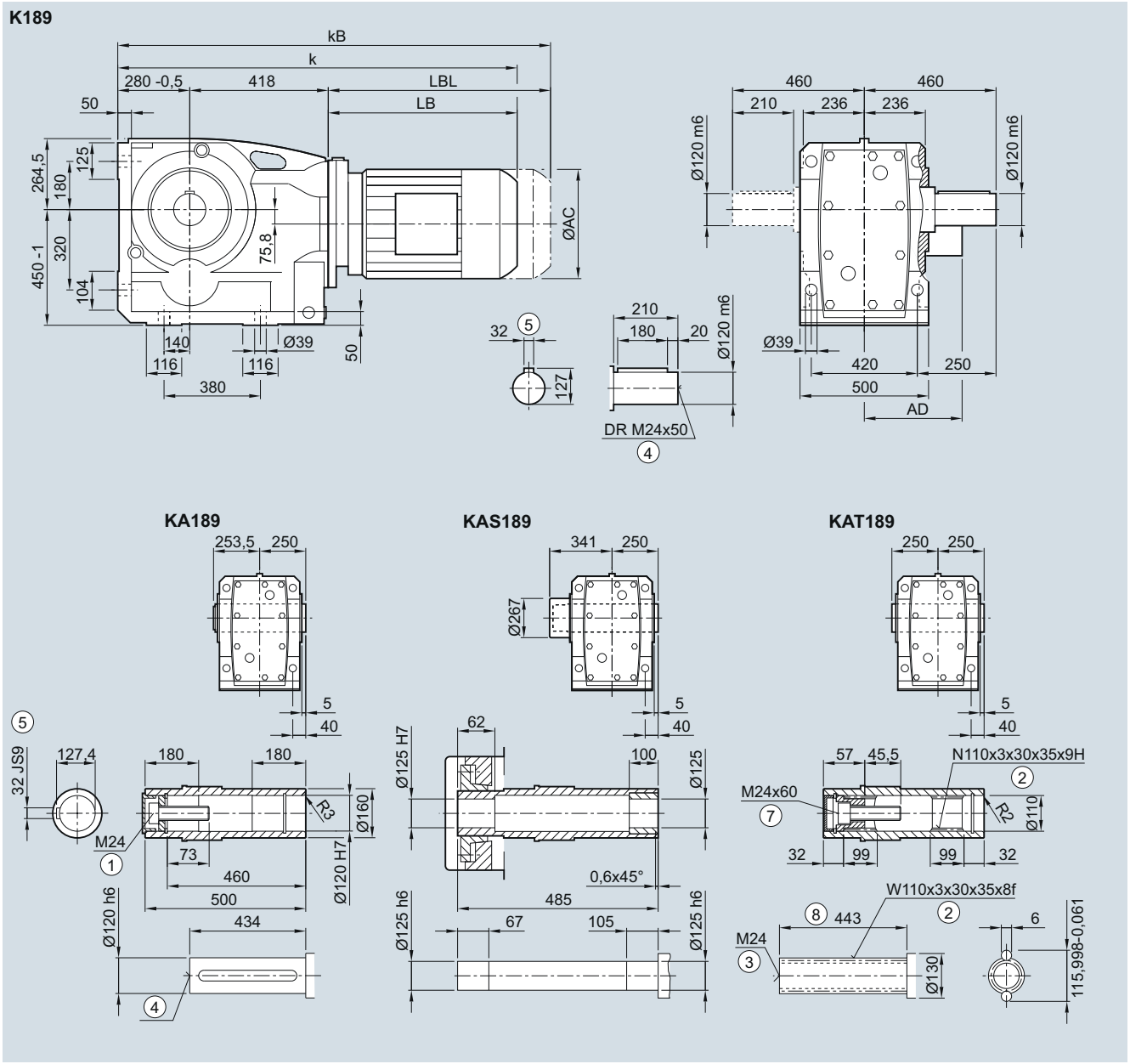

Motor	LE						LES						
	112	112Z	132	132Z	160	160Z	180	180Z	200	200Z	225	225Y	250
AC	222.0	222.0	264.0	264.0	318.0	318.0	352.5	352.5	392.5	392.5	439.0	439.0	487.0
AD[1)]	181.5	181.5	207.0	207.0	241.0	241.0	292.0	292.0	315.0	315.0	382.0	382.0	457.5
k	1 051.5	1 076.5	1 097.0	1 147.0	1 179.0	1 239.0	1 251.5	1 281.5	1 319.5	1 344.5	1 364.0	1 424.0	1 471.5
kB	1 124.5	1 149.5	1 201.5	1 251.5	1 295.0	1 355.0	1 380.5	1 410.5	1 466.5	1 491.5	1 592.0	1 652.0	1 696.5
LB	353.5	378.5	399.0	449.0	481.0	541.0	553.5	583.5	621.5	646.5	666.0	726.0	773.5
LBL	426.5	451.5	503.5	553.5	597.0	657.0	682.5	712.5	768.5	793.5	894.0	954.0	998.5

① ISO 4014 ② DIN 5480 ③ DIN 332-D ④ DIN 332 ⑤ Feather key/keyway DIN 6885-1 ⑦ ISO 4762 ⑧ Without locating shoulder +1 mm

[1)] AD depends on the motor options, for other dimensions see page 8/36.

© Siemens AG 2017

K.F.189 gearbox in a flange-mounted design

KF030, KAF030, KAFS030, KAFT030

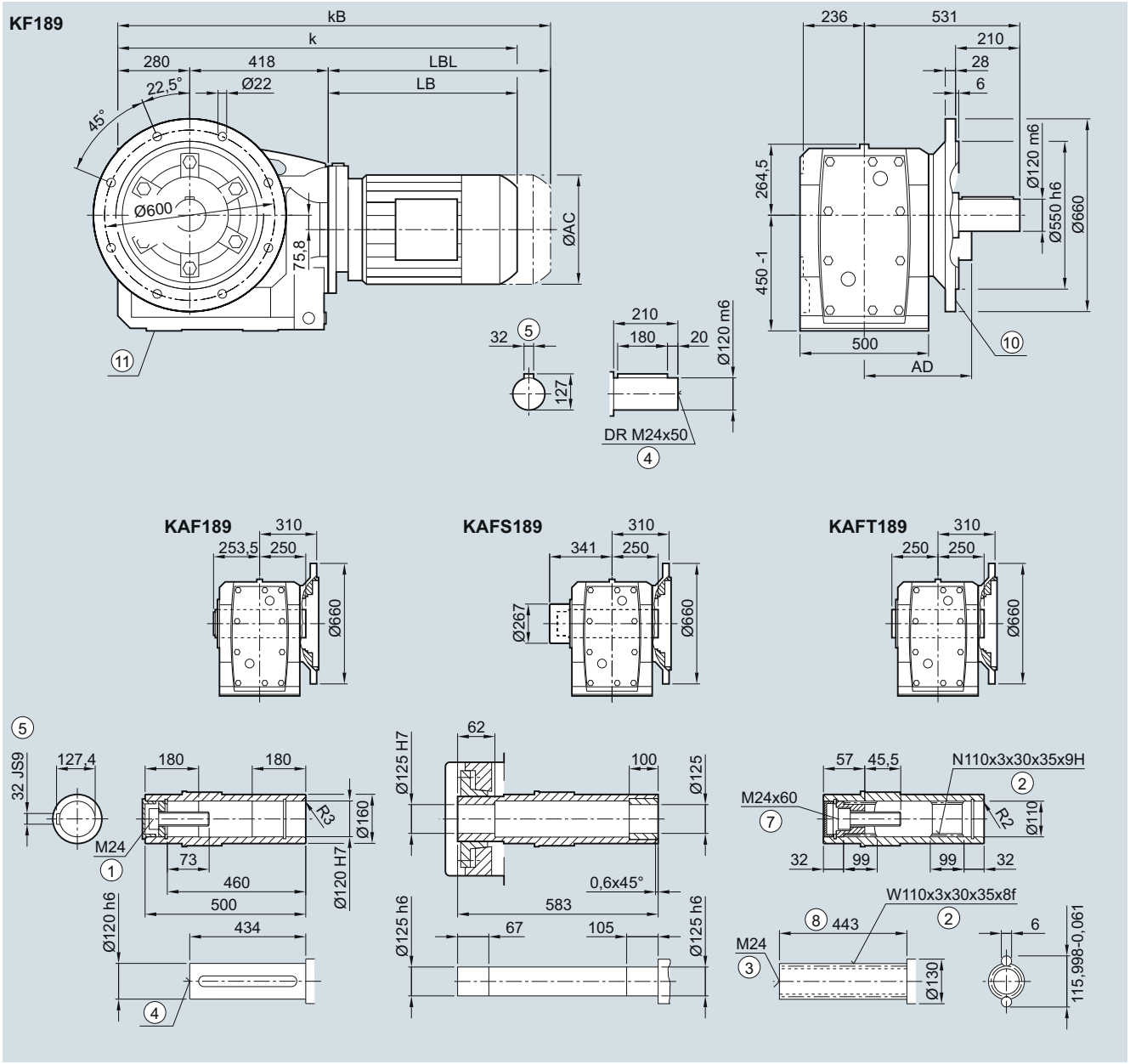

Motor	LE 112	112Z	132	132Z	160	160Z	LES 180	180Z	200	200Z	225	225Y	250
AC	222.0	222.0	264.0	264.0	318.0	318.0	352.5	352.5	392.5	392.5	439.0	439.0	487.0
AD[1)]	181.5	181.5	207.0	207.0	241.0	241.0	292.0	292.0	315.0	315.0	382.0	382.0	457.5
k	1 051.5	1 076.5	1 097.0	1 147.0	1 179.0	1 239.0	1 251.5	1 281.5	1 319.5	1 344.5	1 364.0	1 424.0	1 471.5
kB	1 124.5	1 149.5	1 201.5	1 251.5	1 295.0	1 355.0	1 380.5	1 410.5	1 466.5	1 491.5	1 592.0	1 652.0	1 696.5
LB	353.5	378.5	399.0	449.0	481.0	541.0	553.5	583.5	621.5	646.5	666.0	726.0	773.5
LBL	426.5	451.5	503.5	553.5	597.0	657.0	682.5	712.5	768.5	793.5	894.0	954.0	998.5

① ISO 4014 ② DIN 5480 ③ DIN 332-D ④ DIN 332 ⑤ Feather key/keyway DIN 6885-1 ⑦ ISO 4762 ⑧ Without locating shoulder +1 mm
⑩ For inner contour see page 5/136 ⑪ Use bores only for foot-mounted design
1) AD depends on the motor options, for other dimensions see page 8/36.

© Siemens AG 2017

K.Z.189 gearbox in a housing flange design

KZ030, KAZ030, KAZS030, KAZT030

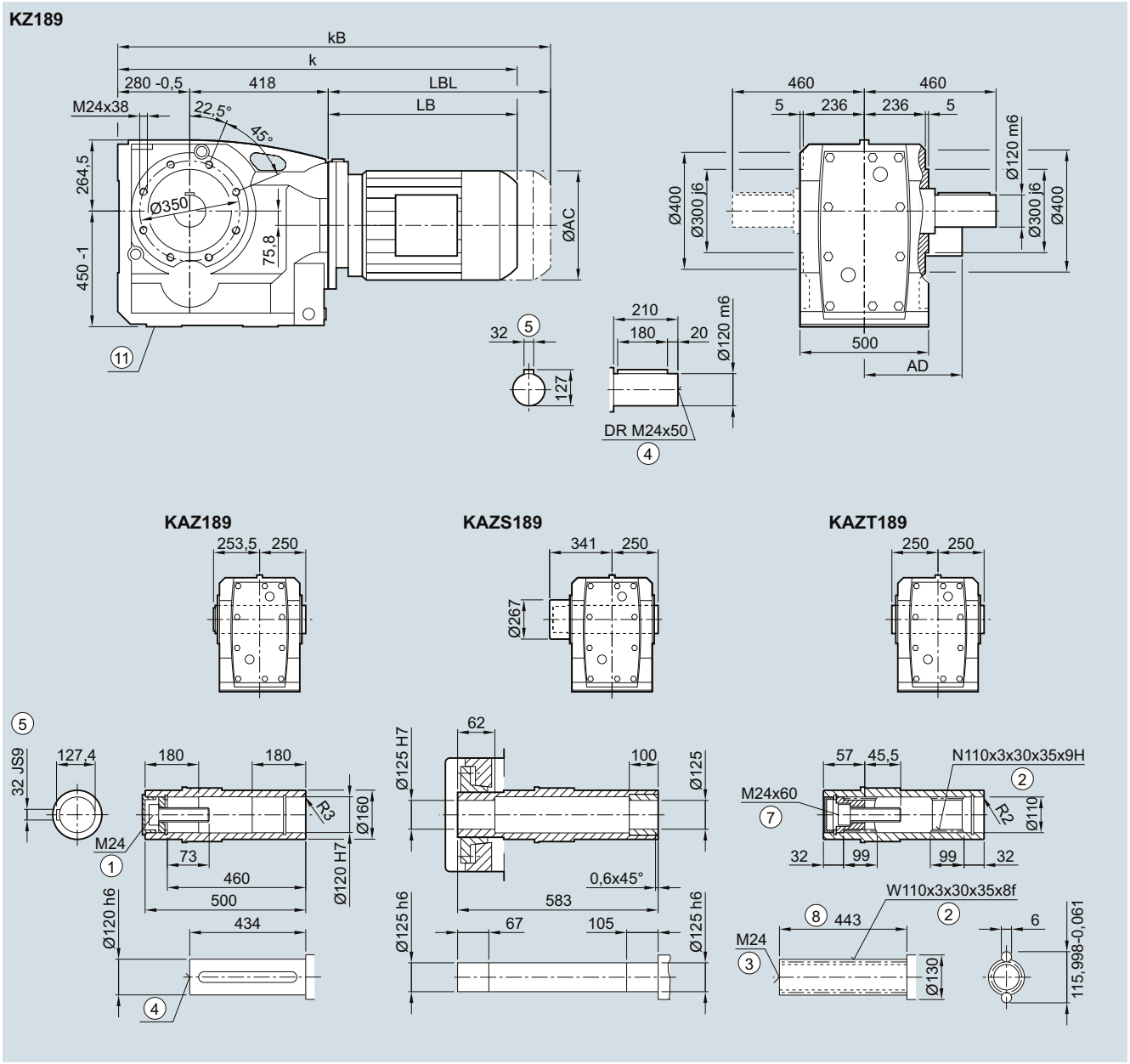

Motor	LE						LES						
	112	112Z	132	132Z	160	160Z	180	180Z	200	200Z	225	225Y	250
AC	222.0	222.0	264.0	264.0	318.0	318.0	352.5	352.5	392.5	392.5	439.0	439.0	487.0
AD[1)]	181.5	181.5	207.0	207.0	241.0	241.0	292.0	292.0	315.0	315.0	382.0	382.0	457.5
k	1 051.5	1 076.5	1 097.0	1 147.0	1 179.0	1 239.0	1 251.5	1 281.5	1 319.5	1 344.5	1 364.0	1 424.0	1 471.5
kB	1 124.5	1 149.5	1 201.5	1 251.5	1 295.0	1 355.0	1 380.5	1 410.5	1 466.5	1 491.5	1 592.0	1 652.0	1 696.5
LB	353.5	378.5	399.0	449.0	481.0	541.0	553.5	583.5	621.5	646.5	666.0	726.0	773.5
LBL	426.5	451.5	503.5	553.5	597.0	657.0	682.5	712.5	768.5	793.5	894.0	954.0	998.5

① ISO 4014 ② DIN 5480 ③ DIN 332-D ④ DIN 332 ⑤ Feather key/keyway DIN 6885-1 ⑦ ISO 4762 ⑧ Without locating shoulder +1 mm
⑪ Use bores only for foot-mounted design

1) AD depends on the motor options, for other dimensions see page 8/36.

© Siemens AG 2017

KAD.189 gearbox in a shaft-mounted design

KAD031, KADS031, KADT031

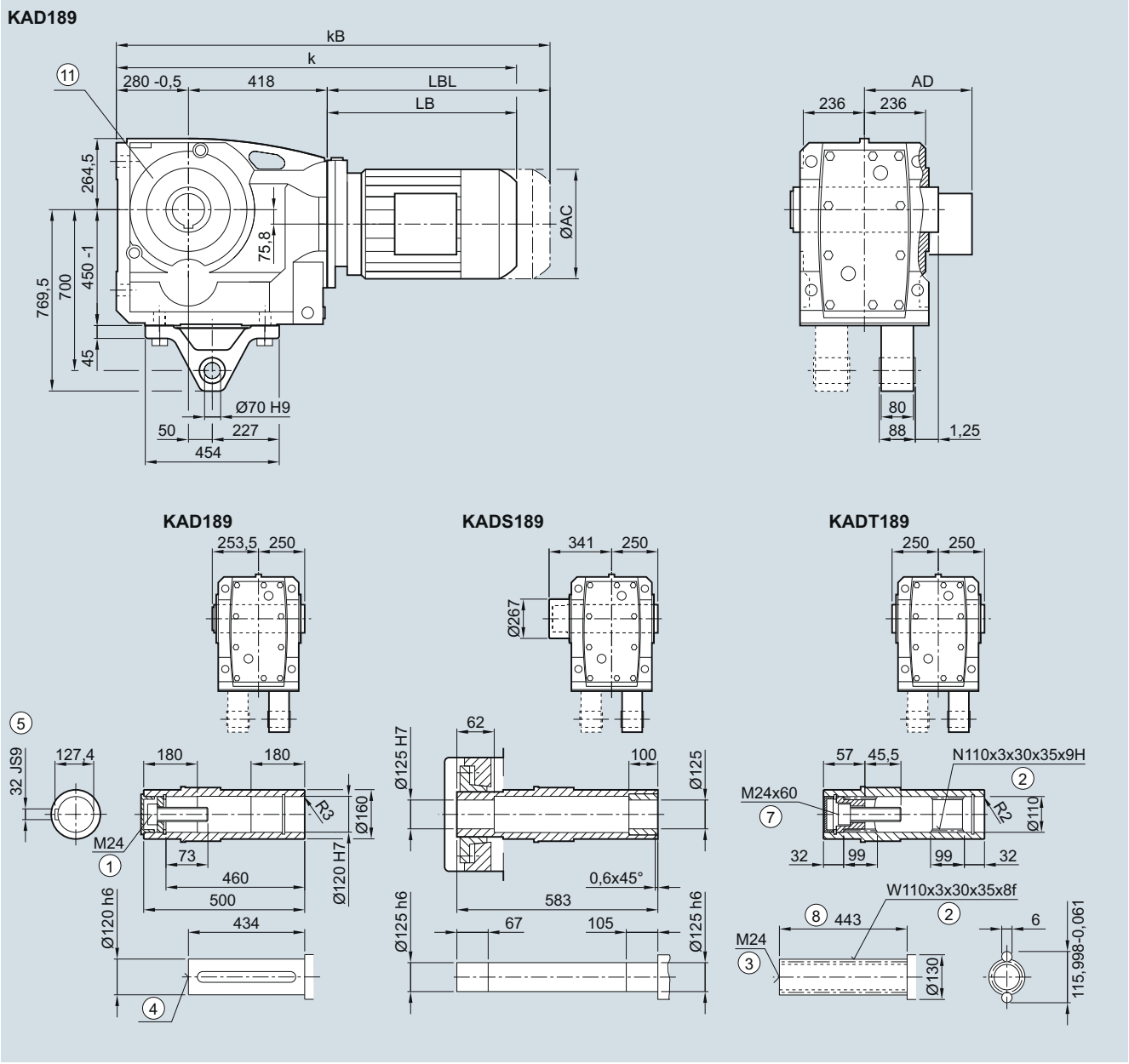

Motor	LE 112	112Z	132	132Z	160	160Z	LES 180	180Z	200	200Z	225	225Y	250
AC	222.0	222.0	264.0	264.0	318.0	318.0	352.5	352.5	392.5	392.5	439.0	439.0	487.0
AD[1)]	181.5	181.5	207.0	207.0	241.0	241.0	292.0	292.0	315.0	315.0	382.0	382.0	457.5
k	1 051.5	1 076.5	1 097.0	1 147.0	1 179.0	1 239.0	1 251.5	1 281.5	1 319.5	1 344.5	1 364.0	1 424.0	1 471.5
kB	1 124.5	1 149.5	1 201.5	1 251.5	1 295.0	1 355.0	1 380.5	1 410.5	1 466.5	1 491.5	1 592.0	1 652.0	1 696.5
LB	353.5	378.5	399.0	449.0	481.0	541.0	553.5	583.5	621.5	646.5	666.0	726.0	773.5
LBL	426.5	451.5	503.5	553.5	597.0	657.0	682.5	712.5	768.5	793.5	894.0	954.0	998.5

① ISO 4014 ② DIN 5480 ③ DIN 332-D ④ DIN 332 ⑤ Feather key/keyway DIN 6885-1 ⑦ ISO 4762 ⑧ Without locating shoulder +1 mm
⑪ Use bores only for housing flange design
1) AD depends on the motor options, for other dimensions see page 8/36.

© Siemens AG 2017

Bevel tandem geared motors

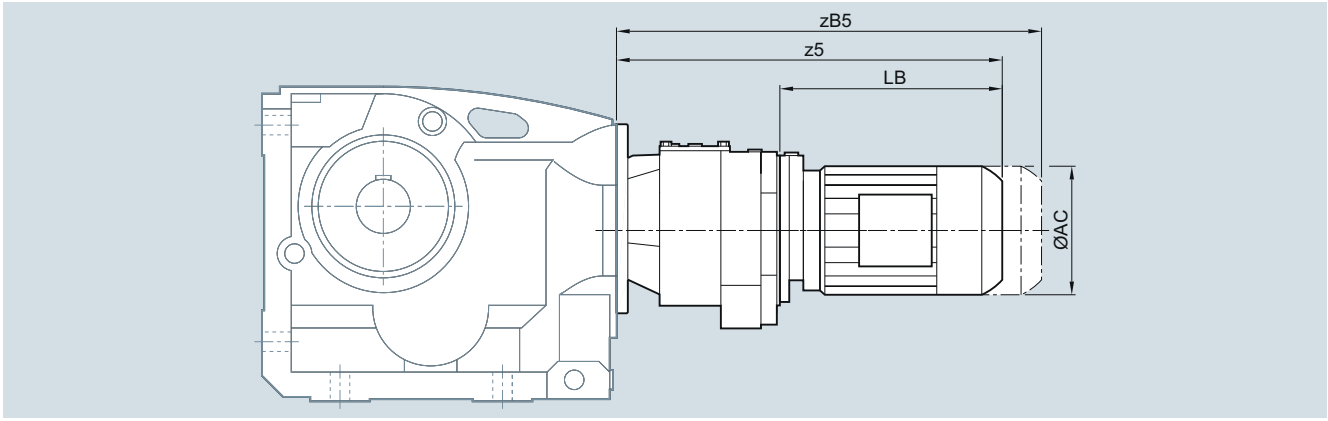

Gearbox	Motor	AC	z5	zB5	LB
K.39-D/Z19	LA63	117.8	331.0	375.5	160.5
	LA71	138.8	363.0	418.0	184.5
	LA71Z	138.8	382.0	437.0	203.5
K.49-D/Z19	LA63	117.8	322.0	366.5	160.5
	LA71	138.8	354.0	409.0	184.5
	LA71Z	138.8	373.0	428.0	203.5
	LE80	156.3	410.0	470.0	240.0
	LE80Z	156.3	445.0	505.0	275.0
K.69-D/Z19	LA63	117.8	322.0	366.5	160.5
	LA71	138.8	354.0	409.0	184.5
	LA71Z	138.8	373.0	428.0	203.5
	LE80	156.3	410.0	470.0	240.0
	LE80Z	156.3	445.0	505.0	275.0
K.79-D/Z19	LA63	117.8	322.0	366.5	160.5
	LA71	138.8	354.0	409.0	184.5
	LA71Z	138.8	373.0	428.0	203.5
	LE80	156.3	410.0	470.0	240.0
	LE80Z	156.3	445.0	505.0	275.0
K.89-D/Z39	LA63	117.8	373.5	418.0	194.0
	LA71	138.8	405.5	460.5	226.0
	LA71Z	138.8	424.5	479.5	245.0
	LE80	156.3	469.5	529.5	290.0
	LE80Z	156.3	504.5	564.5	325.0
	LE90	173.8	531.0	601.0	351.5
	LE90Z	173.8	571.0	641.0	391.5
	LE100	198.0	587.5	666.0	408.0
	LE100Z	198.0	622.5	701.0	443.0
K.109-D/Z39	LA63	117.8	356.5	401.0	194.0
	LA71	138.8	388.5	443.5	226.0
	LA71Z	138.8	407.5	462.5	245.0
	LE80	156.3	452.5	512.5	290.0
	LE80Z	156.3	487.5	547.5	325.0
	LE90	173.8	514.0	584.0	351.5
	LE90Z	173.8	554.0	624.0	391.5
	LE100	198.0	570.5	649.0	408.0
	LE100Z	198.0	605.5	684.0	443.0
	LE112	222.0	580.5	653.5	418.0
	LE112Z	222.0	605.5	678.5	443.0
K.129-D/Z39	LA63	117.8	347.5	392.0	194.0
	LA71	138.8	379.5	434.5	226.0
	LA71Z	138.8	398.5	453.5	245.0
	LE80	156.3	443.5	503.5	290.0
	LE80Z	156.3	478.5	538.5	325.0
	LE90	173.8	505.0	575.0	351.5

Gearbox	Motor	AC	z5	zB5	LB
K.129-D/Z39	LE90Z	173.8	545.0	615.0	391.5
	LE100	198.0	561.5	640.0	408.0
	LE100Z	198.0	596.5	675.0	443.0
	LE112	222.0	571.5	644.5	418.0
	LE112Z	222.0	596.5	669.5	443.0
K.149-D/Z49	LA63	117.8	376.5	421.0	184.5
	LA71	138.8	408.5	463.5	216.5
	LA71Z	138.8	427.5	482.5	235.5
	LE80	156.3	472.5	532.5	280.5
	LE80Z	156.3	507.5	567.5	315.5
	LE90	173.8	534.0	604.0	342.0
	LE90Z	173.8	574.0	644.0	382.0
	LE100	198.0	590.5	669.0	398.5
	LE100Z	198.0	625.5	704.0	433.5
	LE112	222.0	600.5	673.5	408.5
	LE112Z	222.0	635.0	708.0	443.0
	LE132	264.0	653.5	758.0	461.5
	LE132Z	264.0	703.5	808.0	511.5
K.169-D/Z49	LA63	117.8	366.0	410.5	184.5
	LA71	138.8	398.0	453.0	216.5
	LA71Z	138.8	417.5	472.5	235.5
	LE80	156.3	462.0	522.0	280.5
	LE80Z	156.3	497.0	557.0	315.5
	LE90	173.8	523.5	593.5	342.0
	LE90Z	173.8	563.5	633.5	382.0
	LE100	198.0	580.0	658.5	398.5
	LE100Z	198.0	615.0	693.5	433.5
	LE112	222.0	590.0	663.0	408.5
	LE112Z	222.0	624.5	697.5	443.0
	LE132	264.0	643.0	747.5	461.5
	LE132Z	264.0	693.0	797.5	511.5
K.189-D/Z69	LA63	117.8	391.5	436.0	184.5
	LA71	138.8	423.5	478.5	216.5
	LA71Z	138.8	442.5	497.5	235.5
	LE80	156.3	487.5	547.5	280.5
	LE80Z	156.3	522.5	582.5	315.5
	LE90	173.8	549	619.0	342.0
	LE90Z	173.8	589	659.0	382.0
	LE100	198.0	605.5	684.0	398.5
	LE100Z	198.0	640.5	719.0	433.5
	LE112	222.0	615.5	688.5	408.5
	LE112Z	222.0	650	723.0	443.0
	LE132	264.0	668.5	773.0	461.5
	LE132Z	264.0	718.5	823.0	511.5

© Siemens AG 2017

SIMOLOC assembly system

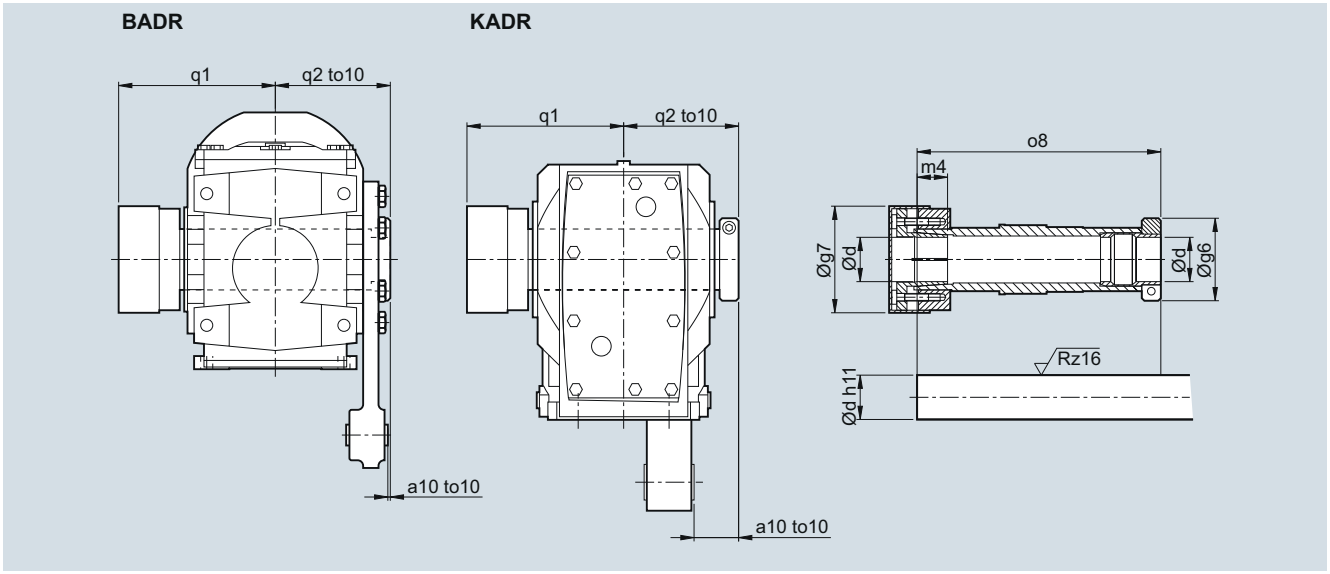

Note mounting tolerance to10 when positioning the torque arm.

d	g6	g7	m4	o8	q1	q2	a10	to10
BADR29								
20	58.5	56	18.5	151	102	75	11	+2.1
1"								+0.6
0.75"								
BADR39								
30	62.0	76	22	180.5	116	85	2.5	+2.2
25								+0.7
1.25"								
1.1875"								
1"								
BADR49								
35	65.0	84	24	210.0	134	100	-2.5	+2.6
30								+0.8
1.375"								
1.4375"								
1.25"								
1.1875"								
40	79.5	94	30	220	140	104	1.5	
1.625"								
KADR39								
30	62.0	76	22	160.5	106	75	39	+2.2
25								+0.7
1.25"								
1.1875"								
1"								
KADR49								
35	65.0	84	24	192.0	124	90	41	+2.6
30								+0.8
1.375"								
1.4375"								
1.25"								
1.1875"								

© Siemens AG 2017

SIMOLOC assembly system (continued)

d	g6	g7	m4	o8	q1	q2	a10	to10
KADR69								
40	79.5	94	30	217.5	138	102	39	+2.5
35								+0.7
1.5"								
1.625"								
1.4375"								
1.375"								
KADR79								
40	79.5	94	30	232.0	150	109	46	+3.2
35								+1.4
1.5"								
1.625"								
1.4375"								
1.375"								
KADR89								
50	89.0	114	32	264.0	171	124	45	+3.4
40								+1.5
2"								
1.9375"								
1.75"								
1.625"								

© Siemens AG 2017

5

Protection covers

Protection cover for hollow shaft

BA, BAF, BAZ, BAD

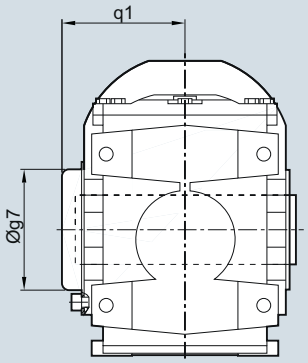

KA[1], KAF, KAZ, KAD

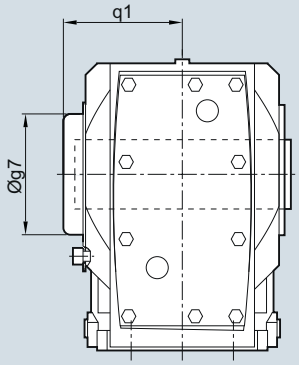

Gearbox type	BA.19	BA.29	BA.39	BA.49	KA.39	KA.49	KA.69	KA.79	KA.89	KA.109	KA.129	KA.149	KA.169	KA.189
Protection cover														
g7	82.0	67.0	80.0	80.0	82.5	80.0	99.0	99.0	137.0	187.0	187.0	218.0	257.5	309.5
q1	57.5	76.0	96.0	111.0	73.0	99.0	95.0	101.5	124.5	168.0	198.0	250.0	313.0	373.5

Protection cover for hollow shaft with shrink disk

BAS, BAFS, BAZS, BADS

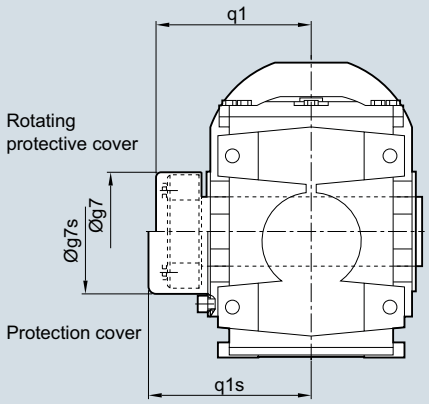

KAFS,KAZS,KADS

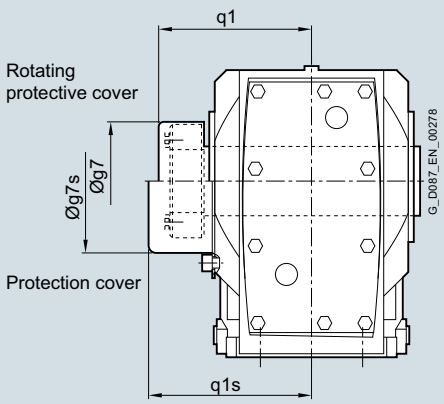

Gearbox type	BA..29	BA..39	BA..49	KA..39	KA..49	KA..69	KA..79	KA..89	KA..109	KA..129	KA..149	KA..169	KA..189
Rotating protective cover with shrink disk version													
g7	55	84	84	76.0	84	84	94.0	119.0	142.0	159.0	201.0	234.0	267.0
q1	85	102	117	89.5	107	115	125.5	142.5	162.5	198.5	233.5	291.0	343.5
Protection cover													
g7s	58	86	86	82.5	86	99	99.0	137.0	187.0	187.0	218.0	257.5	309.5
q1s	91	119	134	109.0	122	126	132.5	176.5	195.0	225.0	250.0	313.0	373.5

[1] KA/KAS version valid only for gearbox sizes 169 and 189

© Siemens AG 2017

Protection covers

Protection cover for hollow shaft with SIMOLOC assembly system

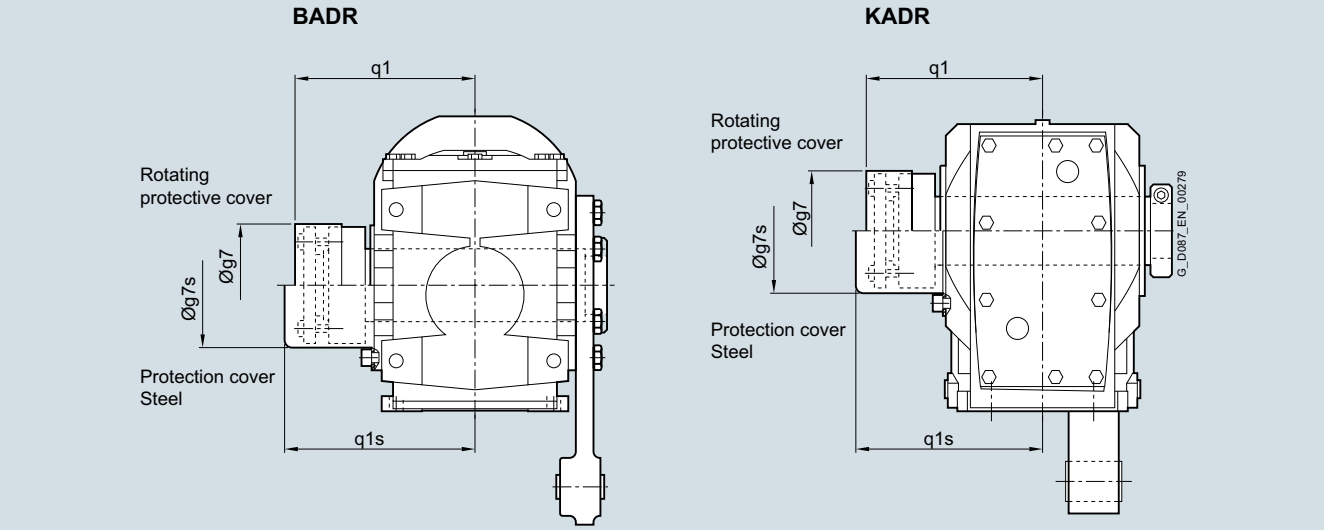

Gearbox type	BADR29	BADR39	BADR49	KADR39	KADR49	KADR69	KADR79	KADR89
Rotating protective cover								
g7	56	76	84 (94)	76	84	94	94	114
q1	102	116	134 (140)	106	124	138	150	171
Protection cover								
g7s	58	86.0	86 (99)	82.5	86	99	99	137
q1s	102	119.0	138 (143)	109	126	145	151.5	176.5

() Dimension in brackets for hollow shaft d=40 and d=1.625"

© Siemens AG 2017

Inner contour of the flange design

Notes regarding the design of the customer's interface for the solid shaft design

BF, KF

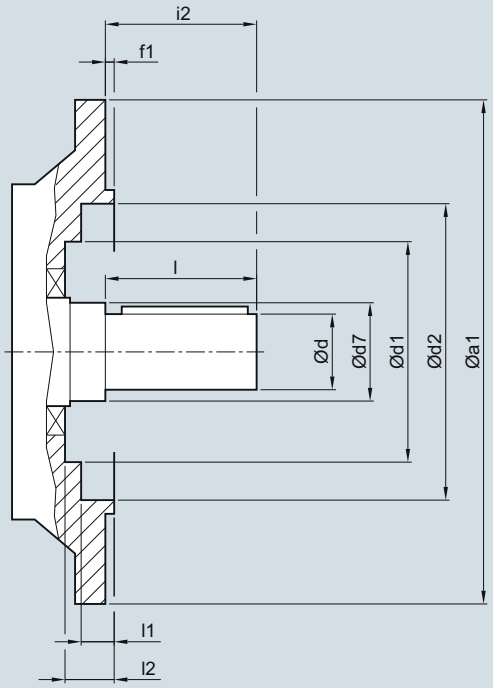

Gearbox type	a1	d	d7	d1	d2	f1	i2	l	l1	l2
BF19	120	20	30	60	68	3.0	40	40	23.5	29.5
BF29	120	20	40	-	70	3.0	40	40	24.0	-
	160	20	40	70	101	3.5	40	40	8.5	24.5
BF39	160	30	55	93	100	3.5	60	60	11.0	31.5
	200	30	55	93	119	3.5	60	60	16.0	31.5
BF49	200	35	55	93	119	3.5	70	70	16.0	31.5
KF39	160	25	30	-	100	3.5	50	50	5.0	-
KF49	200	30	35	-	118	3.5	60	60	5.5	-
KF69	250	35	45	-	165	4.0	70	70	6.5	-
KF79	250	40	55	-	165	4.0	80	80	6.5	-
KF89	300	50	55	-	165	4.0	100	100	8.0	-
KF109	350	60	65	-	235	5.0	120	120	9.0	-
KF129	450	70	75	-	336	5.0	140	140	9.0	-
KF149	450	90	100	-	336	5.0	170	170	10.0	-
KF169	550	110	120	-	427	5.0	210	210	10.0	-
KF189	660	120	160	-	517	6.0	210	210	11.0	-

Notes regarding the design of the customer's interface for the hollow shaft design

BAF., KAF.

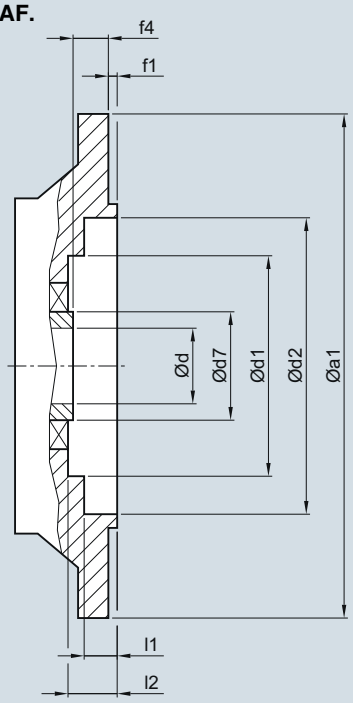

Gearbox type	a1	d	d7	d1	d2	f1	f4	l1	l2
BAF.19	120	20	30	60	68	3.0	30.0	23.5	29.5
BAF.29	120	20/	40	-	70	3.0	20.0	24.0	-
		25							
	160	20	40	70	101	3.5	20.0	8.5	24.5
		25							
BAF.39	160	30	55	93	100	3.5	27.0	11.0	31.5
		35							
		40							
BAF.39	200	30	55	93	119	3.5	27.0	16.0	31.5
		35							
		40							
BAF.49	200	35	55	93	119	3.5	27.0	16.0	31.5
		40							
KAF.39	160	30	45	80	102	3.5	24.0	2.0	29.5
KAF.49	200	35	50	90	120	3.5	25.0	4.0	30.5
KAF.69	250	40	55	104	165	4.0	23.5	2.0	29.5
KAF.79	250	40	55	104	165	4.0	23.0	2.0	29.5
KAF.89	300	50	70	135	215	4.0	37.0	2.0	44.5
KAF.109	350	60	85	184	210	5.0	36.0	13.0	45.0
KAF.129	450	70	95	184	336	5.0	41.5	16.5	48.5
KAF.149	450	90	120	214	219	5.0	41.0	40.0	50.0
KAF.169	550	100	140	254	426	5.0	56.0	14.5	56.0
KAF.189	660	120	160	306	518	6.0	66.0	6.0	62.0

© Siemens AG 2017

Pin holes

In the case of gearboxes K.Z.109 and K.Z.129, the customer's interface can be pinned on the housing flange (C type).

The output flanges have been designed to ensure the reliable transmission of the permissible torques and radial forces by the bolt connections.

If additional fastening is required, in the case of high shock loads, for example, the existing drilled pin holes can be used.

The gearboxes can also be drilled and pinned together with the machine. The listed dimensions must be complied with.

K.Z.109

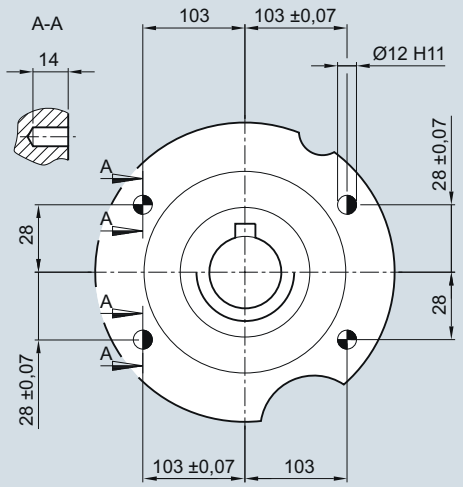

K.Z.129

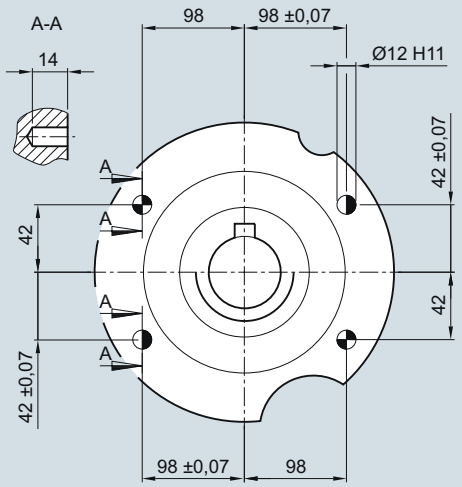

◑ Spring pins, heavy-duty design, to DIN 1481: Use pin holes provided in the housing flange.

◓ Grooved cylindrical pins with chamfer to EN 28740 / ISO 8740: Drill connecting component together with housing.

© Siemens AG 2017

Notes

© Siemens AG 2017

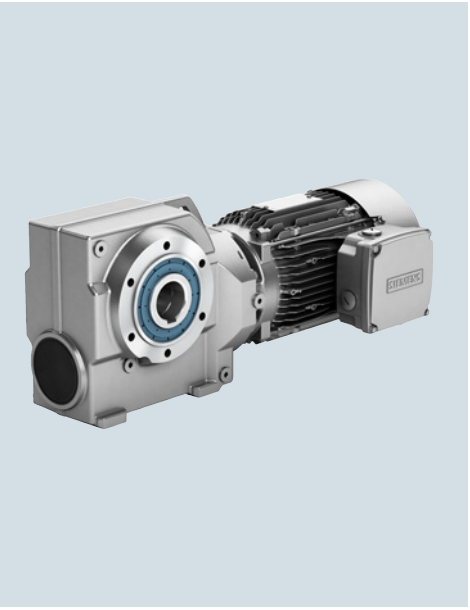

6/2 **Orientation**

6/3 **Geared motors up to 7.5 kW**
6/3 Selection and ordering data

6/20 **Transmission ratios and torques**
6/20 Selection and ordering data

6/25 **Transmission ratios and torques for very low speeds**
6/25 Selection and ordering data

6/30 **Efficiencies**
6/30 Selection and ordering data

6/40 **Dimensions**
6/40 Dimensional drawing overview
6/42 Helical worm geared motors C..29
6/46 Helical worm geared motors C..39
6/50 Helical worm geared motors C..49
6/54 Helical worm geared motors C..69
6/58 Helical worm geared motors C..89
6/62 Helical worm tandem geared motors
6/63 SIMOLOC assembly system

Protection covers
6/64 Protection covers for hollow shaft
6/64 Protection covers for hollow shaft with shrink disk
6/64 Protection covers for hollow shaft with SIMOLOC assembly system
6/65 Inner contour of the flange design

© Siemens AG 2017

Orientation

SIMOGEAR helical worm geared motors C

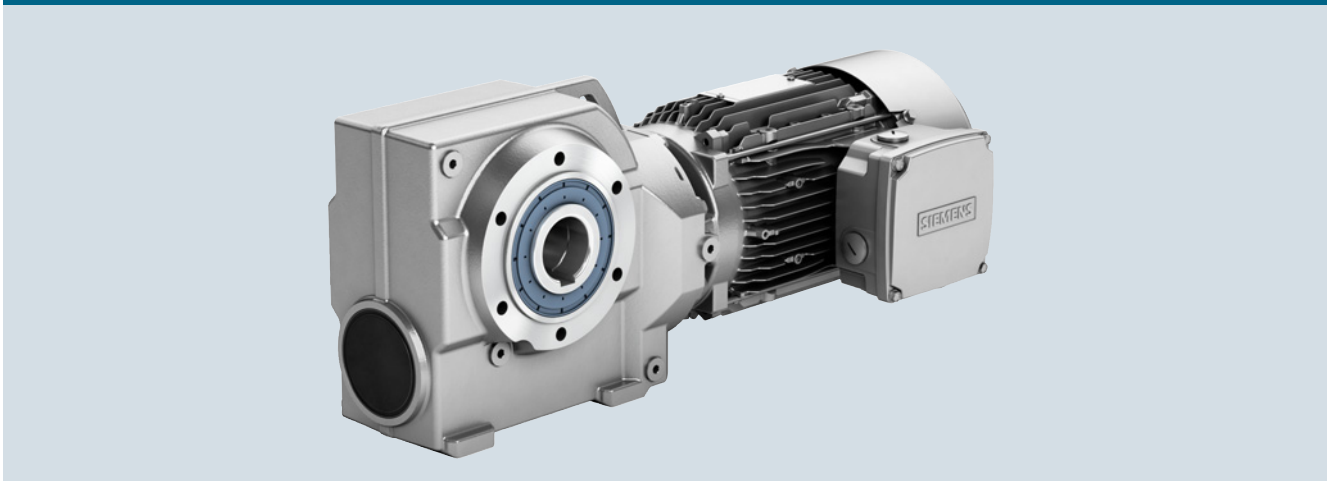

Fig. 6/1 Helical worm gearbox C

Gearbox designation	Number of sizes	Maximum output torque	Transmission ratio	Maximum motor power
		T_{2N}	i	P_1
		Nm	-	kW
C29 … C89 (2-stage)	5	82 … 1 450	6.48 … 363	7.5
C.29-D/Z19 … C.89-D/Z39 (4-stage or 5-stage)	5	80 … 1 310	270 … 19 000	7.5

SIMOGEAR helical worm geared motors are available in the following versions:

Transmission stages

- 2-stage helical worm geared motors
- 4-stage or 5-stage helical worm geared motors for very low output speeds

Designs

- Shaft-mounted design
- Flange-mounted design
- Design with integrated housing flange
- Foot-mounted design

Mounting

- Hollow shaft design with feather key
- Hollow shaft design with shrink disk
- Hollow shaft design with SIMOLOC assembly system
- Solid shaft design with and without feather key (at one end or both ends)

For helical worm gearboxes, the torque arm is supplied loose to enable it to be mounted as required on site. The position of the torque arm can be freely selected.

© Siemens AG 2017

Selection and ordering data

P_{rated} kW	n_2 rpm	T_2 Nm	i -	F_{R2} N	f_B -	m kg	Article No. (Article No. supplement ➞ below)	Order code No. of poles
0.09	**C.49-LA63MF6**							
	2.8	183	299.0	8 730	1.9	20	**2KJ3603 - ■ BD11 - ■ ■ N2**	**P01**
	C.39-LA63MF6							
	2.8	174	299.0	6 250	1.1	14	**2KJ3602 - ■ BD11 - ■ ■ N2**	**P01**
	3.2	158	265.2	6 310	1.2	14	**2KJ3602 - ■ BD11 - ■ ■ M2**	**P01**
	3.7	142	230.1	6 370	1.3	14	**2KJ3602 - ■ BD11 - ■ ■ L2**	**P01**
	4.1	131	209.18	6 410	1.5	14	**2KJ3602 - ■ BD11 - ■ ■ K2**	**P01**
	C.39-LA63MD4							
	4.7	118	299.0	6 460	1.6	14	**2KJ3602 - ■ BB11 - ■ ■ N2**	
	5.3	107	265.2	6 500	1.8	14	**2KJ3602 - ■ BB11 - ■ ■ M2**	
	6.1	95	230.1	6 540	2.0	14	**2KJ3602 - ■ BB11 - ■ ■ L2**	
	C.29-LA63MF6							
	4.1	130	209.18	4 030	0.82	9	**2KJ3601 - ■ BD11 - ■ ■ K2**	**P01**
	4.7	115	179.4	4 100	0.93	9	**2KJ3601 - ■ BD11 - ■ ■ J2**	**P01**
	C.29-LA63MD4							
	5.3	106	265.2	4 150	1.0	8	**2KJ3601 - ■ BB11 - ■ ■ M2**	
	6.1	94	230.1	4 210	1.1	8	**2KJ3601 - ■ BB11 - ■ ■ L2**	
	6.7	87	209.18	4 240	1.2	8	**2KJ3601 - ■ BB11 - ■ ■ K2**	
	7.8	77	179.4	4 290	1.4	8	**2KJ3601 - ■ BB11 - ■ ■ J2**	
	8.6	71	163.09	4 330	1.5	8	**2KJ3601 - ■ BB11 - ■ ■ H2**	
	9.8	63	143.0	4 370	1.7	8	**2KJ3601 - ■ BB11 - ■ ■ G2**	
	11	57	127.64	4 400	1.9	8	**2KJ3601 - ■ BB11 - ■ ■ F2**	
	12	52	113.75	4 420	2.1	8	**2KJ3601 - ■ BB11 - ■ ■ E2**	
	13	48	105.0	4 440	2.3	8	**2KJ3601 - ■ BB11 - ■ ■ D2**	
	15	42	91.93	4 470	2.6	8	**2KJ3601 - ■ BB11 - ■ ■ C2**	
	17	37	80.6	4 500	3.0	8	**2KJ3601 - ■ BB11 - ■ ■ B2**	
	19	34	73.12	4 500	3.2	8	**2KJ3601 - ■ BB11 - ■ ■ A2**	
	20	32	68.82	4 500	3.4	8	**2KJ3601 - ■ BB11 - ■ ■ X1**	
	23	28	60.67	4 500	3.9	8	**2KJ3601 - ■ BB11 - ■ ■ W1**	
	27	24	52.65	4 500	4.5	8	**2KJ3601 - ■ BB11 - ■ ■ V1**	
	28	27	49.87	4 500	3.8	8	**2KJ3601 - ■ BB11 - ■ ■ U1**	
	32	23	43.27	4 500	4.4	8	**2KJ3601 - ■ BB11 - ■ ■ T1**	
	36	21	39.33	4 500	4.8	8	**2KJ3601 - ■ BB11 - ■ ■ S1**	
	43	18	32.64	4 500	5.0	8	**2KJ3601 - ■ BB11 - ■ ■ Q1**	
0.12	**C.49-LA63MG6**							
	3.3	215	299.00	8 730	1.6	20	**2KJ3603 - ■ BE11 - ■ ■ N2**	**P01**
	3.8	196	265.20	8 730	1.8	20	**2KJ3603 - ■ BE11 - ■ ■ M2**	**P01**
	4.3	175	230.10	8 730	2.0	20	**2KJ3603 - ■ BE11 - ■ ■ L2**	**P01**
	C.39-LA63MG6							
	3.3	205	299.00	6 130	0.93	14	**2KJ3602 - ■ BE11 - ■ ■ N2**	**P01**
	3.8	186	265.20	6 200	1.0	14	**2KJ3602 - ■ BE11 - ■ ■ M2**	**P01**
	4.3	167	230.10	6 270	1.1	14	**2KJ3602 - ■ BE11 - ■ ■ L2**	**P01**
	C.39-LA63ME4							
	4.5	162	299.00	6 290	1.2	14	**2KJ3602 - ■ BC11 - ■ ■ N2**	
	5.1	147	265.20	6 350	1.3	14	**2KJ3602 - ■ BC11 - ■ ■ M2**	
	5.9	131	230.10	6 410	1.5	14	**2KJ3602 - ■ BC11 - ■ ■ L2**	
	6.5	121	209.18	6 450	1.6	14	**2KJ3602 - ■ BC11 - ■ ■ K2**	
	7.5	106	179.40	6 500	1.8	14	**2KJ3602 - ■ BC11 - ■ ■ J2**	
	8.3	97	163.09	6 530	2.0	14	**2KJ3602 - ■ BC11 - ■ ■ H2**	

Article No. supplement		
Shaft design	**1, 5, 6, 7 or 9**	➞ page 10/44
Frequency and voltage	**2 or 9**	➞ page 11/2
Gearbox mounting type	**A, D, F or H**	➞ page 10/37

© Siemens AG 2017

Selection and ordering data (continued)

P_{rated} kW	n_2 rpm	T_2 Nm	i -	F_{R2} N	f_B -	m kg	Article No. (Article No. supplement ➞ below)	Order code No. of poles
0.12	**C.29-LA63MG6**							
	5.6	135	179.40	4 000	0.80	9	**2KJ3601 - ■ BE11 - ■ ■ J2**	**P01**
	C.29-LA63ME4							
	5.9	129	230.10	4 030	0.83	8	**2KJ3601 - ■ BC11 - ■ ■ L2**	
	6.5	120	209.18	4 080	0.91	8	**2KJ3601 - ■ BC11 - ■ ■ K2**	
	7.5	106	179.40	4 150	1.0	8	**2KJ3601 - ■ BC11 - ■ ■ J2**	
	8.3	98	163.09	4 190	1.1	8	**2KJ3601 - ■ BC11 - ■ ■ H2**	
	9.4	87	143.00	4 240	1.3	8	**2KJ3601 - ■ BC11 - ■ ■ G2**	
	11	79	127.64	4 280	1.4	8	**2KJ3601 - ■ BC11 - ■ ■ F2**	
	12	71	113.75	4 330	1.5	8	**2KJ3601 - ■ BC11 - ■ ■ E2**	
	13	66	105.00	4 350	1.7	8	**2KJ3601 - ■ BC11 - ■ ■ D2**	
	15	58	91.93	4 390	1.9	8	**2KJ3601 - ■ BC11 - ■ ■ C2**	
	17	51	80.60	4 430	2.1	8	**2KJ3601 - ■ BC11 - ■ ■ B2**	
	18	47	73.12	4 450	2.4	8	**2KJ3601 - ■ BC11 - ■ ■ A2**	
	20	44	68.82	4 460	2.5	8	**2KJ3601 - ■ BC11 - ■ ■ X1**	
	22	39	60.67	4 490	2.8	8	**2KJ3601 - ■ BC11 - ■ ■ W1**	
	26	34	52.65	4 500	3.3	8	**2KJ3601 - ■ BC11 - ■ ■ V1**	
	27	37	49.87	4 500	2.8	8	**2KJ3601 - ■ BC11 - ■ ■ U1**	
	31	32	43.27	4 500	3.2	8	**2KJ3601 - ■ BC11 - ■ ■ T1**	
	34	30	39.33	4 500	3.5	8	**2KJ3601 - ■ BC11 - ■ ■ S1**	
	40	26	33.73	4 500	4.0	8	**2KJ3601 - ■ BC11 - ■ ■ R1**	
	41	25	32.64	4 500	3.6	8	**2KJ3601 - ■ BC11 - ■ ■ Q1**	
	48	22	28.32	4 500	4.2	8	**2KJ3601 - ■ BC11 - ■ ■ P1**	
	52	20	25.75	4 500	4.6	8	**2KJ3601 - ■ BC11 - ■ ■ N1**	
0.18	**C.69-LA71MG6**							
	2.4	450	360.00	11 100	1.5	30	**2KJ3604 - ■ CD11 - ■ ■ M2**	**P01**
	2.7	410	319.80	11 200	1.6	30	**2KJ3604 - ■ CD11 - ■ ■ L2**	**P01**
	3.0	370	280.80	11 300	1.8	30	**2KJ3604 - ■ CD11 - ■ ■ K2**	**P01**
	3.3	345	255.27	11 400	2.0	30	**2KJ3604 - ■ CD11 - ■ ■ J2**	**P01**
	C.49-LA71MG6							
	2.8	365	299.00	8 370	0.94	21	**2KJ3603 - ■ CD11 - ■ ■ N2**	**P01**
	3.2	330	265.20	8 470	1.0	21	**2KJ3603 - ■ CD11 - ■ ■ M2**	**P01**
	3.7	295	230.10	8 570	1.2	21	**2KJ3603 - ■ CD11 - ■ ■ L2**	**P01**
	4.1	275	209.18	8 630	1.3	21	**2KJ3603 - ■ CD11 - ■ ■ K2**	**P01**
	C.49-LA63MF4							
	4.5	255	299.00	8 690	1.4	20	**2KJ3603 - ■ BD11 - ■ ■ N2**	
	5.1	230	265.20	8 730	1.5	20	**2KJ3603 - ■ BD11 - ■ ■ M2**	
	5.9	200	230.10	8 730	1.7	20	**2KJ3603 - ■ BD11 - ■ ■ L2**	
	6.5	188	209.18	8 730	1.9	20	**2KJ3603 - ■ BD11 - ■ ■ K2**	
	C.39-LA63MF4							
	5.1	220	265.20	6 080	0.87	14	**2KJ3602 - ■ BD11 - ■ ■ M2**	
	5.9	197	230.10	6 160	0.98	14	**2KJ3602 - ■ BD11 - ■ ■ L2**	
	6.5	181	209.18	6 220	1.1	14	**2KJ3602 - ■ BD11 - ■ ■ K2**	
	7.5	159	179.40	6 300	1.2	14	**2KJ3602 - ■ BD11 - ■ ■ J2**	
	8.3	146	163.09	6 350	1.3	14	**2KJ3602 - ■ BD11 - ■ ■ H2**	
	9.4	129	143.00	6 420	1.5	14	**2KJ3602 - ■ BD11 - ■ ■ G2**	
	11	117	127.64	6 460	1.7	14	**2KJ3602 - ■ BD11 - ■ ■ F2**	
	12	104	113.75	6 510	1.9	14	**2KJ3602 - ■ BD11 - ■ ■ E2**	
	13	97	105.00	6 530	2.0	14	**2KJ3602 - ■ BD11 - ■ ■ D2**	

Article No. supplement		
Shaft design	**1, 5, 6, 7 or 9**	➞ page 10/44
Frequency and voltage	**2 or 9**	➞ page 11/2
Gearbox mounting type	**A, D, F or H**	➞ page 10/37

© Siemens AG 2017

Selection and ordering data (continued)

P_{rated}	n_2	T_2	i	F_{R2}	f_B	m	Article No.	Order code
kW	rpm	Nm	-	N	-	kg	(Article No. supplement ➞ below)	No. of poles
0.18	**C.29-LA63MF4**							
	9.4	131	143.00	4 020	0.84	9	**2KJ3601 - ■ BD11 - ■ ■ G2**	
	11	118	127.64	4 090	0.93	9	**2KJ3601 - ■ BD11 - ■ ■ F2**	
	12	107	113.75	4 140	1.0	9	**2KJ3601 - ■ BD11 - ■ ■ E2**	
	13	99	105.00	4 180	1.1	9	**2KJ3601 - ■ BD11 - ■ ■ D2**	
	15	88	91.93	4 240	1.3	9	**2KJ3601 - ■ BD11 - ■ ■ C2**	
	17	77	80.60	4 290	1.4	9	**2KJ3601 - ■ BD11 - ■ ■ B2**	
	18	70	73.12	4 330	1.6	9	**2KJ3601 - ■ BD11 - ■ ■ A2**	
	20	66	68.82	4 350	1.7	9	**2KJ3601 - ■ BD11 - ■ ■ X1**	
	22	58	60.67	4 390	1.9	9	**2KJ3601 - ■ BD11 - ■ ■ W1**	
	26	51	52.65	4 430	2.2	9	**2KJ3601 - ■ BD11 - ■ ■ V1**	
	27	55	49.87	4 410	1.8	9	**2KJ3601 - ■ BD11 - ■ ■ U1**	
	31	48	43.27	4 440	2.1	9	**2KJ3601 - ■ BD11 - ■ ■ T1**	
	34	44	39.33	4 460	2.3	9	**2KJ3601 - ■ BD11 - ■ ■ S1**	
	40	38	33.73	4 490	2.7	9	**2KJ3601 - ■ BD11 - ■ ■ R1**	
	41	37	32.64	4 500	2.4	9	**2KJ3601 - ■ BD11 - ■ ■ Q1**	
	48	32	28.32	4 500	2.8	9	**2KJ3601 - ■ BD11 - ■ ■ P1**	
	52	30	25.75	4 500	3.0	9	**2KJ3601 - ■ BD11 - ■ ■ N1**	
	61	26	22.08	4 500	3.6	9	**2KJ3601 - ■ BD11 - ■ ■ M1**	
	67	23	20.07	4 500	3.9	9	**2KJ3601 - ■ BD11 - ■ ■ L1**	
	77	20	17.60	4 500	4.5	9	**2KJ3601 - ■ BD11 - ■ ■ K1**	
	86	18	15.71	4 500	5.0	9	**2KJ3601 - ■ BD11 - ■ ■ J1**	
0.25	**C.69-LA71MH6**							
	2.4	625	360.00	10 700	1.1	31	**2KJ3604 - ■ CE11 - ■ ■ M2**	**P01**
	2.7	565	319.80	10 900	1.2	31	**2KJ3604 - ■ CE11 - ■ ■ L2**	**P01**
	3.1	510	280.80	11 000	1.3	31	**2KJ3604 - ■ CE11 - ■ ■ K2**	**P01**
	3.4	470	255.27	11 100	1.4	31	**2KJ3604 - ■ CE11 - ■ ■ J2**	**P01**
	C.69-LA71MG4							
	3.8	435	360.00	11 200	1.5	30	**2KJ3604 - ■ CD11 - ■ ■ M2**	
	4.2	390	319.80	11 300	1.7	30	**2KJ3604 - ■ CD11 - ■ ■ L2**	
	4.8	350	280.80	11 400	1.9	30	**2KJ3604 - ■ CD11 - ■ ■ K2**	
	5.3	320	255.27	11 400	2.1	30	**2KJ3604 - ■ CD11 - ■ ■ J2**	
	4.2	330	322.85	8 470	1.1	23	**2KJ3624 - ■ CD11 - ■ ■ A1**	
	C.49-LA71MH6							
	3.7	410	230.10	8 240	0.85	22	**2KJ3603 - ■ CE11 - ■ ■ L2**	**P01**
	4.1	380	209.18	8 330	0.92	22	**2KJ3603 - ■ CE11 - ■ ■ K2**	**P01**
	C.49-LA71MG4							
	4.5	350	299.00	8 410	0.99	21	**2KJ3603 - ■ CD11 - ■ ■ N2**	
	5.1	320	265.20	8 500	1.1	21	**2KJ3603 - ■ CD11 - ■ ■ M2**	
	5.9	280	230.10	8 610	1.2	21	**2KJ3603 - ■ CD11 - ■ ■ L2**	
	6.5	260	209.18	8 670	1.4	21	**2KJ3603 - ■ CD11 - ■ ■ K2**	
	7.5	225	179.40	8 730	1.6	21	**2KJ3603 - ■ CD11 - ■ ■ J2**	
	8.3	205	163.09	8 730	1.7	21	**2KJ3603 - ■ CD11 - ■ ■ H2**	
	9.4	185	143.00	8 730	1.9	21	**2KJ3603 - ■ CD11 - ■ ■ G2**	
	11	165	127.64	8 650	2.1	21	**2KJ3603 - ■ CD11 - ■ ■ F2**	
	C.39-LA71MG4							
	7.5	220	179.40	6 080	0.88	15	**2KJ3602 - ■ CD11 - ■ ■ J2**	
	8.3	200	163.09	6 150	0.95	15	**2KJ3602 - ■ CD11 - ■ ■ H2**	
	9.4	180	143.00	6 230	1.1	15	**2KJ3602 - ■ CD11 - ■ ■ G2**	

Article No. supplement		
Shaft design	**1, 5, 6, 7 or 9**	➞ page 10/44
Frequency and voltage	**2 or 9**	➞ page 11/2
Gearbox mounting type	**A, D, F or H**	➞ page 10/37

© Siemens AG 2017

Selection and ordering data (continued)

P_{rated} kW	n_2 rpm	T_2 Nm	i -	F_{R2} N	f_B -	m kg	Article No. (Article No. supplement ➞ below)	Order code No. of poles
0.25	**C.39-LA71MG4**							
	11	162	127.64	6 290	1.2	15	**2KJ3602 - ■ CD11 - ■ ■ F2**	
	12	145	113.75	6 360	1.3	15	**2KJ3602 - ■ CD11 - ■ ■ E2**	
	13	134	105.00	6 400	1.4	15	**2KJ3602 - ■ CD11 - ■ ■ D2**	
	15	118	91.93	6 460	1.6	15	**2KJ3602 - ■ CD11 - ■ ■ C2**	
	17	103	80.60	6 510	1.9	15	**2KJ3602 - ■ CD11 - ■ ■ B2**	
	18	94	73.12	6 550	2.1	15	**2KJ3602 - ■ CD11 - ■ ■ A2**	
	20	89	68.82	6 560	2.2	15	**2KJ3602 - ■ CD11 - ■ ■ X1**	
	22	78	60.67	6 610	2.4	15	**2KJ3602 - ■ CD11 - ■ ■ W1**	
	27	78	49.87	6 610	2.5	15	**2KJ3602 - ■ CD11 - ■ ■ U1**	
	C.29-LA71MG4							
	13	138	105.00	3 990	0.8	10	**2KJ3601 - ■ CD11 - ■ ■ D2**	
	15	122	91.93	4 070	0.9	10	**2KJ3601 - ■ CD11 - ■ ■ C2**	
	17	107	80.60	4 140	1.0	10	**2KJ3601 - ■ CD11 - ■ ■ B2**	
	18	98	73.12	4 190	1.1	10	**2KJ3601 - ■ CD11 - ■ ■ A2**	
	20	92	68.82	4 220	1.2	10	**2KJ3601 - ■ CD11 - ■ ■ X1**	
	22	81	60.67	4 270	1.4	10	**2KJ3601 - ■ CD11 - ■ ■ W1**	
	26	70	52.65	4 330	1.6	10	**2KJ3601 - ■ CD11 - ■ ■ V1**	
	27	77	49.87	4 290	1.3	10	**2KJ3601 - ■ CD11 - ■ ■ U1**	
	31	67	43.27	4 350	1.5	10	**2KJ3601 - ■ CD11 - ■ ■ T1**	
	34	62	39.33	4 370	1.7	10	**2KJ3601 - ■ CD11 - ■ ■ S1**	
	40	53	33.73	4 420	1.9	10	**2KJ3601 - ■ CD11 - ■ ■ R1**	
	41	52	32.64	4 420	1.7	10	**2KJ3601 - ■ CD11 - ■ ■ Q1**	
	48	45	28.32	4 460	2.0	10	**2KJ3601 - ■ CD11 - ■ ■ P1**	
	52	41	25.75	4 480	2.2	10	**2KJ3601 - ■ CD11 - ■ ■ N1**	
	61	36	22.08	4 500	2.6	10	**2KJ3601 - ■ CD11 - ■ ■ M1**	
	67	32	20.07	4 500	2.8	10	**2KJ3601 - ■ CD11 - ■ ■ L1**	
	77	28	17.60	4 500	3.2	10	**2KJ3601 - ■ CD11 - ■ ■ K1**	
	86	25	15.71	4 500	3.6	10	**2KJ3601 - ■ CD11 - ■ ■ J1**	
	96	23	14.00	4 500	4.1	10	**2KJ3601 - ■ CD11 - ■ ■ H1**	
	104	21	12.92	4 500	4.4	10	**2KJ3601 - ■ CD11 - ■ ■ G1**	
0.37	**C.69-LA71MH4**							
	3.8	635	360.00	10 700	1.1	31	**2KJ3604 - ■ CE11 - ■ ■ M2**	
	4.3	575	319.80	10 800	1.2	31	**2KJ3604 - ■ CE11 - ■ ■ L2**	
	4.9	510	280.80	11 000	1.3	31	**2KJ3604 - ■ CE11 - ■ ■ K2**	
	5.4	470	255.27	11 100	1.4	31	**2KJ3604 - ■ CE11 - ■ ■ J2**	
	6.3	410	218.40	11 200	1.6	31	**2KJ3604 - ■ CE11 - ■ ■ H2**	
	6.9	375	198.55	11 300	1.8	31	**2KJ3604 - ■ CE11 - ■ ■ G2**	
	7.8	330	175.50	11 400	2.0	31	**2KJ3604 - ■ CE11 - ■ ■ F2**	
	8.6	300	159.55	11 500	2.1	31	**2KJ3604 - ■ CE11 - ■ ■ E2**	
	C.49-LA71MH4							
	6.0	415	230.10	8 220	0.84	22	**2KJ3603 - ■ CE11 - ■ ■ L2**	
	6.5	380	209.18	8 330	0.93	22	**2KJ3603 - ■ CE11 - ■ ■ K2**	
	7.6	330	179.40	8 470	1.1	22	**2KJ3603 - ■ CE11 - ■ ■ J2**	
	8.4	305	163.09	8 480	1.2	22	**2KJ3603 - ■ CE11 - ■ ■ H2**	
	9.6	265	143.00	8 300	1.3	22	**2KJ3603 - ■ CE11 - ■ ■ G2**	
	11	240	127.64	8 090	1.5	22	**2KJ3603 - ■ CE11 - ■ ■ F2**	
	12	215	113.75	7 900	1.6	22	**2KJ3603 - ■ CE11 - ■ ■ E2**	
	13	199	105.00	7 760	1.8	22	**2KJ3603 - ■ CE11 - ■ ■ D2**	

Article No. supplement		
Shaft design	**1, 5, 6, 7 or 9**	➞ page 10/44
Frequency and voltage	**2 or 9**	➞ page 11/2
Gearbox mounting type	**A, D, F or H**	➞ page 10/37

© Siemens AG 2017

Selection and ordering data (continued)

P_{rated}	n_2	T_2	i	F_{R2}	f_B	m	Article No.	Order code
kW	rpm	Nm	-	N	-	kg	(Article No. supplement ➞ below)	No. of poles
0.37	**C.49-LA71MH4**							
	15	175	91.93	7 530	2.0	22	**2KJ3603 - ■ CE11 - ■ ■ C2**	
	17	154	80.60	7 290	2.2	22	**2KJ3603 - ■ CE11 - ■ ■ B2**	
	19	139	73.12	7 130	2.3	22	**2KJ3603 - ■ CE11 - ■ ■ A2**	
	C.39-LA71MH4							
	11	235	127.64	6 020	0.82	16	**2KJ3602 - ■ CE11 - ■ ■ F2**	
	12	210	113.75	6 110	0.92	16	**2KJ3602 - ■ CE11 - ■ ■ E2**	
	13	196	105.00	6 170	0.99	16	**2KJ3602 - ■ CE11 - ■ ■ D2**	
	15	172	91.93	6 260	1.1	16	**2KJ3602 - ■ CE11 - ■ ■ C2**	
	17	151	80.60	6 330	1.3	16	**2KJ3602 - ■ CE11 - ■ ■ B2**	
	19	137	73.12	6 390	1.4	16	**2KJ3602 - ■ CE11 - ■ ■ A2**	
	20	129	68.82	6 420	1.5	16	**2KJ3602 - ■ CE11 - ■ ■ X1**	
	23	114	60.67	6 470	1.6	16	**2KJ3602 - ■ CE11 - ■ ■ W1**	
	26	99	52.65	6 530	1.8	16	**2KJ3602 - ■ CE11 - ■ ■ V1**	
	27	114	49.87	6 470	1.7	16	**2KJ3602 - ■ CE11 - ■ ■ U1**	
	32	99	43.27	6 530	2.0	16	**2KJ3602 - ■ CE11 - ■ ■ T1**	
	35	90	39.33	6 560	2.2	16	**2KJ3602 - ■ CE11 - ■ ■ S1**	
	41	77	33.73	6 610	2.6	16	**2KJ3602 - ■ CE11 - ■ ■ R1**	
	C.29-LA71MH4							
	20	134	68.82	4 010	0.82	11	**2KJ3601 - ■ CE11 - ■ ■ X1**	
	23	118	60.67	4 090	0.93	11	**2KJ3601 - ■ CE11 - ■ ■ W1**	
	26	103	52.65	4 160	1.1	11	**2KJ3601 - ■ CE11 - ■ ■ V1**	
	27	112	49.87	4 120	0.91	11	**2KJ3601 - ■ CE11 - ■ ■ U1**	
	32	98	43.27	4 190	1.0	11	**2KJ3601 - ■ CE11 - ■ ■ T1**	
	35	90	39.33	4 230	1.1	11	**2KJ3601 - ■ CE11 - ■ ■ S1**	
	41	78	33.73	4 290	1.3	11	**2KJ3601 - ■ CE11 - ■ ■ R1**	
	42	76	32.64	4 300	1.2	11	**2KJ3601 - ■ CE11 - ■ ■ Q1**	
	48	66	28.32	4 350	1.4	11	**2KJ3601 - ■ CE11 - ■ ■ P1**	
	53	60	25.75	4 380	1.5	11	**2KJ3601 - ■ CE11 - ■ ■ N1**	
	62	52	22.08	4 420	1.8	11	**2KJ3601 - ■ CE11 - ■ ■ M1**	
	68	47	20.07	4 450	1.9	11	**2KJ3601 - ■ CE11 - ■ ■ L1**	
	78	42	17.60	4 470	2.2	11	**2KJ3601 - ■ CE11 - ■ ■ K1**	
	87	37	15.71	4 500	2.5	11	**2KJ3601 - ■ CE11 - ■ ■ J1**	
	98	33	14.00	4 500	2.8	11	**2KJ3601 - ■ CE11 - ■ ■ H1**	
	106	30	12.92	4 450	3.0	11	**2KJ3601 - ■ CE11 - ■ ■ G1**	
	121	27	11.31	4 280	3.5	11	**2KJ3601 - ■ CE11 - ■ ■ F1**	
	138	23	9.92	4 140	4.0	11	**2KJ3601 - ■ CE11 - ■ ■ E1**	
	152	21	9.00	4 020	4.4	11	**2KJ3601 - ■ CE11 - ■ ■ D1**	
	162	20	8.47	3 950	4.6	11	**2KJ3601 - ■ CE11 - ■ ■ C1**	
	183	18	7.47	3 800	4.9	11	**2KJ3601 - ■ CE11 - ■ ■ B1**	
0.55	**C.89-Z39-LE80MB4**							
	2.4	1 540	590	16 100	0.80	58	**2KJ3628 - ■ DB21 - ■ ■ D1**	
	2.8	1 340	506	16 300	0.93	58	**2KJ3628 - ■ DB21 - ■ ■ C1**	
	3.3	1 170	436	16 300	1.1	58	**2KJ3628 - ■ DB21 - ■ ■ B1**	
	4.0	990	360	16 300	1.3	58	**2KJ3628 - ■ DB21 - ■ ■ A1**	
	C.89-Z39-LA71ZML4							
	3.8	1 030	360	16 300	1.3	56	**2KJ3628 - ■ CH11 - ■ ■ A1**	
	C.89-LE80MB4							
	4.0	950	363.00	16 300	1.5	53	**2KJ3605 - ■ DB21 - ■ ■ N2**	
	4.4	870	329.73	16 300	1.7	53	**2KJ3605 - ■ DB21 - ■ ■ M2**	

Article No. supplement		
Shaft design	**1, 5, 6, 7 or 9**	➞ page 10/44
Frequency and voltage	**2 or 9**	➞ page 11/2
Gearbox mounting type	**A, D, F or H**	➞ page 10/37

© Siemens AG 2017

Selection and ordering data (continued)

P_{rated}	n_2	T_2	i	F_{R2}	f_B	m	Article No.	Order code
kW	rpm	Nm	-	N	-	kg	(Article No. supplement ➞ below)	No. of poles
0.55	**C.89-LE80MB4**							
	4.9	780	295.75	16 300	1.8	53	**2KJ3605 - ■ DB21 - ■ ■ L2**	
	5.4	705	265.91	16 300	2.0	53	**2KJ3605 - ■ DB21 - ■ ■ K2**	
	C.89-LA71ZML4							
	3.8	995	363.00	16 300	1.5	51	**2KJ3605 - ■ CH11 - ■ ■ N2**	
	4.2	910	329.73	16 300	1.6	51	**2KJ3605 - ■ CH11 - ■ ■ M2**	
	4.6	820	295.75	16 300	1.8	51	**2KJ3605 - ■ CH11 - ■ ■ L2**	
	5.2	740	265.91	16 300	2.0	51	**2KJ3605 - ■ CH11 - ■ ■ K2**	
	5.7	675	240.50	16 300	2.1	51	**2KJ3605 - ■ CH11 - ■ ■ J2**	
	C.69-LA71ZML4							
	4.9	760	280.80	10 400	0.89	31	**2KJ3604 - ■ CH11 - ■ ■ K2**	
	5.4	700	255.27	10 600	0.96	31	**2KJ3604 - ■ CH11 - ■ ■ J2**	
	6.3	610	218.40	10 800	1.1	31	**2KJ3604 - ■ CH11 - ■ ■ H2**	
	6.9	555	198.55	10 900	1.2	31	**2KJ3604 - ■ CH11 - ■ ■ G2**	
	7.8	495	175.50	11 000	1.4	31	**2KJ3604 - ■ CH11 - ■ ■ F2**	
	8.6	450	159.55	11 100	1.4	31	**2KJ3604 - ■ CH11 - ■ ■ E2**	
	9.8	395	139.75	11 300	1.5	31	**2KJ3604 - ■ CH11 - ■ ■ D2**	
	11	365	129.00	11 300	1.6	31	**2KJ3604 - ■ CH11 - ■ ■ C2**	
	12	325	114.21	11 300	1.7	31	**2KJ3604 - ■ CH11 - ■ ■ B2**	
	13	335	102.50	10 600	2.0	31	**2KJ3604 - ■ CH11 - ■ ■ A2**	
	C.69-LE80MB4							
	4.5	815	319.80	10 300	0.82	34	**2KJ3604 - ■ DB21 - ■ ■ L2**	
	5.1	725	280.80	10 500	0.93	34	**2KJ3604 - ■ DB21 - ■ ■ K2**	
	5.6	665	255.27	10 600	1.0	34	**2KJ3604 - ■ DB21 - ■ ■ J2**	
	6.6	580	218.40	10 800	1.2	34	**2KJ3604 - ■ DB21 - ■ ■ H2**	
	7.3	530	198.55	11 000	1.3	34	**2KJ3604 - ■ DB21 - ■ ■ G2**	
	8.2	470	175.50	11 100	1.4	34	**2KJ3604 - ■ DB21 - ■ ■ F2**	
	9	430	159.55	11 200	1.5	34	**2KJ3604 - ■ DB21 - ■ ■ E2**	
	10	375	139.75	11 300	1.6	34	**2KJ3604 - ■ DB21 - ■ ■ D2**	
	11	345	129.00	11 400	1.6	34	**2KJ3604 - ■ DB21 - ■ ■ C2**	
	13	305	114.21	11 200	1.7	34	**2KJ3604 - ■ DB21 - ■ ■ B2**	
	14	320	102.50	10 500	2.1	34	**2KJ3604 - ■ DB21 - ■ ■ A2**	
	C.49-LE80MB4							
	8.8	430	163.09	7 460	0.82	25	**2KJ3603 - ■ DB21 - ■ ■ H2**	
	10	380	143.00	7 360	0.93	25	**2KJ3603 - ■ DB21 - ■ ■ G2**	
	11	340	127.64	7 260	1.0	25	**2KJ3603 - ■ DB21 - ■ ■ F2**	
	13	305	113.75	7 130	1.2	25	**2KJ3603 - ■ DB21 - ■ ■ E2**	
	14	280	105.00	7 060	1.3	25	**2KJ3603 - ■ DB21 - ■ ■ D2**	
	16	245	91.93	6 910	1.4	25	**2KJ3603 - ■ DB21 - ■ ■ C2**	
	18	215	80.60	6 740	1.5	25	**2KJ3603 - ■ DB21 - ■ ■ B2**	
	20	197	73.12	6 600	1.6	25	**2KJ3603 - ■ DB21 - ■ ■ A2**	
	21	185	68.82	6 530	1.6	25	**2KJ3603 - ■ DB21 - ■ ■ X1**	
	24	163	60.67	6 350	1.7	25	**2KJ3603 - ■ DB21 - ■ ■ W1**	
	27	142	52.65	6 150	1.9	25	**2KJ3603 - ■ DB21 - ■ ■ V1**	
	29	162	49.87	5 620	2.0	25	**2KJ3603 - ■ DB21 - ■ ■ U1**	
	33	141	43.27	5 470	2.5	25	**2KJ3603 - ■ DB21 - ■ ■ T1**	
	C.49-LA71ZML4							
	9.6	400	143.00	7 390	0.89	22	**2KJ3603 - ■ CH11 - ■ ■ G2**	
	11	355	127.64	7 320	0.99	22	**2KJ3603 - ■ CH11 - ■ ■ F2**	
	12	320	113.75	7 190	1.1	22	**2KJ3603 - ■ CH11 - ■ ■ E2**	

Article No. supplement		
Shaft design	**1, 5, 6, 7 or 9**	➞ page 10/44
Frequency and voltage	**2 or 9**	➞ page 11/2
Gearbox mounting type	**A, D, F or H**	➞ page 10/37

© Siemens AG 2017

Selection and ordering data (continued)

P_{rated}	n_2	T_2	i	F_{R2}	f_B	m	Article No.	Order code
kW	rpm	Nm	-	N	-	kg	(Article No. supplement ➞ below)	No. of poles
0.55	**C.49-LA71ZML4**							
	13	295	105.00	7 110	1.2	22	**2KJ3603 - ■ CH11 - ■ ■ D2**	
	15	260	91.93	6 950	1.4	22	**2KJ3603 - ■ CH11 - ■ ■ C2**	
	17	225	80.60	6 810	1.5	22	**2KJ3603 - ■ CH11 - ■ ■ B2**	
	19	205	73.12	6 680	1.5	22	**2KJ3603 - ■ CH11 - ■ ■ A2**	
	20	195	68.82	6 590	1.6	22	**2KJ3603 - ■ CH11 - ■ ■ X1**	
	23	172	60.67	6 420	1.7	22	**2KJ3603 - ■ CH11 - ■ ■ W1**	
	26	149	52.65	6 220	1.8	22	**2KJ3603 - ■ CH11 - ■ ■ V1**	
	27	170	49.87	5 670	1.9	22	**2KJ3603 - ■ CH11 - ■ ■ U1**	
	32	148	43.27	5 530	2.4	22	**2KJ3603 - ■ CH11 - ■ ■ T1**	
	C.39-LE80MB4							
	16	240	91.93	6 000	0.80	19	**2KJ3602 - ■ DB21 - ■ ■ C2**	
	18	210	80.60	6 110	0.91	19	**2KJ3602 - ■ DB21 - ■ ■ B2**	
	20	194	73.12	6 170	1.0	19	**2KJ3602 - ■ DB21 - ■ ■ A2**	
	21	183	68.82	6 210	1.1	19	**2KJ3602 - ■ DB21 - ■ ■ X1**	
	24	161	60.67	6 300	1.1	19	**2KJ3602 - ■ DB21 - ■ ■ W1**	
	27	140	52.65	6 370	1.2	19	**2KJ3602 - ■ DB21 - ■ ■ V1**	
	29	162	49.87	6 290	1.2	19	**2KJ3602 - ■ DB21 - ■ ■ U1**	
	33	140	43.27	6 370	1.4	19	**2KJ3602 - ■ DB21 - ■ ■ T1**	
	37	127	39.33	6 420	1.6	19	**2KJ3602 - ■ DB21 - ■ ■ S1**	
	43	109	33.73	6 490	1.8	19	**2KJ3602 - ■ DB21 - ■ ■ R1**	
	44	108	32.64	6 490	2.0	19	**2KJ3602 - ■ DB21 - ■ ■ Q1**	
	51	94	28.32	6 290	2.5	19	**2KJ3602 - ■ DB21 - ■ ■ P1**	
	56	86	25.75	6 150	2.7	19	**2KJ3602 - ■ DB21 - ■ ■ N1**	
	C.39-LA71ZML4							
	17	220	80.60	6 080	0.87	16	**2KJ3602 - ■ CH11 - ■ ■ B2**	
	19	200	73.12	6 150	0.95	16	**2KJ3602 - ■ CH11 - ■ ■ A2**	
	20	192	68.82	6 180	1.0	16	**2KJ3602 - ■ CH11 - ■ ■ X1**	
	23	169	60.67	6 270	1.1	16	**2KJ3602 - ■ CH11 - ■ ■ W1**	
	26	147	52.65	6 350	1.2	16	**2KJ3602 - ■ CH11 - ■ ■ V1**	
	27	170	49.87	6 260	1.2	16	**2KJ3602 - ■ CH11 - ■ ■ U1**	
	32	147	43.27	6 350	1.4	16	**2KJ3602 - ■ CH11 - ■ ■ T1**	
	35	134	39.33	6 400	1.5	16	**2KJ3602 - ■ CH11 - ■ ■ S1**	
	41	115	33.73	6 470	1.7	16	**2KJ3602 - ■ CH11 - ■ ■ R1**	
	42	114	32.64	6 470	1.9	16	**2KJ3602 - ■ CH11 - ■ ■ Q1**	
	48	99	28.32	6 360	2.4	16	**2KJ3602 - ■ CH11 - ■ ■ P1**	
	53	90	25.75	6 230	2.6	16	**2KJ3602 - ■ CH11 - ■ ■ N1**	
	62	77	22.08	6 010	3.0	16	**2KJ3602 - ■ CH11 - ■ ■ M1**	
	C.29-LE80MB4							
	37	127	39.33	4 040	0.81	13	**2KJ3601 - ■ DB21 - ■ ■ S1**	
	43	110	33.73	4 130	0.95	13	**2KJ3601 - ■ DB21 - ■ ■ R1**	
	44	107	32.64	4 140	0.84	13	**2KJ3601 - ■ DB21 - ■ ■ Q1**	
	51	93	28.32	4 210	0.96	13	**2KJ3601 - ■ DB21 - ■ ■ P1**	
	56	85	25.75	4 250	1.1	13	**2KJ3601 - ■ DB21 - ■ ■ N1**	
	65	73	22.08	4 310	1.2	13	**2KJ3601 - ■ DB21 - ■ ■ M1**	
	72	67	20.07	4 350	1.4	13	**2KJ3601 - ■ DB21 - ■ ■ L1**	
	82	59	17.60	4 390	1.6	13	**2KJ3601 - ■ DB21 - ■ ■ K1**	
	92	52	15.71	4 370	1.8	13	**2KJ3601 - ■ DB21 - ■ ■ J1**	
	103	47	14.00	4 250	2.0	13	**2KJ3601 - ■ DB21 - ■ ■ H1**	

Article No. supplement		
Shaft design	**1, 5, 6, 7 or 9**	➞ page 10/44
Frequency and voltage	**2 or 9**	➞ page 11/2
Gearbox mounting type	**A, D, F or H**	➞ page 10/37

© Siemens AG 2017

Selection and ordering data (continued)

P_{rated} kW	n_2 rpm	T_2 Nm	i -	F_{R2} N	f_B -	m kg	Article No. (Article No. supplement ➞ below)	Order code No. of poles
0.55	**C.29-LE80MB4**							
	111	43	12.92	4 180	2.2	13	**2KJ3601 - ■ DB21 - ■ ■ G1**	
	127	38	11.31	4 040	2.5	13	**2KJ3601 - ■ DB21 - ■ ■ F1**	
	145	33	9.92	3 920	2.8	13	**2KJ3601 - ■ DB21 - ■ ■ E1**	
	160	30	9.00	3 820	3.0	13	**2KJ3601 - ■ DB21 - ■ ■ D1**	
	170	28	8.47	3 770	3.2	13	**2KJ3601 - ■ DB21 - ■ ■ C1**	
	193	25	7.47	3 640	3.4	13	**2KJ3601 - ■ DB21 - ■ ■ B1**	
	222	22	6.48	3 490	3.8	13	**2KJ3601 - ■ DB21 - ■ ■ A1**	
	C.29-LA71ZML4							
	41	115	33.73	4 100	0.90	11	**2KJ3601 - ■ CH11 - ■ ■ R1**	
	42	112	32.64	4 120	0.80	11	**2KJ3601 - ■ CH11 - ■ ■ Q1**	
	48	98	28.32	4 190	0.92	11	**2KJ3601 - ■ CH11 - ■ ■ P1**	
	53	89	25.75	4 230	1.0	11	**2KJ3601 - ■ CH11 - ■ ■ N1**	
	62	77	22.08	4 290	1.2	11	**2KJ3601 - ■ CH11 - ■ ■ M1**	
	68	70	20.07	4 330	1.3	11	**2KJ3601 - ■ CH11 - ■ ■ L1**	
	78	62	17.60	4 370	1.5	11	**2KJ3601 - ■ CH11 - ■ ■ K1**	
	87	55	15.71	4 410	1.7	11	**2KJ3601 - ■ CH11 - ■ ■ J1**	
	98	49	14.00	4 300	1.9	11	**2KJ3601 - ■ CH11 - ■ ■ H1**	
	106	45	12.92	4 230	2.1	11	**2KJ3601 - ■ CH11 - ■ ■ G1**	
	121	40	11.31	4 090	2.3	11	**2KJ3601 - ■ CH11 - ■ ■ F1**	
	138	35	9.92	3 960	2.7	11	**2KJ3601 - ■ CH11 - ■ ■ E1**	
	152	32	9.00	3 860	2.9	11	**2KJ3601 - ■ CH11 - ■ ■ D1**	
	162	30	8.47	3 810	3.1	11	**2KJ3601 - ■ CH11 - ■ ■ C1**	
	183	26	7.47	3 690	3.3	11	**2KJ3601 - ■ CH11 - ■ ■ B1**	
	211	23	6.48	3 540	3.7	11	**2KJ3601 - ■ CH11 - ■ ■ A1**	
0.75	**C.89-LE90SQ6P**							
	2.8	1 760	329.73	15 700	0.82	58	**2KJ3605 - ■ EC23 - ■ ■ M2**	
	3.1	1 600	295.75	16 000	0.90	58	**2KJ3605 - ■ EC23 - ■ ■ L2**	
	3.5	1 460	265.91	16 200	0.99	58	**2KJ3605 - ■ EC23 - ■ ■ K2**	
	C.89-LE80ZMQ4P							
	4.0	1 290	363.00	16 300	1.1	55	**2KJ3605 - ■ DF23 - ■ ■ N2**	
	4.4	1 170	329.73	16 300	1.2	55	**2KJ3605 - ■ DF23 - ■ ■ M2**	
	4.9	1 060	295.75	16 300	1.4	55	**2KJ3605 - ■ DF23 - ■ ■ L2**	
	5.5	960	265.91	16 300	1.5	55	**2KJ3605 - ■ DF23 - ■ ■ K2**	
	6.0	870	240.50	16 300	1.7	55	**2KJ3605 - ■ DF23 - ■ ■ J2**	
	6.5	805	222.00	16 300	1.8	55	**2KJ3605 - ■ DF23 - ■ ■ H2**	
	7.1	735	203.36	16 300	2.0	55	**2KJ3605 - ■ DF23 - ■ ■ G2**	
	C.69-LE80ZMQ4P							
	6.6	785	218.40	10 400	0.86	36	**2KJ3604 - ■ DF23 - ■ ■ H2**	
	7.3	720	198.55	10 500	0.94	36	**2KJ3604 - ■ DF23 - ■ ■ G2**	
	8.3	640	175.50	10 700	1.0	36	**2KJ3604 - ■ DF23 - ■ ■ F2**	
	9.1	580	159.55	10 800	1.1	36	**2KJ3604 - ■ DF23 - ■ ■ E2**	
	10	510	139.75	11 000	1.2	36	**2KJ3604 - ■ DF23 - ■ ■ D2**	
	11	470	129.00	10 800	1.2	36	**2KJ3604 - ■ DF23 - ■ ■ C2**	
	13	415	114.21	10 600	1.3	36	**2KJ3604 - ■ DF23 - ■ ■ B2**	
	14	435	102.50	9 790	1.5	36	**2KJ3604 - ■ DF23 - ■ ■ A2**	
	16	385	90.00	9 560	1.8	36	**2KJ3604 - ■ DF23 - ■ ■ X1**	
	18	350	81.82	9 400	1.9	36	**2KJ3604 - ■ DF23 - ■ ■ W1**	
	21	300	70.00	9 120	2.2	36	**2KJ3604 - ■ DF23 - ■ ■ V1**	
	23	270	63.64	8 960	2.3	36	**2KJ3604 - ■ DF23 - ■ ■ U1**	

Article No. supplement		
Shaft design	**1, 5, 6, 7 or 9**	➞ page 10/44
Frequency and voltage	**2 or 9**	➞ page 11/2
Gearbox mounting type	**A, D, F or H**	➞ page 10/37

© Siemens AG 2017

Selection and ordering data (continued)

P_{rated}	n_2	T_2	i	F_{R2}	f_B	m	Article No.	Order code
kW	rpm	Nm	-	N	-	kg	(Article No. supplement ➞ below)	No. of poles
0.75	**C.49-LE80ZMQ4P**							
	13	410	113.75	6 400	0.86	27	**2KJ3603 - ■ DF23 - ■ ■ E2**	
	14	380	105.00	6 360	0.93	27	**2KJ3603 - ■ DF23 - ■ ■ D2**	
	16	335	91.93	6 280	1.0	27	**2KJ3603 - ■ DF23 - ■ ■ C2**	
	18	290	80.60	6 220	1.1	27	**2KJ3603 - ■ DF23 - ■ ■ B2**	
	20	265	73.12	6 130	1.2	27	**2KJ3603 - ■ DF23 - ■ ■ A2**	
	21	250	68.82	6 070	1.2	27	**2KJ3603 - ■ DF23 - ■ ■ X1**	
	24	220	60.67	5 950	1.3	27	**2KJ3603 - ■ DF23 - ■ ■ W1**	
	28	192	52.65	5 800	1.4	27	**2KJ3603 - ■ DF23 - ■ ■ V1**	
	29	220	49.87	5 110	1.5	27	**2KJ3603 - ■ DF23 - ■ ■ U1**	
	34	191	43.27	5 040	1.8	27	**2KJ3603 - ■ DF23 - ■ ■ T1**	
	37	174	39.33	4 970	2.3	27	**2KJ3603 - ■ DF23 - ■ ■ S1**	
	43	149	33.73	4 860	2.5	27	**2KJ3603 - ■ DF23 - ■ ■ R1**	
	47	136	30.67	4 780	2.8	27	**2KJ3603 - ■ DF23 - ■ ■ Q1**	
	C.39-LE80ZMQ4P							
	24	215	60.67	6 100	0.84	21	**2KJ3602 - ■ DF23 - ■ ■ W1**	
	28	189	52.65	6 190	0.90	21	**2KJ3602 - ■ DF23 - ■ ■ V1**	
	29	215	49.87	6 100	0.91	21	**2KJ3602 - ■ DF23 - ■ ■ U1**	
	34	190	43.27	6 190	1.0	21	**2KJ3602 - ■ DF23 - ■ ■ T1**	
	37	172	39.33	6 260	1.2	21	**2KJ3602 - ■ DF23 - ■ ■ S1**	
	43	148	33.73	6 270	1.4	21	**2KJ3602 - ■ DF23 - ■ ■ R1**	
	44	147	32.64	6 040	1.5	21	**2KJ3602 - ■ DF23 - ■ ■ Q1**	
	51	128	28.32	5 900	1.8	21	**2KJ3602 - ■ DF23 - ■ ■ P1**	
	56	116	25.75	5 800	2.0	21	**2KJ3602 - ■ DF23 - ■ ■ N1**	
	66	100	22.08	5 630	2.4	21	**2KJ3602 - ■ DF23 - ■ ■ M1**	
	72	91	20.07	5 520	2.6	21	**2KJ3602 - ■ DF23 - ■ ■ L1**	
	82	80	17.60	5 360	2.8	21	**2KJ3602 - ■ DF23 - ■ ■ K1**	
	92	71	15.71	5 230	3.0	21	**2KJ3602 - ■ DF23 - ■ ■ J1**	
	104	63	14.00	5 090	3.2	21	**2KJ3602 - ■ DF23 - ■ ■ H1**	
	112	58	12.92	4 990	3.4	21	**2KJ3602 - ■ DF23 - ■ ■ G1**	
	128	51	11.31	4 830	3.7	21	**2KJ3602 - ■ DF23 - ■ ■ F1**	
	146	45	9.92	4 660	4.0	21	**2KJ3602 - ■ DF23 - ■ ■ E1**	
	C.29-LE80ZMQ4P							
	66	99	22.08	4 180	0.92	15	**2KJ3601 - ■ DF23 - ■ ■ M1**	
	72	91	20.07	4 220	1.0	15	**2KJ3601 - ■ DF23 - ■ ■ L1**	
	82	80	17.60	4 150	1.2	15	**2KJ3601 - ■ DF23 - ■ ■ K1**	
	92	71	15.71	4 080	1.3	15	**2KJ3601 - ■ DF23 - ■ ■ J1**	
	104	63	14.00	4 010	1.5	15	**2KJ3601 - ■ DF23 - ■ ■ H1**	
	112	58	12.92	3 950	1.6	15	**2KJ3601 - ■ DF23 - ■ ■ G1**	
	128	51	11.31	3 840	1.8	15	**2KJ3601 - ■ DF23 - ■ ■ F1**	
	146	45	9.92	3 730	2.1	15	**2KJ3601 - ■ DF23 - ■ ■ E1**	
	161	41	9.00	3 650	2.2	15	**2KJ3601 - ■ DF23 - ■ ■ D1**	
	171	38	8.47	3 610	2.3	15	**2KJ3601 - ■ DF23 - ■ ■ C1**	
	194	34	7.47	3 500	2.5	15	**2KJ3601 - ■ DF23 - ■ ■ B1**	
	224	29	6.48	3 380	2.8	15	**2KJ3601 - ■ DF23 - ■ ■ A1**	
1.1	**C.89-LE90SM4P**							
	4.3	1 750	329.73	15 700	0.82	58	**2KJ3605 - ■ EK23 - ■ ■ M2**	
	4.8	1 580	295.75	16 000	0.92	58	**2KJ3605 - ■ EK23 - ■ ■ L2**	
	5.4	1 430	265.91	16 300	1.0	58	**2KJ3605 - ■ EK23 - ■ ■ K2**	

Article No. supplement		
Shaft design	**1, 5, 6, 7 or 9**	➞ page 10/44
Frequency and voltage	**2 or 9**	➞ page 11/2
Gearbox mounting type	**A, D, F or H**	➞ page 10/37

© Siemens AG 2017

Selection and ordering data (continued)

P_{rated}	n_2	T_2	i	F_{R2}	f_B	m	Article No.	Order code
kW	rpm	Nm	-	N	-	kg	(Article No. supplement ➞ below)	No. of poles
1.1	**C.89-LE90SM4P**							
	5.9	1 300	240.50	16 300	1.1	58	**2KJ3605 - ■ EK23 - ■ ■ J2**	
	6.4	1 200	222.00	16 300	1.2	58	**2KJ3605 - ■ EK23 - ■ ■ H2**	
	7.0	1 100	203.36	16 300	1.3	58	**2KJ3605 - ■ EK23 - ■ ■ G2**	
	8.4	925	170.62	16 300	1.5	58	**2KJ3605 - ■ EK23 - ■ ■ F2**	
	8.9	870	160.59	16 300	1.5	58	**2KJ3605 - ■ EK23 - ■ ■ E2**	
	9.7	800	147.33	16 300	1.6	58	**2KJ3605 - ■ EK23 - ■ ■ D2**	
	11	695	128.70	16 300	1.7	58	**2KJ3605 - ■ EK23 - ■ ■ C2**	
	12	625	115.23	16 300	1.8	58	**2KJ3605 - ■ EK23 - ■ ■ B2**	
	14	545	100.75	16 300	1.9	58	**2KJ3605 - ■ EK23 - ■ ■ A2**	
	16	465	86.48	16 300	2.1	58	**2KJ3605 - ■ EK23 - ■ ■ X1**	
	19	410	76.44	16 300	2.3	58	**2KJ3605 - ■ EK23 - ■ ■ W1**	
	C.69-LE90SM4P							
	11	705	129.00	9 720	0.81	36	**2KJ3604 - ■ EK23 - ■ ■ C2**	
	12	620	114.21	9 630	0.86	36	**2KJ3604 - ■ EK23 - ■ ■ B2**	
	14	650	102.50	8 560	1.0	36	**2KJ3604 - ■ EK23 - ■ ■ A2**	
	16	570	90.00	8 510	1.2	36	**2KJ3604 - ■ EK23 - ■ ■ X1**	
	17	520	81.82	8 440	1.3	36	**2KJ3604 - ■ EK23 - ■ ■ W1**	
	20	445	70.00	8 310	1.5	36	**2KJ3604 - ■ EK23 - ■ ■ V1**	
	22	405	63.64	8 210	1.6	36	**2KJ3604 - ■ EK23 - ■ ■ U1**	
	25	360	56.25	8 050	1.7	36	**2KJ3604 - ■ EK23 - ■ ■ T1**	
	28	325	51.14	7 940	1.8	36	**2KJ3604 - ■ EK23 - ■ ■ S1**	
	32	285	44.79	7 750	1.9	36	**2KJ3604 - ■ EK23 - ■ ■ R1**	
	34	265	41.35	7 630	2.0	36	**2KJ3604 - ■ EK23 - ■ ■ Q1**	
	39	235	36.61	7 440	2.1	36	**2KJ3604 - ■ EK23 - ■ ■ P1**	
	48	200	30.00	6 950	2.7	36	**2KJ3604 - ■ EK23 - ■ ■ N1**	
	90	107	15.88	5 900	3.4	36	**2KJ3604 - ■ EK23 - ■ ■ H1**	
	C.49-LE90SM4P							
	21	370	68.82	5 300	0.81	27	**2KJ3603 - ■ EK23 - ■ ■ X1**	
	23	330	60.67	5 250	0.86	27	**2KJ3603 - ■ EK23 - ■ ■ W1**	
	27	285	52.65	5 210	0.94	27	**2KJ3603 - ■ EK23 - ■ ■ V1**	
	29	325	49.87	4 270	0.98	27	**2KJ3603 - ■ EK23 - ■ ■ U1**	
	33	285	43.27	4 280	1.2	27	**2KJ3603 - ■ EK23 - ■ ■ T1**	
	36	255	39.33	4 320	1.5	27	**2KJ3603 - ■ EK23 - ■ ■ S1**	
	42	220	33.73	4 300	1.7	27	**2KJ3603 - ■ EK23 - ■ ■ R1**	
	46	200	30.67	4 270	1.9	27	**2KJ3603 - ■ EK23 - ■ ■ Q1**	
	53	178	26.89	4 200	2.1	27	**2KJ3603 - ■ EK23 - ■ ■ P1**	
	59	158	24.00	4 160	2.2	27	**2KJ3603 - ■ EK23 - ■ ■ N1**	
	67	141	21.39	4 100	2.3	27	**2KJ3603 - ■ EK23 - ■ ■ M1**	
	72	130	19.74	4 050	2.5	27	**2KJ3603 - ■ EK23 - ■ ■ L1**	
	82	114	17.29	3 960	2.7	27	**2KJ3603 - ■ EK23 - ■ ■ K1**	
	94	100	15.16	3 870	2.9	27	**2KJ3603 - ■ EK23 - ■ ■ J1**	
	104	91	13.75	3 790	3.0	27	**2KJ3603 - ■ EK23 - ■ ■ H1**	
	110	85	12.94	3 750	3.2	27	**2KJ3603 - ■ EK23 - ■ ■ G1**	
	125	75	11.41	3 650	3.5	27	**2KJ3603 - ■ EK23 - ■ ■ F1**	
	144	65	9.90	3 540	3.8	27	**2KJ3603 - ■ EK23 - ■ ■ E1**	
	C.39-LE90SM4P							
	42	220	33.73	5 590	0.91	23	**2KJ3602 - ■ EK23 - ■ ■ R1**	
	44	215	32.64	5 320	0.98	23	**2KJ3602 - ■ EK23 - ■ ■ Q1**	

Article No. supplement		
Shaft design	**1, 5, 6, 7 or 9**	➞ page 10/44
Frequency and voltage	**2 or 9**	➞ page 11/2
Gearbox mounting type	**A, D, F or H**	➞ page 10/37

© Siemens AG 2017

Selection and ordering data (continued)

P_{rated} kW	n_2 rpm	T_2 Nm	i -	F_{R2} N	f_B -	m kg	Article No. (Article No. supplement ➞ below)	Order code No. of poles
1.1	**C.39-LE90SM4P**							
	50	191	28.32	5 230	1.2	23	**2KJ3602 - ■ EK23 - ■ ■ P1**	
	55	173	25.75	5 200	1.4	23	**2KJ3602 - ■ EK23 - ■ ■ N1**	
	65	149	22.08	5 120	1.6	23	**2KJ3602 - ■ EK23 - ■ ■ M1**	
	71	135	20.07	5 060	1.7	23	**2KJ3602 - ■ EK23 - ■ ■ L1**	
	81	119	17.60	4 960	1.9	23	**2KJ3602 - ■ EK23 - ■ ■ K1**	
	91	106	15.71	4 870	2.0	23	**2KJ3602 - ■ EK23 - ■ ■ J1**	
	102	94	14.00	4 770	2.2	23	**2KJ3602 - ■ EK23 - ■ ■ H1**	
	110	87	12.92	4 700	2.3	23	**2KJ3602 - ■ EK23 - ■ ■ G1**	
	126	76	11.31	4 580	2.5	23	**2KJ3602 - ■ EK23 - ■ ■ F1**	
	144	67	9.92	4 440	2.7	23	**2KJ3602 - ■ EK23 - ■ ■ E1**	
	158	61	9.00	4 350	2.9	23	**2KJ3602 - ■ EK23 - ■ ■ D1**	
	168	57	8.47	4 290	3.0	23	**2KJ3602 - ■ EK23 - ■ ■ C1**	
	191	50	7.47	4 170	3.3	23	**2KJ3602 - ■ EK23 - ■ ■ B1**	
	220	44	6.48	4 010	3.5	23	**2KJ3602 - ■ EK23 - ■ ■ A1**	
	C.29-LE90SM4P							
	91	106	15.71	3 610	0.87	17	**2KJ3601 - ■ EK23 - ■ ■ J1**	
	102	95	14.00	3 570	0.98	17	**2KJ3601 - ■ EK23 - ■ ■ H1**	
	110	87	12.92	3 560	1.1	17	**2KJ3601 - ■ EK23 - ■ ■ G1**	
	126	76	11.31	3 510	1.2	17	**2KJ3601 - ■ EK23 - ■ ■ F1**	
	144	67	9.92	3 440	1.4	17	**2KJ3601 - ■ EK23 - ■ ■ E1**	
	158	61	9.00	3 390	1.5	17	**2KJ3601 - ■ EK23 - ■ ■ D1**	
	168	57	8.47	3 360	1.6	17	**2KJ3601 - ■ EK23 - ■ ■ C1**	
	191	50	7.47	3 290	1.7	17	**2KJ3601 - ■ EK23 - ■ ■ B1**	
	220	44	6.48	3 190	1.9	17	**2KJ3601 - ■ EK23 - ■ ■ A1**	
1.5	**C.89-LE90ZLR4P**							
	6.0	1 740	240.50	15 800	0.83	61	**2KJ3605 - ■ EM23 - ■ ■ J2**	
	6.5	1 610	222.00	16 000	0.90	61	**2KJ3605 - ■ EM23 - ■ ■ H2**	
	7.1	1 480	203.36	16 200	0.98	61	**2KJ3605 - ■ EM23 - ■ ■ G2**	
	8.5	1 240	170.62	16 300	1.1	61	**2KJ3605 - ■ EM23 - ■ ■ F2**	
	9.0	1 170	160.59	16 300	1.1	61	**2KJ3605 - ■ EM23 - ■ ■ E2**	
	9.8	1 070	147.33	16 300	1.2	61	**2KJ3605 - ■ EM23 - ■ ■ D2**	
	11	935	128.70	16 300	1.3	61	**2KJ3605 - ■ EM23 - ■ ■ C2**	
	13	840	115.23	16 300	1.3	61	**2KJ3605 - ■ EM23 - ■ ■ B2**	
	14	735	100.75	16 300	1.4	61	**2KJ3605 - ■ EM23 - ■ ■ A2**	
	17	630	86.48	16 200	1.6	61	**2KJ3605 - ■ EM23 - ■ ■ X1**	
	19	555	76.44	15 800	1.7	61	**2KJ3605 - ■ EM23 - ■ ■ W1**	
	C.69-LE90ZLR4P							
	16	770	90.00	7 250	0.87	39	**2KJ3604 - ■ EM23 - ■ ■ X1**	
	18	700	81.82	7 300	0.96	39	**2KJ3604 - ■ EM23 - ■ ■ W1**	
	21	600	70.00	7 320	1.1	39	**2KJ3604 - ■ EM23 - ■ ■ V1**	
	23	550	63.64	7 280	1.2	39	**2KJ3604 - ■ EM23 - ■ ■ U1**	
	26	485	56.25	7 250	1.3	39	**2KJ3604 - ■ EM23 - ■ ■ T1**	
	28	440	51.14	7 200	1.3	39	**2KJ3604 - ■ EM23 - ■ ■ S1**	
	32	385	44.79	7 110	1.4	39	**2KJ3604 - ■ EM23 - ■ ■ R1**	
	35	355	41.35	7 040	1.5	39	**2KJ3604 - ■ EM23 - ■ ■ Q1**	
	39	315	36.61	6 920	1.6	39	**2KJ3604 - ■ EM23 - ■ ■ P1**	
	48	265	30.00	6 470	2.0	39	**2KJ3604 - ■ EM23 - ■ ■ N1**	
	55	235	26.28	6 320	2.2	39	**2KJ3604 - ■ EM23 - ■ ■ M1**	

Article No. supplement		
Shaft design	**1, 5, 6, 7 or 9**	➞ page 10/44
Frequency and voltage	**2 or 9**	➞ page 11/2
Gearbox mounting type	**A, D, F or H**	➞ page 10/37

© Siemens AG 2017

Selection and ordering data (continued)

P_{rated}	n_2	T_2	i	F_{R2}	f_B	m	Article No.	Order code
kW	rpm	Nm	-	N	-	kg	(Article No. supplement ➞ below)	No. of poles
1.5	**C.69-LE90ZLR4P**							
	60	215	24.26	6 240	2.3	39	**2KJ3604 - ■ EM23 - ■ ■ L1**	
	67	193	21.48	6 080	2.5	39	**2KJ3604 - ■ EM23 - ■ ■ K1**	
	81	160	17.88	5 870	2.7	39	**2KJ3604 - ■ EM23 - ■ ■ J1**	
	91	144	15.88	5 600	2.5	39	**2KJ3604 - ■ EM23 - ■ ■ H1**	
	103	128	14.06	5 450	2.8	39	**2KJ3604 - ■ EM23 - ■ ■ G1**	
	124	106	11.70	5 230	3.4	39	**2KJ3604 - ■ EM23 - ■ ■ F1**	
	131	100	11.01	5 160	3.6	39	**2KJ3604 - ■ EM23 - ■ ■ E1**	
	146	90	9.87	5 020	4.0	39	**2KJ3604 - ■ EM23 - ■ ■ D1**	
	C.49-LE90ZLR4P							
	33	380	43.27	3 450	0.91	30	**2KJ3603 - ■ EM23 - ■ ■ T1**	
	37	345	39.33	3 530	1.1	30	**2KJ3603 - ■ EM23 - ■ ■ S1**	
	43	295	33.73	3 640	1.3	30	**2KJ3603 - ■ EM23 - ■ ■ R1**	
	47	270	30.67	3 650	1.4	30	**2KJ3603 - ■ EM23 - ■ ■ Q1**	
	54	235	26.89	3 700	1.5	30	**2KJ3603 - ■ EM23 - ■ ■ P1**	
	60	210	24.00	3 690	1.6	30	**2KJ3603 - ■ EM23 - ■ ■ N1**	
	68	190	21.39	3 660	1.7	30	**2KJ3603 - ■ EM23 - ■ ■ M1**	
	73	175	19.74	3 650	1.8	30	**2KJ3603 - ■ EM23 - ■ ■ L1**	
	84	153	17.29	3 610	2.0	30	**2KJ3603 - ■ EM23 - ■ ■ K1**	
	95	135	15.16	3 550	2.1	30	**2KJ3603 - ■ EM23 - ■ ■ J1**	
	105	122	13.75	3 510	2.3	30	**2KJ3603 - ■ EM23 - ■ ■ H1**	
	112	115	12.94	3 480	2.4	30	**2KJ3603 - ■ EM23 - ■ ■ G1**	
	127	101	11.41	3 410	2.5	30	**2KJ3603 - ■ EM23 - ■ ■ F1**	
	146	88	9.90	3 330	2.8	30	**2KJ3603 - ■ EM23 - ■ ■ E1**	
	161	82	9.00	3 180	3.1	30	**2KJ3603 - ■ EM23 - ■ ■ D1**	
	171	77	8.47	3 150	3.3	30	**2KJ3603 - ■ EM23 - ■ ■ C1**	
	193	68	7.47	3 070	3.6	30	**2KJ3603 - ■ EM23 - ■ ■ B1**	
	223	59	6.48	2 980	3.9	30	**2KJ3603 - ■ EM23 - ■ ■ A1**	
	C.39-LE90ZLR4P							
	51	255	28.32	4 480	0.92	26	**2KJ3602 - ■ EM23 - ■ ■ P1**	
	56	230	25.75	4 530	1.0	26	**2KJ3602 - ■ EM23 - ■ ■ N1**	
	65	200	22.08	4 510	1.2	26	**2KJ3602 - ■ EM23 - ■ ■ M1**	
	72	182	20.07	4 500	1.3	26	**2KJ3602 - ■ EM23 - ■ ■ L1**	
	82	160	17.60	4 470	1.4	26	**2KJ3602 - ■ EM23 - ■ ■ K1**	
	92	142	15.71	4 440	1.5	26	**2KJ3602 - ■ EM23 - ■ ■ J1**	
	103	127	14.00	4 380	1.6	26	**2KJ3602 - ■ EM23 - ■ ■ H1**	
	112	117	12.92	4 340	1.7	26	**2KJ3602 - ■ EM23 - ■ ■ G1**	
	128	103	11.31	4 250	1.9	26	**2KJ3602 - ■ EM23 - ■ ■ F1**	
	146	90	9.92	4 160	2.0	26	**2KJ3602 - ■ EM23 - ■ ■ E1**	
	161	82	9.00	4 090	2.1	26	**2KJ3602 - ■ EM23 - ■ ■ D1**	
	171	77	8.47	4 040	2.2	26	**2KJ3602 - ■ EM23 - ■ ■ C1**	
	193	68	7.47	3 940	2.4	26	**2KJ3602 - ■ EM23 - ■ ■ B1**	
	223	59	6.48	3 820	2.6	26	**2KJ3602 - ■ EM23 - ■ ■ A1**	
	C.29-LE90ZLR4P							
	128	103	11.31	3 100	0.91	20	**2KJ3601 - ■ EM23 - ■ ■ F1**	
	146	90	9.92	3 090	1.0	20	**2KJ3601 - ■ EM23 - ■ ■ E1**	
	161	82	9.00	3 060	1.1	20	**2KJ3601 - ■ EM23 - ■ ■ D1**	
	171	77	8.47	3 050	1.2	20	**2KJ3601 - ■ EM23 - ■ ■ C1**	
	193	68	7.47	3 010	1.3	20	**2KJ3601 - ■ EM23 - ■ ■ B1**	
	223	59	6.48	2 950	1.4	20	**2KJ3601 - ■ EM23 - ■ ■ A1**	

Article No. supplement		
Shaft design	**1, 5, 6, 7 or 9**	➞ page 10/44
Frequency and voltage	**2 or 9**	➞ page 11/2
Gearbox mounting type	**A, D, F or H**	➞ page 10/37

© Siemens AG 2017

Selection and ordering data (continued)

P_{rated}	n_2	T_2	i	F_{R2}	f_B	m	Article No.	Order code
kW	rpm	Nm	-	N	-	kg	(Article No. supplement ➞ below)	No. of poles
2.2	**C.89-LE100ZLSA4P**							
	9.9	1 550	147.33	15 800	0.82	77	**2KJ3605 - ■ FN23 - ■ ■ D2**	
	11	1 350	128.70	15 700	0.87	77	**2KJ3605 - ■ FN23 - ■ ■ C2**	
	13	1 210	115.23	15 500	0.92	77	**2KJ3605 - ■ FN23 - ■ ■ B2**	
	15	1 060	100.75	15 200	0.99	77	**2KJ3605 - ■ FN23 - ■ ■ A2**	
	17	910	86.48	14 900	1.1	77	**2KJ3605 - ■ FN23 - ■ ■ X1**	
	19	805	76.44	14 600	1.1	77	**2KJ3605 - ■ FN23 - ■ ■ W1**	
	23	680	65.00	14 200	1.3	77	**2KJ3605 - ■ FN23 - ■ ■ V1**	
	26	720	55.61	12 500	2.0	77	**2KJ3605 - ■ FN23 - ■ ■ U1**	
	29	645	50.00	12 300	2.2	77	**2KJ3605 - ■ FN23 - ■ ■ T1**	
	32	585	45.22	12 100	2.4	77	**2KJ3605 - ■ FN23 - ■ ■ S1**	
	35	540	41.74	11 900	2.5	77	**2KJ3605 - ■ FN23 - ■ ■ R1**	
	38	495	38.24	11 700	2.6	77	**2KJ3605 - ■ FN23 - ■ ■ Q1**	
	C.69-LE100ZLSA4P							
	26	700	56.25	5 900	0.87	57	**2KJ3604 - ■ FN23 - ■ ■ T1**	
	29	640	51.14	5 940	0.90	57	**2KJ3604 - ■ FN23 - ■ ■ S1**	
	33	560	44.79	6 000	0.97	57	**2KJ3604 - ■ FN23 - ■ ■ R1**	
	35	515	41.35	6 030	1.0	57	**2KJ3604 - ■ FN23 - ■ ■ Q1**	
	40	455	36.61	6 030	1.1	57	**2KJ3604 - ■ FN23 - ■ ■ P1**	
	49	385	30.00	5 630	1.4	57	**2KJ3604 - ■ FN23 - ■ ■ N1**	
	56	340	26.28	5 570	1.5	57	**2KJ3604 - ■ FN23 - ■ ■ M1**	
	60	315	24.26	5 540	1.6	57	**2KJ3604 - ■ FN23 - ■ ■ L1**	
	68	275	21.48	5 500	1.7	57	**2KJ3604 - ■ FN23 - ■ ■ K1**	
	82	230	17.88	5 370	1.9	57	**2KJ3604 - ■ FN23 - ■ ■ J1**	
	92	205	15.88	5 110	1.7	57	**2KJ3604 - ■ FN23 - ■ ■ H1**	
	104	185	14.06	4 990	1.9	57	**2KJ3604 - ■ FN23 - ■ ■ G1**	
	125	154	11.70	4 850	2.3	57	**2KJ3604 - ■ FN23 - ■ ■ F1**	
	133	145	11.01	4 790	2.5	57	**2KJ3604 - ■ FN23 - ■ ■ E1**	
	148	130	9.87	4 700	2.8	57	**2KJ3604 - ■ FN23 - ■ ■ D1**	
	174	110	8.40	4 550	3.3	57	**2KJ3604 - ■ FN23 - ■ ■ C1**	
	203	95	7.20	4 390	3.8	57	**2KJ3604 - ■ FN23 - ■ ■ B1**	
	236	82	6.20	4 240	4.3	57	**2KJ3604 - ■ FN23 - ■ ■ A1**	
	C.49-LE100ZLSA4P							
	54	345	26.89	2 740	1.0	48	**2KJ3603 - ■ FN23 - ■ ■ P1**	
	61	305	24.00	2 870	1.1	48	**2KJ3603 - ■ FN23 - ■ ■ N1**	
	68	275	21.39	2 920	1.2	48	**2KJ3603 - ■ FN23 - ■ ■ M1**	
	74	250	19.74	2 990	1.2	48	**2KJ3603 - ■ FN23 - ■ ■ L1**	
	85	220	17.29	3 020	1.4	48	**2KJ3603 - ■ FN23 - ■ ■ K1**	
	97	195	15.16	3 020	1.5	48	**2KJ3603 - ■ FN23 - ■ ■ J1**	
	107	177	13.75	3 030	1.6	48	**2KJ3603 - ■ FN23 - ■ ■ H1**	
	113	166	12.94	3 030	1.6	48	**2KJ3603 - ■ FN23 - ■ ■ G1**	
	128	146	11.41	3 010	1.7	48	**2KJ3603 - ■ FN23 - ■ ■ F1**	
	148	127	9.90	2 980	1.9	48	**2KJ3603 - ■ FN23 - ■ ■ E1**	
	163	118	9.00	2 830	2.2	48	**2KJ3603 - ■ FN23 - ■ ■ D1**	
	173	111	8.47	2 810	2.3	48	**2KJ3603 - ■ FN23 - ■ ■ C1**	
	196	98	7.47	2 770	2.4	48	**2KJ3603 - ■ FN23 - ■ ■ B1**	
	226	85	6.48	2 730	2.7	48	**2KJ3603 - ■ FN23 - ■ ■ A1**	
	C.39-LE100ZLSA4P							
	83	230	17.60	3 660	0.97	40	**2KJ3602 - ■ FN23 - ■ ■ K1**	

Article No. supplement		
Shaft design	**1, 5, 6, 7 or 9**	➞ page 10/44
Frequency and voltage	**2 or 9**	➞ page 11/2
Gearbox mounting type	**A, D, F or H**	➞ page 10/37

© Siemens AG 2017

Selection and ordering data (continued)

P_{rated}	n_2	T_2	i	F_{R2}	f_B	m	Article No.	Order code
kW	rpm	Nm	-	N	-	kg	(Article No. supplement ➞ below)	No. of poles
2.2	**C.39-LE100ZLSA4P**							
	93	205	15.71	3 700	1.0	40	**2KJ3602 - ■ FN23 - ■ ■ J1**	
	105	184	14.00	3 710	1.1	40	**2KJ3602 - ■ FN23 - ■ ■ H1**	
	113	170	12.92	3 720	1.2	40	**2KJ3602 - ■ FN23 - ■ ■ G1**	
	130	148	11.31	3 720	1.3	40	**2KJ3602 - ■ FN23 - ■ ■ F1**	
	148	130	9.92	3 690	1.4	40	**2KJ3602 - ■ FN23 - ■ ■ E1**	
	163	118	9.00	3 660	1.5	40	**2KJ3602 - ■ FN23 - ■ ■ D1**	
	173	111	8.47	3 640	1.5	40	**2KJ3602 - ■ FN23 - ■ ■ C1**	
	196	98	7.47	3 580	1.7	40	**2KJ3602 - ■ FN23 - ■ ■ B1**	
	226	85	6.48	3 510	1.8	40	**2KJ3602 - ■ FN23 - ■ ■ A1**	
3	**C.89-LE100ZLSB4P**							
	19	1 100	76.44	13 300	0.84	77	**2KJ3605 - ■ FP23 - ■ ■ W1**	
	22	935	65.00	13 100	0.92	77	**2KJ3605 - ■ FP23 - ■ ■ V1**	
	26	990	55.61	11 100	1.5	77	**2KJ3605 - ■ FP23 - ■ ■ U1**	
	29	890	50.00	11 000	1.6	77	**2KJ3605 - ■ FP23 - ■ ■ T1**	
	32	805	45.22	10 900	1.7	77	**2KJ3605 - ■ FP23 - ■ ■ S1**	
	35	745	41.74	10 900	1.8	77	**2KJ3605 - ■ FP23 - ■ ■ R1**	
	38	680	38.24	10 800	1.9	77	**2KJ3605 - ■ FP23 - ■ ■ Q1**	
	45	570	32.08	10 500	2.1	77	**2KJ3605 - ■ FP23 - ■ ■ P1**	
	48	535	30.20	10 500	2.2	77	**2KJ3605 - ■ FP23 - ■ ■ N1**	
	53	490	27.70	10 300	2.3	77	**2KJ3605 - ■ FP23 - ■ ■ M1**	
	58	455	25.03	9 850	2.4	77	**2KJ3605 - ■ FP23 - ■ ■ L1**	
	69	380	21.00	9 580	2.8	77	**2KJ3605 - ■ FP23 - ■ ■ K1**	
	74	360	19.76	9 460	3.1	77	**2KJ3605 - ■ FP23 - ■ ■ J1**	
	C.69-LE100ZLSB4P							
	48	530	30.00	4 670	1.0	57	**2KJ3604 - ■ FP23 - ■ ■ N1**	
	55	465	26.28	4 750	1.1	57	**2KJ3604 - ■ FP23 - ■ ■ M1**	
	60	430	24.26	4 780	1.1	57	**2KJ3604 - ■ FP23 - ■ ■ L1**	
	68	380	21.48	4 810	1.2	57	**2KJ3604 - ■ FP23 - ■ ■ K1**	
	81	315	17.88	4 810	1.4	57	**2KJ3604 - ■ FP23 - ■ ■ J1**	
	92	285	15.88	4 520	1.3	57	**2KJ3604 - ■ FP23 - ■ ■ H1**	
	103	250	14.06	4 520	1.4	57	**2KJ3604 - ■ FP23 - ■ ■ G1**	
	124	210	11.70	4 440	1.7	57	**2KJ3604 - ■ FP23 - ■ ■ F1**	
	132	199	11.01	4 400	1.8	57	**2KJ3604 - ■ FP23 - ■ ■ E1**	
	147	178	9.87	4 350	2.0	57	**2KJ3604 - ■ FP23 - ■ ■ D1**	
	173	152	8.40	4 250	2.4	57	**2KJ3604 - ■ FP23 - ■ ■ C1**	
	202	130	7.20	4 140	2.8	57	**2KJ3604 - ■ FP23 - ■ ■ B1**	
	235	112	6.20	4 030	3.2	57	**2KJ3604 - ■ FP23 - ■ ■ A1**	
	C.49-LE100ZLSB4P							
	61	420	24.00	1 930	0.82	48	**2KJ3603 - ■ FP23 - ■ ■ N1**	
	68	375	21.39	2 080	0.88	48	**2KJ3603 - ■ FP23 - ■ ■ M1**	
	74	345	19.74	2 200	0.91	48	**2KJ3603 - ■ FP23 - ■ ■ L1**	
	84	305	17.29	2 310	0.98	48	**2KJ3603 - ■ FP23 - ■ ■ K1**	
	96	265	15.16	2 440	1.1	48	**2KJ3603 - ■ FP23 - ■ ■ J1**	
	106	240	13.75	2 500	1.1	48	**2KJ3603 - ■ FP23 - ■ ■ H1**	
	112	225	12.94	2 540	1.2	48	**2KJ3603 - ■ FP23 - ■ ■ G1**	
	128	200	11.41	2 570	1.3	48	**2KJ3603 - ■ FP23 - ■ ■ F1**	
	147	174	9.90	2 590	1.4	48	**2KJ3603 - ■ FP23 - ■ ■ E1**	
	162	162	9.00	2 430	1.6	48	**2KJ3603 - ■ FP23 - ■ ■ D1**	

Article No. supplement		
Shaft design	**1, 5, 6, 7 or 9**	➞ page 10/44
Frequency and voltage	**2 or 9**	➞ page 11/2
Gearbox mounting type	**A, D, F or H**	➞ page 10/37

© Siemens AG 2017

Selection and ordering data (continued)

P_{rated} kW	n_2 rpm	T_2 Nm	i -	F_{R2} N	f_B -	m kg	Article No. (Article No. supplement ➞ below)	Order code No. of poles
3	**C.49-LE100ZLSB4P**							
	172	153	8.47	2 430	1.7	48	**2KJ3603 - ■ FP23 - ■ ■ C1**	
	195	135	7.47	2 440	1.8	48	**2KJ3603 - ■ FP23 - ■ ■ B1**	
	225	117	6.48	2 440	2.0	48	**2KJ3603 - ■ FP23 - ■ ■ A1**	
	C.39-LE100ZLSB4P							
	104	250	14.00	2 990	0.81	40	**2KJ3602 - ■ FP23 - ■ ■ H1**	
	113	230	12.92	3 060	0.85	40	**2KJ3602 - ■ FP23 - ■ ■ G1**	
	129	200	11.31	3 150	0.93	40	**2KJ3602 - ■ FP23 - ■ ■ F1**	
	147	179	9.92	3 150	1.0	40	**2KJ3602 - ■ FP23 - ■ ■ E1**	
	162	162	9.00	3 180	1.1	40	**2KJ3602 - ■ FP23 - ■ ■ D1**	
	172	153	8.47	3 180	1.1	40	**2KJ3602 - ■ FP23 - ■ ■ C1**	
	195	134	7.47	3 190	1.2	40	**2KJ3602 - ■ FP23 - ■ ■ B1**	
	225	117	6.48	3 170	1.3	40	**2KJ3602 - ■ FP23 - ■ ■ A1**	
4	**C.89-LE112ZMKB4P**							
	26	1310	55.61	9 370	1.1	77	**2KJ3605 - ■ GJ23 - ■ ■ U1**	
	29	1180	50.00	9 500	1.2	77	**2KJ3605 - ■ GJ23 - ■ ■ T1**	
	32	1070	45.22	9 560	1.3	77	**2KJ3605 - ■ GJ23 - ■ ■ S1**	
	35	990	41.74	9 590	1.4	77	**2KJ3605 - ■ GJ23 - ■ ■ R1**	
	38	905	38.24	9 610	1.4	77	**2KJ3605 - ■ GJ23 - ■ ■ Q1**	
	46	760	32.08	9 560	1.6	77	**2KJ3605 - ■ GJ23 - ■ ■ P1**	
	48	715	30.20	9 530	1.7	77	**2KJ3605 - ■ GJ23 - ■ ■ N1**	
	53	655	27.70	9 470	1.7	77	**2KJ3605 - ■ GJ23 - ■ ■ M1**	
	58	605	25.03	8 940	1.8	77	**2KJ3605 - ■ GJ23 - ■ ■ L1**	
	70	510	21.00	8 790	2.1	77	**2KJ3605 - ■ GJ23 - ■ ■ K1**	
	74	480	19.76	8 730	2.3	77	**2KJ3605 - ■ GJ23 - ■ ■ J1**	
	81	440	18.13	8 640	2.5	77	**2KJ3605 - ■ GJ23 - ■ ■ H1**	
	92	385	15.84	8 470	2.9	77	**2KJ3605 - ■ GJ23 - ■ ■ G1**	
	103	340	14.18	8 350	3.1	77	**2KJ3605 - ■ GJ23 - ■ ■ F1**	
	118	300	12.40	8 130	3.4	77	**2KJ3605 - ■ GJ23 - ■ ■ E1**	
	137	255	10.64	7 910	3.7	77	**2KJ3605 - ■ GJ23 - ■ ■ D1**	
	155	225	9.41	7 710	4.0	77	**2KJ3605 - ■ GJ23 - ■ ■ C1**	
	182	194	8.00	7 420	4.3	77	**2KJ3605 - ■ GJ23 - ■ ■ B1**	
	213	167	6.86	7 150	4.3	77	**2KJ3605 - ■ GJ23 - ■ ■ A1**	
	C.69-LE112ZMKB4P							
	56	620	26.28	3 700	0.83	58	**2KJ3604 - ■ GJ23 - ■ ■ M1**	
	60	570	24.26	3 830	0.86	58	**2KJ3604 - ■ GJ23 - ■ ■ L1**	
	68	505	21.48	3 960	0.93	58	**2KJ3604 - ■ GJ23 - ■ ■ K1**	
	82	420	17.88	4 100	1.0	58	**2KJ3604 - ■ GJ23 - ■ ■ J1**	
	92	380	15.88	3 800	0.94	58	**2KJ3604 - ■ GJ23 - ■ ■ H1**	
	104	335	14.06	3 880	1.1	58	**2KJ3604 - ■ GJ23 - ■ ■ G1**	
	125	280	11.70	3 910	1.3	58	**2KJ3604 - ■ GJ23 - ■ ■ F1**	
	133	260	11.01	3 940	1.4	58	**2KJ3604 - ■ GJ23 - ■ ■ E1**	
	148	235	9.87	3 910	1.5	58	**2KJ3604 - ■ GJ23 - ■ ■ D1**	
	174	200	8.40	3 880	1.8	58	**2KJ3604 - ■ GJ23 - ■ ■ C1**	
	203	173	7.20	3 810	2.1	58	**2KJ3604 - ■ GJ23 - ■ ■ B1**	
	235	149	6.20	3 740	2.3	58	**2KJ3604 - ■ GJ23 - ■ ■ A1**	
	C.49-LE112ZMKB4P							
	96	355	15.16	1 600	0.80	49	**2KJ3603 - ■ GJ23 - ■ ■ J1**	
	106	320	13.75	1 820	0.85	49	**2KJ3603 - ■ GJ23 - ■ ■ H1**	
	113	300	12.94	1 900	0.89	49	**2KJ3603 - ■ GJ23 - ■ ■ G1**	

Article No. supplement		
Shaft design	**1, 5, 6, 7 or 9**	➞ page 10/44
Frequency and voltage	**2 or 9**	➞ page 11/2
Gearbox mounting type	**A, D, F or H**	➞ page 10/37

© Siemens AG 2017

Selection and ordering data (continued)

P_{rated}	n_2	T_2	i	F_{R2}	f_B	m	Article No.	Order code
kW	rpm	Nm	-	N	-	kg	(Article No. supplement ➞ below)	No. of poles
4	**C.49-LE112ZMKB4P**							
	128	265	11.41	2 010	0.95	49	**2KJ3603 - ■ GJ23 - ■ ■ F1**	
	147	230	9.90	2 110	1.0	49	**2KJ3603 - ■ GJ23 - ■ ■ E1**	
	162	215	9.00	1 580	1.2	49	**2KJ3603 - ■ GJ23 - ■ ■ D1**	
	172	200	8.47	1 760	1.3	49	**2KJ3603 - ■ GJ23 - ■ ■ C1**	
	195	179	7.47	1 940	1.3	49	**2KJ3603 - ■ GJ23 - ■ ■ B1**	
	225	155	6.48	2 080	1.5	49	**2KJ3603 - ■ GJ23 - ■ ■ A1**	
	C.39-LE112ZMKB4P							
	162	215	9.00	2 580	0.81	44	**2KJ3602 - ■ GJ23 - ■ ■ D1**	
	172	200	8.47	2 650	0.83	44	**2KJ3602 - ■ GJ23 - ■ ■ C1**	
	195	179	7.47	2 680	0.91	44	**2KJ3602 - ■ GJ23 - ■ ■ B1**	
	225	155	6.48	2 740	0.99	44	**2KJ3602 - ■ GJ23 - ■ ■ A1**	
5.5	**C.89-LE132ZST4P**							
	38	1 240	38.24	7 810	1.0	108	**2KJ3605 - ■ HJ23 - ■ ■ Q1**	
	46	1 040	32.08	8 050	1.2	108	**2KJ3605 - ■ HJ23 - ■ ■ P1**	
	49	980	30.20	8 100	1.2	108	**2KJ3605 - ■ HJ23 - ■ ■ N1**	
	53	895	27.70	8 180	1.3	108	**2KJ3605 - ■ HJ23 - ■ ■ M1**	
	59	830	25.03	7 590	1.3	108	**2KJ3605 - ■ HJ23 - ■ ■ L1**	
	70	695	21.00	7 680	1.5	108	**2KJ3605 - ■ HJ23 - ■ ■ K1**	
	74	655	19.76	7 680	1.7	108	**2KJ3605 - ■ HJ23 - ■ ■ J1**	
	81	600	18.13	7 680	1.8	108	**2KJ3605 - ■ HJ23 - ■ ■ H1**	
	92	525	15.84	7 630	2.1	108	**2KJ3605 - ■ HJ23 - ■ ■ G1**	
	103	470	14.18	7 570	2.2	108	**2KJ3605 - ■ HJ23 - ■ ■ F1**	
	118	410	12.40	7 470	2.4	108	**2KJ3605 - ■ HJ23 - ■ ■ E1**	
	138	350	10.64	7 330	2.7	108	**2KJ3605 - ■ HJ23 - ■ ■ D1**	
	156	310	9.41	7 190	2.9	108	**2KJ3605 - ■ HJ23 - ■ ■ C1**	
	183	265	8.00	6 980	3.1	108	**2KJ3605 - ■ HJ23 - ■ ■ B1**	
	214	225	6.86	6 790	3.1	108	**2KJ3605 - ■ HJ23 - ■ ■ A1**	
	C.69-LE132ZST4P							
	125	385	11.70	2 950	0.94	88	**2KJ3604 - ■ HJ23 - ■ ■ F1**	
	133	360	11.01	3 170	0.99	88	**2KJ3604 - ■ HJ23 - ■ ■ E1**	
	148	325	9.87	3 230	1.1	88	**2KJ3604 - ■ HJ23 - ■ ■ D1**	
	174	275	8.40	3 310	1.3	88	**2KJ3604 - ■ HJ23 - ■ ■ C1**	
	203	235	7.20	3 340	1.5	88	**2KJ3604 - ■ HJ23 - ■ ■ B1**	
	236	200	6.20	3 360	1.7	88	**2KJ3604 - ■ HJ23 - ■ ■ A1**	
7.5	**C.89-LE132ZMS4P**							
	46	1 410	32.08	6 070	0.86	108	**2KJ3605 - ■ HL23 - ■ ■ P1**	
	49	1 330	30.20	6 220	0.89	108	**2KJ3605 - ■ HL23 - ■ ■ N1**	
	53	1 220	27.70	6 430	0.92	108	**2KJ3605 - ■ HL23 - ■ ■ M1**	
	59	1 130	25.03	4 900	0.96	108	**2KJ3605 - ■ HL23 - ■ ■ L1**	
	70	950	21.00	6 040	1.1	108	**2KJ3605 - ■ HL23 - ■ ■ K1**	
	74	890	19.76	6 270	1.3	108	**2KJ3605 - ■ HL23 - ■ ■ J1**	
	81	820	18.13	6 360	1.4	108	**2KJ3605 - ■ HL23 - ■ ■ H1**	
	93	715	15.84	6 490	1.5	108	**2KJ3605 - ■ HL23 - ■ ■ G1**	
	104	640	14.18	6 540	1.7	108	**2KJ3605 - ■ HL23 - ■ ■ F1**	
	119	560	12.40	6 570	1.8	108	**2KJ3605 - ■ HL23 - ■ ■ E1**	
	138	480	10.64	6 550	2.0	108	**2KJ3605 - ■ HL23 - ■ ■ D1**	
	156	425	9.41	6 500	2.2	108	**2KJ3605 - ■ HL23 - ■ ■ C1**	
	184	360	8.00	6 410	2.3	108	**2KJ3605 - ■ HL23 - ■ ■ B1**	
	214	310	6.86	6 280	2.3	108	**2KJ3605 - ■ HL23 - ■ ■ A1**	

Article No. supplement		
Shaft design	**1, 5, 6, 7 or 9**	➞ page 10/44
Frequency and voltage	**2 or 9**	➞ page 11/2
Gearbox mounting type	**A, D, F or H**	➞ page 10/37

© Siemens AG 2017

Selection and ordering data (continued)

P_{rated}	n_2	T_2	i	F_{R2}	f_B	m	Article No.	Order code
kW	rpm	Nm	-	N	-	kg	(Article No. supplement ➞ below)	No. of poles
7.5	**C.69-LE132ZMS4P**							
	149	440	9.87	1 400	0.82	88	**2KJ3604 - ■ HL23 - ■ ■ D1**	
	175	375	8.40	1 990	0.96	88	**2KJ3604 - ■ HL23 - ■ ■ C1**	
	204	320	7.20	2 470	1.1	88	**2KJ3604 - ■ HL23 - ■ ■ B1**	
	237	275	6.20	2 790	1.3	88	**2KJ3604 - ■ HL23 - ■ ■ A1**	

Article No. supplement		
Shaft design	**1, 5, 6, 7 or 9**	➞ page 10/44
Frequency and voltage	**2 or 9**	➞ page 11/2
Gearbox mounting type	**A, D, F or H**	➞ page 10/37

© Siemens AG 2017

Selection and ordering data

i	n_2	T_{2N}	F_{R2}	J_G	R_{ex}	Motor frame size							Article No.
-	rpm	Nm	N	10^{-4} kgm²	-	63	71	80	90	100	112	132	
C.29													
265.20	5.5	108	4 140	0.05	1326/5	✓	✓	✓					**2KJ3601 - ■■■■■ - ■■ M2**
230.10	6.3	108	4 140	0.05	2301/10	✓	✓	✓					**2KJ3601 - ■■■■■ - ■■ L2**
209.18	6.9	109	4 130	0.07	2301/11	✓	✓	✓	✓				**2KJ3601 - ■■■■■ - ■■ K2**
179.40	8.1	110	4 130	0.08	897/5	✓	✓	✓	✓				**2KJ3601 - ■■■■■ - ■■ J2**
163.09	8.9	110	4 130	0.10	1794/11	✓	✓	✓	✓				**2KJ3601 - ■■■■■ - ■■ H2**
143.00	10	110	4 130	0.11	143/1	✓	✓	✓	✓				**2KJ3601 - ■■■■■ - ■■ G2**
127.64	11	110	4 130	0.14	1404/11	✓	✓	✓	✓				**2KJ3601 - ■■■■■ - ■■ F2**
113.75	13	110	4 130	0.16	455/4	✓	✓	✓	✓				**2KJ3601 - ■■■■■ - ■■ E2**
105.00	14	110	4 130	0.20	105/1	✓	✓	✓	✓				**2KJ3601 - ■■■■■ - ■■ D2**
91.93	16	110	4 130	0.22	1287/14	✓	✓	✓	✓				**2KJ3601 - ■■■■■ - ■■ C2**
80.60	18	110	4 130	0.22	403/5	✓	✓	✓	✓				**2KJ3601 - ■■■■■ - ■■ B2**
73.12	20	110	4 130	0.28	585/8	✓	✓	✓	✓				**2KJ3601 - ■■■■■ - ■■ A2**
68.82	21	110	4 130	0.33	1170/17	✓	✓	✓	✓				**2KJ3601 - ■■■■■ - ■■ X1**
60.67	24	110	4 130	0.36	182/3	✓	✓	✓	✓				**2KJ3601 - ■■■■■ - ■■ W1**
52.65	28	110	4 130	0.48	1053/20	✓	✓	✓	✓				**2KJ3601 - ■■■■■ - ■■ V1**
49.87	29	102	4 170	0.05	748/15	✓	✓	✓	✓				**2KJ3601 - ■■■■■ - ■■ U1**
43.27	34	103	4 160	0.06	649/15	✓	✓	✓	✓				**2KJ3601 - ■■■■■ - ■■ T1**
39.33	37	103	4 160	0.07	118/3	✓	✓	✓	✓				**2KJ3601 - ■■■■■ - ■■ S1**
33.73	43	104	4 160	0.09	506/15	✓	✓	✓	✓				**2KJ3601 - ■■■■■ - ■■ R1**
32.64	44	90	4 230	0.05	816/25	✓	✓	✓	✓				**2KJ3601 - ■■■■■ - ■■ Q1**
28.32	51	90	4 230	0.06	708/25	✓	✓	✓	✓				**2KJ3601 - ■■■■■ - ■■ P1**
25.75	56	91	4 220	0.07	1416/55	✓	✓	✓	✓				**2KJ3601 - ■■■■■ - ■■ N1**
22.08	66	91	4 220	0.09	552/25	✓	✓	✓	✓				**2KJ3601 - ■■■■■ - ■■ M1**
20.07	72	92	4 200	0.11	1104/55	✓	✓	✓	✓				**2KJ3601 - ■■■■■ - ■■ L1**
17.60	82	92	3 970	0.13	88/5	✓	✓	✓	✓				**2KJ3601 - ■■■■■ - ■■ K1**
15.71	92	92	3 770	0.15	864/55	✓	✓	✓	✓				**2KJ3601 - ■■■■■ - ■■ J1**
14.00	104	93	3 560	0.18	14/1	✓	✓	✓	✓				**2KJ3601 - ■■■■■ - ■■ H1**
12.92	112	93	3 430	0.22	168/13	✓	✓	✓	✓				**2KJ3601 - ■■■■■ - ■■ G1**
11.31	128	94	3 210	0.25	396/35	✓	✓	✓	✓				**2KJ3601 - ■■■■■ - ■■ F1**
9.92	146	94	3 020	0.26	248/25	✓	✓	✓	✓				**2KJ3601 - ■■■■■ - ■■ E1**
9.00	161	91	2 960	0.33	9/1	✓	✓	✓	✓				**2KJ3601 - ■■■■■ - ■■ D1**
8.47	171	90	2 950	0.38	144/17	✓	✓	✓	✓				**2KJ3601 - ■■■■■ - ■■ C1**
7.47	194	86	2 920	0.43	112/15	✓	✓	✓	✓				**2KJ3601 - ■■■■■ - ■■ B1**
6.48	224	82	2 880	0.57	162/25	✓	✓	✓	✓				**2KJ3601 - ■■■■■ - ■■ A1**

© Siemens AG 2017

Selection and ordering data (continued)

i	n_2	T_{2N}	F_{R2}	J_G	R_{ex}	Motor frame size							Article No.
-	rpm	Nm	N	10^{-4} kgm²	-	63	71	80	90	100	112	132	
C.39													
299.00	4.8	192	6 180	0.04	299/1	✓	✓						2KJ3602 - ■■■■■ - ■■ N2
265.20	5.5	192	6 180	0.05	1326/5	✓	✓	✓					2KJ3602 - ■■■■■ - ■■ M2
230.10	6.3	193	6 180	0.06	2301/10	✓	✓	✓					2KJ3602 - ■■■■■ - ■■ L2
209.18	6.9	193	6 180	0.07	2301/11	✓	✓	✓	✓				2KJ3602 - ■■■■■ - ■■ K2
179.40	8.1	193	6 180	0.09	897/5	✓	✓	✓	✓				2KJ3602 - ■■■■■ - ■■ J2
163.09	8.9	193	6 180	0.11	1794/11	✓	✓	✓	✓				2KJ3602 - ■■■■■ - ■■ H2
143.00	10	194	6 170	0.13	143/1	✓	✓	✓	✓	✓			2KJ3602 - ■■■■■ - ■■ G2
127.64	11	194	6 170	0.16	1404/11	✓	✓	✓	✓	✓			2KJ3602 - ■■■■■ - ■■ F2
113.75	13	194	6 170	0.19	455/4	✓	✓	✓	✓	✓			2KJ3602 - ■■■■■ - ■■ E2
105.00	14	194	6 170	0.23	105/1	✓	✓	✓	✓	✓			2KJ3602 - ■■■■■ - ■■ D2
91.93	16	194	6 170	0.27	1287/14	✓	✓	✓	✓	✓			2KJ3602 - ■■■■■ - ■■ C2
80.60	18	194	6 170	0.26	403/5	✓	✓	✓	✓	✓			2KJ3602 - ■■■■■ - ■■ B2
73.12	20	194	6 170	0.36	585/8	✓	✓	✓	✓	✓			2KJ3602 - ■■■■■ - ■■ A2
68.82	21	194	6 170	0.43	1170/17	✓	✓	✓	✓	✓			2KJ3602 - ■■■■■ - ■■ X1
60.67	24	183	6 210	0.47	182/3	✓	✓	✓	✓	✓			2KJ3602 - ■■■■■ - ■■ W1
52.65	28	170	6 260	0.64	1053/20	✓	✓	✓	✓	✓			2KJ3602 - ■■■■■ - ■■ V1
49.87	29	198	6 160	0.06	748/15	✓	✓	✓	✓				2KJ3602 - ■■■■■ - ■■ U1
43.27	34	199	6 150	0.07	649/15	✓	✓	✓	✓				2KJ3602 - ■■■■■ - ■■ T1
39.33	37	200	6 140	0.08	118/3	✓	✓	✓	✓				2KJ3602 - ■■■■■ - ■■ S1
33.73	43	200	5 730	0.11	506/15	✓	✓	✓	✓				2KJ3602 - ■■■■■ - ■■ R1
32.64	44	215	5 260	0.07	816/25	✓	✓	✓	✓				2KJ3602 - ■■■■■ - ■■ Q1
28.32	51	235	4 680	0.08	708/25	✓	✓	✓	✓				2KJ3602 - ■■■■■ - ■■ P1
25.75	56	235	4 450	0.10	1416/55	✓	✓	✓	✓				2KJ3602 - ■■■■■ - ■■ N1
22.08	66	235	4 100	0.13	552/25	✓	✓	✓	✓				2KJ3602 - ■■■■■ - ■■ M1
20.07	72	235	3 890	0.16	1104/55	✓	✓	✓	✓				2KJ3602 - ■■■■■ - ■■ L1
17.60	82	225	3 720	0.19	88/5	✓	✓	✓	✓	✓			2KJ3602 - ■■■■■ - ■■ K1
15.71	92	215	3 600	0.23	864/55	✓	✓	✓	✓	✓			2KJ3602 - ■■■■■ - ■■ J1
14.00	104	205	3 490	0.28	14/1	✓	✓	✓	✓	✓			2KJ3602 - ■■■■■ - ■■ H1
12.92	112	199	3 400	0.34	168/13	✓	✓	✓	✓	✓			2KJ3602 - ■■■■■ - ■■ G1
11.31	128	189	3 270	0.41	396/35	✓	✓	✓	✓	✓			2KJ3602 - ■■■■■ - ■■ F1
9.92	146	181	3 130	0.44	248/25	✓	✓	✓	✓	✓			2KJ3602 - ■■■■■ - ■■ E1
9.00	161	174	3 040	0.59	9/1	✓	✓	✓	✓	✓			2KJ3602 - ■■■■■ - ■■ D1
8.47	171	170	3 030	0.68	144/17	✓	✓	✓	✓	✓			2KJ3602 - ■■■■■ - ■■ C1
7.47	194	163	3 050	0.81	112/15	✓	✓	✓	✓	✓			2KJ3602 - ■■■■■ - ■■ B1
6.48	224	154	3 050	1.08	162/25	✓	✓	✓	✓	✓			2KJ3602 - ■■■■■ - ■■ A1

© Siemens AG 2017

Selection and ordering data (continued)

i	n_2	T_{2N}	F_{R2}	J_G	R_{ex}	Motor frame size							Article No.
-	rpm	Nm	N	10^{-4} kgm²	-	63	71	80	90	100	112	132	
C.49													
299.00	4.8	350	8 410	0.04	299/1	✓	✓						2KJ3603 - ■■■■■ - ■■ N2
265.20	5.5	350	8 410	0.05	1326/5	✓	✓	✓					2KJ3603 - ■■■■■ - ■■ M2
230.10	6.3	355	8 400	0.07	2301/10	✓	✓	✓					2KJ3603 - ■■■■■ - ■■ L2
209.18	6.9	355	8 400	0.08	2301/11	✓	✓	✓	✓				2KJ3603 - ■■■■■ - ■■ K2
179.40	8.1	355	8 260	0.10	897/5	✓	✓	✓	✓				2KJ3603 - ■■■■■ - ■■ J2
163.09	8.9	355	7 920	0.13	1794/11	✓	✓	✓	✓				2KJ3603 - ■■■■■ - ■■ H2
143.00	10	355	7 480	0.15	143/1	✓	✓	✓	✓	✓	✓		2KJ3603 - ■■■■■ - ■■ G2
127.64	11	355	7 110	0.18	1404/11	✓	✓	✓	✓	✓	✓		2KJ3603 - ■■■■■ - ■■ F2
113.75	13	355	6 760	0.22	455/4	✓	✓	✓	✓	✓	✓		2KJ3603 - ■■■■■ - ■■ E2
105.00	14	355	6 510	0.26	105/1	✓	✓	✓	✓	✓	✓		2KJ3603 - ■■■■■ - ■■ D2
91.93	16	350	6 160	0.32	1287/14	✓	✓	✓	✓	✓	✓		2KJ3603 - ■■■■■ - ■■ C2
80.60	18	330	5 930	0.32	403/5	✓	✓	✓	✓	✓	✓		2KJ3603 - ■■■■■ - ■■ B2
73.12	20	315	5 770	0.44	585/8	✓	✓	✓	✓	✓	✓		2KJ3603 - ■■■■■ - ■■ A2
68.82	21	305	5 680	0.51	1170/17	✓	✓	✓	✓	✓	✓		2KJ3603 - ■■■■■ - ■■ X1
60.67	24	285	5 500	0.58	182/3	✓	✓	✓	✓	✓	✓		2KJ3603 - ■■■■■ - ■■ W1
52.65	28	265	5 290	0.78	1053/20	✓	✓	✓	✓	✓	✓		2KJ3603 - ■■■■■ - ■■ V1
49.87	29	320	4 250	0.08	748/15	✓	✓	✓	✓				2KJ3603 - ■■■■■ - ■■ U1
43.27	34	350	3 680	0.10	649/15	✓	✓	✓	✓				2KJ3603 - ■■■■■ - ■■ T1
39.33	37	400	3 050	0.12	118/3	✓	✓	✓	✓				2KJ3603 - ■■■■■ - ■■ S1
33.73	43	375	2 940	0.15	506/15	✓	✓	✓	✓				2KJ3603 - ■■■■■ - ■■ R1
30.67	47	385	2 660	0.19	92/3	✓	✓	✓	✓				2KJ3603 - ■■■■■ - ■■ Q1
26.89	54	360	2 620	0.23	242/9	✓	✓	✓	✓	✓	✓		2KJ3603 - ■■■■■ - ■■ P1
24.00	60	345	2 540	0.28	24/1	✓	✓	✓	✓	✓	✓		2KJ3603 - ■■■■■ - ■■ N1
21.39	68	330	2 460	0.34	385/18	✓	✓	✓	✓	✓	✓		2KJ3603 - ■■■■■ - ■■ M1
19.74	73	315	2 450	0.41	770/39	✓	✓	✓	✓	✓	✓		2KJ3603 - ■■■■■ - ■■ L1
17.29	84	300	2 350	0.51	121/7	✓	✓	✓	✓	✓	✓		2KJ3603 - ■■■■■ - ■■ K1
15.16	96	285	2 270	0.56	682/45	✓	✓	✓	✓	✓	✓		2KJ3603 - ■■■■■ - ■■ J1
13.75	105	275	2 200	0.73	55/4	✓	✓	✓	✓	✓	✓		2KJ3603 - ■■■■■ - ■■ H1
12.94	112	270	2 160	0.85	220/17	✓	✓	✓	✓	✓	✓		2KJ3603 - ■■■■■ - ■■ G1
11.41	127	255	2 100	1.02	308/27	✓	✓	✓	✓	✓	✓		2KJ3603 - ■■■■■ - ■■ F1
9.90	146	245	1 990	1.36	99/10	✓	✓	✓	✓	✓	✓		2KJ3603 - ■■■■■ - ■■ E1
9.00	161	255	1 140	1.03	9/1	✓	✓	✓	✓	✓	✓		2KJ3603 - ■■■■■ - ■■ D1
8.47	171	255	1 290	1.18	144/17	✓	✓	✓	✓	✓	✓		2KJ3603 - ■■■■■ - ■■ C1
7.47	194	240	1 580	1.45	112/15	✓	✓	✓	✓	✓	✓		2KJ3603 - ■■■■■ - ■■ B1
6.48	224	230	1 850	1.93	162/25	✓	✓	✓	✓	✓	✓		2KJ3603 - ■■■■■ - ■■ A1

© Siemens AG 2017

Selection and ordering data (continued)

i	n_2	T_{2N}	F_{R2}	J_G	R_{ex}	Motor frame size							Article No.
-	rpm	Nm	N	10^{-4} kgm²	-	63	71	80	90	100	112	132	
C.69													
360.00	4.0	675	10 600	0.07	1079/3	✓	✓						2KJ3604 - ■■■■■ - ■■ M2
319.80	4.5	675	10 600	0.09	1599/5	✓	✓	✓					2KJ3604 - ■■■■■ - ■■ L2
280.80	5.2	675	10 600	0.11	1404/5	✓	✓	✓					2KJ3604 - ■■■■■ - ■■ K2
255.27	5.7	675	10 600	0.13	2808/11	✓	✓	✓	✓				2KJ3604 - ■■■■■ - ■■ J2
218.40	6.6	675	10 600	0.16	1092/5	✓	✓	✓	✓				2KJ3604 - ■■■■■ - ■■ H2
198.55	7.3	675	10 600	0.19	2184/11	✓	✓	✓	✓				2KJ3604 - ■■■■■ - ■■ G2
175.50	8.3	665	10 600	0.23	351/2	✓	✓	✓	✓	✓	✓		2KJ3604 - ■■■■■ - ■■ F2
159.55	9.1	640	10 700	0.30	1755/11	✓	✓	✓	✓	✓	✓		2KJ3604 - ■■■■■ - ■■ E2
139.75	10	590	10 500	0.35	559/4	✓	✓	✓	✓	✓	✓		2KJ3604 - ■■■■■ - ■■ D2
129.00	11	565	10 300	0.42	129/1	✓	✓	✓	✓	✓	✓		2KJ3604 - ■■■■■ - ■■ C2
114.21	13	535	9 990	0.52	1599/14	✓	✓	✓	✓	✓	✓	✓	2KJ3604 - ■■■■■ - ■■ B2
102.50	14	675	8 310	0.10	205/2	✓	✓	✓	✓				2KJ3604 - ■■■■■ - ■■ A2
90.00	16	675	7 790	0.12	90/1	✓	✓	✓	✓				2KJ3604 - ■■■■■ - ■■ X1
81.82	18	675	7 410	0.15	900/11	✓	✓	✓	✓				2KJ3604 - ■■■■■ - ■■ W1
70.00	21	660	6 920	0.18	70/1	✓	✓	✓	✓				2KJ3604 - ■■■■■ - ■■ V1
63.64	23	640	6 700	0.22	700/11	✓	✓	✓	✓				2KJ3604 - ■■■■■ - ■■ U1
56.25	26	610	6 460	0.27	225/4	✓	✓	✓	✓	✓	✓		2KJ3604 - ■■■■■ - ■■ T1
51.14	28	580	6 320	0.34	1125/22	✓	✓	✓	✓	✓	✓		2KJ3604 - ■■■■■ - ■■ S1
44.79	32	545	6 110	0.41	1075/24	✓	✓	✓	✓	✓	✓		2KJ3604 - ■■■■■ - ■■ R1
41.35	35	525	5 980	0.49	1075/26	✓	✓	✓	✓	✓	✓		2KJ3604 - ■■■■■ - ■■ Q1
36.61	40	500	5 770	0.61	1025/28	✓	✓	✓	✓	✓	✓	✓	2KJ3604 - ■■■■■ - ■■ P1
30.00	48	545	4 560	0.46	30/1	✓	✓	✓	✓	✓	✓		2KJ3604 - ■■■■■ - ■■ N1
26.28	55	515	4 410	0.56	473/18	✓	✓	✓	✓	✓	✓		2KJ3604 - ■■■■■ - ■■ M1
24.26	60	500	4 300	0.67	946/39	✓	✓	✓	✓	✓	✓		2KJ3604 - ■■■■■ - ■■ L1
21.48	68	475	4 160	0.83	451/21	✓	✓	✓	✓	✓	✓	✓	2KJ3604 - ■■■■■ - ■■ K1
17.88	81	440	3 960	1.17	143/8	✓	✓	✓	✓	✓	✓	✓	2KJ3604 - ■■■■■ - ■■ J1
15.88	91	360	3 950	0.88	1032/65	✓	✓	✓	✓	✓	✓		2KJ3604 - ■■■■■ - ■■ H1
14.06	103	355	3 730	1.11	492/35	✓	✓	✓	✓	✓	✓	✓	2KJ3604 - ■■■■■ - ■■ G1
11.70	124	360	3 310	1.56	117/10	✓	✓	✓	✓	✓	✓	✓	2KJ3604 - ■■■■■ - ■■ F1
11.01	132	360	3 180	1.79	936/85	✓	✓	✓	✓	✓	✓	✓	2KJ3604 - ■■■■■ - ■■ E1
9.87	147	360	2 890	2.10	148/15	✓	✓	✓	✓	✓	✓	✓	2KJ3604 - ■■■■■ - ■■ D1
8.40	173	360	3 110	2.90	42/5	✓	✓	✓	✓	✓	✓	✓	2KJ3604 - ■■■■■ - ■■ C1
7.20	201	360	3 170	3.90	36/5			✓	✓	✓	✓	✓	2KJ3604 - ■■■■■ - ■■ B1
6.20	234	355	3 190	5.20	31/5			✓	✓	✓	✓	✓	2KJ3604 - ■■■■■ - ■■ A1

© Siemens AG 2017

Selection and ordering data (continued)

i	n_2	T_{2N}	F_{R2}	J_G	R_{ex}	Motor frame size							Article No.
-	rpm	Nm	N	10^{-4} kgm²	-	63	71	80	90	100	112	132	
C.89													
363.00	4	1 450	16 200	0.47	3627/10		✓	✓	✓				2KJ3605 - ■■■■■ - ■■ N2
329.73	4.4	1 450	16 200	0.57	3627/11		✓	✓	✓				2KJ3605 - ■■■■■ - ■■ M2
295.75	4.9	1 450	16 200	0.78	1183/4		✓	✓	✓	✓	✓		2KJ3605 - ■■■■■ - ■■ L2
265.91	5.5	1 450	16 200	0.89	2925/11		✓	✓	✓	✓	✓		2KJ3605 - ■■■■■ - ■■ K2
240.50	6	1 450	16 200	1.00	481/2		✓	✓	✓	✓	✓		2KJ3605 - ■■■■■ - ■■ J2
222.00	6.5	1 450	16 200	1.18	222/1		✓	✓	✓	✓	✓		2KJ3605 - ■■■■■ - ■■ H2
203.36	7.1	1 450	16 200	1.52	2847/14		✓	✓	✓	✓	✓	✓	2KJ3605 - ■■■■■ - ■■ G2
170.62	8.5	1 360	16 300	1.67	1365/8		✓	✓	✓	✓	✓	✓	2KJ3605 - ■■■■■ - ■■ F2
160.59	9	1 330	16 300	1.91	2730/17		✓	✓	✓	✓	✓	✓	2KJ3605 - ■■■■■ - ■■ E2
147.33	9.8	1 280	16 300	2.10	442/3		✓	✓	✓	✓	✓	✓	2KJ3605 - ■■■■■ - ■■ D2
128.70	11	1 190	16 300	3.00	1287/10		✓	✓	✓	✓	✓	✓	2KJ3605 - ■■■■■ - ■■ C2
115.23	13	1 120	15 900	3.70	2535/22			✓	✓	✓	✓	✓	2KJ3605 - ■■■■■ - ■■ B2
100.75	14	1 050	15 300	4.40	403/4			✓	✓	✓	✓	✓	2KJ3605 - ■■■■■ - ■■ A2
86.48	17	985	14 600	4.90	1989/23			✓	✓	✓	✓	✓	2KJ3605 - ■■■■■ - ■■ X1
76.44	19	930	14 100	6.30	1911/25			✓	✓	✓	✓	✓	2KJ3605 - ■■■■■ - ■■ W1
65.00	22	865	13 400	8.10	65/1					✓	✓	✓	2KJ3605 - ■■■■■ - ■■ V1
55.61	26	1 450	8 630	0.89	1001/18		✓	✓	✓	✓	✓		2KJ3605 - ■■■■■ - ■■ U1
50.00	29	1 430	8 160	1.02	50/1		✓	✓	✓	✓	✓		2KJ3605 - ■■■■■ - ■■ T1
45.22	32	1 380	7 910	1.15	407/9		✓	✓	✓	✓	✓		2KJ3605 - ■■■■■ - ■■ S1
41.74	35	1 340	7 720	1.35	1628/39		✓	✓	✓	✓	✓		2KJ3605 - ■■■■■ - ■■ R1
38.24	38	1 300	7 510	1.73	803/21		✓	✓	✓	✓	✓	✓	2KJ3605 - ■■■■■ - ■■ Q1
32.08	45	1 220	7 110	1.97	385/12		✓	✓	✓	✓	✓	✓	2KJ3605 - ■■■■■ - ■■ P1
30.20	48	1 200	6 950	2.20	1540/51		✓	✓	✓	✓	✓	✓	2KJ3605 - ■■■■■ - ■■ N1
27.70	52	1 140	6 890	2.50	748/27		✓	✓	✓	✓	✓	✓	2KJ3605 - ■■■■■ - ■■ M1
25.03	58	1 090	5 490	2.10	876/35		✓	✓	✓	✓	✓	✓	2KJ3605 - ■■■■■ - ■■ L1
21.00	69	1 070	4 480	2.50	21/1		✓	✓	✓	✓	✓	✓	2KJ3605 - ■■■■■ - ■■ K1
19.76	73	1 120	3 400	2.80	336/17		✓	✓	✓	✓	✓	✓	2KJ3605 - ■■■■■ - ■■ J1
18.13	80	1 110	3 180	3.20	272/15		✓	✓	✓	✓	✓	✓	2KJ3605 - ■■■■■ - ■■ H1
15.84	92	1 110	4 150	4.40	396/25		✓	✓	✓	✓	✓	✓	2KJ3605 - ■■■■■ - ■■ G1
14.18	102	1 070	4 810	5.40	156/11			✓	✓	✓	✓	✓	2KJ3605 - ■■■■■ - ■■ F1
12.40	117	1 010	5 490	6.60	62/5			✓	✓	✓	✓	✓	2KJ3605 - ■■■■■ - ■■ E1
10.64	136	960	5 620	8.00	1224/115			✓	✓	✓	✓	✓	2KJ3605 - ■■■■■ - ■■ D1
9.41	154	915	5 680	10.00	1176/125			✓	✓	✓	✓	✓	2KJ3605 - ■■■■■ - ■■ C1
8.00	181	840	5 710	14.00	8/1					✓	✓	✓	2KJ3605 - ■■■■■ - ■■ B1
6.86	211	720	5 690	18.00	48/7					✓	✓	✓	2KJ3605 - ■■■■■ - ■■ A1

© Siemens AG 2017

Selection and ordering data

i	n_2	T_{2N}	F_{R2}	J_G	R_{ex}	Motor frame size							Article No.
-	rpm	Nm	N	10^{-4} kgm²	-	63	71	80	90	100	112	132	
C.29-D19													
9 219	0.16	80	4 280	0.02	37750064/4095	✓	✓						**2KJ3621 - ■■■■■ - ■■ Q1**
8 163	0.18	80	4 280	0.03	18570596/2275	✓	✓						**2KJ3621 - ■■■■■ - ■■ P1**
7 092	0.20	81	4 270	0.04	16135108/2275	✓	✓						**2KJ3621 - ■■■■■ - ■■ N1**
6 448	0.22	81	4 270	0.04	2933656/455	✓	✓						**2KJ3621 - ■■■■■ - ■■ M1**
5 487	0.26	82	4 270	0.06	12481876/2275	✓	✓						**2KJ3621 - ■■■■■ - ■■ L1**
4 988	0.29	82	4 270	0.07	2269432/455	✓	✓						**2KJ3621 - ■■■■■ - ■■ K1**
4 349	0.33	83	4 260	0.08	152218/35	✓	✓						**2KJ3621 - ■■■■■ - ■■ J1**
3 893	0.37	84	4 260	0.11	1771264/455	✓	✓						**2KJ3621 - ■■■■■ - ■■ H1**
3 457	0.42	84	4 260	0.13	4718758/1365	✓	✓						**2KJ3621 - ■■■■■ - ■■ G1**
3 191	0.45	84	4 260	0.16	18875032/5915	✓	✓						**2KJ3621 - ■■■■■ - ■■ F1**
2 772	0.52	85	4 250	0.17	8828644/3185	✓	✓						**2KJ3621 - ■■■■■ - ■■ E1**
2 409	0.60	86	4 250	0.18	5479848/2275	✓	✓						**2KJ3621 - ■■■■■ - ■■ D1**
2 175	0.67	86	4 250	0.22	76109/35	✓	✓						**2KJ3621 - ■■■■■ - ■■ C1**
2 047	0.71	86	4 250	0.26	71632/35	✓	✓						**2KJ3621 - ■■■■■ - ■■ B1**
1 784	0.81	87	4 240	0.29	2435488/1365	✓	✓						**2KJ3621 - ■■■■■ - ■■ A1**
C.29-Z19													
1 744	0.83	87	4 240	0.02	1020272/585	✓	✓						**2KJ3620 - ■■■■■ - ■■ S1**
1 544	0.94	87	4 240	0.03	501908/325	✓	✓	✓					**2KJ3620 - ■■■■■ - ■■ R1**
1 342	1.1	88	4 240	0.04	436084/325	✓	✓	✓					**2KJ3620 - ■■■■■ - ■■ Q1**
1 220	1.2	88	4 240	0.05	79288/65	✓	✓	✓					**2KJ3620 - ■■■■■ - ■■ P1**
1 038	1.4	89	4 230	0.07	337348/325	✓	✓	✓					**2KJ3620 - ■■■■■ - ■■ N1**
944	1.5	90	4 230	0.08	61336/65	✓	✓	✓					**2KJ3620 - ■■■■■ - ■■ M1**
823	1.8	90	4 230	0.09	4114/5	✓	✓	✓					**2KJ3620 - ■■■■■ - ■■ L1**
736	2.0	91	4 220	0.12	47872/65	✓	✓	✓					**2KJ3620 - ■■■■■ - ■■ K1**
654	2.2	91	4 220	0.15	127534/195	✓	✓	✓					**2KJ3620 - ■■■■■ - ■■ J1**
604	2.4	91	4 220	0.18	510136/845	✓	✓	✓					**2KJ3620 - ■■■■■ - ■■ H1**
524	2.8	92	4 220	0.20	238612/455	✓	✓	✓					**2KJ3620 - ■■■■■ - ■■ G1**
456	3.2	93	4 210	0.21	148104/325	✓	✓	✓					**2KJ3620 - ■■■■■ - ■■ F1**
411	3.5	93	4 210	0.27	2057/5	✓	✓	✓					**2KJ3620 - ■■■■■ - ■■ E1**
387	3.7	93	4 210	0.32	1936/5	✓	✓	✓					**2KJ3620 - ■■■■■ - ■■ D1**
337.56	4.3	94	4 210	0.36	65824/195	✓	✓	✓					**2KJ3620 - ■■■■■ - ■■ C1**
311.44	4.7	94	4 210	0.19	255068/819	✓	✓	✓					**2KJ3620 - ■■■■■ - ■■ B1**
270.54	5.4	95	4 200	0.22	119306/441	✓	✓	✓					**2KJ3620 - ■■■■■ - ■■ A1**

© Siemens AG 2017

Selection and ordering data (continued)

i	n_2	T_{2N}	F_{R2}	J_G	R_{ex}	Motor frame size							Article No.
-	rpm	Nm	N	10^{-4} kgm²	-	63	71	80	90	100	112	132	
C.39-D19													
11 553	0.13	160	6 300	0.06	150183/13	✓	✓						**2KJ3623 - ■■■■■ - ■■ S1**
10 502	0.14	160	6 300	0.07	136530/13	✓	✓						**2KJ3623 - ■■■■■ - ■■ R1**
9 219	0.16	156	6 320	0.02	37750064/4095	✓	✓						**2KJ3623 - ■■■■■ - ■■ Q1**
8 163	0.18	157	6 310	0.03	18570596/2275	✓	✓						**2KJ3623 - ■■■■■ - ■■ P1**
7 092	0.20	157	6 310	0.04	16135108/2275	✓	✓						**2KJ3623 - ■■■■■ - ■■ N1**
6 448	0.22	158	6 310	0.04	2933656/455	✓	✓						**2KJ3623 - ■■■■■ - ■■ M1**
5 487	0.26	159	6 300	0.06	12481876/2275	✓	✓						**2KJ3623 - ■■■■■ - ■■ L1**
4 988	0.29	159	6 300	0.07	2269432/455	✓	✓						**2KJ3623 - ■■■■■ - ■■ K1**
4 349	0.33	160	6 300	0.08	152218/35	✓	✓						**2KJ3623 - ■■■■■ - ■■ J1**
3 893	0.37	161	6 300	0.11	1771264/455	✓	✓						**2KJ3623 - ■■■■■ - ■■ H1**
3 457	0.42	161	6 300	0.13	4718758/1365	✓	✓						**2KJ3623 - ■■■■■ - ■■ G1**
3 191	0.45	162	6 290	0.16	18875032/5915	✓	✓						**2KJ3623 - ■■■■■ - ■■ F1**
2 772	0.52	163	6 290	0.17	8828644/3185	✓	✓						**2KJ3623 - ■■■■■ - ■■ E1**
2 409	0.60	165	6 280	0.18	5479848/2275	✓	✓						**2KJ3623 - ■■■■■ - ■■ D1**
2 175	0.67	166	6 280	0.22	76109/35	✓	✓						**2KJ3623 - ■■■■■ - ■■ C1**
2 047	0.71	167	6 270	0.26	71632/35	✓	✓						**2KJ3623 - ■■■■■ - ■■ B1**
1 784	0.81	169	6 270	0.29	2435488/1365	✓	✓						**2KJ3623 - ■■■■■ - ■■ A1**
C.39-Z19													
1 744	0.83	169	6 270	0.02	1020272/585	✓	✓						**2KJ3622 - ■■■■■ - ■■ S1**
1 544	0.94	171	6 260	0.03	501908/325	✓	✓	✓					**2KJ3622 - ■■■■■ - ■■ R1**
1 342	1.1	173	6 250	0.04	436084/325	✓	✓	✓					**2KJ3622 - ■■■■■ - ■■ Q1**
1 220	1.2	173	6 250	0.05	79288/65	✓	✓	✓					**2KJ3622 - ■■■■■ - ■■ P1**
1 038	1.4	175	6 240	0.07	337348/325	✓	✓	✓					**2KJ3622 - ■■■■■ - ■■ N1**
944	1.5	175	6 240	0.08	61336/65	✓	✓	✓					**2KJ3622 - ■■■■■ - ■■ M1**
823	1.8	176	6 240	0.09	4114/5	✓	✓	✓					**2KJ3622 - ■■■■■ - ■■ L1**
736	2.0	177	6 240	0.12	47872/65	✓	✓	✓					**2KJ3622 - ■■■■■ - ■■ K1**
654	2.2	178	6 230	0.15	127534/195	✓	✓	✓					**2KJ3622 - ■■■■■ - ■■ J1**
604	2.4	179	6 230	0.18	510136/845	✓	✓	✓					**2KJ3622 - ■■■■■ - ■■ H1**
524	2.8	180	6 230	0.20	238612/455	✓	✓	✓					**2KJ3622 - ■■■■■ - ■■ G1**
456	3.2	181	6 220	0.21	148104/325	✓	✓	✓					**2KJ3622 - ■■■■■ - ■■ F1**
411	3.5	182	6 220	0.27	2057/5	✓	✓	✓					**2KJ3622 - ■■■■■ - ■■ E1**
387	3.7	182	6 220	0.32	1936/5	✓	✓	✓					**2KJ3622 - ■■■■■ - ■■ D1**
337.56	4.3	183	6 210	0.36	65824/195	✓	✓	✓					**2KJ3622 - ■■■■■ - ■■ C1**
311.44	4.7	184	6 210	0.19	255068/819	✓	✓	✓					**2KJ3622 - ■■■■■ - ■■ B1**
270.54	5.4	185	6 210	0.22	119306/441	✓	✓	✓					**2KJ3622 - ■■■■■ - ■■ A1**

© Siemens AG 2017

Selection and ordering data (continued)

i	n_2	T_{2N}	F_{R2}	J_G	R_{ex}	Motor frame size							Article No.
-	rpm	Nm	N	10^{-4} kgm²	-	63	71	80	90	100	112	132	
C.49-D19													
11 463	0.13	270	8 640	0.04	2006103/175	✓	✓						**2KJ3625 - ■■■■■ - ■■ N1**
10 421	0.14	270	8 640	0.04	364746/35	✓	✓						**2KJ3625 - ■■■■■ - ■■ M1**
8 868	0.16	270	8 640	0.06	1551891/175	✓	✓						**2KJ3625 - ■■■■■ - ■■ L1**
8 062	0.18	270	8 640	0.07	282162/35	✓	✓						**2KJ3625 - ■■■■■ - ■■ K1**
7 029	0.21	275	8 630	0.08	492063/70	✓	✓						**2KJ3625 - ■■■■■ - ■■ J1**
6 292	0.23	275	8 630	0.11	220224/35	✓	✓						**2KJ3625 - ■■■■■ - ■■ H1**
5 588	0.26	275	8 630	0.13	391127/70	✓	✓						**2KJ3625 - ■■■■■ - ■■ G1**
5 158	0.28	275	8 630	0.16	2346762/455	✓	✓						**2KJ3625 - ■■■■■ - ■■ F1**
4 480	0.32	280	8 610	0.17	1097679/245	✓	✓						**2KJ3625 - ■■■■■ - ■■ E1**
3 893	0.37	280	8 730	0.18	681318/175	✓	✓						**2KJ3625 - ■■■■■ - ■■ D1**
3 515	0.41	280	8 610	0.22	492063/140	✓	✓						**2KJ3625 - ■■■■■ - ■■ C1**
3 308	0.44	285	8 600	0.26	1968252/595	✓	✓						**2KJ3625 - ■■■■■ - ■■ B1**
2 884	0.50	285	8 600	0.29	100936/35	✓	✓						**2KJ3625 - ■■■■■ - ■■ A1**
C.49-Z19													
2 819	0.51	285	8 600	0.02	42284/15	✓	✓						**2KJ3624 - ■■■■■ - ■■ V1**
2 496	0.58	290	8 590	0.03	62403/25	✓	✓	✓					**2KJ3624 - ■■■■■ - ■■ U1**
2 169	0.67	295	8 570	0.04	54219/25	✓	✓	✓					**2KJ3624 - ■■■■■ - ■■ T1**
1 972	0.74	295	8 570	0.05	9858/5	✓	✓	✓					**2KJ3624 - ■■■■■ - ■■ S1**
1678	0.86	305	8 540	0.07	41943/25	✓	✓	✓					**2KJ3624 - ■■■■■ - ■■ R1**
1 525	0.95	305	8 540	0.08	7626/5	✓	✓	✓					**2KJ3624 - ■■■■■ - ■■ Q1**
1 330	1.1	315	8 510	0.10	13299/10	✓	✓	✓					**2KJ3624 - ■■■■■ - ■■ P1**
1 190	1.2	320	8 500	0.13	5952/5	✓	✓	✓					**2KJ3624 - ■■■■■ - ■■ N1**
1 057	1.4	325	8 480	0.15	10571/10	✓	✓	✓					**2KJ3624 - ■■■■■ - ■■ M1**
976	1.5	330	8 470	0.18	63426/65	✓	✓	✓					**2KJ3624 - ■■■■■ - ■■ L1**
848	1.7	340	8 440	0.21	29667/35	✓	✓	✓					**2KJ3624 - ■■■■■ - ■■ K1**
737	2.0	340	8 440	0.21	18414/25	✓	✓	✓					**2KJ3624 - ■■■■■ - ■■ J1**
665	2.2	340	8 440	0.27	13299/20	✓	✓	✓					**2KJ3624 - ■■■■■ - ■■ H1**
626	2.3	345	8 430	0.32	53196/85	✓	✓	✓					**2KJ3624 - ■■■■■ - ■■ G1**
546	2.7	345	8 430	0.37	2728/5	✓	✓	✓					**2KJ3624 - ■■■■■ - ■■ F1**
503	2.9	345	8 430	0.20	10571/21	✓	✓	✓					**2KJ3624 - ■■■■■ - ■■ E1**
437	3.3	345	8 430	0.23	128557/294	✓	✓	✓					**2KJ3624 - ■■■■■ - ■■ D1**
380	3.8	350	8 410	0.24	13299/35	✓	✓	✓					**2KJ3624 - ■■■■■ - ■■ C1**
343.03	4.2	350	8 410	0.31	57629/168	✓	✓	✓					**2KJ3624 - ■■■■■ - ■■ B1**
322.85	4.5	350	8 410	0.36	115258/357	✓	✓	✓					**2KJ3624 - ■■■■■ - ■■ A1**

© Siemens AG 2017

Selection and ordering data (continued)

i	n_2	T_{2N}	F_{R2}	J_G	R_{ex}	Motor frame size							Article No.
-	rpm	Nm	N	10^{-4} kgm²	-	63	71	80	90	100	112	132	
C.69-D19													
18 949	0.08	495	11 000	0.02	5172970/273	✓	✓						**2KJ3627 - ■■■■■ - ■■ Q1**
16 779	0.09	495	11 000	0.03	3053721/182	✓	✓						**2KJ3627 - ■■■■■ - ■■ P1**
14 578	0.10	495	11 000	0.04	2653233/182	✓	✓						**2KJ3627 - ■■■■■ - ■■ N1**
13 253	0.11	495	11 000	0.04	1206015/91	✓	✓						**2KJ3627 - ■■■■■ - ■■ M1**
11 277	0.13	500	11 000	0.06	2052501/182	✓	✓						**2KJ3627 - ■■■■■ - ■■ L1**
10 252	0.14	500	11 000	0.07	932955/91	✓	✓						**2KJ3627 - ■■■■■ - ■■ K1**
8 939	0.16	500	11 000	0.08	250305/28	✓	✓						**2KJ3627 - ■■■■■ - ■■ J1**
8 002	0.18	500	12 200	0.11	728160/91	✓	✓						**2KJ3627 - ■■■■■ - ■■ H1**
7 106	0.20	500	11 000	0.13	2586485/364	✓	✓						**2KJ3627 - ■■■■■ - ■■ G1**
6 559	0.22	500	11 000	0.16	7759455/1183	✓	✓						**2KJ3627 - ■■■■■ - ■■ F1**
5 698	0.25	500	11 000	0.17	7258845/1274	✓	✓						**2KJ3627 - ■■■■■ - ■■ E1**
4 951	0.29	505	11 000	0.18	450549/91	✓	✓						**2KJ3627 - ■■■■■ - ■■ D1**
4 470	0.32	505	11 000	0.22	250305/56	✓	✓						**2KJ3627 - ■■■■■ - ■■ C1**
4 207	0.34	505	11 000	0.26	500610/119	✓	✓						**2KJ3627 - ■■■■■ - ■■ B1**
3 667	0.40	505	11 000	0.29	333740/91	✓	✓						**2KJ3627 - ■■■■■ - ■■ A1**
C.69-D19													
3 585	0.40	505	11 000	0.02	139810/39	✓	✓						**2KJ3626 - ■■■■■ - ■■ V1**
3 174	0.46	510	11 000	0.03	82533/26	✓	✓	✓					**2KJ3626 - ■■■■■ - ■■ U1**
2 758	0.53	510	11 000	0.04	71709/26	✓	✓	✓					**2KJ3626 - ■■■■■ - ■■ T1**
2 507	0.58	515	11 000	0.05	32595/13	✓	✓	✓					**2KJ3626 - ■■■■■ - ■■ S1**
2 134	0.68	515	11 000	0.07	55473/26	✓	✓	✓					**2KJ3626 - ■■■■■ - ■■ R1**
1 940	0.75	520	11 000	0.08	25215/13	✓	✓	✓					**2KJ3626 - ■■■■■ - ■■ Q1**
1 691	0.86	520	11 000	0.09	6765/4	✓	✓	✓					**2KJ3626 - ■■■■■ - ■■ P1**
1 514	0.96	525	11 000	0.12	19680/13	✓	✓	✓					**2KJ3626 - ■■■■■ - ■■ N1**
1 344	1.1	530	11 000	0.15	69905/52	✓	✓	✓					**2KJ3626 - ■■■■■ - ■■ M1**
1 241	1.2	530	11 000	0.18	209715/169	✓	✓	✓					**2KJ3626 - ■■■■■ - ■■ L1**
1 078	1.3	535	10 900	0.20	196185/182	✓	✓	✓					**2KJ3626 - ■■■■■ - ■■ K1**
937	1.5	540	10 900	0.21	12177/13	✓	✓	✓					**2KJ3626 - ■■■■■ - ■■ J1**
846	1.7	545	10 900	0.27	6765/8	✓	✓	✓					**2KJ3626 - ■■■■■ - ■■ H1**
796	1.8	550	10 900	0.32	13530/17	✓	✓	✓					**2KJ3626 - ■■■■■ - ■■ G1**
694	2.1	555	10 900	0.36	9020/13	✓	✓	✓					**2KJ3626 - ■■■■■ - ■■ F1**
640	2.3	560	10 900	0.19	349525/546	✓	✓	✓					**2KJ3626 - ■■■■■ - ■■ E1**
556	2.6	570	10 900	0.22	326975/588	✓	✓	✓					**2KJ3626 - ■■■■■ - ■■ D1**
483	3.0	580	10 800	0.23	6765/14	✓	✓	✓					**2KJ3626 - ■■■■■ - ■■ C1**
436	3.3	585	10 800	0.29	146575/336	✓	✓	✓					**2KJ3626 - ■■■■■ - ■■ B1**
411	3.5	590	10 800	0.35	146575/357	✓	✓	✓					**2KJ3626 - ■■■■■ - ■■ A1**

© Siemens AG 2017

Selection and ordering data (continued)

i	n_2	T_{2N}	F_{R2}	J_G	R_{ex}	Motor frame size							Article No.
-	rpm	Nm	N	10^{-4} kgm²	-	63	71	80	90	100	112	132	
C.89-D39													
18 243	0.08	850	16 300	0.05	93039401/5100	✓	✓						2KJ3630 - ■■■■■ - ■■ R1
16 585	0.09	855	16 300	0.07	93039401/5610	✓	✓	✓	✓				2KJ3630 - ■■■■■ - ■■ Q1
14 223	0.10	860	16 300	0.08	36269597/2550	✓	✓	✓	✓				2KJ3630 - ■■■■■ - ■■ P1
13 085	0.11	1 100	16 300	0.03	90088999/6885	✓	✓						2KJ3630 - ■■■■■ - ■■ N1
11 606	0.12	1 100	16 300	0.05	7833826/675	✓	✓						2KJ3630 - ■■■■■ - ■■ M1
10 070	0.14	1 100	16 300	0.05	231097867/22950	✓	✓						2KJ3630 - ■■■■■ - ■■ L1
9 154	0.16	1 100	16 300	0.07	21008897/2295	✓	✓	✓	✓				2KJ3630 - ■■■■■ - ■■ K1
7 851	0.18	1 100	16 300	0.08	90088999/11475	✓	✓	✓	✓				2KJ3630 - ■■■■■ - ■■ J1
7 137	0.20	1 100	16 300	0.10	16379818/2295	✓	✓	✓	✓				2KJ3630 - ■■■■■ - ■■ H1
6 258	0.23	1 110	16 300	0.12	43086043/6885	✓	✓	✓	✓	✓	✓		2KJ3630 - ■■■■■ - ■■ G1
5 586	0.26	1 110	16 300	0.15	1424332/255	✓	✓	✓	✓	✓	✓		2KJ3630 - ■■■■■ - ■■ F1
4 978	0.29	1 110	16 300	0.17	27418391/5508	✓	✓	✓	✓	✓	✓		2KJ3630 - ■■■■■ - ■■ E1
4 595	0.32	1 110	16 300	0.21	2109107/459	✓	✓	✓	✓	✓	✓		2KJ3630 - ■■■■■ - ■■ D1
4 023	0.36	1 110	16 300	0.25	6155149/1530	✓	✓	✓	✓	✓	✓		2KJ3630 - ■■■■■ - ■■ C1
3 527	0.41	1 120	16 300	0.23	121424303/34425	✓	✓	✓	✓	✓	✓		2KJ3630 - ■■■■■ - ■■ B1
3 200	0.45	1 120	16 300	0.33	3916913/1224	✓	✓	✓	✓	✓	✓		2KJ3630 - ■■■■■ - ■■ A1
C.89-Z39													
3 111	0.47	1 120	16 300	0.06	7560553/2430	✓	✓						2KJ3628 - ■■■■■ - ■■ T1
2 766	0.52	1 120	16 300	0.07	3734731/1350	✓	✓	✓	✓				2KJ3628 - ■■■■■ - ■■ S1
2 429	0.60	1 130	16 300	0.08	182182/75	✓	✓	✓	✓				2KJ3628 - ■■■■■ - ■■ R1
2 208	0.66	1 130	16 300	0.10	33124/15	✓	✓	✓	✓				2KJ3628 - ■■■■■ - ■■ Q1
1 889	0.77	1 140	16 300	0.12	1275274/675	✓	✓	✓	✓				2KJ3628 - ■■■■■ - ■■ P1
1 718	0.84	1 150	16 300	0.14	231868/135	✓	✓	✓	✓				2KJ3628 - ■■■■■ - ■■ N1
1 518	0.96	1 150	16 300	0.17	91091/60	✓	✓	✓	✓	✓	✓		2KJ3628 - ■■■■■ - ■■ M1
1 380	1.1	1 160	16 300	0.22	8281/6	✓	✓	✓	✓	✓	✓		2KJ3628 - ■■■■■ - ■■ L1
1 209	1.2	1 170	16 300	0.26	3916913/3240	✓	✓	✓	✓	✓	✓		2KJ3628 - ■■■■■ - ■■ K1
1 116	1.3	1 170	16 300	0.31	303301/270	✓	✓	✓	✓	✓	✓		2KJ3628 - ■■■■■ - ■■ J1
988	1.5	1 180	16 300	0.36	533533/540	✓	✓	✓	✓	✓	✓		2KJ3628 - ■■■■■ - ■■ H1
822	1.8	1 200	16 300	0.48	1184183/1440	✓	✓	✓	✓	✓	✓		2KJ3628 - ■■■■■ - ■■ G1
774	1.9	1 210	16 300	0.56	1184183/1530	✓	✓	✓	✓	✓	✓		2KJ3628 - ■■■■■ - ■■ F1
693	2.1	1 220	16 300	0.61	3370367/4860	✓	✓	✓	✓	✓	✓		2KJ3628 - ■■■■■ - ■■ E1
590	2.5	1 230	16 300	0.79	637637/1080	✓	✓	✓	✓	✓	✓		2KJ3628 - ■■■■■ - ■■ D1
506	2.9	1 260	16 300	1.03	91091/180			✓	✓	✓	✓		2KJ3628 - ■■■■■ - ■■ C1
436	3.3	1 280	16 300	1.31	2823821/6480			✓	✓	✓	✓		2KJ3628 - ■■■■■ - ■■ B1
360	4.0	1 310	16 300	0.59	793793/2208	✓	✓	✓	✓	✓	✓		2KJ3628 - ■■■■■ - ■■ A1

© Siemens AG 2017

Selection and ordering data

	n_{mot} = 2 800 rpm				n_{mot} = 1 400 rpm				n_{mot} = 900 rpm				
i	n_2	T_{2N}	P_{mot}	η	n_2	T_{2N}	P_{mot}	η	n_2	T_{2N}	P_{mot}	η	**Article No.**
-	rpm	Nm	kW	%	rpm	Nm	kW	%	rpm	Nm	kW	%	
C.29													
265.20	10.6	110	0.17	73	5.3	108	0.09	65	3.4	106	0.06	59	**2KJ3601 - ■■■■■ - ■■ M2**
230.10	12.2	110	0.19	74	6.1	108	0.10	67	3.9	106	0.07	61	**2KJ3601 - ■■■■■ - ■■ L2**
209.18	13.4	110	0.21	75	6.7	109	0.11	68	4.3	107	0.08	62	**2KJ3601 - ■■■■■ - ■■ K2**
179.40	15.6	110	0.24	76	7.8	109	0.13	70	5.0	107	0.09	64	**2KJ3601 - ■■■■■ - ■■ J2**
163.09	17.2	110	0.26	76	8.6	110	0.14	71	5.5	108	0.10	65	**2KJ3601 - ■■■■■ - ■■ H2**
143.00	19.6	110	0.30	76	9.8	110	0.16	72	6.3	108	0.11	67	**2KJ3601 - ■■■■■ - ■■ G2**
127.64	22	110	0.33	76	11.0	110	0.17	73	7.1	109	0.12	68	**2KJ3601 - ■■■■■ - ■■ F2**
113.75	25	110	0.38	76	12.3	110	0.19	74	7.9	109	0.13	70	**2KJ3601 - ■■■■■ - ■■ E2**
105.00	27	110	0.41	76	13.3	110	0.21	74	8.6	110	0.14	70	**2KJ3601 - ■■■■■ - ■■ D2**
91.93	30	110	0.46	76	15.2	110	0.23	75	9.8	110	0.16	72	**2KJ3601 - ■■■■■ - ■■ C2**
80.60	35	105	0.51	76	17.4	110	0.27	75	11.2	110	0.18	73	**2KJ3601 - ■■■■■ - ■■ B2**
73.12	38	101	0.53	76	19.1	110	0.29	75	12.3	110	0.19	74	**2KJ3601 - ■■■■■ - ■■ A2**
68.82	41	99	0.56	76	20	110	0.31	75	13.1	110	0.21	74	**2KJ3601 - ■■■■■ - ■■ X1**
60.67	46	95	0.61	75	23	110	0.35	76	14.8	110	0.23	74	**2KJ3601 - ■■■■■ - ■■ W1**
52.65	53	90	0.67	75	27	110	0.41	76	17.1	110	0.26	75	**2KJ3601 - ■■■■■ - ■■ V1**
49.87	56	105	0.69	90	28	102	0.34	87	18	100	0.22	84	**2KJ3601 - ■■■■■ - ■■ U1**
43.27	65	106	0.80	90	32	103	0.39	88	21	101	0.26	86	**2KJ3601 - ■■■■■ - ■■ T1**
39.33	71	106	0.88	90	36	103	0.44	89	23	101	0.28	86	**2KJ3601 - ■■■■■ - ■■ S1**
33.73	83	107	1.00	90	42	104	0.51	89	27	102	0.33	87	**2KJ3601 - ■■■■■ - ■■ R1**
32.64	86	92	0.91	92	43	90	0.45	90	28	88	0.30	87	**2KJ3601 - ■■■■■ - ■■ Q1**
28.32	99	93	1.10	92	49	90	0.51	90	32	89	0.34	88	**2KJ3601 - ■■■■■ - ■■ P1**
25.75	109	93	1.20	92	54	90	0.57	91	35	89	0.37	89	**2KJ3601 - ■■■■■ - ■■ N1**
22.08	127	94	1.40	92	63	91	0.66	91	41	89	0.43	89	**2KJ3601 - ■■■■■ - ■■ M1**
20.07	140	94	1.50	92	70	91	0.74	91	45	90	0.47	90	**2KJ3601 - ■■■■■ - ■■ L1**
17.60	159	93	1.7*	92	80	92	0.85	92	51	90	0.54	90	**2KJ3601 - ■■■■■ - ■■ K1**
15.71	178	89	1.8*	92	89	92	0.95	92	57	91	0.60	91	**2KJ3601 - ■■■■■ - ■■ J1**
14.00	200	86	2.0*	92	100	93	1.10	92	64	91	0.67	91	**2KJ3601 - ■■■■■ - ■■ H1**
12.92	217	83	2.1*	92	108	93	1.20	92	70	91	0.74	91	**2KJ3601 - ■■■■■ - ■■ G1**
11.31	248	79	2.3*	92	124	94	1.30	92	80	92	0.85	91	**2KJ3601 - ■■■■■ - ■■ F1**
9.92	282	74	2.4*	91	141	94	1.50	92	91	92	0.97	91	**2KJ3601 - ■■■■■ - ■■ E1**
9.00	311	71	2.6*	92	156	90	1.6*	92	100	93	1.10	92	**2KJ3601 - ■■■■■ - ■■ D1**
8.47	331	70	2.7*	91	165	88	1.7*	92	106	93	1.10	92	**2KJ3601 - ■■■■■ - ■■ C1**
7.47	375	66	2.8*	91	187	83	1.8*	92	120	93	1.30	92	**2KJ3601 - ■■■■■ - ■■ B1**
6.48	432	62	3.1*	91	216	78	1.9*	92	139	91	1.40	92	**2KJ3601 - ■■■■■ - ■■ A1**

* $P_{mot\ max}$ = 1.5 kW

© Siemens AG 2017

Selection and ordering data (continued)

	n_{mot} = 700 rpm				n_{mot} = 500 rpm				n_{mot} = 100 rpm				
i	n_2	T_{2N}	P_{mot}	η	n_2	T_{2N}	P_{mot}	η	n_2	T_{2N}	P_{mot}	η	**Article No.**
-	rpm	Nm	kW	%	rpm	Nm	kW	%	rpm	Nm	kW	%	
C.29													
265.20	2.6	104	<0.06	57	1.9	103	<0.06	54	0.38	95	<0.06	47	**2KJ3601 - ■■■■■ - ■■ M2**
230.10	3	105	0.06	58	2.2	104	<0.06	55	0.43	96	<0.06	48	**2KJ3601 - ■■■■■ - ■■ L2**
209.18	3.3	105	0.06	59	2.4	104	<0.06	56	0.48	97	<0.06	48	**2KJ3601 - ■■■■■ - ■■ K2**
179.40	3.9	106	0.07	61	2.8	105	<0.06	57	0.56	97	<0.06	48	**2KJ3601 - ■■■■■ - ■■ J2**
163.09	4.3	107	0.08	62	3.1	105	0.06	58	0.61	98	<0.06	48	**2KJ3601 - ■■■■■ - ■■ H2**
143.00	4.9	107	0.09	64	3.5	106	0.07	59	0.70	98	<0.06	48	**2KJ3601 - ■■■■■ - ■■ G2**
127.64	5.5	108	0.10	65	3.9	106	0.07	61	0.78	99	<0.06	49	**2KJ3601 - ■■■■■ - ■■ F2**
113.75	6.2	108	0.11	66	4.4	107	0.08	62	0.88	99	<0.06	49	**2KJ3601 - ■■■■■ - ■■ E2**
105.00	6.7	109	0.11	67	4.8	107	0.09	63	0.95	100	<0.06	49	**2KJ3601 - ■■■■■ - ■■ D2**
91.93	7.6	109	0.13	69	5.4	108	0.09	65	1.1	100	<0.06	50	**2KJ3601 - ■■■■■ - ■■ C2**
80.60	8.7	110	0.14	70	6.2	108	0.11	66	1.2	101	<0.06	50	**2KJ3601 - ■■■■■ - ■■ B2**
73.12	9.6	110	0.16	71	6.8	109	0.12	67	1.4	101	<0.06	51	**2KJ3601 - ■■■■■ - ■■ A2**
68.82	10.2	110	0.16	72	7.3	109	0.12	68	1.5	102	<0.06	51	**2KJ3601 - ■■■■■ - ■■ X1**
60.67	11.5	110	0.18	73	8.2	110	0.14	70	1.6	102	<0.06	52	**2KJ3601 - ■■■■■ - ■■ W1**
52.65	13.3	110	0.21	74	9.5	110	0.15	71	1.9	103	<0.06	53	**2KJ3601 - ■■■■■ - ■■ V1**
49.87	14.0	99	0.18	83	10.0	98	0.13	80	2.0	91	<0.06	73	**2KJ3601 - ■■■■■ - ■■ U1**
43.27	16.2	100	0.20	84	11.6	98	0.15	81	2.3	91	<0.06	74	**2KJ3601 - ■■■■■ - ■■ T1**
39.33	17.8	100	0.22	84	12.7	99	0.16	82	2.5	92	<0.06	74	**2KJ3601 - ■■■■■ - ■■ S1**
33.73	21	101	0.26	85	14.8	99	0.19	83	3.0	92	<0.06	74	**2KJ3601 - ■■■■■ - ■■ R1**
32.64	21	87	0.22	86	15.3	86	0.17	84	3.1	80	<0.06	77	**2KJ3601 - ■■■■■ - ■■ Q1**
28.32	25	88	0.27	87	17.7	86	0.19	84	3.5	80	<0.06	78	**2KJ3601 - ■■■■■ - ■■ P1**
25.75	27	88	0.29	87	19.4	87	0.21	85	3.9	81	<0.06	78	**2KJ3601 - ■■■■■ - ■■ N1**
22.08	32	89	0.34	88	23	87	0.25	86	4.5	81	<0.06	78	**2KJ3601 - ■■■■■ - ■■ M1**
20.07	35	89	0.37	89	25	88	0.27	87	5.0	82	<0.06	79	**2KJ3601 - ■■■■■ - ■■ L1**
17.60	40	89	0.42	89	28	88	0.30	87	5.7	82	0.06	79	**2KJ3601 - ■■■■■ - ■■ K1**
15.71	45	90	0.47	90	32	89	0.34	88	6.4	83	0.07	79	**2KJ3601 - ■■■■■ - ■■ J1**
14.00	50	90	0.53	90	36	89	0.38	89	7.1	83	0.08	80	**2KJ3601 - ■■■■■ - ■■ H1**
12.92	54	90	0.57	90	39	89	0.41	89	7.7	83	0.08	80	**2KJ3601 - ■■■■■ - ■■ G1**
11.31	62	91	0.65	91	44	90	0.46	90	8.8	84	0.10	81	**2KJ3601 - ■■■■■ - ■■ F1**
9.92	71	91	0.75	91	50	90	0.53	90	10.1	84	0.11	81	**2KJ3601 - ■■■■■ - ■■ E1**
9.00	78	92	0.82	91	56	91	0.59	91	11.1	85	0.12	82	**2KJ3601 - ■■■■■ - ■■ D1**
8.47	83	92	0.88	91	59	91	0.62	91	11.8	85	0.13	82	**2KJ3601 - ■■■■■ - ■■ C1**
7.47	94	93	1.00	92	67	91	0.71	91	13.4	85	0.15	83	**2KJ3601 - ■■■■■ - ■■ B1**
6.48	108	93	1.20	92	77	92	0.81	91	15.4	86	0.17	84	**2KJ3601 - ■■■■■ - ■■ A1**

© Siemens AG 2017

Selection and ordering data (continued)

	n_{mot} = 2 800 rpm				n_{mot} = 1 400 rpm				n_{mot} = 900 rpm				
i	n_2	T_{2N}	P_{mot}	η	n_2	T_{2N}	P_{mot}	η	n_2	T_{2N}	P_{mot}	η	**Article No.**
-	rpm	Nm	kW	%	rpm	Nm	kW	%	rpm	Nm	kW	%	
C.39													
299.00	9.4	194	0.27	71	4.7	192	0.15	64	3.0	189	0.10	58	**2KJ3602 - ■■■■■ - ■■ N2**
265.20	10.6	194	0.30	72	5.3	192	0.16	66	3.4	190	0.11	60	**2KJ3602 - ■■■■■ - ■■ M2**
230.10	12.2	194	0.34	73	6.1	193	0.18	68	3.9	191	0.13	62	**2KJ3602 - ■■■■■ - ■■ L2**
209.18	13.4	194	0.38	73	6.7	193	0.20	68	4.3	191	0.14	63	**2KJ3602 - ■■■■■ - ■■ K2**
179.40	15.6	194	0.44	73	7.8	193	0.23	70	5.0	192	0.16	65	**2KJ3602 - ■■■■■ - ■■ J2**
163.09	17.2	194	0.48	73	8.6	193	0.25	71	5.5	192	0.17	66	**2KJ3602 - ■■■■■ - ■■ H2**
143.00	19.6	194	0.55	73	9.8	194	0.28	71	6.3	193	0.19	68	**2KJ3602 - ■■■■■ - ■■ G2**
127.64	22	194	0.61	73	11	194	0.31	72	7.1	193	0.21	69	**2KJ3602 - ■■■■■ - ■■ F2**
113.75	25	181	0.66	73	12.3	194	0.35	72	7.9	193	0.23	70	**2KJ3602 - ■■■■■ - ■■ E2**
105.00	27	175	0.68	73	13.3	194	0.37	72	8.6	193	0.25	70	**2KJ3602 - ■■■■■ - ■■ D2**
91.93	30	165	0.72	72	15.2	194	0.43	72	9.8	194	0.28	71	**2KJ3602 - ■■■■■ - ■■ C2**
80.60	35	157	0.80	72	17.4	194	0.49	73	11.2	194	0.32	72	**2KJ3602 - ■■■■■ - ■■ B2**
73.12	38	150	0.84	72	19.1	189	0.52	73	12.3	194	0.35	72	**2KJ3602 - ■■■■■ - ■■ A2**
68.82	41	147	0.88	72	20	185	0.53	73	13.1	194	0.37	72	**2KJ3602 - ■■■■■ - ■■ X1**
60.67	46	139	0.94	72	23	175	0.58	73	14.8	194	0.41	73	**2KJ3602 - ■■■■■ - ■■ W1**
52.65	53	131	1.00	72	27	166	0.65	73	17.1	192	0.47	73	**2KJ3602 - ■■■■■ - ■■ V1**
49.87	56	195	1.30	89	28	198	0.66	89	18	194	0.41	89	**2KJ3602 - ■■■■■ - ■■ U1**
43.27	65	196	1.50	89	32	199	0.75	89	21	196	0.49	89	**2KJ3602 - ■■■■■ - ■■ T1**
39.33	71	196	1.60	89	36	200	0.85	89	23	196	0.53	89	**2KJ3602 - ■■■■■ - ■■ S1**
33.73	83	196	1.90	89	42	200	1.00	89	27	197	0.63	89	**2KJ3602 - ■■■■■ - ■■ R1**
32.64	86	200	2.00	91	43	210	1.00	91	28	205	0.68	90	**2KJ3602 - ■■■■■ - ■■ Q1**
28.32	99	200	2.30	91	49	225	1.30	91	32	225	0.84	90	**2KJ3602 - ■■■■■ - ■■ P1**
25.75	109	200	2.50	91	54	235	1.50	91	35	230	0.95	90	**2KJ3602 - ■■■■■ - ■■ N1**
22.08	127	198	2.90	91	63	235	1.70	91	41	230	1.10	91	**2KJ3602 - ■■■■■ - ■■ M1**
20.07	140	188	3.00	91	70	235	1.90	91	45	235	1.20	91	**2KJ3602 - ■■■■■ - ■■ L1**
17.60	159	180	3.3*	91	80	225	2.10	92	51	235	1.40	91	**2KJ3602 - ■■■■■ - ■■ K1**
15.71	178	172	3.5*	91	89	215	2.20	91	57	235	1.60	91	**2KJ3602 - ■■■■■ - ■■ J1**
14.00	200	164	3.8*	91	100	205	2.40	91	64	235	1.70	92	**2KJ3602 - ■■■■■ - ■■ H1**
12.92	217	159	4.0*	91	108	200	2.50	92	70	230	1.90	92	**2KJ3602 - ■■■■■ - ■■ G1**
11.31	248	152	4.3*	91	124	192	2.70	91	80	220	2.00	92	**2KJ3602 - ■■■■■ - ■■ F1**
9.92	282	145	4.7*	91	141	183	3.00	91	91	210	2.20	92	**2KJ3602 - ■■■■■ - ■■ E1**
9.00	311	137	4.9*	91	156	177	3.2*	91	100	205	2.30	92	**2KJ3602 - ■■■■■ - ■■ D1**
8.47	331	129	4.9*	91	165	173	3.3*	91	106	200	2.40	92	**2KJ3602 - ■■■■■ - ■■ C1**
7.47	375	114	4.9*	91	187	166	3.6*	91	120	192	2.60	92	**2KJ3602 - ■■■■■ - ■■ B1**
6.48	432	99	4.9*	91	216	157	3.9*	91	139	182	2.90	92	**2KJ3602 - ■■■■■ - ■■ A1**

* $P_{mot\ max}$ = 3 kW

© Siemens AG 2017

Selection and ordering data (continued)

	n_{mot} = 700 rpm				n_{mot} = 500 rpm				n_{mot} = 100 rpm				
i	n_2	T_{2N}	P_{mot}	η	n_2	T_{2N}	P_{mot}	η	n_2	T_{2N}	P_{mot}	η	**Article No.**
-	rpm	Nm	kW	%	rpm	Nm	kW	%	rpm	Nm	kW	%	
C.39													
299.00	2.3	187	0.08	55	1.7	184	0.06	52	0.33	170	<0.06	44	**2KJ3602 - ■■■■■ - ■■ N2**
265.20	2.6	188	0.09	57	1.9	185	0.07	53	0.38	167	<0.06	44	**2KJ3602 - ■■■■■ - ■■ M2**
230.10	3.0	189	0.10	58	2.2	186	0.08	54	0.43	164	<0.06	44	**2KJ3602 - ■■■■■ - ■■ L2**
209.18	3.3	190	0.11	59	2.4	187	0.09	55	0.48	162	<0.06	44	**2KJ3602 - ■■■■■ - ■■ K2**
179.40	3.9	191	0.13	62	2.8	188	0.10	57	0.56	160	<0.06	45	**2KJ3602 - ■■■■■ - ■■ J2**
163.09	4.3	191	0.14	63	3.1	189	0.11	58	0.61	160	<0.06	45	**2KJ3602 - ■■■■■ - ■■ H2**
143.00	4.9	192	0.15	64	3.5	190	0.12	60	0.70	160	<0.06	46	**2KJ3602 - ■■■■■ - ■■ G2**
127.64	5.5	192	0.17	66	3.9	191	0.13	61	0.78	161	<0.06	46	**2KJ3602 - ■■■■■ - ■■ F2**
113.75	6.2	193	0.19	67	4.4	191	0.14	63	0.88	162	<0.06	47	**2KJ3602 - ■■■■■ - ■■ E2**
105.00	6.7	193	0.20	68	4.8	192	0.15	64	0.95	163	<0.06	47	**2KJ3602 - ■■■■■ - ■■ D2**
91.93	7.6	193	0.22	69	5.4	192	0.17	66	1.1	166	<0.06	48	**2KJ3602 - ■■■■■ - ■■ C2**
80.60	8.7	193	0.25	70	6.2	193	0.19	67	1.2	168	<0.06	49	**2KJ3602 - ■■■■■ - ■■ B2**
73.12	9.6	194	0.28	71	6.8	193	0.20	68	1.4	170	<0.06	49	**2KJ3602 - ■■■■■ - ■■ A2**
68.82	10.2	194	0.29	71	7.3	193	0.21	69	1.5	172	<0.06	50	**2KJ3602 - ■■■■■ - ■■ X1**
60.67	11.5	194	0.32	72	8.2	193	0.24	70	1.6	176	0.06	51	**2KJ3602 - ■■■■■ - ■■ W1**
52.65	13.3	194	0.37	73	9.5	194	0.27	71	1.9	180	0.07	53	**2KJ3602 - ■■■■■ - ■■ V1**
49.87	14.0	192	0.32	88	10.0	190	0.23	86	2.0	177	0.06	66	**2KJ3602 - ■■■■■ - ■■ U1**
43.27	16.2	194	0.37	88	11.6	191	0.27	87	2.3	178	0.06	67	**2KJ3602 - ■■■■■ - ■■ T1**
39.33	17.8	194	0.41	88	12.7	192	0.29	88	2.5	179	0.07	68	**2KJ3602 - ■■■■■ - ■■ S1**
33.73	21	196	0.49	89	14.8	193	0.34	88	3.0	180	0.08	71	**2KJ3602 - ■■■■■ - ■■ R1**
32.64	21	200	0.51	88	15.3	197	0.37	86	3.1	174	0.08	76	**2KJ3602 - ■■■■■ - ■■ Q1**
28.32	25	220	0.66	89	17.7	215	0.47	87	3.5	192	0.09	76	**2KJ3602 - ■■■■■ - ■■ P1**
25.75	27	230	0.73	89	19.4	225	0.53	87	3.9	210	0.11	77	**2KJ3602 - ■■■■■ - ■■ N1**
22.08	32	230	0.86	90	23	225	0.62	88	4.5	210	0.13	77	**2KJ3602 - ■■■■■ - ■■ M1**
20.07	35	230	0.94	90	25	230	0.68	89	5.0	215	0.15	78	**2KJ3602 - ■■■■■ - ■■ L1**
17.60	40	230	1.10	91	28	230	0.76	90	5.7	215	0.16	79	**2KJ3602 - ■■■■■ - ■■ K1**
15.71	45	235	1.20	91	32	230	0.86	90	6.4	215	0.18	79	**2KJ3602 - ■■■■■ - ■■ J1**
14.00	50	235	1.40	91	36	230	0.97	91	7.1	215	0.20	80	**2KJ3602 - ■■■■■ - ■■ H1**
12.92	54	235	1.50	92	39	230	1.10	91	7.7	215	0.22	81	**2KJ3602 - ■■■■■ - ■■ G1**
11.31	62	235	1.70	92	44	235	1.20	91	8.8	220	0.25	82	**2KJ3602 - ■■■■■ - ■■ F1**
9.92	71	230	1.90	92	50	235	1.40	91	10.1	220	0.28	83	**2KJ3602 - ■■■■■ - ■■ E1**
9.00	78	220	2.00	92	56	235	1.50	92	11.1	220	0.31	83	**2KJ3602 - ■■■■■ - ■■ D1**
8.47	83	215	2.10	92	59	235	1.60	92	11.8	220	0.33	84	**2KJ3602 - ■■■■■ - ■■ C1**
7.47	94	205	2.30	92	67	230	1.80	92	13.4	220	0.37	85	**2KJ3602 - ■■■■■ - ■■ B1**
6.48	108	198	2.50	92	77	220	2.00	92	15.4	225	0.42	86	**2KJ3602 - ■■■■■ - ■■ A1**

© Siemens AG 2017

Selection and ordering data (continued)

	n_{mot} = 2 800 rpm				n_{mot} = 1 400 rpm				n_{mot} = 900 rpm				
i	n_2	T_{2N}	P_{mot}	η	n_2	T_{2N}	P_{mot}	η	n_2	T_{2N}	P_{mot}	η	**Article No.**
-	rpm	Nm	kW	%	rpm	Nm	kW	%	rpm	Nm	kW	%	
C.49													
299.00	9.4	355	0.48	73	4.7	350	0.26	67	3.0	345	0.18	61	**2KJ3603 - ■■■■■ - ■■ N2**
265.20	10.6	355	0.54	74	5.3	350	0.29	69	3.4	350	0.20	63	**2KJ3603 - ■■■■■ - ■■ M2**
230.10	12.2	355	0.62	74	6.1	350	0.32	70	3.9	350	0.22	65	**2KJ3603 - ■■■■■ - ■■ L2**
209.18	13.4	355	0.68	74	6.7	355	0.35	71	4.3	350	0.24	66	**2KJ3603 - ■■■■■ - ■■ K2**
179.40	15.6	355	0.79	74	7.8	355	0.40	72	5.0	350	0.27	68	**2KJ3603 - ■■■■■ - ■■ J2**
163.09	17.2	340	0.84	74	8.6	355	0.44	73	5.5	350	0.30	69	**2KJ3603 - ■■■■■ - ■■ H2**
143.00	19.6	315	0.89	74	9.8	355	0.50	73	6.3	355	0.33	70	**2KJ3603 - ■■■■■ - ■■ G2**
127.64	22	300	0.95	73	11.0	355	0.56	73	7.1	355	0.37	71	**2KJ3603 - ■■■■■ - ■■ F2**
113.75	25	285	1.00	73	12.3	355	0.62	74	7.9	355	0.41	72	**2KJ3603 - ■■■■■ - ■■ E2**
105.00	27	275	1.10	73	13.3	350	0.66	74	8.6	355	0.44	72	**2KJ3603 - ■■■■■ - ■■ D2**
91.93	30	260	1.10	73	15.2	330	0.72	74	9.8	355	0.50	73	**2KJ3603 - ■■■■■ - ■■ C2**
80.60	35	250	1.30	73	17.4	315	0.78	74	11.2	355	0.57	74	**2KJ3603 - ■■■■■ - ■■ B2**
73.12	38	240	1.30	73	19.1	300	0.82	74	12.3	345	0.61	74	**2KJ3603 - ■■■■■ - ■■ A2**
68.82	41	230	1.40	73	20	295	0.84	74	13.1	340	0.63	74	**2KJ3603 - ■■■■■ - ■■ X1**
60.67	46	220	1.50	73	23	280	0.92	74	14.8	320	0.68	74	**2KJ3603 - ■■■■■ - ■■ W1**
52.65	53	210	1.60	73	27	265	1.00	74	17.1	305	0.74	74	**2KJ3603 - ■■■■■ - ■■ V1**
49.87	56	310	2.10	90	28	310	1.00	89	18	305	0.66	87	**2KJ3603 - ■■■■■ - ■■ U1**
43.27	65	340	2.60	90	32	340	1.30	89	21	335	0.85	88	**2KJ3603 - ■■■■■ - ■■ T1**
39.33	71	335	2.80	89	36	395	1.70	89	23	395	1.10	88	**2KJ3603 - ■■■■■ - ■■ S1**
33.73	83	315	3.10	89	42	365	1.80	90	27	365	1.20	89	**2KJ3603 - ■■■■■ - ■■ R1**
30.67	91	300	3.20	89	46	380	2.10	89	29	400	1.40	89	**2KJ3603 - ■■■■■ - ■■ Q1**
26.89	104	285	3.50	89	52	360	2.20	90	33	400	1.50	89	**2KJ3603 - ■■■■■ - ■■ P1**
24.00	117	275	3.80	89	58	345	2.40	90	38	400	1.80	90	**2KJ3603 - ■■■■■ - ■■ N1**
21.39	131	260	4.1*	89	65	330	2.50	90	42	385	1.90	90	**2KJ3603 - ■■■■■ - ■■ M1**
19.74	142	255	4.3*	89	71	320	2.70	90	46	370	2.00	90	**2KJ3603 - ■■■■■ - ■■ L1**
17.29	162	240	4.6*	89	81	305	2.90	90	52	355	2.20	90	**2KJ3603 - ■■■■■ - ■■ K1**
15.16	185	230	5.1*	89	92	290	3.20	90	59	335	2.30	90	**2KJ3603 - ■■■■■ - ■■ J1**
13.75	204	220	5.4*	89	102	280	3.40	90	65	325	2.50	90	**2KJ3603 - ■■■■■ - ■■ H1**
12.94	216	210	5.3*	89	108	275	3.50	90	70	315	2.60	90	**2KJ3603 - ■■■■■ - ■■ G1**
11.41	245	185	5.4*	89	123	260	3.80	90	79	305	2.80	90	**2KJ3603 - ■■■■■ - ■■ F1**
9.90	283	161	5.4*	89	141	250	4.1*	89	91	290	3.10	90	**2KJ3603 - ■■■■■ - ■■ E1**
9.00	311	185	6.6*	91	156	260	4.6*	92	100	260	3.00	92	**2KJ3603 - ■■■■■ - ■■ D1**
8.47	331	174	6.6*	91	165	260	4.9*	92	106	260	3.20	92	**2KJ3603 - ■■■■■ - ■■ C1**
7.47	375	153	6.6*	91	187	250	5.3*	92	120	260	3.60	92	**2KJ3603 - ■■■■■ - ■■ B1**
6.48	432	133	6.6*	91	216	235	5.8*	92	139	260	4.1*	92	**2KJ3603 - ■■■■■ - ■■ A1**

* $P_{mot\ max}$ = 4 kW

© Siemens AG 2017

Selection and ordering data (continued)

	n_{mot} = 700 rpm				n_{mot} = 500 rpm				n_{mot} = 100 rpm				
i	n_2	T_{2N}	P_{mot}	η	n_2	T_{2N}	P_{mot}	η	n_2	T_{2N}	P_{mot}	η	**Article No.**
-	rpm	Nm	kW	%	rpm	Nm	kW	%	rpm	Nm	kW	%	
C.49													
299.00	2.3	340	0.14	58	1.7	315	0.10	54	0.33	260	<0.06	45	**2KJ3603 - ■■■■■ - ■■ N2**
265.20	2.6	340	0.16	60	1.9	315	0.11	55	0.38	255	<0.06	45	**2KJ3603 - ■■■■■ - ■■ M2**
230.10	3.0	345	0.18	61	2.2	320	0.13	57	0.43	255	<0.06	45	**2KJ3603 - ■■■■■ - ■■ L2**
209.18	3.3	345	0.19	63	2.4	320	0.14	58	0.48	255	<0.06	45	**2KJ3603 - ■■■■■ - ■■ K2**
179.40	3.9	350	0.22	65	2.8	330	0.16	60	0.56	255	<0.06	46	**2KJ3603 - ■■■■■ - ■■ J2**
163.09	4.3	350	0.24	66	3.1	330	0.18	61	0.61	255	<0.06	46	**2KJ3603 - ■■■■■ - ■■ H2**
143.00	4.9	350	0.27	68	3.5	340	0.20	63	0.70	255	<0.06	47	**2KJ3603 - ■■■■■ - ■■ G2**
127.64	5.5	350	0.30	69	3.9	350	0.22	65	0.78	260	<0.06	47	**2KJ3603 - ■■■■■ - ■■ F2**
113.75	6.2	355	0.33	70	4.4	350	0.25	66	0.88	260	<0.06	48	**2KJ3603 - ■■■■■ - ■■ E2**
105.00	6.7	355	0.35	71	4.8	350	0.26	67	0.95	265	<0.06	49	**2KJ3603 - ■■■■■ - ■■ D2**
91.93	7.6	355	0.39	72	5.4	350	0.29	69	1.1	270	0.06	50	**2KJ3603 - ■■■■■ - ■■ C2**
80.60	8.7	355	0.45	73	6.2	355	0.33	70	1.2	275	0.07	51	**2KJ3603 - ■■■■■ - ■■ B2**
73.12	9.6	355	0.49	73	6.8	355	0.36	71	1.4	280	0.08	52	**2KJ3603 - ■■■■■ - ■■ A2**
68.82	10.2	355	0.52	73	7.3	355	0.38	72	1.5	280	0.08	52	**2KJ3603 - ■■■■■ - ■■ X1**
60.67	11.5	350	0.57	74	8.2	355	0.42	73	1.6	285	0.09	54	**2KJ3603 - ■■■■■ - ■■ W1**
52.65	13.3	330	0.63	74	9.5	355	0.48	73	1.9	295	0.11	55	**2KJ3603 - ■■■■■ - ■■ V1**
49.87	14.0	295	0.51	86	10.0	285	0.37	83	2.0	245	0.07	71	**2KJ3603 - ■■■■■ - ■■ U1**
43.27	16.2	330	0.65	87	11.6	320	0.47	84	2.3	275	0.09	71	**2KJ3603 - ■■■■■ - ■■ T1**
39.33	17.8	390	0.83	87	12.7	375	0.60	85	2.5	320	0.12	72	**2KJ3603 - ■■■■■ - ■■ S1**
33.73	21	360	0.91	88	14.8	355	0.64	86	3.0	300	0.13	73	**2KJ3603 - ■■■■■ - ■■ R1**
30.67	23	395	1.10	88	16.3	385	0.77	87	3.3	330	0.16	73	**2KJ3603 - ■■■■■ - ■■ Q1**
26.89	26	395	1.20	89	18.6	390	0.87	88	3.7	330	0.17	74	**2KJ3603 - ■■■■■ - ■■ P1**
24.00	29	395	1.40	89	21	390	0.99	88	4.2	335	0.20	75	**2KJ3603 - ■■■■■ - ■■ N1**
21.39	33	395	1.50	89	23	395	1.10	89	4.7	340	0.22	76	**2KJ3603 - ■■■■■ - ■■ M1**
19.74	35	400	1.60	90	25	395	1.20	89	5.1	340	0.24	77	**2KJ3603 - ■■■■■ - ■■ L1**
17.29	40	385	1.80	90	29	395	1.30	89	5.8	345	0.27	78	**2KJ3603 - ■■■■■ - ■■ K1**
15.16	46	365	2.00	90	33	390	1.50	90	6.6	345	0.30	79	**2KJ3603 - ■■■■■ - ■■ J1**
13.75	51	355	2.10	90	36	390	1.60	90	7.3	345	0.33	80	**2KJ3603 - ■■■■■ - ■■ H1**
12.94	54	345	2.20	90	39	385	1.80	90	7.7	350	0.35	80	**2KJ3603 - ■■■■■ - ■■ G1**
11.41	61	330	2.40	90	44	370	1.90	90	8.8	355	0.40	82	**2KJ3603 - ■■■■■ - ■■ F1**
9.90	71	315	2.60	90	51	350	2.10	90	10.1	360	0.46	83	**2KJ3603 - ■■■■■ - ■■ E1**
9.00	78	260	2.30	92	56	255	1.70	91	11.1	235	0.33	84	**2KJ3603 - ■■■■■ - ■■ D1**
8.47	83	260	2.50	92	59	260	1.80	91	11.8	240	0.35	84	**2KJ3603 - ■■■■■ - ■■ C1**
7.47	94	260	2.80	92	67	260	2.00	92	13.4	240	0.40	85	**2KJ3603 - ■■■■■ - ■■ B1**
6.48	108	260	3.20	92	77	260	2.30	92	15.4	245	0.46	87	**2KJ3603 - ■■■■■ - ■■ A1**

© Siemens AG 2017

Selection and ordering data (continued)

	n_{mot} = 2 800 rpm				n_{mot} = 1 400 rpm				n_{mot} = 900 rpm				
i	n_2	T_{2N}	P_{mot}	η	n_2	T_{2N}	P_{mot}	η	n_2	T_{2N}	P_{mot}	η	**Article No.**
-	rpm	Nm	kW	%	rpm	Nm	kW	%	rpm	Nm	kW	%	
C.69													
360.00	7.8	575	0.65	73	3.9	680	0.40	69	2.5	645	0.27	63	**2KJ3604 - ■■■■■ - ■■ M2**
319.80	8.8	570	0.72	73	4.4	680	0.45	70	2.8	655	0.30	65	**2KJ3604 - ■■■■■ - ■■ L2**
280.80	10.0	560	0.81	73	5.0	680	0.50	71	3.2	660	0.33	66	**2KJ3604 - ■■■■■ - ■■ K2**
255.27	11.0	555	0.88	73	5.5	680	0.55	72	3.5	665	0.36	67	**2KJ3604 - ■■■■■ - ■■ J2**
218.40	12.8	530	0.97	74	6.4	655	0.60	73	4.1	675	0.42	70	**2KJ3604 - ■■■■■ - ■■ H2**
198.55	14.1	510	1.00	73	7.1	635	0.65	73	4.5	680	0.46	70	**2KJ3604 - ■■■■■ - ■■ G2**
175.50	16.0	485	1.10	73	8.0	610	0.70	74	5.1	685	0.51	72	**2KJ3604 - ■■■■■ - ■■ F2**
159.55	17.5	470	1.20	73	8.8	590	0.74	74	5.6	670	0.54	72	**2KJ3604 - ■■■■■ - ■■ E2**
139.75	20	440	1.30	73	10.0	550	0.79	74	6.4	630	0.58	73	**2KJ3604 - ■■■■■ - ■■ D2**
129.00	22	425	1.30	74	10.9	535	0.83	74	7.0	610	0.61	73	**2KJ3604 - ■■■■■ - ■■ C2**
114.21	25	405	1.40	73	12.3	510	0.89	74	7.9	585	0.66	74	**2KJ3604 - ■■■■■ - ■■ B2**
102.50	27	555	1.80	87	13.7	645	1.10	86	8.8	625	0.69	84	**2KJ3604 - ■■■■■ - ■■ A2**
90.00	31	555	2.10	87	15.6	665	1.30	86	10.0	650	0.81	84	**2KJ3604 - ■■■■■ - ■■ X1**
81.82	34	545	2.20	87	17.1	680	1.40	87	11.0	775	1.10	85	**2KJ3604 - ■■■■■ - ■■ W1**
70.00	40	515	2.50	87	20	650	1.60	87	12.9	680	1.10	86	**2KJ3604 - ■■■■■ - ■■ V1**
63.64	44	500	2.70	87	22	630	1.70	87	14.1	720	1.20	86	**2KJ3604 - ■■■■■ - ■■ U1**
56.25	50	480	2.90	87	25	605	1.80	87	16.0	695	1.30	87	**2KJ3604 - ■■■■■ - ■■ T1**
51.14	55	455	3.00	87	27	575	1.90	87	17.6	660	1.40	87	**2KJ3604 - ■■■■■ - ■■ S1**
44.79	63	430	3.30	87	31	545	2.00	87	20	630	1.50	87	**2KJ3604 - ■■■■■ - ■■ R1**
41.35	68	420	3.40	87	34	525	2.20	87	22	610	1.60	87	**2KJ3604 - ■■■■■ - ■■ Q1**
36.61	76	400	3.70	87	38	505	2.30	87	25	580	1.80	87	**2KJ3604 - ■■■■■ - ■■ P1**
30.00	93	435	4.70	90	47	545	3.00	90	30	560	2.00	90	**2KJ3604 - ■■■■■ - ■■ N1**
26.28	107	410	5.10	90	53	520	3.20	90	34	550	2.20	90	**2KJ3604 - ■■■■■ - ■■ M1**
24.26	115	400	5.30	90	58	500	3.40	90	37	545	2.30	91	**2KJ3604 - ■■■■■ - ■■ L1**
21.48	130	380	5.8*	90	65	480	3.60	90	42	540	2.60	91	**2KJ3604 - ■■■■■ - ■■ K1**
17.88	157	355	6.5*	90	78	450	4.10	90	50	520	3.00	91	**2KJ3604 - ■■■■■ - ■■ J1**
15.88	176	365	7.3*	92	88	365	3.70	92	57	365	2.40	92	**2KJ3604 - ■■■■■ - ■■ H1**
14.06	199	360	8.2*	92	100	360	4.10	92	64	360	2.60	92	**2KJ3604 - ■■■■■ - ■■ G1**
11.70	239	345	9.5*	92	120	365	5.00	92	77	365	3.20	92	**2KJ3604 - ■■■■■ - ■■ F1**
11.01	254	325	9.5*	92	127	365	5.40	92	82	365	3.50	92	**2KJ3604 - ■■■■■ - ■■ E1**
9.87	284	290	9.5*	92	142	365	6.0*	92	91	365	3.80	92	**2KJ3604 - ■■■■■ - ■■ D1**
8.40	333	250	9.6*	91	167	370	7.1*	92	107	370	4.50	92	**2KJ3604 - ■■■■■ - ■■ C1**
7.20	389	210	9.6*	91	194	365	8.2*	92	125	365	5.30	92	**2KJ3604 - ■■■■■ - ■■ B1**
6.20	452	184	9.6*	91	226	365	9.4*	92	145	365	6.1*	92	**2KJ3604 - ■■■■■ - ■■ A1**

* $P_{mot\ max}$ = 5.5 kW

© Siemens AG 2017

Selection and ordering data (continued)

	n_{mot} = 700 rpm				n_{mot} = 500 rpm				n_{mot} = 100 rpm				
i	n_2	T_{2N}	P_{mot}	η	n_2	T_{2N}	P_{mot}	η	n_2	T_{2N}	P_{mot}	η	**Article No.**
-	rpm	Nm	kW	%	rpm	Nm	kW	%	rpm	Nm	kW	%	
C.69													
360.00	1.9	610	0.20	60	1.4	570	0.15	55	0.28	460	<0.06	45	**2KJ3604 - ■■■■■ - ■■ M2**
319.80	2.2	620	0.23	61	1.6	575	0.17	57	0.31	460	<0.06	45	**2KJ3604 - ■■■■■ - ■■ L2**
280.80	2.5	625	0.26	63	1.8	580	0.19	58	0.36	455	<0.06	45	**2KJ3604 - ■■■■■ - ■■ K2**
255.27	2.7	635	0.28	64	2.0	590	0.21	59	0.39	455	<0.06	45	**2KJ3604 - ■■■■■ - ■■ J2**
218.40	3.2	645	0.33	66	2.3	605	0.24	62	0.46	460	<0.06	46	**2KJ3604 - ■■■■■ - ■■ H2**
198.55	3.5	650	0.35	68	2.5	610	0.25	63	0.50	455	<0.06	47	**2KJ3604 - ■■■■■ - ■■ G2**
175.50	4.0	665	0.40	69	2.8	625	0.28	65	0.57	460	0.06	48	**2KJ3604 - ■■■■■ - ■■ F2**
159.55	4.4	670	0.44	70	3.1	635	0.31	66	0.63	465	0.06	48	**2KJ3604 - ■■■■■ - ■■ E2**
139.75	5.0	670	0.49	72	3.6	650	0.36	68	0.72	475	0.07	49	**2KJ3604 - ■■■■■ - ■■ D2**
129.00	5.4	655	0.51	72	3.9	660	0.39	69	0.78	480	0.08	50	**2KJ3604 - ■■■■■ - ■■ C2**
114.21	6.1	630	0.55	73	4.4	670	0.44	71	0.88	490	0.09	51	**2KJ3604 - ■■■■■ - ■■ B2**
102.50	6.8	610	0.54	81	4.9	585	0.39	78	0.98	500	0.08	67	**2KJ3604 - ■■■■■ - ■■ A2**
90.00	7.8	635	0.63	82	5.6	610	0.45	79	1.1	515	0.09	67	**2KJ3604 - ■■■■■ - ■■ X1**
81.82	8.6	800	0.87	84	6.1	775	0.62	80	1.2	650	0.12	68	**2KJ3604 - ■■■■■ - ■■ W1**
70.00	10.0	665	0.83	84	7.1	645	0.59	82	1.4	540	0.12	68	**2KJ3604 - ■■■■■ - ■■ V1**
63.64	11.0	775	1.00	85	7.9	830	0.83	83	1.6	695	0.17	69	**2KJ3604 - ■■■■■ - ■■ U1**
56.25	12.4	750	1.10	86	8.9	810	0.90	84	1.8	675	0.18	70	**2KJ3604 - ■■■■■ - ■■ T1**
51.14	13.7	715	1.20	86	9.8	785	0.95	85	2.0	750	0.22	71	**2KJ3604 - ■■■■■ - ■■ S1**
44.79	15.6	680	1.30	87	11.2	750	1.00	86	2.2	760	0.24	72	**2KJ3604 - ■■■■■ - ■■ R1**
41.35	16.9	660	1.30	87	12.1	730	1.10	86	2.4	765	0.27	72	**2KJ3604 - ■■■■■ - ■■ Q1**
36.61	19.1	630	1.50	87	13.7	700	1.20	87	2.7	770	0.30	73	**2KJ3604 - ■■■■■ - ■■ P1**
30.00	23	560	1.50	90	16.7	555	1.10	89	3.3	480	0.22	77	**2KJ3604 - ■■■■■ - ■■ N1**
26.28	27	550	1.70	90	19	545	1.20	90	3.8	480	0.24	78	**2KJ3604 - ■■■■■ - ■■ M1**
24.26	29	545	1.80	90	21	540	1.30	90	4.1	475	0.26	79	**2KJ3604 - ■■■■■ - ■■ L1**
21.48	33	540	2.10	91	23	540	1.40	90	4.7	475	0.30	80	**2KJ3604 - ■■■■■ - ■■ K1**
17.88	39	545	2.50	91	28	545	1.80	91	5.6	490	0.35	82	**2KJ3604 - ■■■■■ - ■■ J1**
15.88	44	365	1.80	92	31	360	1.30	91	6.3	330	0.26	83	**2KJ3604 - ■■■■■ - ■■ H1**
14.06	50	360	2.10	92	36	355	1.50	92	7.1	330	0.29	84	**2KJ3604 - ■■■■■ - ■■ G1**
11.70	60	365	2.50	92	43	365	1.80	92	8.5	340	0.36	85	**2KJ3604 - ■■■■■ - ■■ F1**
11.01	64	365	2.70	92	45	365	1.90	92	9.1	340	0.38	86	**2KJ3604 - ■■■■■ - ■■ E1**
9.87	71	365	3.00	92	51	365	2.10	92	10.1	345	0.43	86	**2KJ3604 - ■■■■■ - ■■ D1**
8.40	83	370	3.50	92	60	370	2.50	92	11.9	350	0.50	87	**2KJ3604 - ■■■■■ - ■■ C1**
7.20	97	365	4.10	92	69	365	2.90	92	13.9	350	0.59	88	**2KJ3604 - ■■■■■ - ■■ B1**
6.20	113	365	4.70	92	81	365	3.40	92	16.1	355	0.67	89	**2KJ3604 - ■■■■■ - ■■ A1**

© Siemens AG 2017

Selection and ordering data (continued)

	n_{mot} = 2 800 rpm				n_{mot} = 1 400 rpm				n_{mot} = 900 rpm				
i	n_2	T_{2N}	P_{mot}	η	n_2	T_{2N}	P_{mot}	η	n_2	T_{2N}	P_{mot}	η	**Article No.**
-	rpm	Nm	kW	%	rpm	Nm	kW	%	rpm	Nm	kW	%	
C.89													
363.00	7.7	1 180	1.30	73	3.9	1 460	0.83	72	2.5	1 430	0.55	68	**2KJ3605 - ■■■■■ - ■■ N2**
329.73	8.5	1 180	1.40	73	4.2	1 460	0.89	72	2.7	1 440	0.59	69	**2KJ3605 - ■■■■■ - ■■ M2**
295.75	9.5	1 170	1.60	73	4.7	1 460	0.99	73	3.0	1 460	0.66	70	**2KJ3605 - ■■■■■ - ■■ L2**
265.91	10.5	1 170	1.80	73	5.3	1 460	1.10	73	3.4	1 470	0.74	71	**2KJ3605 - ■■■■■ - ■■ K2**
240.50	11.6	1 160	1.90	73	5.8	1 450	1.20	73	3.7	1 480	0.80	72	**2KJ3605 - ■■■■■ - ■■ J2**
222.00	12.6	1 120	2.00	73	6.3	1 410	1.30	73	4.1	1 490	0.89	72	**2KJ3605 - ■■■■■ - ■■ H2**
203.36	13.8	1 090	2.20	73	6.9	1 370	1.40	73	4.4	1 500	0.95	73	**2KJ3605 - ■■■■■ - ■■ G2**
170.62	16.4	1 030	2.40	73	8.2	1 300	1.50	73	5.3	1 490	1.10	73	**2KJ3605 - ■■■■■ - ■■ F2**
160.59	17.4	1 010	2.50	73	8.7	1 270	1.60	73	5.6	1 460	1.20	74	**2KJ3605 - ■■■■■ - ■■ E2**
147.33	19	980	2.70	73	9.5	1 230	1.70	74	6.1	1 430	1.20	74	**2KJ3605 - ■■■■■ - ■■ D2**
128.70	22	915	2.90	73	10.9	1 150	1.80	73	7.0	1 340	1.30	74	**2KJ3605 - ■■■■■ - ■■ C2**
115.23	24	875	3.00	73	12.1	1 100	1.90	74	7.8	1 280	1.40	74	**2KJ3605 - ■■■■■ - ■■ B2**
100.75	28	830	3.30	73	13.9	1 040	2.10	74	8.9	1 210	1.50	74	**2KJ3605 - ■■■■■ - ■■ A2**
86.48	32	780	3.60	73	16.2	980	2.30	73	10.4	1 140	1.70	74	**2KJ3605 - ■■■■■ - ■■ X1**
76.44	37	740	4.00	73	18.3	935	2.40	73	11.8	1 080	1.80	74	**2KJ3605 - ■■■■■ - ■■ W1**
65.00	43	695	4.30	73	22	875	2.80	73	13.8	1 010	2.00	74	**2KJ3605 - ■■■■■ - ■■ V1**
55.61	50	1 150	6.70	90	25	1 450	4.20	91	16.2	1 550	2.90	90	**2KJ3605 - ■■■■■ - ■■ U1**
50.00	56	1 130	7.40	90	28	1 430	4.60	90	18.0	1 560	3.30	90	**2KJ3605 - ■■■■■ - ■■ T1**
45.22	62	1 100	7.90	90	31	1 380	5.00	91	19.9	1 560	3.60	90	**2KJ3605 - ■■■■■ - ■■ S1**
41.74	67	1 070	8.30	90	34	1 350	5.30	91	22	1 560	4.00	91	**2KJ3605 - ■■■■■ - ■■ R1**
38.24	73	1 040	8.80	90	37	1 310	5.60	91	24	1 520	4.20	91	**2KJ3605 - ■■■■■ - ■■ Q1**
32.08	87	985	10*	90	44	1 240	6.30	91	28	1 440	4.70	91	**2KJ3605 - ■■■■■ - ■■ P1**
30.20	93	950	10.3*	90	46	1 200	6.40	91	30	1 390	4.80	91	**2KJ3605 - ■■■■■ - ■■ N1**
27.70	101	920	10.8*	90	51	1 160	6.90	91	32	1 340	5.00	91	**2KJ3605 - ■■■■■ - ■■ M1**
25.03	112	1 080	13.7*	93	56	1 090	6.90	93	36	1 090	4.50	93	**2KJ3605 - ■■■■■ - ■■ L1**
21.00	133	1 000	15.1*	93	67	1 080	8.20	93	43	1 070	5.20	93	**2KJ3605 - ■■■■■ - ■■ K1**
19.76	142	980	15.8*	93	71	1 120	9.00	93	46	1 120	5.80	93	**2KJ3605 - ■■■■■ - ■■ J1**
18.13	154	950	16.6*	93	77	1 120	9.7*	93	50	1 120	6.30	93	**2KJ3605 - ■■■■■ - ■■ H1**
15.84	177	865	17.3*	93	88	1 140	11.3*	93	57	1 140	7.30	93	**2KJ3605 - ■■■■■ - ■■ G1**
14.18	197	770	17.3*	92	99	1 090	12.2*	93	63	1 150	8.20	93	**2KJ3605 - ■■■■■ - ■■ F1**
12.40	226	675	17.3*	93	113	1 040	13.3*	93	73	1 140	9.5*	93	**2KJ3605 - ■■■■■ - ■■ E1**
10.64	263	580	17.3*	92	132	985	14.7*	93	85	1 140	10.9*	93	**2KJ3605 - ■■■■■ - ■■ D1**
9.41	298	510	17.4*	92	149	940	15.9*	93	96	1 090	11.8*	93	**2KJ3605 - ■■■■■ - ■■ C1**
8.00	350	435	17.4*	92	175	870	17.3*	93	112	1 030	13.1*	93	**2KJ3605 - ■■■■■ - ■■ B1**
6.86	408	370	17.4*	92	204	745	17.3*	93	131	980	14.5*	93	**2KJ3605 - ■■■■■ - ■■ A1**

* $P_{mot\ max}$ = 9.2 kW

© Siemens AG 2017

Selection and ordering data (continued)

	n_{mot} = 700 rpm				n_{mot} = 500 rpm				n_{mot} = 100 rpm				
i	n_2	T_{2N}	P_{mot}	η	n_2	T_{2N}	P_{mot}	η	n_2	T_{2N}	P_{mot}	η	**Article No.**
-	rpm	Nm	kW	%	rpm	Nm	kW	%	rpm	Nm	kW	%	
C.89													
363.00	1.9	1 360	0.42	64	1.4	1 260	0.31	60	0.28	955	0.06	45	**2KJ3605 - ■■■■■ - ■■ N2**
329.73	2.1	1 380	0.46	66	1.5	1 280	0.33	61	0.30	960	0.07	45	**2KJ3605 - ■■■■■ - ■■ M2**
295.75	2.4	1 400	0.53	67	1.7	1 310	0.37	62	0.34	965	0.08	45	**2KJ3605 - ■■■■■ - ■■ L2**
265.91	2.6	1 420	0.57	68	1.9	1 330	0.42	64	0.38	975	0.08	46	**2KJ3605 - ■■■■■ - ■■ K2**
240.50	2.9	1 440	0.63	70	2.1	1 360	0.46	66	0.42	985	0.09	47	**2KJ3605 - ■■■■■ - ■■ J2**
222.00	3.2	1 450	0.69	70	2.3	1 380	0.50	67	0.45	995	0.10	47	**2KJ3605 - ■■■■■ - ■■ H2**
203.36	3.4	1 470	0.74	71	2.5	1 400	0.54	68	0.49	1 000	0.11	48	**2KJ3605 - ■■■■■ - ■■ G2**
170.62	4.1	1 490	0.89	72	2.9	1 440	0.63	70	0.59	1 030	0.13	50	**2KJ3605 - ■■■■■ - ■■ F2**
160.59	4.4	1 490	0.95	73	3.1	1 450	0.67	71	0.62	1 040	0.14	50	**2KJ3605 - ■■■■■ - ■■ E2**
147.33	4.8	1 500	1.00	73	3.4	1 460	0.73	71	0.68	1 060	0.15	51	**2KJ3605 - ■■■■■ - ■■ D2**
128.70	5.4	1 450	1.10	74	3.9	1 480	0.84	72	0.78	1 090	0.17	53	**2KJ3605 - ■■■■■ - ■■ C2**
115.23	6.1	1 390	1.20	74	4.3	1 490	0.92	73	0.87	1 110	0.19	54	**2KJ3605 - ■■■■■ - ■■ B2**
100.75	6.9	1 310	1.30	74	5.0	1 460	1.00	74	0.99	1 150	0.21	56	**2KJ3605 - ■■■■■ - ■■ A2**
86.48	8.1	1 230	1.40	74	5.8	1 380	1.10	74	1.2	1 190	0.26	58	**2KJ3605 - ■■■■■ - ■■ X1**
76.44	9.2	1 170	1.50	74	6.5	1 310	1.20	74	1.3	1 220	0.28	60	**2KJ3605 - ■■■■■ - ■■ W1**
65.00	10.8	1 100	1.70	74	7.7	1 230	1.30	74	1.5	1 270	0.32	62	**2KJ3605 - ■■■■■ - ■■ V1**
55.61	12.6	1 540	2.30	90	9.0	1 510	1.60	88	1.8	1 290	0.33	75	**2KJ3605 - ■■■■■ - ■■ U1**
50.00	14.0	1 540	2.50	90	10.0	1 530	1.80	88	2.0	1 430	0.40	75	**2KJ3605 - ■■■■■ - ■■ T1**
45.22	15.5	1 550	2.80	90	11.1	1 530	2.00	89	2.2	1 430	0.43	76	**2KJ3605 - ■■■■■ - ■■ S1**
41.74	16.8	1 550	3.00	90	12.0	1 540	2.20	89	2.4	1 450	0.48	77	**2KJ3605 - ■■■■■ - ■■ R1**
38.24	18.3	1 560	3.30	90	13.1	1 540	2.40	90	2.6	1 450	0.51	77	**2KJ3605 - ■■■■■ - ■■ Q1**
32.08	22	1 560	4.00	91	15.6	1 550	2.80	90	3.1	1 390	0.57	79	**2KJ3605 - ■■■■■ - ■■ P1**
30.20	23	1 510	4.00	91	16.6	1 550	3.00	90	3.3	1 460	0.64	79	**2KJ3605 - ■■■■■ - ■■ N1**
27.70	25	1 460	4.20	91	18.1	1 560	3.30	91	3.6	1 470	0.69	80	**2KJ3605 - ■■■■■ - ■■ M1**
25.03	28	1 090	3.50	93	20	1 080	2.50	92	4.0	990	0.50	84	**2KJ3605 - ■■■■■ - ■■ L1**
21.00	33	1 070	4.00	93	24	1 070	2.90	92	4.8	985	0.59	85	**2KJ3605 - ■■■■■ - ■■ K1**
19.76	35	1 120	4.50	93	25	1 120	3.20	92	5.1	1 030	0.65	85	**2KJ3605 - ■■■■■ - ■■ J1**
18.13	39	1 110	4.90	93	28	1 110	3.50	92	5.5	1 030	0.70	85	**2KJ3605 - ■■■■■ - ■■ H1**
15.84	44	1 140	5.70	93	32	1 130	4.10	93	6.3	1 050	0.81	86	**2KJ3605 - ■■■■■ - ■■ G1**
14.18	49	1 150	6.40	93	35	1 140	4.50	93	7.1	1 070	0.92	87	**2KJ3605 - ■■■■■ - ■■ F1**
12.40	56	1 140	7.30	93	40	1 140	5.20	93	8.1	1 080	1.00	88	**2KJ3605 - ■■■■■ - ■■ E1**
10.64	66	1 150	8.50	93	47	1 140	6.10	93	9.4	1 090	1.20	88	**2KJ3605 - ■■■■■ - ■■ D1**
9.41	74	1 120	9.4*	93	53	1 120	6.70	93	10.6	1 070	1.30	89	**2KJ3605 - ■■■■■ - ■■ C1**
8.00	88	1 120	11.2*	93	62	1 130	7.90	93	12.5	1 090	1.60	90	**2KJ3605 - ■■■■■ - ■■ B1**
6.86	102	1 060	12.3*	93	73	1 110	9.20	93	14.6	1 090	1.80	91	**2KJ3605 - ■■■■■ - ■■ A1**

* $P_{mot\ max}$ = 9.2 kW

© Siemens AG 2017

Dimensional drawing overview

Information about dimensional drawings can be found in chapter Introduction on page 1/21.

Design	Size	Dimensional drawing on page
Foot-mounted design		
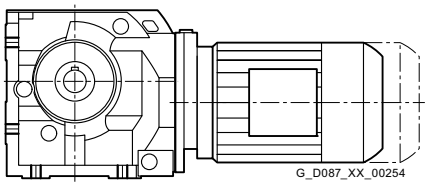 G_D087_XX_00254	C..29	6/42
	C..39	6/46
	C..49	6/50
	C..69	6/54
	C..89	6/58
Flange-mounted design		
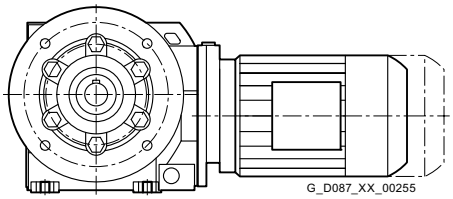 G_D087_XX_00255	C.F.29	6/43
	C.F.39	6/47
	C.F.49	6/51
	C.F.69	6/55
	C.F.89	6/59
Housing flange design		
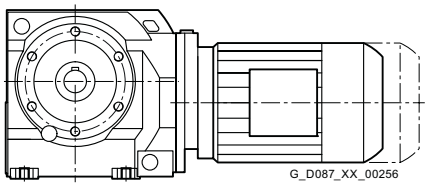 G_D087_XX_00256	C.Z.29	6/44
	C.Z.39	6/48
	C.Z.49	6/52
	C.Z.69	6/56
	C.Z.89	6/60
Shaft-mounted design		
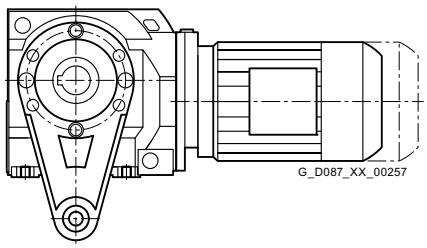 G_D087_XX_00257	CAD.29	6/45
	CAD.39	6/49
	CAD.49	6/53
	CAD.69	6/57
	CAD.89	6/61
Helical worm tandem geared motors		
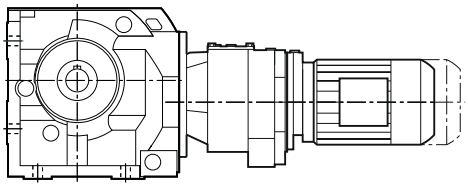	C.29-D/Z19 ... C.89-D/Z39	6/62

© Siemens AG 2017

Dimensional drawing overview (continued)

Design	Size	Dimensional drawing on page
Additional versions and options		
SIMOLOC assembly system		
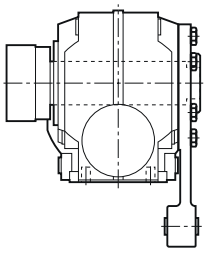	CADR.29 ... CADR.89	6/63
Protection covers		
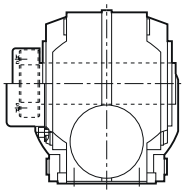	CA.29 ... CA.89 CA.S29 ... CA.S89 CADR29 ... CADR89	6/64
Inner contour of the flange design		
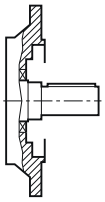	CF29 ... CF89 CAF.29 ... CAF.89	6/65

© Siemens AG 2017

C..29 gearbox in a foot-mounted design

C030, CA030, CAS030

C29

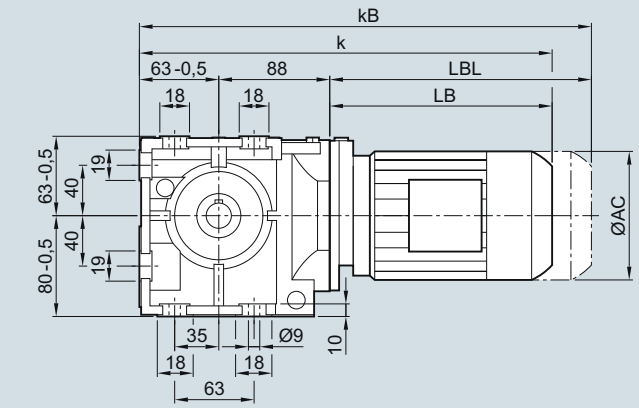

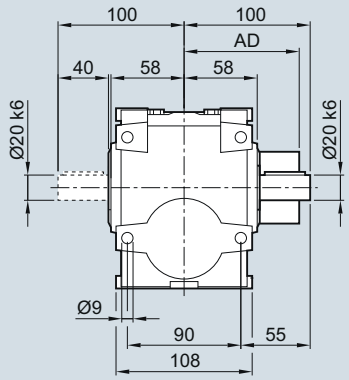

CA29

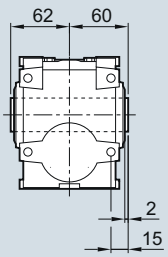

CAS29

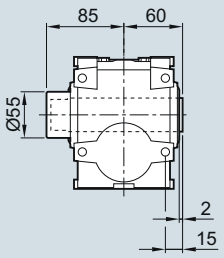

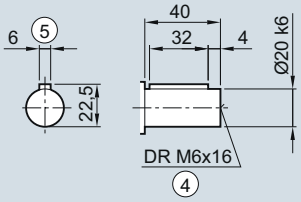

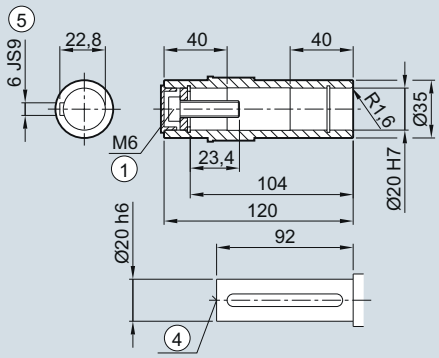

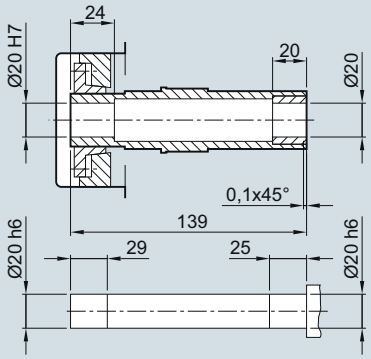

Motor	LA			LE			
	63	71	71Z	80	80Z	90	90Z
AC	117.8	138.8	138.8	156.3	156.3	173.8	173.8
AD[1)]	124.0	134.0	134.0	149.2	149.2	154.2	154.2
k	345.0	377.0	396.0	441.0	476.0	502.5	542.5
kB	389.5	432.0	451.0	501.0	536.0	572.5	612.5
LB	194.0	226.0	245.0	290.0	325.0	351.5	391.5
LBL	238.5	281.0	300.0	350.0	385.0	421.5	461.5

① ISO 4014 ④ DIN 332 ⑤ Feather key/keyway DIN 6885-1

1) AD depends on the motor options, for other dimensions see page 8/36.

© Siemens AG 2017

C.F.29 gearbox in a flange-mounted design

CF030, CAF030, CAFS030

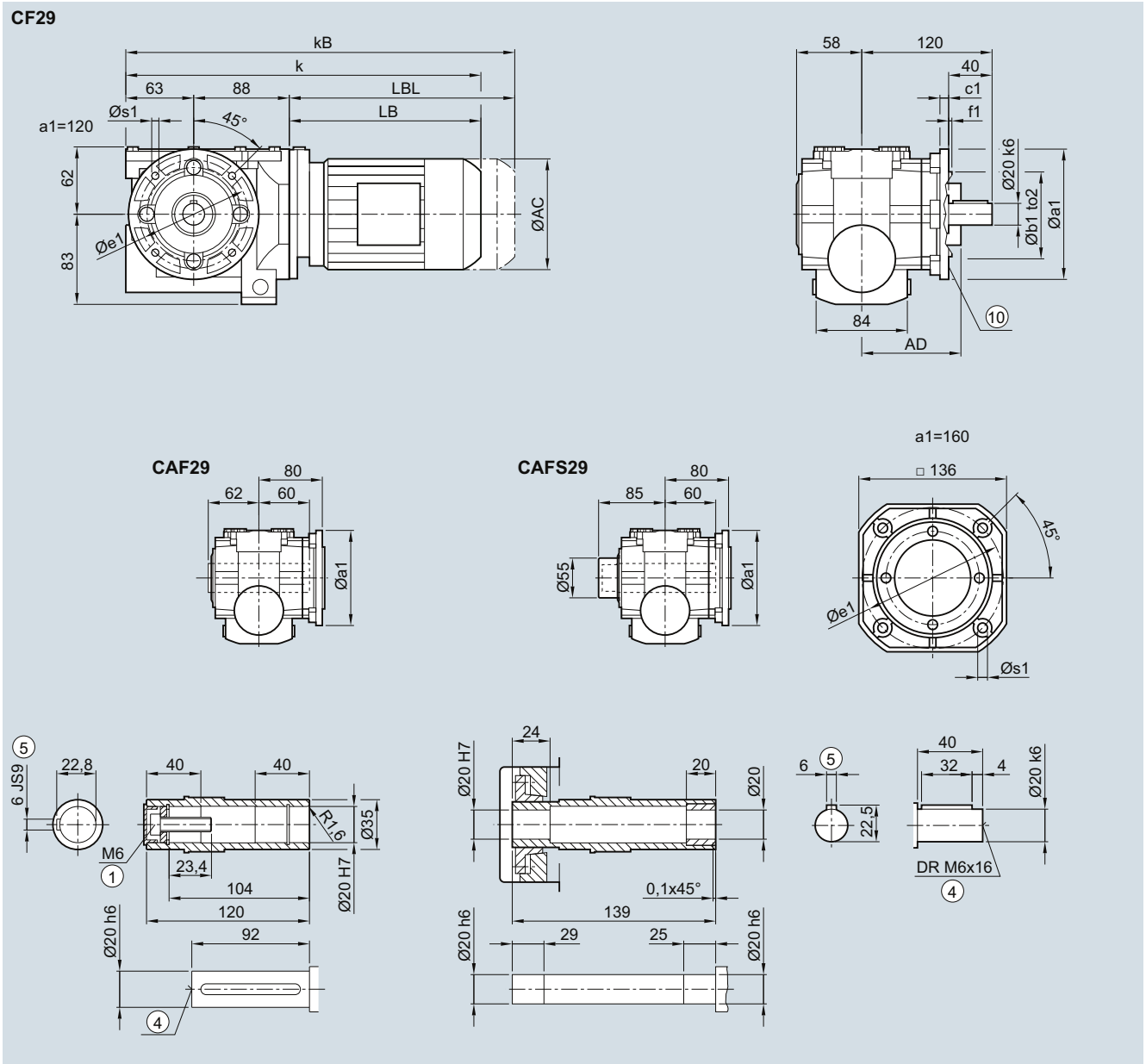

Flange	a1	b1	c1	f1	e1	s1	to2
	120	80	8	3.0	100	6.6	j6
	160	110	9	3.5	130	9.0	j6

Motor	LA 63	 71	 71Z	LE 80	 80Z	 90	 90Z
AC	117.8	138.8	138.8	156.3	156.3	173.8	173.8
AD[1)]	124.0	134.0	134.0	149.2	149.2	154.2	154.2
k	345.0	377.0	396.0	441.0	476.0	502.5	542.5
kB	389.5	432.0	451.0	501.0	536.0	572.5	612.5
LB	194.0	226.0	245.0	290.0	325.0	351.5	391.5
LBL	238.5	281.0	300.0	350.0	385.0	421.5	461.5

① ISO 4014 ④ DIN 332 ⑤ Feather key/keyway DIN 6885-1

[1)] AD depends on the motor options, for other dimensions see page 8/36.

⑩ For inner contour see page 6/65.

© Siemens AG 2017

C.Z.29 gearbox in a housing flange design

CZ030, CAZ030, CAZS030

CZ29

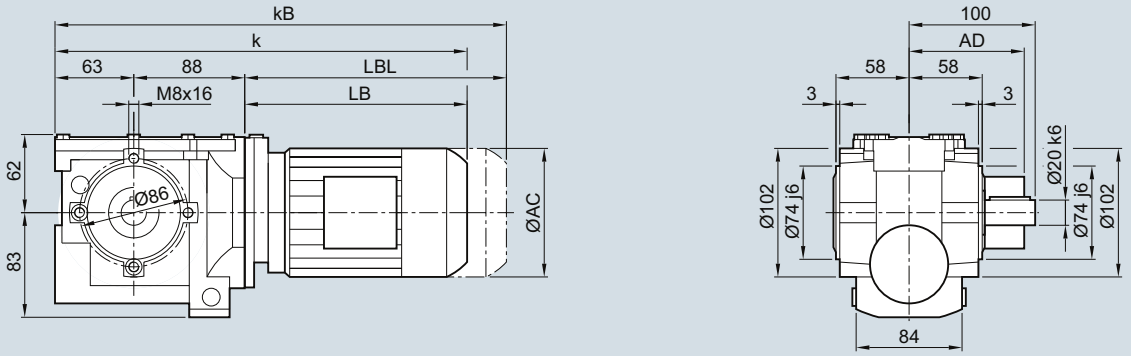

CAZ29

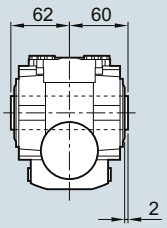

CAZS29

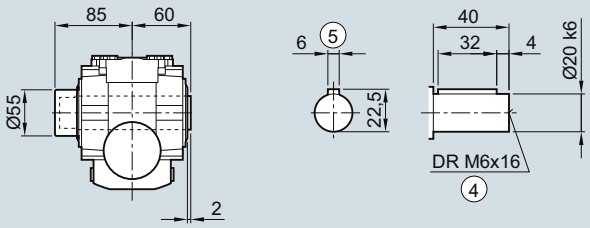

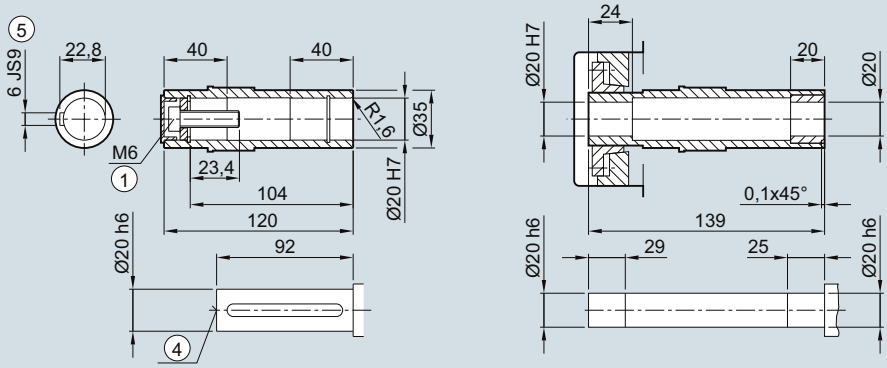

Motor	LA			LE			
	63	71	71Z	80	80Z	90	90Z
AC	117.8	138.8	138.8	156.3	156.3	173.8	173.8
AD[1)]	124.0	134.0	134.0	149.2	149.2	154.2	154.2
k	345.0	377.0	396.0	441.0	476.0	502.5	542.5
kB	389.5	432.0	451.0	501.0	536.0	572.5	612.5
LB	194.0	226.0	245.0	290.0	325.0	351.5	391.5
LBL	238.5	281.0	300.0	350.0	385.0	421.5	461.5

① ISO 4014 ④ DIN 332 ⑤ Feather key/keyway DIN 6885-1

1) AD depends on the motor options, for other dimensions see page 8/36.

© Siemens AG 2017

CAD.29 gearbox in a shaft-mounted design

CAD030, CADS030

CAD29

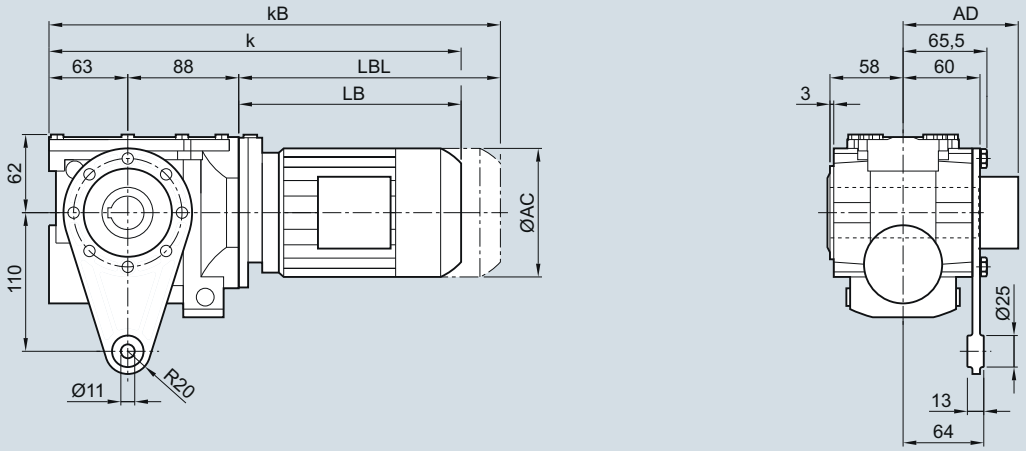

CAD29

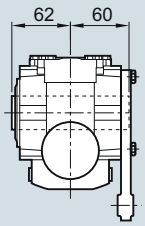

CADS29

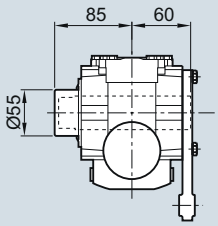

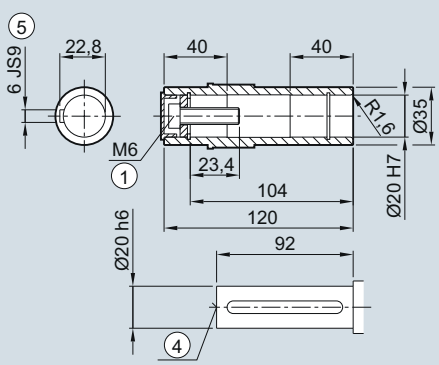

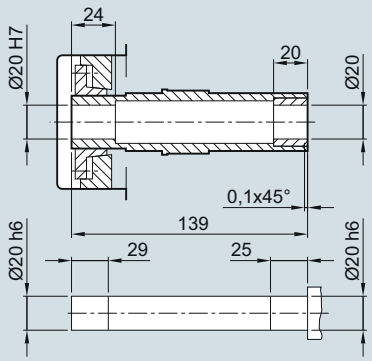

Motor	LA			LE			
	63	71	71Z	80	80Z	90	90Z
AC	117.8	138.8	138.8	156.3	156.3	173.8	173.8
AD[1)]	124.0	134.0	134.0	149.2	149.2	154.2	154.2
k	345.0	377.0	396.0	441.0	476.0	502.5	542.5
kB	389.5	432.0	451.0	501.0	536.0	572.5	612.5
LB	194.0	226.0	245.0	290.0	325.0	351.5	391.5
LBL	238.5	281.0	300.0	350.0	385.0	421.5	461.5

① ISO 4014 ④ DIN 332 ⑤ Feather key/keyway DIN 6885-1

1) AD depends on the motor options, for other dimensions see page 8/36.

© Siemens AG 2017

C..39 gearbox in a foot-mounted design

C030, CA030, CAS030

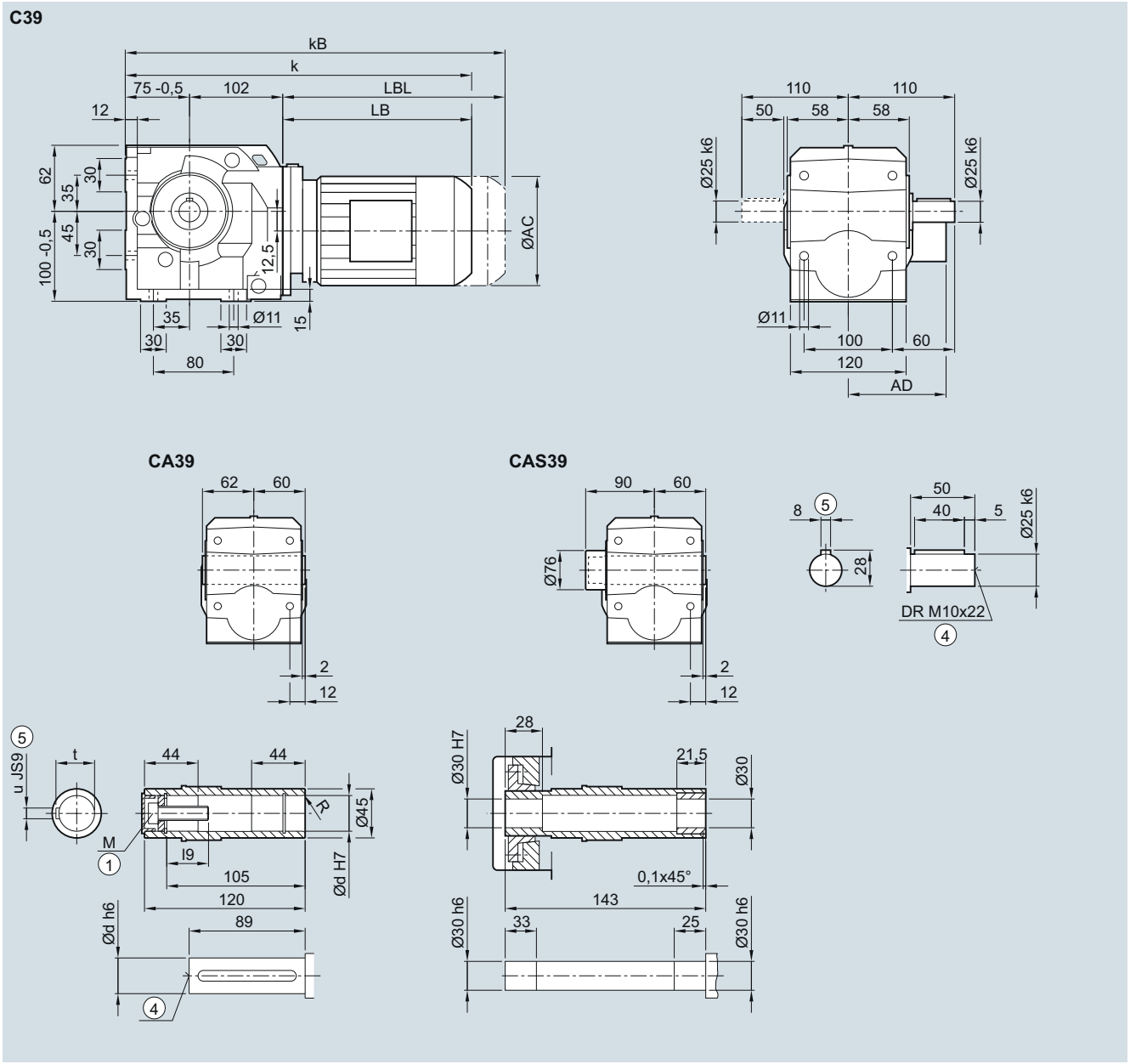

Shaft	d	l9	M	R	t	u
	25	32.6	M10	1.6	28.3	8
	30	32.6	M10	3.0	33.3	8

Motor	LA			LE					
	63	71	71Z	80	80Z	90	90Z	100	100Z
AC	117.8	138.8	138.8	156.3	156.3	173.8	173.8	198.0	198.0
AD[1)]	124.0	134.0	134.0	149.2	149.2	154.2	154.2	170.5	170.5
k	371.0	403.0	422.0	467.0	502.0	528.5	568.5	585.0	620.0
kB	415.5	458.0	477.0	527.0	562.0	598.5	638.5	663.5	698.5
LB	194.0	226.0	245.0	290.0	325.0	351.5	391.5	408.0	443.0
LBL	238.5	281.0	300.0	350.0	385.0	421.5	461.5	486.5	521.5

① ISO 4014 ④ DIN 332 ⑤ Feather key/keyway DIN 6885-1

1) AD depends on the motor options, for other dimensions see page 8/36.

© Siemens AG 2017

C.F.39 gearbox in a flange-mounted design

CF030, CAF030, CAFS030

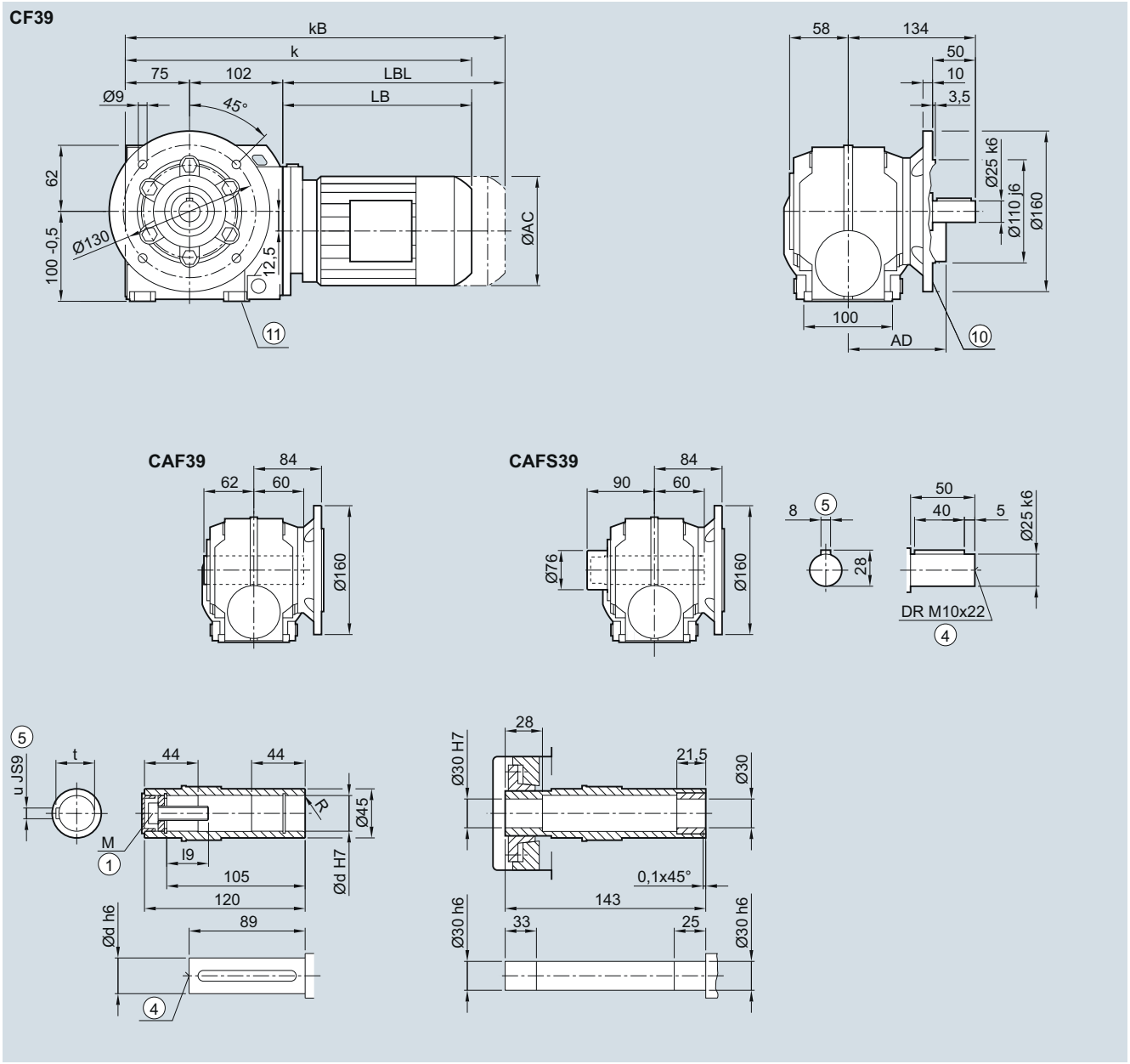

Shaft	d	l9	M	R	t	u
	25	32.6	M10	1.6	28.3	8
	30	32.6	M10	3.0	33.3	8

Motor	LA			LE					
	63	71	71Z	80	80Z	90	90Z	100	100Z
AC	117.8	138.8	138.8	156.3	156.3	173.8	173.8	198.0	198.0
AD[1)]	124.0	134.0	134.0	149.2	149.2	154.2	154.2	170.5	170.5
k	371.0	403.0	422.0	467.0	502.0	528.5	568.5	585.0	620.0
kB	415.5	458.0	477.0	527.0	562.0	598.5	638.5	663.5	698.5
LB	194.0	226.0	245.0	290.0	325.0	351.5	391.5	408.0	443.0
LBL	238.5	281.0	300.0	350.0	385.0	421.5	461.5	486.5	521.5

① ISO 4014 ④ DIN 332
⑤ Feather key/keyway DIN 6885-1 ⑩ For inner contour see page 6/65
⑪ Use bores only for foot-mounted design
1) AD depends on the motor options, for other dimensions see page 8/36.

© Siemens AG 2017

C.Z.39 gearbox in a housing flange design

CZ030, CAZ030, CAZS030

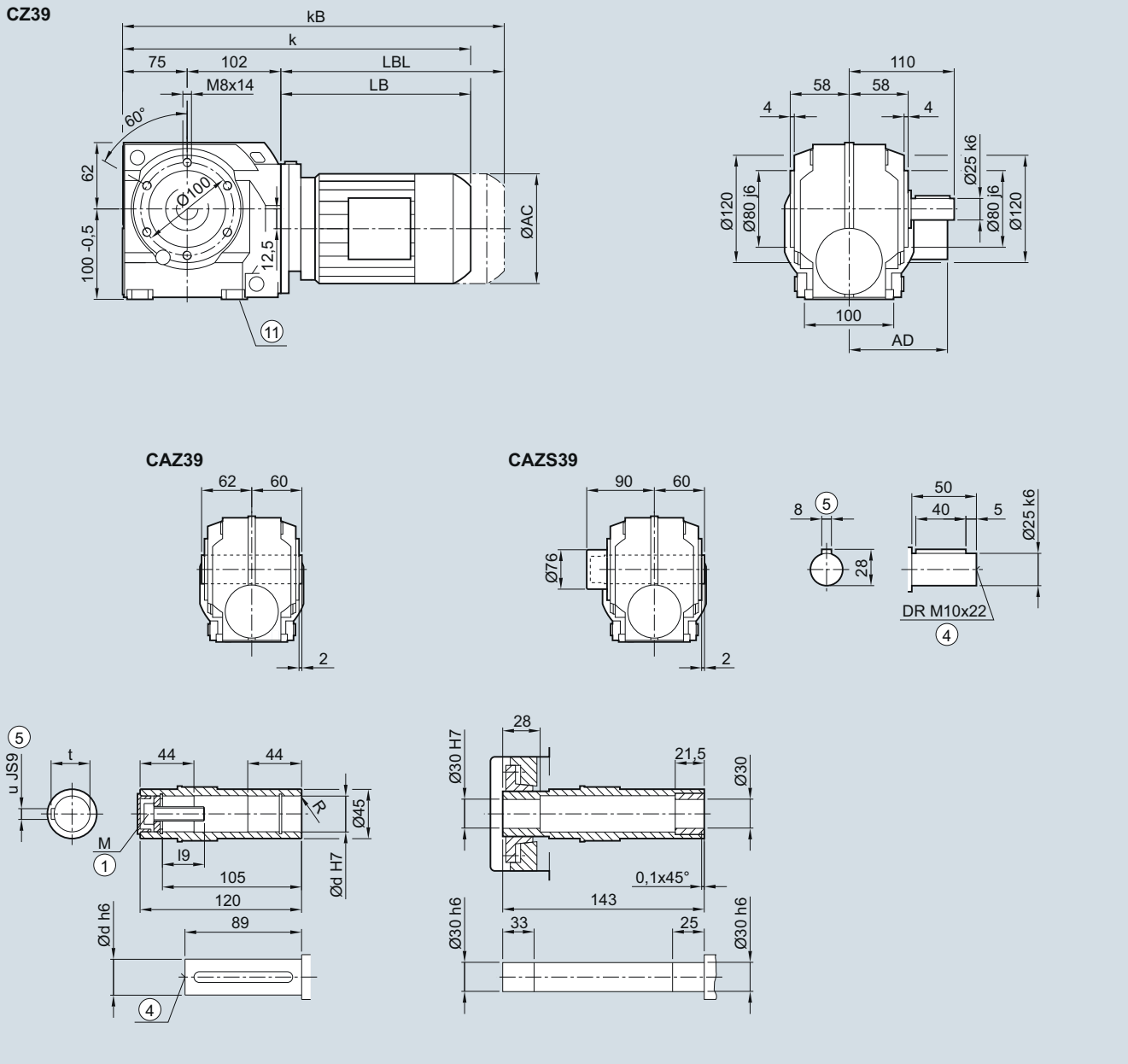

Shaft	d	l9	M	R	t	u
	25	32.6	M10	1.6	28.3	8
	30	32.6	M10	3.0	33.3	8

Motor	LA			LE					
	63	71	71Z	80	80Z	90	90Z	100	100Z
AC	117.8	138.8	138.8	156.3	156.3	173.8	173.8	198.0	198.0
AD[1)]	124.0	134.0	134.0	149.2	149.2	154.2	154.2	170.5	170.5
k	371.0	403.0	422.0	467.0	502.0	528.5	568.5	585.0	620.0
kB	415.5	458.0	477.0	527.0	562.0	598.5	638.5	663.5	698.5
LB	194.0	226.0	245.0	290.0	325.0	351.5	391.5	408.0	443.0
LBL	238.5	281.0	300.0	350.0	385.0	421.5	461.5	486.5	521.5

① ISO 4014 ④ DIN 332 ⑤ Feather key/keyway DIN 6885-1 ⑪ Use bores only for foot-mounted design

1) AD depends on the motor options, for other dimensions see page 8/36.

© Siemens AG 2017

CAD.39 gearbox in a shaft-mounted design

CAD030, CADS030

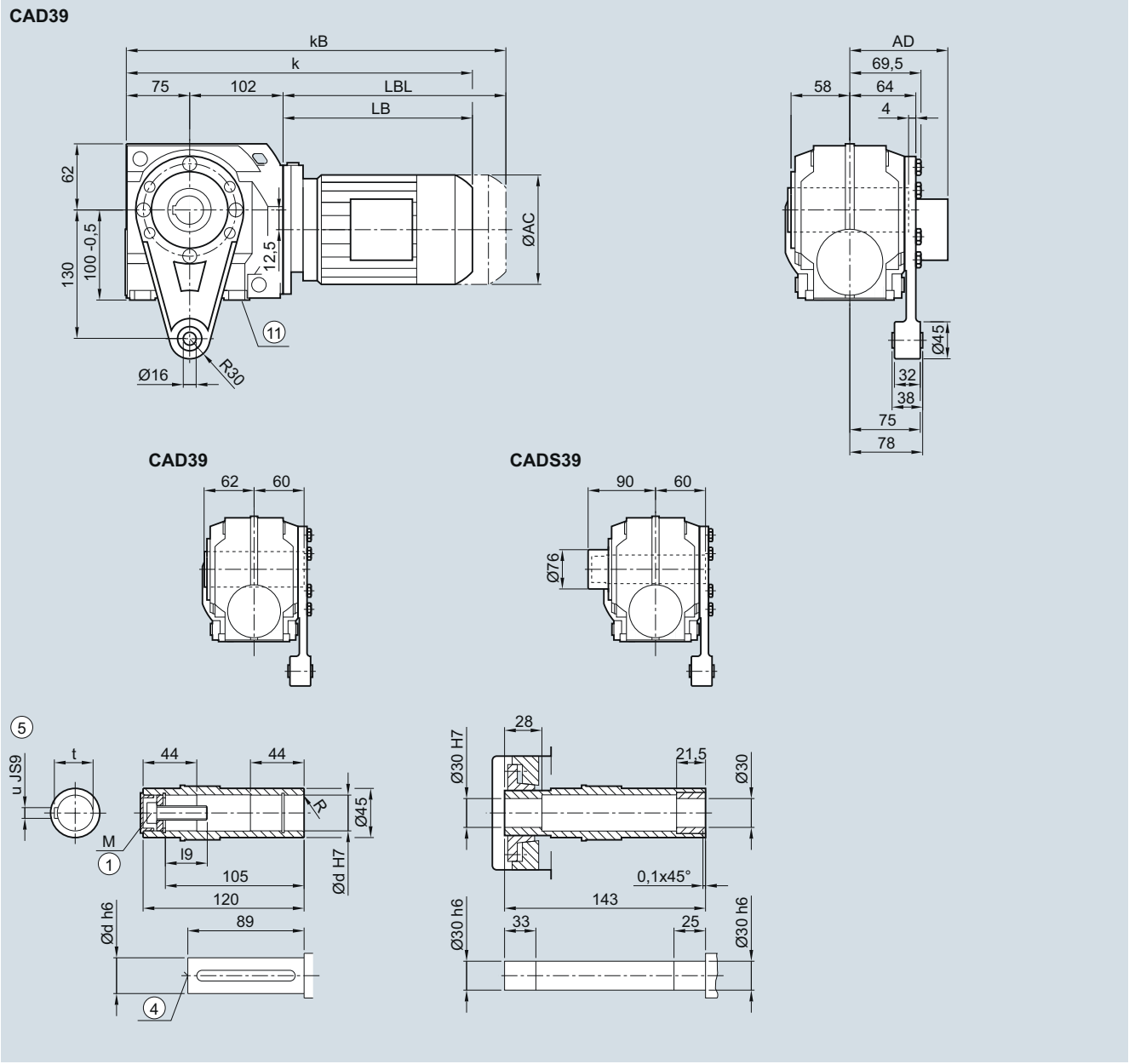

Shaft	d	l9	M	R	t	u
	25	32.6	M10	1.6	28.3	8
	30	32.6	M10	3.0	33.3	8

Motor	LA			LE					
	63	71	71Z	80	80Z	90	90Z	100	100Z
AC	117.8	138.8	138.8	156.3	156.3	173.8	173.8	198.0	198.0
AD[1)]	124.0	134.0	134.0	149.2	149.2	154.2	154.2	170.5	170.5
k	371.0	403.0	422.0	467.0	502.0	528.5	568.5	585.0	620.0
kB	415.5	458.0	477.0	527.0	562.0	598.5	638.5	663.5	698.5
LB	194.0	226.0	245.0	290.0	325.0	351.5	391.5	408.0	443.0
LBL	238.5	281.0	300.0	350.0	385.0	421.5	461.5	486.5	521.5

① ISO 4014 ④ DIN 332 ⑤ Feather key/keyway DIN 6885-1 ⑪ Use bores only for foot-mounted design

1) AD depends on the motor options, for other dimensions see page 8/36.

© Siemens AG 2017

C..49 gearbox in a foot-mounted design

C030, CA030, CAS030

C49

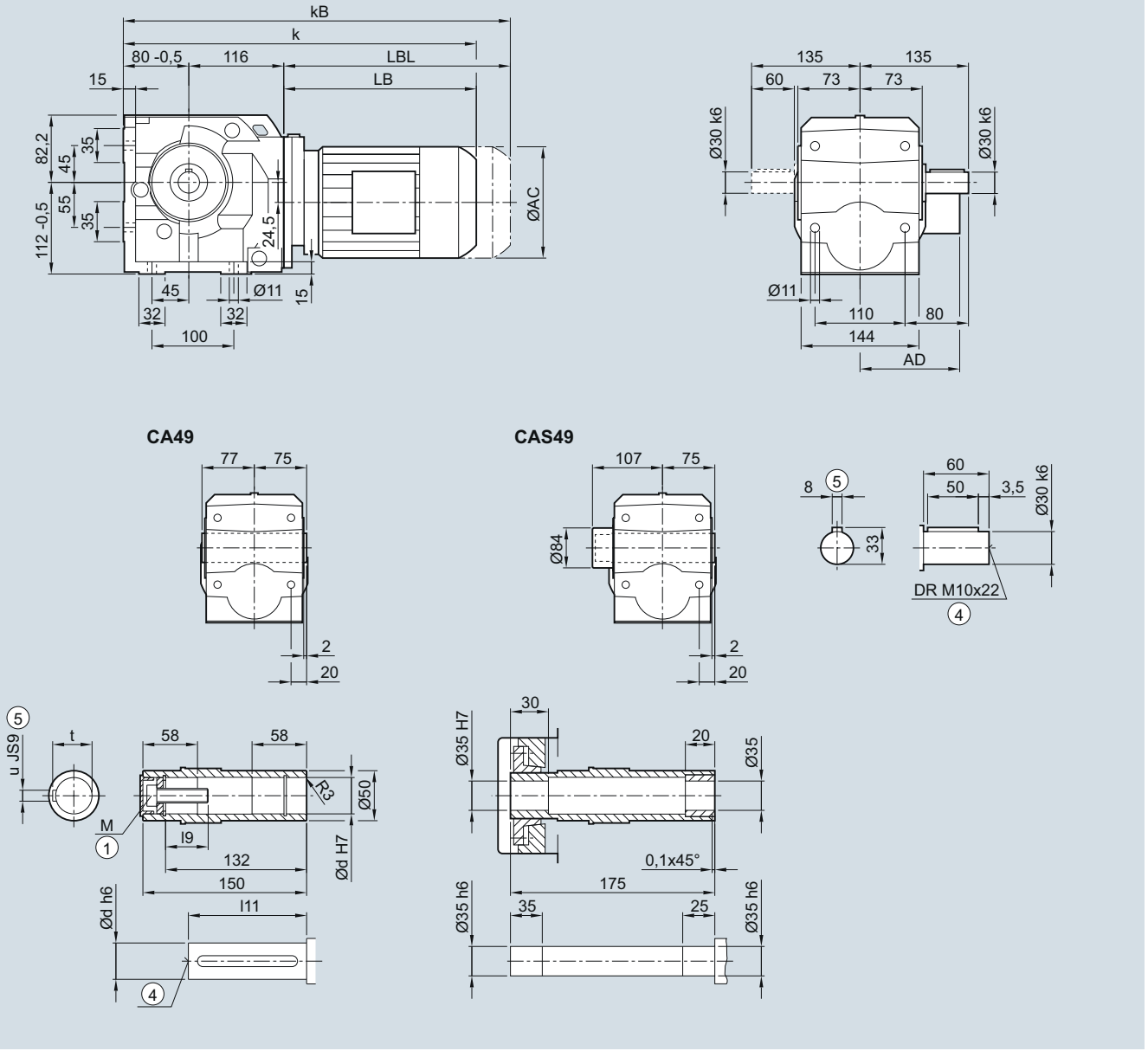

Shaft	d	l9	l11	M	t	u
	30	32.6	114	M10	33.3	8
	35	42	116	M12	38.3	10

Motor	LA			LE							
	63	71	71Z	80	80Z	90	90Z	100	100Z	112	112Z
AC	117.8	138.8	138.8	156.3	156.3	173.8	173.8	198.0	198.0	222.0	222.0
AD[1)]	124.0	134.0	134.0	149.2	149.2	154.2	154.2	170.5	170.5	181.5	181.5
k	380.5	412.5	431.5	476.5	511.5	538.0	578.0	594.5	629.5	604.5	639.0
kB	425.0	467.5	486.5	536.5	571.5	608.0	648.0	673.0	708.0	677.5	712.0
LB	184.5	216.5	235.5	280.5	315.5	342.0	382.0	398.5	433.5	408.5	443.0
LBL	229.0	271.5	290.5	340.5	375.5	412.0	452.0	477.0	512.0	481.5	516.0

① ISO 4014 ④ DIN 332 ⑤ Feather key/keyway DIN 6885-1

1) AD depends on the motor options, for other dimensions see page 8/36.

© Siemens AG 2017

C.F.49 gearbox in a flange-mounted design

CF030, CAF030, CAFS030

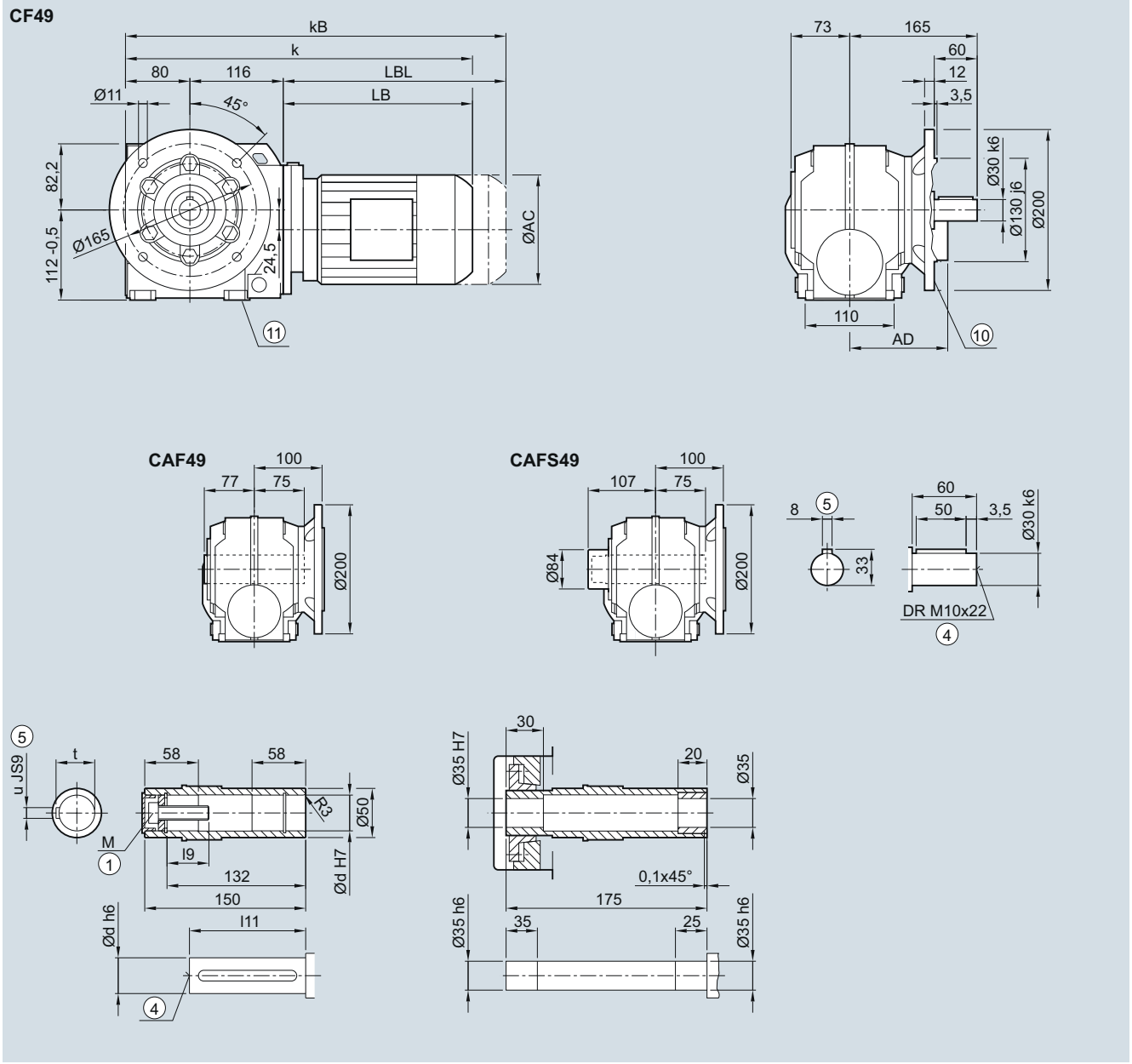

Shaft	d	l9	l11	M	t	u
	30	32.6	114	M10	33.3	8
	35	42	116	M12	38.3	10

Motor	LA			LE							
	63	71	71Z	80	80Z	90	90Z	100	100Z	112	112Z
AC	117.8	138.8	138.8	156.3	156.3	173.8	173.8	198.0	198.0	222.0	222.0
AD[1)]	124.0	134.0	134.0	149.2	149.2	154.2	154.2	170.5	170.5	181.5	181.5
k	380.5	412.5	431.5	476.5	511.5	538.0	578.0	594.5	629.5	604.5	639.0
kB	425.0	467.5	486.5	536.5	571.5	608.0	648.0	673.0	708.0	677.5	712.0
LB	184.5	216.5	235.5	280.5	315.5	342.0	382.0	398.5	433.5	408.5	443.0
LBL	229.0	271.5	290.5	340.5	375.5	412.0	452.0	477.0	512.0	481.5	516.0

① ISO 4014 ④ DIN 332 ⑤ Feather key/keyway DIN 6885-1 ⑩ For inner contour see page 6/65
⑪ Use bores only for foot-mounted design
1) AD depends on the motor options, for other dimensions see page 8/36.

© Siemens AG 2017

Dimensions

C.Z.49 gearbox in a housing flange design

CZ030, CAZ030, CAZS030

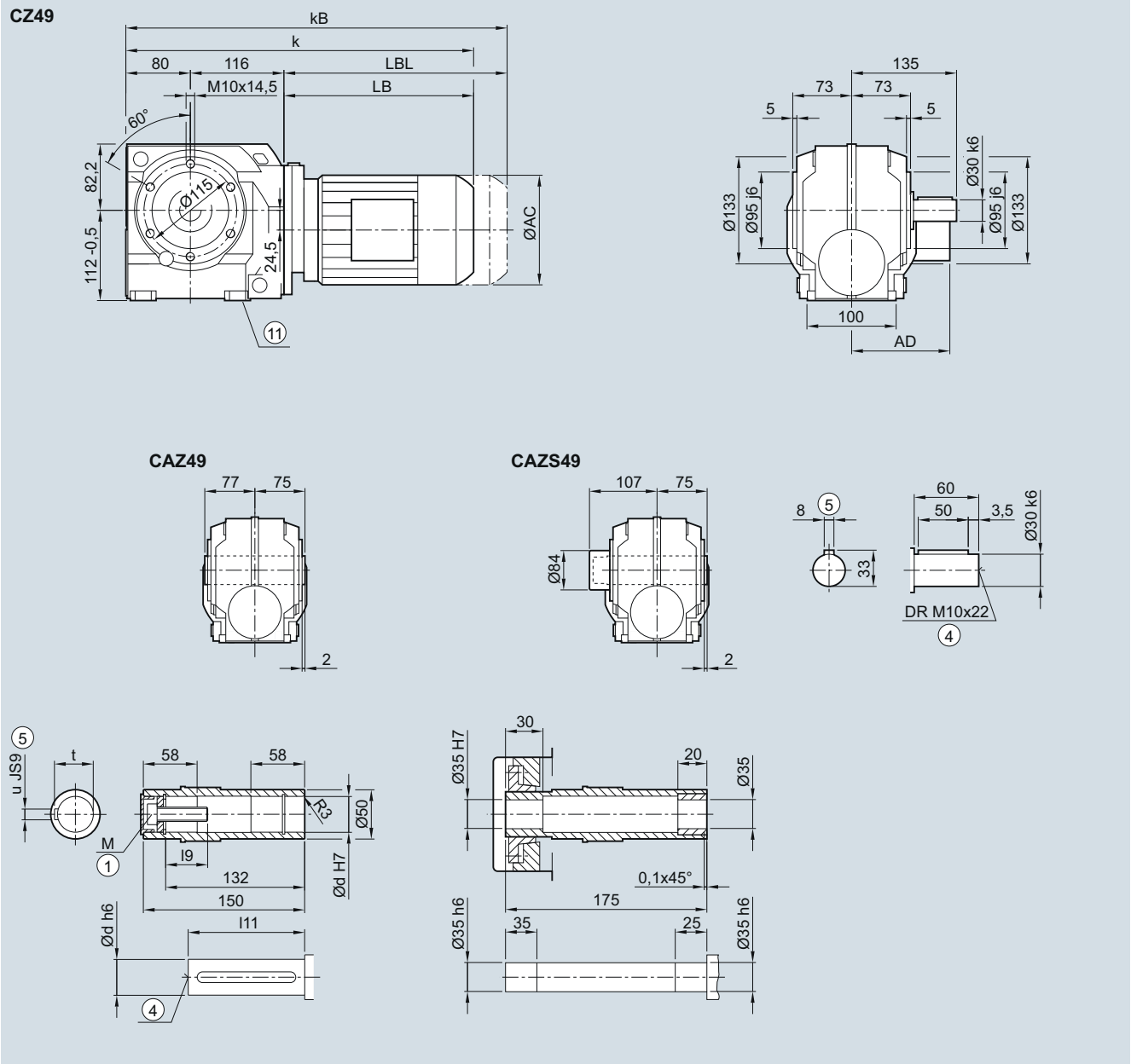

Shaft	d	l9	l11	M	t	u
	30	32.6	114	M10	33.3	8
	35	42	116	M12	38.3	10

Motor	LA			LE							
	63	71	71Z	80	80Z	90	90Z	100	100Z	112	112Z
AC	117.8	138.8	138.8	156.3	156.3	173.8	173.8	198.0	198.0	222.0	222.0
AD[1)]	124.0	134.0	134.0	149.2	149.2	154.2	154.2	170.5	170.5	181.5	181.5
k	380.5	412.5	431.5	476.5	511.5	538.0	578.0	594.5	629.5	604.5	639.0
kB	425.0	467.5	486.5	536.5	571.5	608.0	648.0	673.0	708.0	677.5	712.0
LB	184.5	216.5	235.5	280.5	315.5	342.0	382.0	398.5	433.5	408.5	443.0
LBL	229.0	271.5	290.5	340.5	375.5	412.0	452.0	477.0	512.0	481.5	516.0

① ISO 4014 ④ DIN 332 ⑤ Feather key/keyway DIN 6885-1 ⑪ Use bores only for foot-mounted design

1) AD depends on the motor options, for other dimensions see page 8/36.

© Siemens AG 2017

CAD.49 gearbox in a shaft-mounted design

CAD030, CADS030

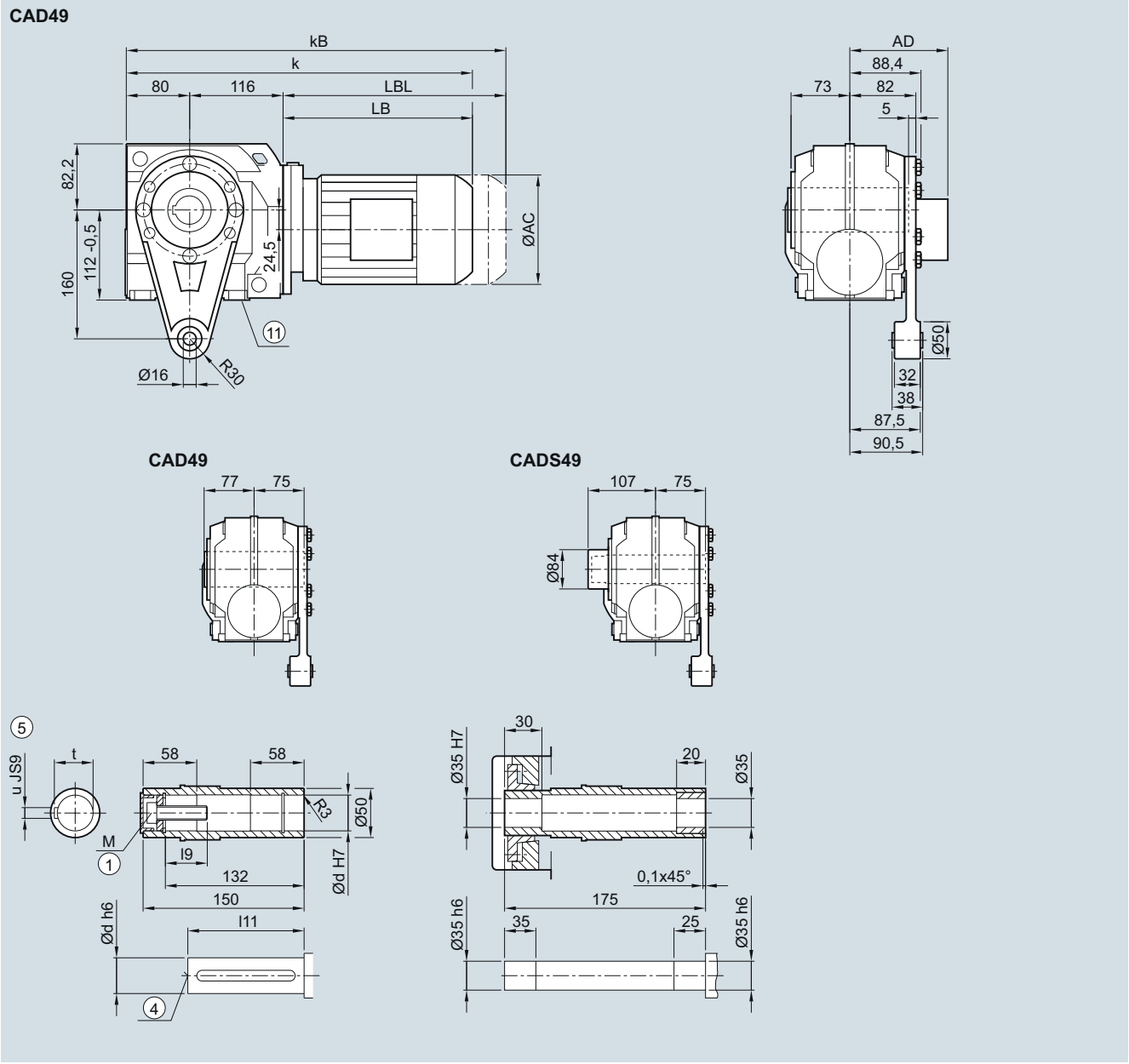

Shaft	d	l9	l11	M	t	u
	30	32.6	114	M10	33.3	8
	35	42	116	M12	38.3	10

Motor	LA			LE							
	63	71	71Z	80	80Z	90	90Z	100	100Z	112	112Z
AC	117.8	138.8	138.8	156.3	156.3	173.8	173.8	198.0	198.0	222.0	222.0
AD[1)]	124.0	134.0	134.0	149.2	149.2	154.2	154.2	170.5	170.5	181.5	181.5
k	380.5	412.5	431.5	476.5	511.5	538.0	578.0	594.5	629.5	604.5	639.0
kB	425.0	467.5	486.5	536.5	571.5	608.0	648.0	673.0	708.0	677.5	712.0
LB	184.5	216.5	235.5	280.5	315.5	342.0	382.0	398.5	433.5	408.5	443.0
LBL	229.0	271.5	290.5	340.5	375.5	412.0	452.0	477.0	512.0	481.5	516.0

① ISO 4014 ④ DIN 332 ⑤ Feather key/keyway DIN 6885-1 ⑪ Use bores only for foot-mounted design

1) AD depends on the motor options, for other dimensions see page 8/36.

© Siemens AG 2017

C..69 gearbox in a foot-mounted design

C030, CA030, CAS030

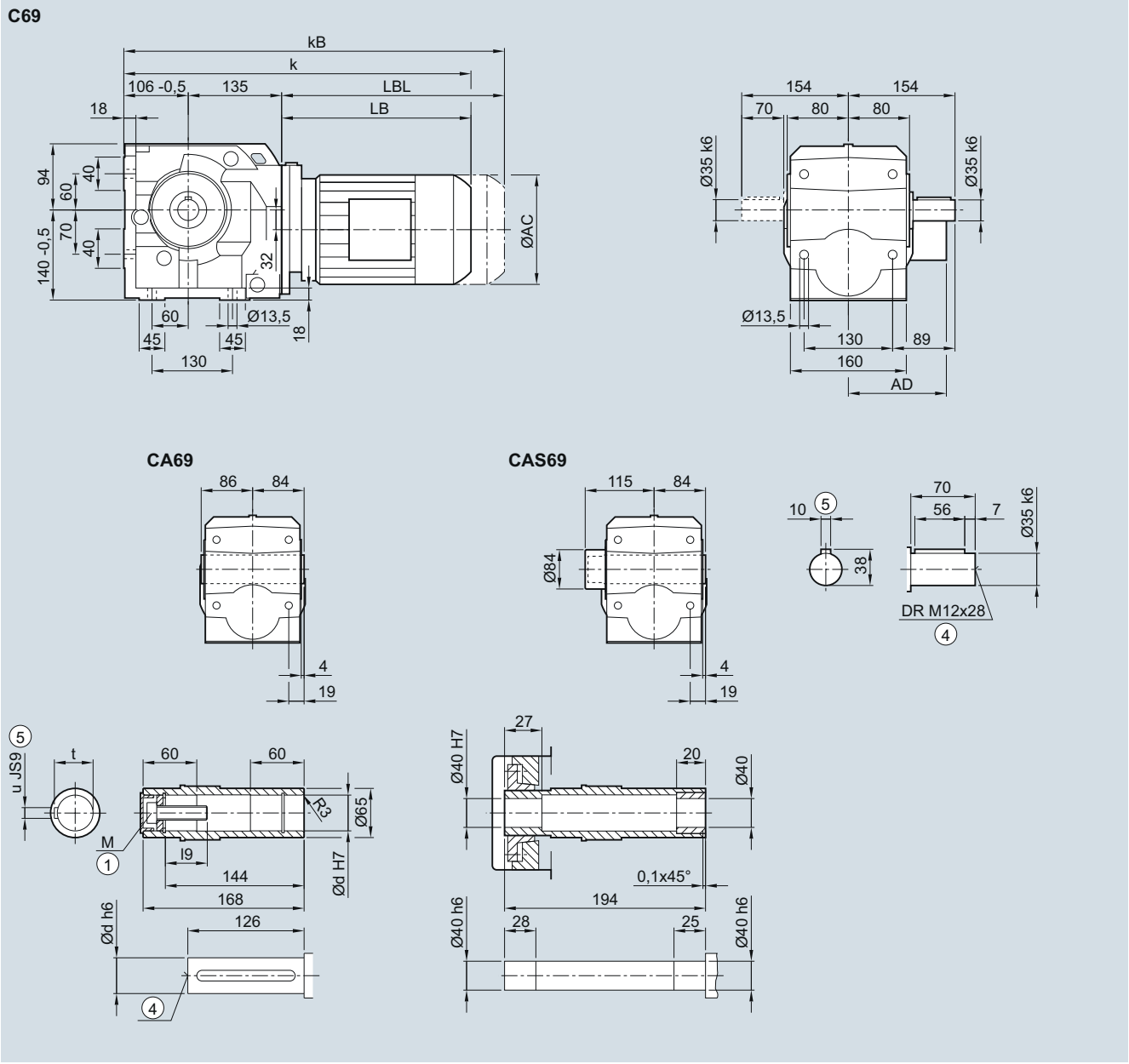

Shaft	d	l9	M	t	u
	40	47.75	M16	43.3	12
	45	48.75	M16	48.8	14

Motor	LA			LE									
	63	71	71Z	80	80Z	90	90Z	100	100Z	112	112Z	132	132Z
AC	117.8	138.8	138.8	156.3	156.3	173.8	173.8	198.0	198.0	222.0	222.0	264.0	264.0
AD[1)]	124.0	134.0	134.0	149.2	149.2	154.2	154.2	170.5	170.5	181.5	181.5	207.0	207.0
k	425.5	457.5	476.5	521.5	556.5	583.0	623.0	639.5	674.5	649.5	684.0	702.5	752.5
kB	470.0	512.5	531.5	581.5	616.5	653.0	693.0	718.0	753.0	722.5	757.0	807.0	857.0
LB	184.5	216.5	235.5	280.5	315.5	342.0	382.0	398.5	433.5	408.5	443.0	461.5	511.5
LBL	229.0	271.5	290.5	340.5	375.5	412.0	452.0	477.0	512.0	481.5	516.0	566.0	616.0

① ISO 4014 ④ DIN 332 ⑤ Feather key/keyway DIN 6885-1

1) AD depends on the motor options, for other dimensions see page 8/36.

© Siemens AG 2017

C.F.69 gearbox in a flange-mounted design

CF030, CAF030, CAFS030

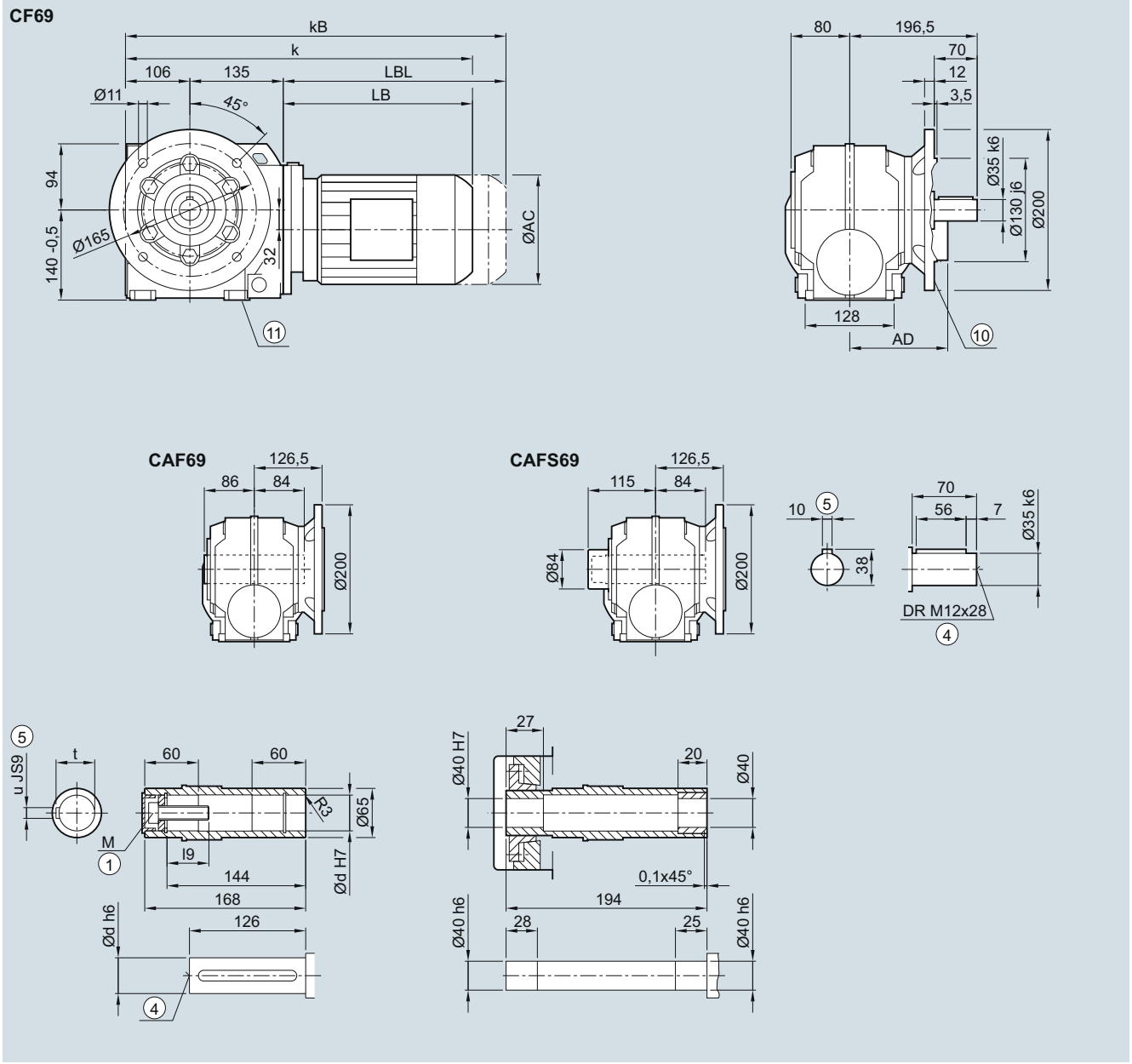

Shaft	d	l9	M	t	u
	40	47.75	M16	43.3	12
	45	48.75	M16	48.8	14

Motor	LA			LE									
	63	71	71Z	80	80Z	90	90Z	100	100Z	112	112Z	132	132Z
AC	117.8	138.8	138.8	156.3	156.3	173.8	173.8	198.0	198.0	222.0	222.0	264.0	264.0
AD[1)]	124.0	134.0	134.0	149.2	149.2	154.2	154.2	170.5	170.5	181.5	181.5	207.0	207.0
k	425.5	457.5	476.5	521.5	556.5	583.0	623.0	639.5	674.5	649.5	684.0	702.5	752.5
kB	470.0	512.5	531.5	581.5	616.5	653.0	693.0	718.0	753.0	722.5	757.0	807.0	857.0
LB	184.5	216.5	235.5	280.5	315.5	342.0	382.0	398.5	433.5	408.5	443.0	461.5	511.5
LBL	229.0	271.5	290.5	340.5	375.5	412.0	452.0	477.0	512.0	481.5	516.0	566.0	616.0

① ISO 4014 ④ DIN 332
⑤ Feather key/keyway DIN 6885-1 ⑩ For inner contour see page 6/65
⑪ Use bores only for foot-mounted design
1) AD depends on the motor options, for other dimensions see page 8/36.

© Siemens AG 2017

C.Z.69 gearbox in a housing flange design

CZ030, CAZ030, CAZS030

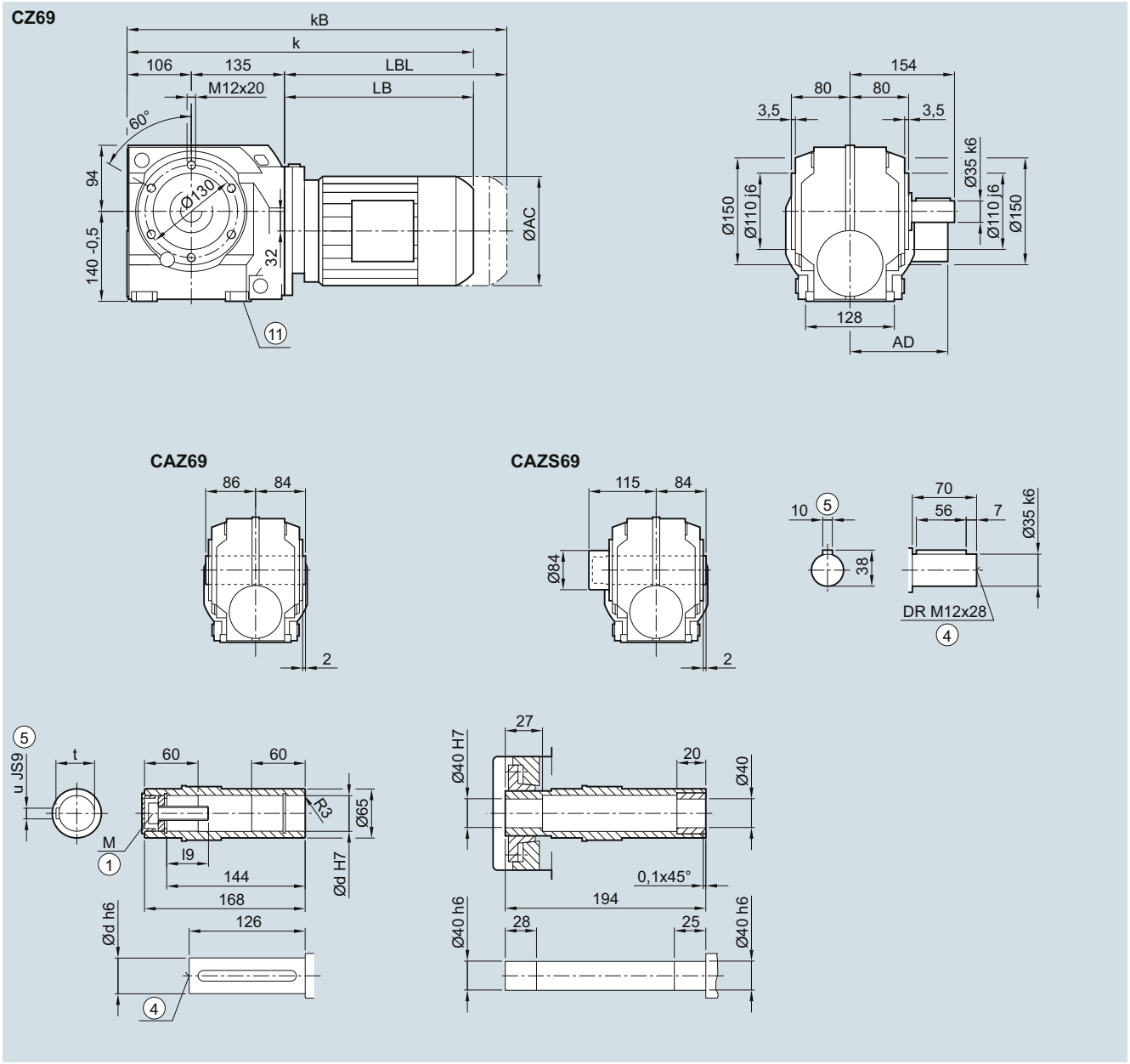

Shaft	d	l9	M	t	u
	40	47.75	M16	43.3	12
	45	48.75	M16	48.8	14

Motor	LA				LE								
	63	71	71Z	80	80Z	90	90Z	100	100Z	112	112Z	132	132Z
AC	117.8	138.8	138.8	156.3	156.3	173.8	173.8	198.0	198.0	222.0	222.0	264.0	264.0
AD[1)]	124.0	134.0	134.0	149.2	149.2	154.2	154.2	170.5	170.5	181.5	181.5	207.0	207.0
k	425.5	457.5	476.5	521.5	556.5	583.0	623.0	639.5	674.5	649.5	684.0	702.5	752.5
kB	470.0	512.5	531.5	581.5	616.5	653.0	693.0	718.0	753.0	722.5	757.0	807.0	857.0
LB	184.5	216.5	235.5	280.5	315.5	342.0	382.0	398.5	433.5	408.5	443.0	461.5	511.5
LBL	229.0	271.5	290.5	340.5	375.5	412.0	452.0	477.0	512.0	481.5	516.0	566.0	616.0

① ISO 4014 ④ DIN 332 ⑤ Feather key/keyway DIN 6885-1 ⑪ Use bores only for foot-mounted design

1) AD depends on the motor options, for other dimensions see page 8/36.

© Siemens AG 2017

CAD.69 gearbox in a shaft-mounted design

CAD030, CADS030

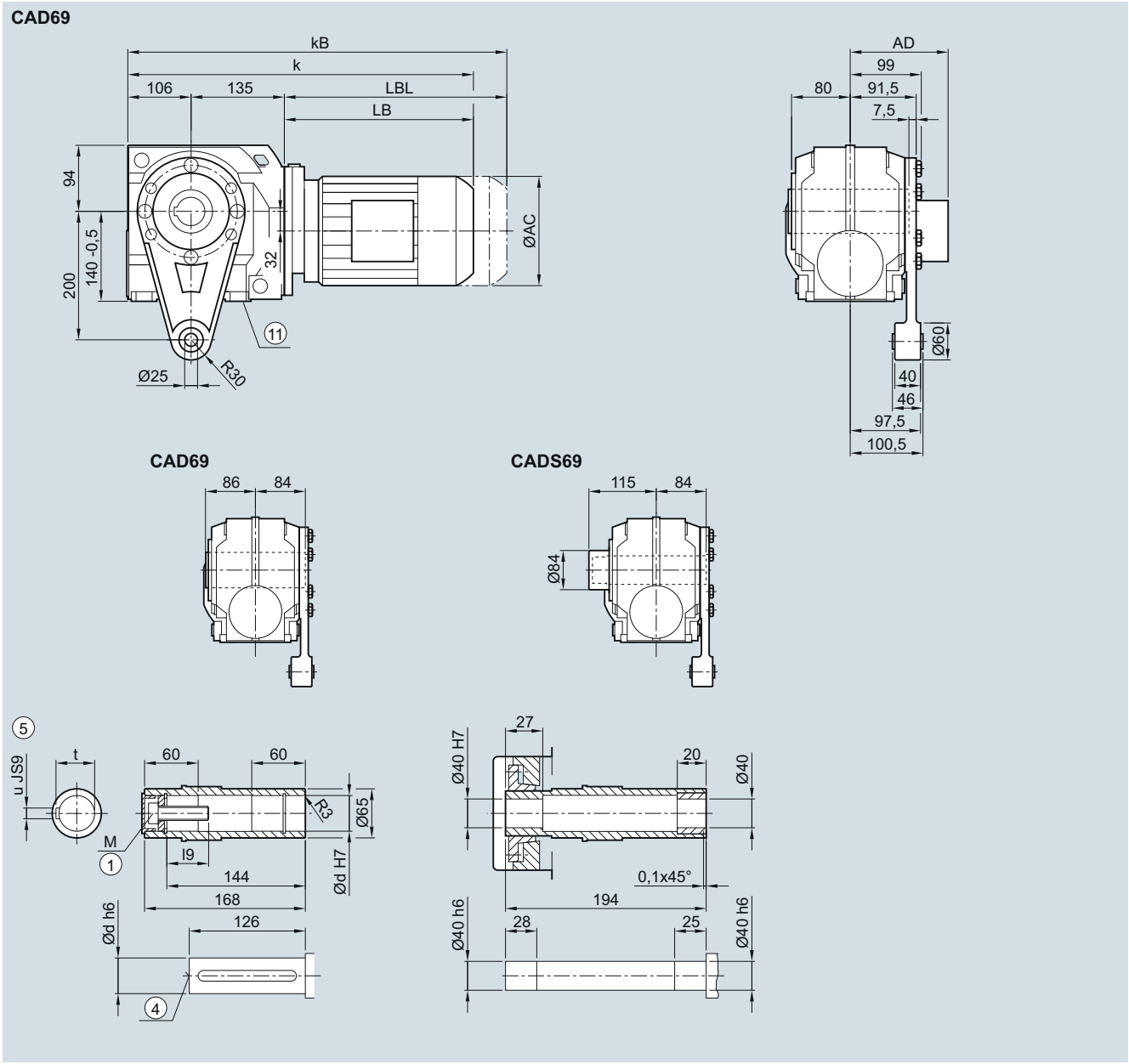

Shaft	d	l9	M	t	u
	40	47.75	M16	43.3	12
	45	48.75	M16	48.8	14

Motor	LA			LE									
	63	71	71Z	80	80Z	90	90Z	100	100Z	112	112Z	132	132Z
AC	117.8	138.8	138.8	156.3	156.3	173.8	173.8	198.0	198.0	222.0	222.0	264.0	264.0
AD[1)]	124.0	134.0	134.0	149.2	149.2	154.2	154.2	170.5	170.5	181.5	181.5	207.0	207.0
k	425.5	457.5	476.5	521.5	556.5	583.0	623.0	639.5	674.5	649.5	684	702.5	752.5
kB	470.0	512.5	531.5	581.5	616.5	653.0	693.0	718.0	753.0	722.5	757	807.0	857.0
LB	184.5	216.5	235.5	280.5	315.5	342.0	382.0	398.5	433.5	408.5	443	461.5	511.5
LBL	229.0	271.5	290.5	340.5	375.5	412.0	452.0	477.0	512.0	481.5	516	566.0	616.0

① ISO 4014 ④ DIN 332 ⑤ Feather key/keyway DIN 6885-1 ⑪ Use bores only for foot-mounted design

1) AD depends on the motor options, for other dimensions see page 8/36.

© Siemens AG 2017

C..89 gearbox in a foot-mounted design

C030, CA030, CAS030

C89

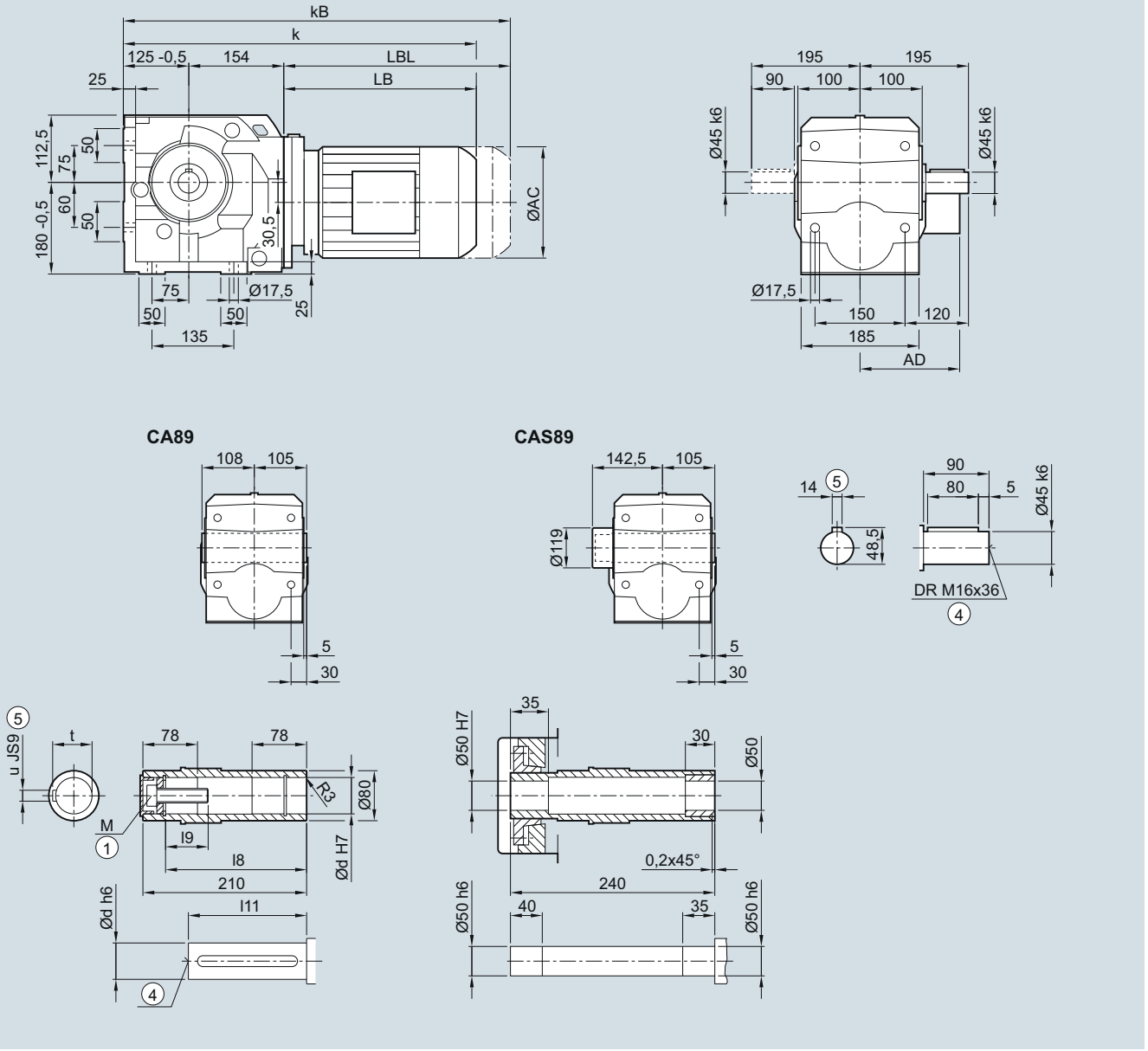

Shaft	d	l8	l9	l11	M	t	u
	50	183	44.5	165	M16	53.8	14
	60	180	57	158	M20	64.4	18

Motor	LA		LE									
	71	71Z	80	80Z	90	90Z	100	100Z	112	112Z	132	132Z
AC	138.8	138.8	156.3	156.3	173.8	173.8	198.0	198.0	222.0	222.0	264.0	264.0
AD[1)]	134.0	134.0	149.2	149.2	154.2	154.2	170.5	170.5	181.5	181.5	207.0	207.0
k	493.5	512.5	553.5	588.5	615.0	655.0	671.5	706.5	681.5	706.5	734.5	784.5
kB	548.5	567.5	613.5	648.5	685.0	725.0	750.0	785.0	754.5	779.5	839.0	889.0
LB	214.5	233.5	274.5	309.5	336.0	376.0	392.5	427.5	402.5	427.5	455.5	505.5
LBL	269.5	288.5	334.5	369.5	406.0	446.0	471.0	506.0	475.5	500.5	560.0	610.0

① ISO 4014 ④ DIN 332 ⑤ Feather key/keyway DIN 6885-1

1) AD depends on the motor options, for other dimensions see page 8/36.

© Siemens AG 2017

C.F.89 gearbox in a flange-mounted design

CF030, CAF030, CAFS030

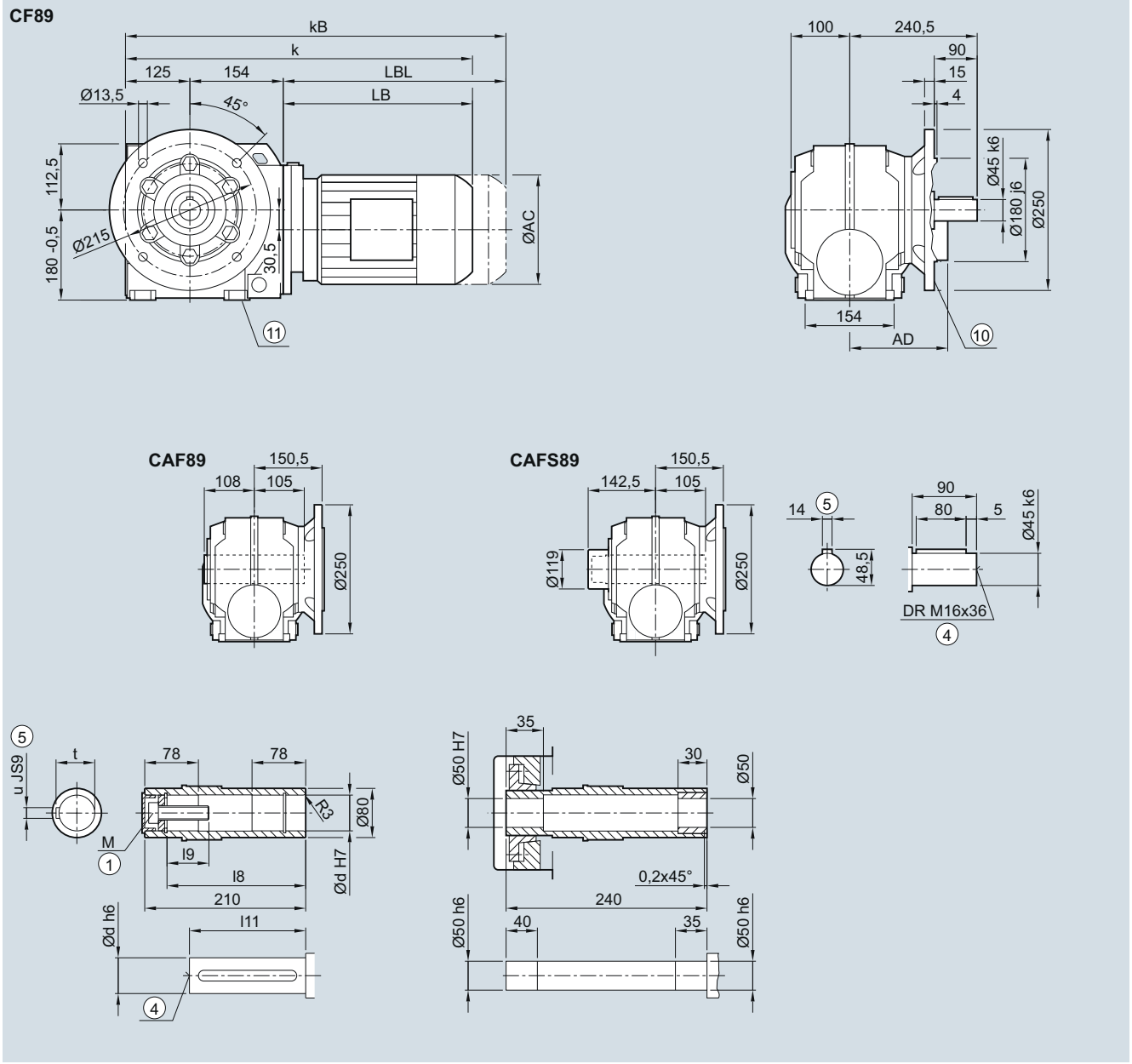

Shaft	d	l8	l9	l11	M	t	u
	50	183	44.5	165	M16	53.8	14
	60	180	57	158	M20	64.4	18

Motor	LA		LE									
	71	71Z	80	80Z	90	90Z	100	100Z	112	112Z	132	132Z
AC	138.8	138.8	156.3	156.3	173.8	173.8	198.0	198.0	222.0	222.0	264.0	264.0
AD[1)]	134.0	134.0	149.2	149.2	154.2	154.2	170.5	170.5	181.5	181.5	207.0	207.0
k	493.5	512.5	553.5	588.5	615.0	655.0	671.5	706.5	681.5	706.5	734.5	784.5
kB	548.5	567.5	613.5	648.5	685.0	725.0	750.0	785.0	754.5	779.5	839.0	889.0
LB	214.5	233.5	274.5	309.5	336.0	376.0	392.5	427.5	402.5	427.5	455.5	505.5
LBL	269.5	288.5	334.5	369.5	406.0	446.0	471.0	506.0	475.5	500.5	560.0	610.0

① ISO 4014 ④ DIN 332 ⑤ Feather key/keyway DIN 6885-1 ⑩ For inner contour see page 6/65
⑪ Use bores only for foot-mounted design
1) AD depends on the motor options, for other dimensions see page 8/36.

© Siemens AG 2017

C.Z.89 gearbox in a housing flange design

CZ030, CAZ030, CAZS030

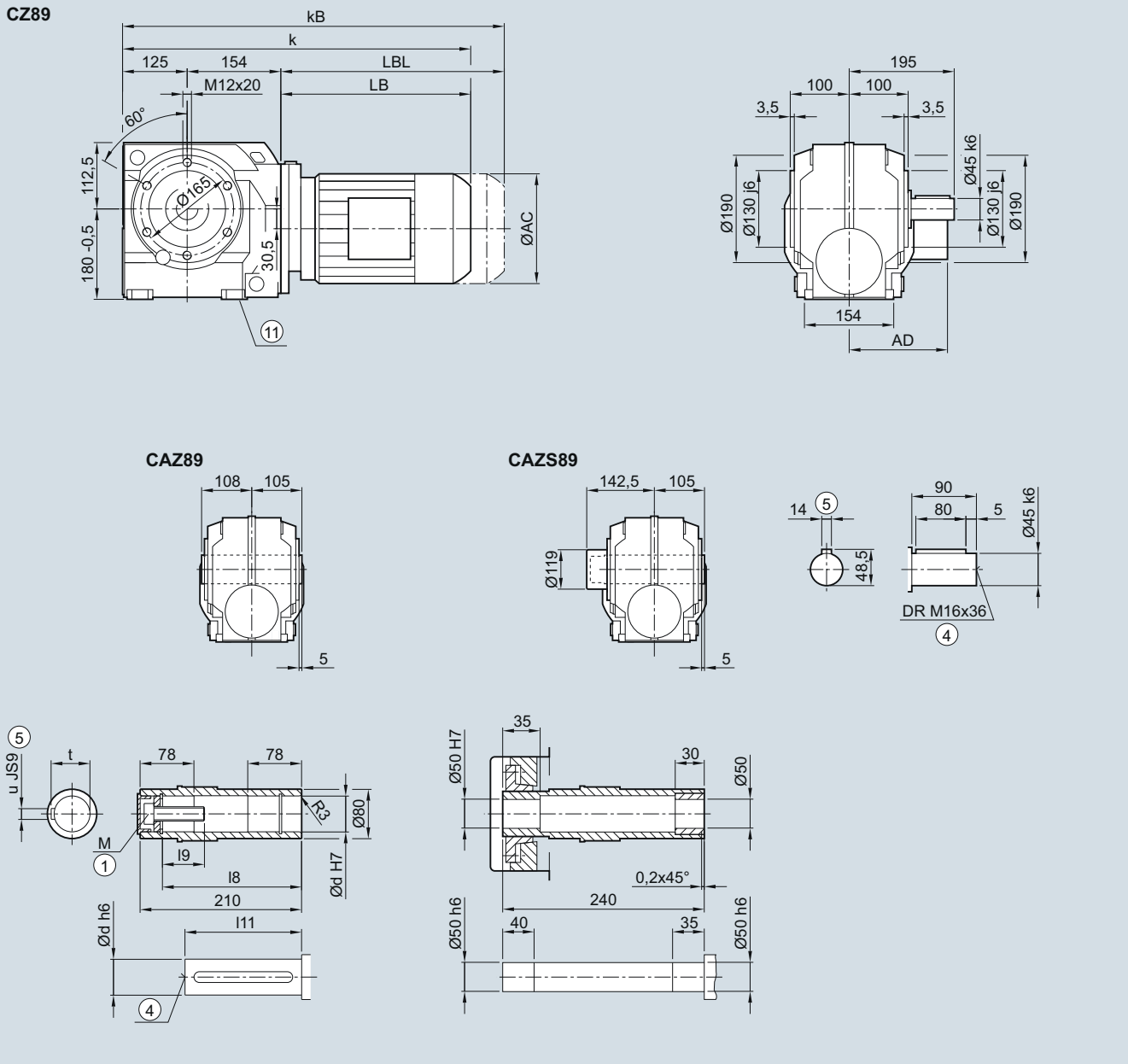

Shaft	d	l8	l9	l11	M	t	u
	50	183	44.5	165	M16	53.8	14
	60	180	57	158	M20	64.4	18

Motor	LA		LE									
	71	71Z	80	80Z	90	90Z	100	100Z	112	112Z	132	132Z
AC	138.8	138.8	156.3	156.3	173.8	173.8	198.0	198.0	222.0	222.0	264.0	264.0
AD[1)]	134.0	134.0	149.2	149.2	154.2	154.2	170.5	170.5	181.5	181.5	207.0	207.0
k	493.5	512.5	553.5	588.5	615.0	655.0	671.5	706.5	681.5	706.5	734.5	784.5
kB	548.5	567.5	613.5	648.5	685.0	725.0	750.0	785.0	754.5	779.5	839.0	889.0
LB	214.5	233.5	274.5	309.5	336.0	376.0	392.5	427.5	402.5	427.5	455.5	505.5
LBL	269.5	288.5	334.5	369.5	406.0	446.0	471.0	506.0	475.5	500.5	560.0	610.0

① ISO 4014 ④ DIN 332 ⑤ Feather key/keyway DIN 6885-1 ⑪ Use bores only for foot-mounted design

1) AD depends on the motor options, for other dimensions see page 8/36.

© Siemens AG 2017

CAD.89 gearbox in a shaft-mounted design

CAD030, CADS030

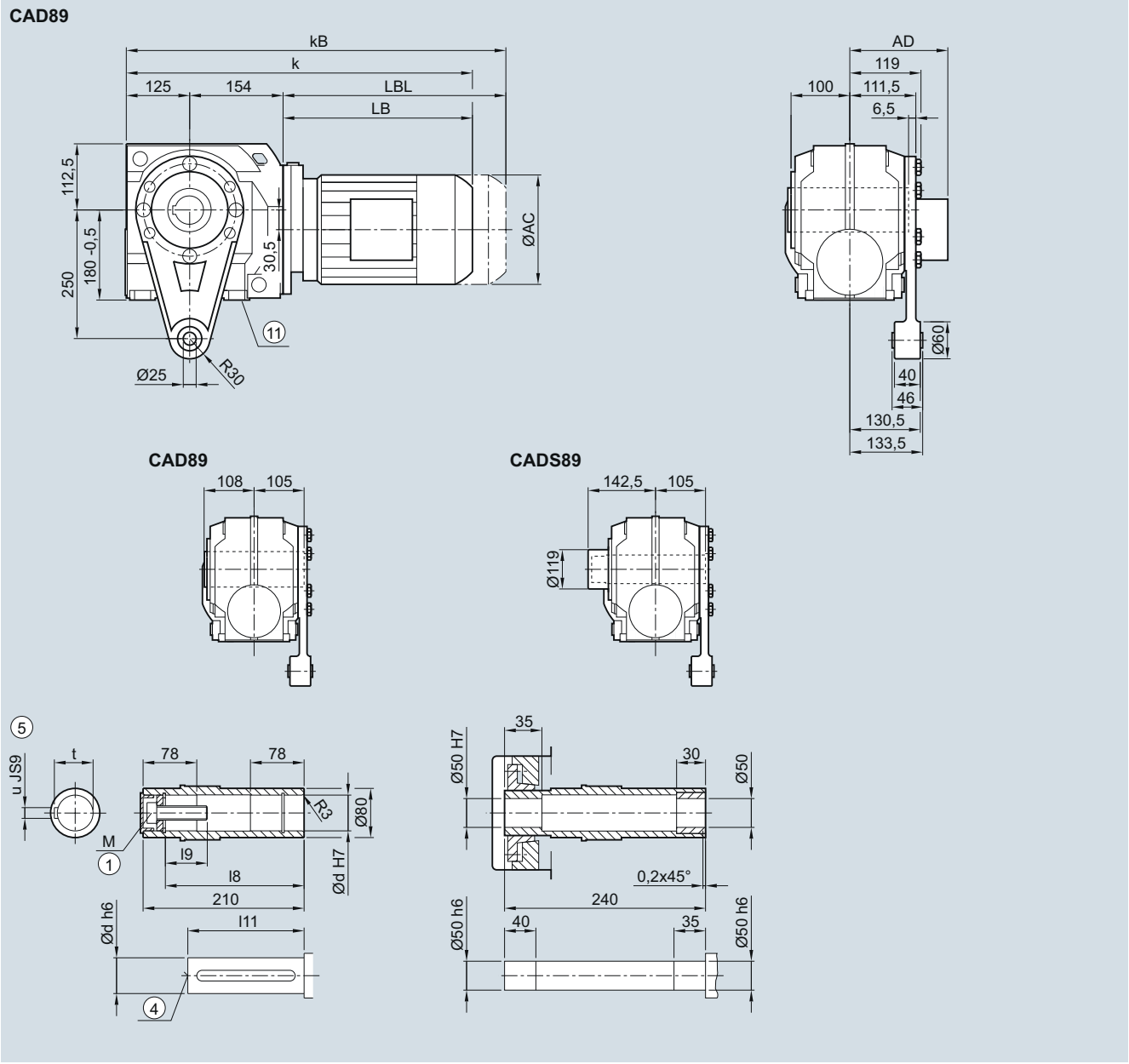

Shaft	d	l8	l9	l11	M	t	u
	50	183	44.5	165	M16	53.8	14
	60	180	57	158	M20	64.4	18

Motor	LA		LE									
	71	71Z	80	80Z	90	90Z	100	100Z	112	112Z	132	132Z
AC	138.8	138.8	156.3	156.3	173.8	173.8	198.0	198.0	222.0	222.0	264.0	264.0
AD[1)]	134.0	134.0	149.2	149.2	154.2	154.2	170.5	170.5	181.5	181.5	207.0	207.0
k	493.5	512.5	553.5	588.5	615.0	655.0	671.5	706.5	681.5	706.5	734.5	784.5
kB	548.5	567.5	613.5	648.5	685.0	725.0	750.0	785.0	754.5	779.5	839.0	889.0
LB	214.5	233.5	274.5	309.5	336.0	376.0	392.5	427.5	402.5	427.5	455.5	505.5
LBL	269.5	288.5	334.5	369.5	406.0	446.0	471.0	506.0	475.5	500.5	560.0	610.0

① ISO 4014 ④ DIN 332 ⑤ Feather key/keyway DIN 6885-1 ⑪ Use bores only for foot-mounted design

1) AD depends on the motor options, for other dimensions see page 8/36.

© Siemens AG 2017

Helical worm tandem geared motors

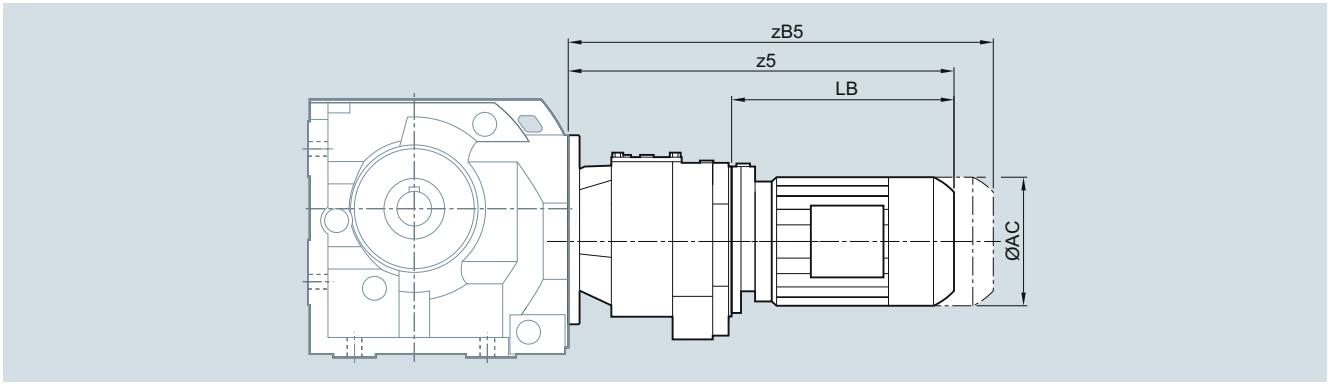

Gearbox	Motor	AC	z5	zB5	LB
C.29-D/Z19	LA63	117.8	331.0	375.5	160.5
C.39-D/Z19	LA63	117.8	331.0	375.5	160.5
	LA71	138.8	363.0	418.0	184.5
	LE71Z	138.8	382.0	437.0	203.5
C.49-D/Z19	LA63	117.8	322.0	366.5	160.5
	LA71	138.8	354.0	409.0	184.5
	LA71Z	138.8	373.0	428.0	203.5
	LE80	156.3	410.0	470.0	240.0
	LE80Z	156.3	445.0	505.0	275.0
C.69-D/Z19	LA63	117.8	322.0	366.5	160.5
	LA71	138.8	354.0	409.0	184.5
	LA71Z	138.8	373.0	428.0	203.5
	LE80	156.3	410.0	470.0	240.0
	LE80Z	156.3	445.0	505.0	275.0
C.89-D/Z39	LA63	117.8	373.5	418.0	194.0
	LA71	138.8	405.5	460.5	226.0
	LA71Z	138.8	424.5	479.5	245.0
	LE80	156.3	469.5	529.5	290.0
	LE80Z	156.3	504.5	564.5	325.0
	LE90	173.8	531.0	601.0	351.5
	LE90Z	173.8	571.0	641.0	391.5

© Siemens AG 2017

SIMOLOC assembly system

CADR

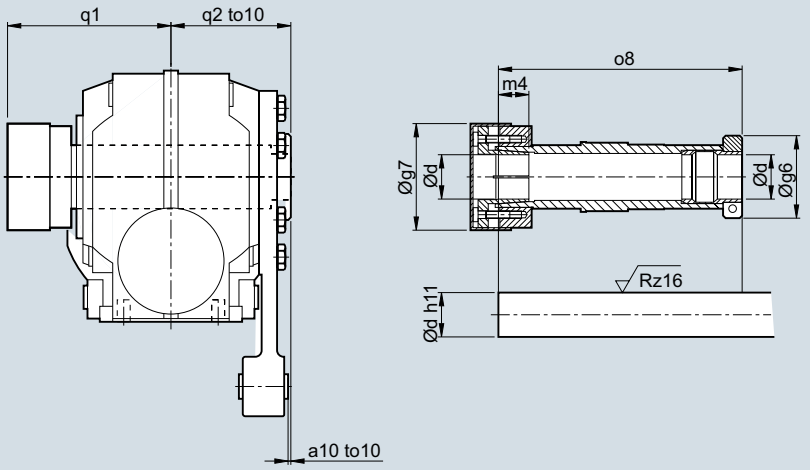

Note mounting tolerance to10 when positioning the torque arm.

d	g6	g7	m4	o8	q1	q2	a10	to10
CADR.29								
20	58.5	56	18.5	151.0	102	75	11	+2.1
1"								+0.6
0.75"								
CADR39								
30	62.0	76	22	160.5	106	75	39	+2.2
25								+0.7
1.25"								
1.1875"								
1"								
CADR49								
35	65.0	84	24	192.0	124	90	35	+2.6
30								+0.8
1.4375"								
1.375"								
1.25"								
1.1875"								
CADR69								
40	79.5	94	30	217.5	138	102	39	+2.5
35								+0.7
1.5"								
1.4375"								
1.375"								
1.625"								
CADR89								
50	89.0	114	32	264.0	171	124	45	+3.4
40								+1.5
2"								
1.9375"								
1.75"								
1.625"								

© Siemens AG 2017

Protection covers

Protection cover for hollow shaft

CAF, CAZ, CAD

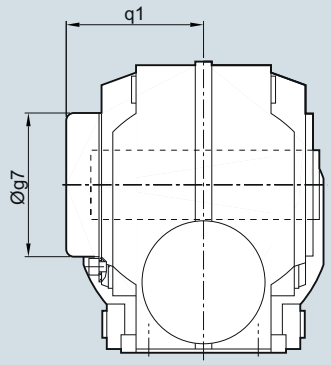

Gearbox type	CA.29	CA.39	CA.49	CA.69	CA.89
Protection cover					
g7	67.0	82.5	80.0	99.0	137.0
q1	76.0	73.0	99.0	95.5	124.5

Protection covers for hollow shaft with shrink disk

CAS, CAFS, CAZS, CADS

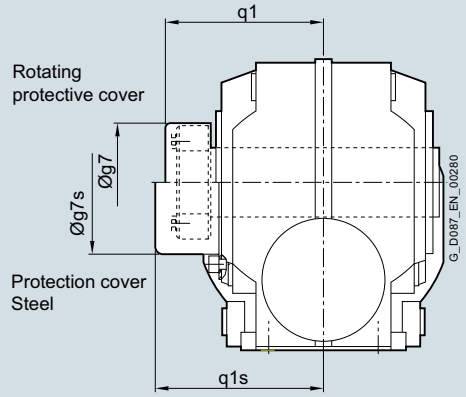

Gearbox type	CA.S29	CA.S39	CA.S49	CA.S69	CA.S89
Rotating protective cover with shrink disk version					
g7	55.0	76.0	84.0	84.0	94.0
q1	85.0	89.5	107.0	115.0	125.5
Protection cover					
g7s	58.0	82.5	86.0	99.0	137.0
q1s	91.0	109.0	122.0	126.5	176.5

Protection covers for hollow shaft with SIMOLOC assembly system

CADR

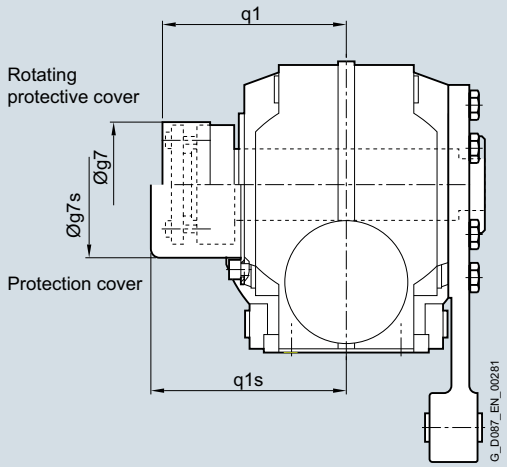

Gearbox type	CADR29	CADR39	CADR49	CADR69	CADR89
Rotating protective cover					
g7	56.0	76.0	84.0	94.0	114.0
q1	101.5	106.0	124.0	144.0	171.0
Protection cover					
g7s	58.0	82.5	86.0	99	137.0
q1s	102.0	109.0	126.0	145.5	176.5

© Siemens AG 2017

Inner contour of the flange design

Notes regarding the design of the customer's interface for the solid shaft design

CF

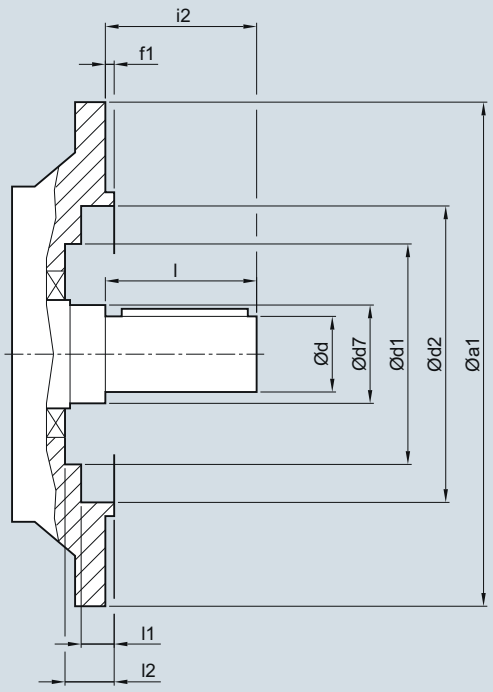

Gearbox type	a1	d	d7	d1	d2	f1	i2	l	l1	l2
CF29	120	20	40	-	70	3.0	40	40	24.0	-
	160			70	101	3.5			8.5	24.5
CF39	160	25	30	-	100	3.5	50	50	5.0	-
CF49	200	30	35	-	118	3.5	60	60	5.5	-
CF69	200	35	45	105	120	4.0	70	70	4.5	48.0
CF89	250	45	70	134	165	4.0	90	90	6.5	53.0

Notes regarding the design of the customer's interface for the hollow shaft design

CAF.

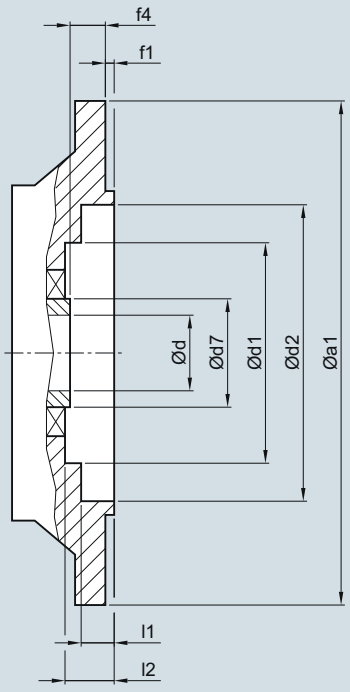

Gearbox type	a1	d	d7	d1	d2	f1	f4	l1	l2
CAF.29	120	20	35	-	70	3.0	23.0	24.0	-
	160			70	101	3.5		8.5	24.5
CAF.39	160	25/30	45	80	102	3.5	24.0	2.0	29.5
CAF.49	200	30/35	50	90	120	3.5	25.0	4.0	30.5
CAF.69	200	40/45	65	105	120	4.0	42.0	4.5	48.0
CAF.89	250	50/60	80	134	147	4	45.5	14.0	53.0

© Siemens AG 2017

Notes

© Siemens AG 2017

Worm geared motors

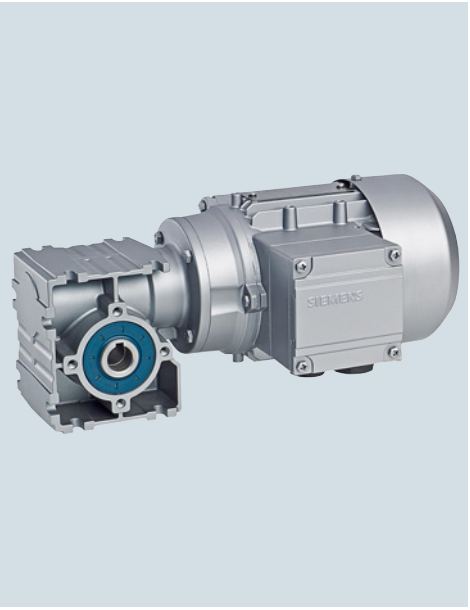

7/2 **Orientation**

7/3 **Geared motors up to 0.55 kW**
7/3 Selection and ordering data

7/7 **Transmission ratios and torques**
7/7 Selection and ordering data

7/9 **General technical specifications**
7/9 Permissible radial force

7/9 **Dimensions**
7/9 Dimensional drawing overview
7/10 Worm geared motors S..09
7/14 Worm geared motors S..19
7/18 Worm geared motors S..29
7/22 Protection cover for hollow shaft

© Siemens AG 2017

Orientation

SIMOGEAR worm geared motors S

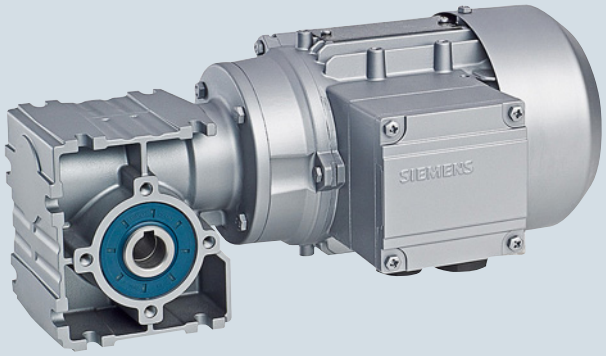

Fig. 7/1 Worm gearbox S

Gearbox designation	Number of frame sizes	Maximum output torque	Transmission ratio	Maximum motor power
		T_{2N}	i	P_1
		Nm	-	kW
S09 … S29 (1-stage)	3	33 … 116	5.0 … 100	0.55

SIMOGEAR worm geared motors are available in the following versions for mounting in any position:

- 1 stage
- Shaft-mounted design with torque arm SAD
- Flange-mounted design SF
- Design with integrated housing flange SZ
- Foot-mounted design S
- Solid shaft design with feather key (at one end or both ends) S
- Hollow shaft design with feather key SA
- Hollow shaft design with plug-in shaft SE

For worm gearboxes, the torque arm is supplied loose to enable it to be mounted as required on site. The position of the torque arm can be freely selected.

© Siemens AG 2017

Selection and ordering data

P_{rated}	n_2	T_2	i	f_B	m	Article No.	Order code
kW	rpm	Nm	-	-	kg	(Article No. supplement ➞ below)	No. of poles
0.09	**S.29-LAI63MF6**						
	8.5	46.2	100	1.6	8	**2KJ3732 - ■ BD11 - ■ ■ A1**	**P01**
	10.6	41.0	80	2.1	8	**2KJ3732 - ■ BD11 - ■ ■ B1**	**P01**
	14.2	34.5	60	2.8	8	**2KJ3732 - ■ BD11 - ■ ■ C1**	**P01**
	S.19-LAI63MF6						
	10.6	39.6	80	0.9	6	**2KJ3731 - ■ BD11 - ■ ■ B1**	**P01**
	14.2	33.8	60	1.4	6	**2KJ3731 - ■ BD11 - ■ ■ C1**	**P01**
	17	30.0	50	1.7	6	**2KJ3731 - ■ BD11 - ■ ■ D1**	**P01**
	S.09-LAI63MF6						
	14.2	29.9	60	0.8	5	**2KJ3730 - ■ BD11 - ■ ■ C1**	**P01**
	17.0	26.8	50	1	5	**2KJ3730 - ■ BD11 - ■ ■ D1**	**P01**
	21.2	23.5	40	1.3	5	**2KJ3730 - ■ BD11 - ■ ■ E1**	**P01**
0.12	**S.29-LAI63ME4**						
	13.5	40.3	100	1.7	8	**2KJ3732 - ■ BC11 - ■ ■ A1**	
	16.9	35.7	80	2.3	8	**2KJ3732 - ■ BC11 - ■ ■ B1**	
	22.5	29.9	60	2.7	8	**2KJ3732 - ■ BC11 - ■ ■ C1**	
	27	26.5	50	3	8	**2KJ3732 - ■ BC11 - ■ ■ D1**	
	33.8	22.9	40	3.4	8	**2KJ3732 - ■ BC11 - ■ ■ E1**	
	45	18.5	30	4.1	8	**2KJ3732 - ■ BC11 - ■ ■ F1**	
	S.19-LAI63ME4						
	16.9	34.8	80	1	6	**2KJ3731 - ■ BC11 - ■ ■ B1**	
	22.5	29.5	60	1.5	6	**2KJ3731 - ■ BC11 - ■ ■ C1**	
	27	26.2	50	1.7	6	**2KJ3731 - ■ BC11 - ■ ■ D1**	
	33.8	22.6	40	2	6	**2KJ3731 - ■ BC11 - ■ ■ E1**	
	45	18.2	30	2.4	6	**2KJ3731 - ■ BC11 - ■ ■ F1**	
	54	15.9	25	2.5	6	**2KJ3731 - ■ BC11 - ■ ■ G1**	
	67.5	13.5	20	3.2	6	**2KJ3731 - ■ BC11 - ■ ■ H1**	
	90	10.6	15	4.1	6	**2KJ3731 - ■ BC11 - ■ ■ J1**	
	135	7.4	10	5.7	6	**2KJ3731 - ■ BC11 - ■ ■ K1**	
	193	5.4	7	7.6	6	**2KJ3731 - ■ BC11 - ■ ■ L1**	
	270	3.9	5	10	6	**2KJ3731 - ■ BC11 - ■ ■ M1**	
	S.09-LAI63ME4						
	22.5	26.4	60	0.88	5	**2KJ3730 - ■ BC11 - ■ ■ C1**	
	27.0	23.5	50	1.1	5	**2KJ3730 - ■ BC11 - ■ ■ D1**	
	33.8	20.5	40	1.4	5	**2KJ3730 - ■ BC11 - ■ ■ E1**	
	45.0	16.9	30	1.7	5	**2KJ3730 - ■ BC11 - ■ ■ F1**	
	54.0	14.8	25	1.9	5	**2KJ3730 - ■ BC11 - ■ ■ G1**	
	67.5	12.7	20	2.2	5	**2KJ3730 - ■ BC11 - ■ ■ H1**	
	90	10.1	15	2.7	5	**2KJ3730 - ■ BC11 - ■ ■ J1**	
	135	7.2	10	3.9	5	**2KJ3730 - ■ BC11 - ■ ■ K1**	
	193	5.2	7	5.3	5	**2KJ3730 - ■ BC11 - ■ ■ L1**	
	270	3.8	5	6.7	5	**2KJ3730 - ■ BC11 - ■ ■ M1**	
0.18	**S.29-LAI71MG6**						
	10.6	82	80	1.1	10	**2KJ3732 - ■ CD11 - ■ ■ B1**	**P01**
	14.2	69.1	60	1.4	10	**2KJ3732 - ■ CD11 - ■ ■ C1**	**P01**
	17	61.5	50	1.5	10	**2KJ3732 - ■ CD11 - ■ ■ D1**	**P01**
	21.2	53.2	40	1.8	10	**2KJ3732 - ■ CD11 - ■ ■ E1**	**P01**
	28.3	43.3	30	2.1	10	**2KJ3732 - ■ CD11 - ■ ■ F1**	**P01**

Article No. supplement		
Shaft design	**1, 5, 6, 7 or 9**	➞ page 10/44
Frequency and voltage	**2 or 9**	➞ page 11/2
Gearbox mounting type	**A, D, F or H**	➞ page 10/37

© Siemens AG 2017

Selection and ordering data

P_{rated}	n_2	T_2	i	f_B	m	Article No.	Order code
kW	rpm	Nm	-	-	kg	(Article No. supplement ➞ below)	No. of poles
0.18	**S.29-LAI63MF4**						
	13.5	60.4	100	1.2	8	**2KJ3732 - ■ BD11 - ■ ■ A1**	
	16.9	53.5	80	1.5	8	**2KJ3732 - ■ BD11 - ■ ■ B1**	
	22.5	44.8	60	1.8	8	**2KJ3732 - ■ BD11 - ■ ■ C1**	
	27	39.8	50	2.0	8	**2KJ3732 - ■ BD11 - ■ ■ D1**	
	33.8	34.3	40	2.3	8	**2KJ3732 - ■ BD11 - ■ ■ E1**	
	45	27.7	30	2.8	8	**2KJ3732 - ■ BD11 - ■ ■ F1**	
	54	24.0	25	3.1	8	**2KJ3732 - ■ BD11 - ■ ■ G1**	
	67.5	20.4	20	3.7	8	**2KJ3732 - ■ BD11 - ■ ■ H1**	
	S.29-LAI63ME2						
	282	5.4	10	9.9	8	**2KJ3732 - ■ BC11 - ■ ■ K1**	**P00**
	403	3.9	7	13.4	8	**2KJ3732 - ■ BC11 - ■ ■ L1**	**P00**
	564	2.8	5	18.1	8	**2KJ3732 - ■ BC11 - ■ ■ M1**	**P00**
	S.19-LAI71MG6						
	17.0	60.1	50	0.86	8	**2KJ3731 - ■ CD11 - ■ ■ D1**	**P01**
	21.2	52.4	40	1.0	8	**2KJ3731 - ■ CD11 - ■ ■ E1**	**P01**
	S.19-LAI63MF4						
	22.5	44.3	60	1.0	6	**2KJ3731 - ■ BD11 - ■ ■ C1**	
	27.0	39.2	50	1.1	6	**2KJ3731 - ■ BD11 - ■ ■ D1**	
	33.8	34.0	40	1.3	6	**2KJ3731 - ■ BD11 - ■ ■ E1**	
	45	27.4	30	1.6	6	**2KJ3731 - ■ BD11 - ■ ■ F1**	
	54	23.8	25	1.6	6	**2KJ3731 - ■ BD11 - ■ ■ G1**	
	67.5	20.3	20	2.2	6	**2KJ3731 - ■ BD11 - ■ ■ H1**	
	90	15.9	15	2.7	6	**2KJ3731 - ■ BD11 - ■ ■ J1**	
	135	11.1	10	3.8	6	**2KJ3731 - ■ BD11 - ■ ■ K1**	
	193	8.0	7	5.1	6	**2KJ3731 - ■ BD11 - ■ ■ L1**	
	270	5.8	5	6.7	6	**2KJ3731 - ■ BD11 - ■ ■ M1**	
	S.19-LAI63ME2						
	282	5.4	10	5.6	6	**2KJ3731 - ■ BC11 - ■ ■ K1**	**P00**
	403	3.9	7	7.5	6	**2KJ3731 - ■ BC11 - ■ ■ L1**	**P00**
	564	2.8	5	9.9	6	**2KJ3731 - ■ BC11 - ■ ■ M1**	**P00**
	S.09-LAI63MF4						
	33.8	30.7	40	0.91	5	**2KJ3730 - ■ BD11 - ■ ■ E1**	
	45.0	25.3	30	1.1	5	**2KJ3730 - ■ BD11 - ■ ■ F1**	
	54.0	22.2	25	1.3	5	**2KJ3730 - ■ BD11 - ■ ■ G1**	
	67.5	19.1	20	1.4	5	**2KJ3730 - ■ BD11 - ■ ■ H1**	
	90	15.2	15	1.8	5	**2KJ3730 - ■ BD11 - ■ ■ J1**	
	135	10.8	10	2.6	5	**2KJ3730 - ■ BD11 - ■ ■ K1**	
	193	7.8	7	3.5	5	**2KJ3730 - ■ BD11 - ■ ■ L1**	
	270	5.8	5	4.5	5	**2KJ3730 - ■ BD11 - ■ ■ M1**	
	S.09-LAI63ME2						
	282	5.2	10	3.9	5	**2KJ3730 - ■ BC11 - ■ ■ K1**	**P00**
	403	3.8	7	5.3	5	**2KJ3730 - ■ BC11 - ■ ■ L1**	**P00**
	564	2.8	5	7	5	**2KJ3730 - ■ BC11 - ■ ■ M1**	**P00**
0.25	**S.29-LAI71MH6**						
	14.3	94.9	60	1	10	**2KJ3732 - ■ CE11 - ■ ■ C1**	**P01**
	17.2	84.5	50	1.1	10	**2KJ3732 - ■ CE11 - ■ ■ D1**	**P01**
	S.29-LAI71MG4						
	16.9	74.3	80	1.1	10	**2KJ3732 - ■ CD11 - ■ ■ B1**	

Article No. supplement		
Shaft design	**1, 5, 6, 7 or 9**	➞ page 10/44
Frequency and voltage	**2 or 9**	➞ page 11/2
Gearbox mounting type	**A, D, F or H**	➞ page 10/37

© Siemens AG 2017

Selection and ordering data

P_{rated}	n_2	T_2	i	f_B	m	Article No.	Order code
kW	rpm	Nm	-	-	kg	(Article No. supplement ➞ below)	No. of poles
0.25	**S.29-LAI71MG4**						
	22.5	62.3	60	1.3	10	**2KJ3732 - ■ CD11 - ■ ■ C1**	
	27	55.3	50	1.4	10	**2KJ3732 - ■ CD11 - ■ ■ D1**	
	33.8	47.6	40	1.7	10	**2KJ3732 - ■ CD11 - ■ ■ E1**	
	45	38.5	30	2	10	**2KJ3732 - ■ CD11 - ■ ■ F1**	
	54	33.4	25	2.3	10	**2KJ3732 - ■ CD11 - ■ ■ G1**	
	S.29-LAI63MF2						
	283	7.4	10	7.1	8	**2KJ3732 - ■ BD11 - ■ ■ K1**	**P00**
	404	5.4	7	9.7	8	**2KJ3732 - ■ BD11 - ■ ■ L1**	**P00**
	566	3.9	5	13.1	8	**2KJ3732 - ■ BD11 - ■ ■ M1**	**P00**
	S.19-LAI71MG4						
	27	54.5	50	0.82	8	**2KJ3731 - ■ CD11 - ■ ■ D1**	
	33.8	47.2	40	0.95	8	**2KJ3731 - ■ CD11 - ■ ■ E1**	
	45	38	30	1.2	8	**2KJ3731 - ■ CD11 - ■ ■ F1**	
	54	33.1	25	1.2	8	**2KJ3731 - ■ CD11 - ■ ■ G1**	
	67.5	28.1	20	1.5	8	**2KJ3731 - ■ CD11 - ■ ■ H1**	
	90	22.1	15	2	8	**2KJ3731 - ■ CD11 - ■ ■ J1**	
	135	15.5	10	2.8	8	**2KJ3731 - ■ CD11 - ■ ■ K1**	
	193	11.2	7	3.7	8	**2KJ3731 - ■ CD11 - ■ ■ L1**	
	270	8.1	5	4.8	8	**2KJ3731 - ■ CD11 - ■ ■ M1**	
	S.19-LAI63MF2						
	283	7.4	10	4	6	**2KJ3731 - ■ BD11 - ■ ■ K1**	**P00**
	404	5.4	7	5.4	6	**2KJ3731 - ■ BD11 - ■ ■ L1**	**P00**
	566	3.9	5	7.1	6	**2KJ3731 - ■ BD11 - ■ ■ M1**	**P00**
	S.09-LAI63MF2						
	70.8	21.3	40	1	5	**2KJ3730 - ■ BD11 - ■ ■ E1**	**P00**
	94.3	17.2	30	1.2	5	**2KJ3730 - ■ BD11 - ■ ■ F1**	**P00**
	113	15.2	25	1.4	5	**2KJ3730 - ■ BD11 - ■ ■ G1**	**P00**
	142	13	20	1.6	5	**2KJ3730 - ■ BD11 - ■ ■ H1**	**P00**
	189	10.3	15	2	5	**2KJ3730 - ■ BD11 - ■ ■ J1**	**P00**
	283	7.3	10	2.8	5	**2KJ3730 - ■ BD11 - ■ ■ K1**	**P00**
	404	5.3	7	3.8	5	**2KJ3730 - ■ BD11 - ■ ■ L1**	**P00**
	566	3.8	5	5	5	**2KJ3730 - ■ BD11 - ■ ■ M1**	**P00**
0.37	**S.29-LAI71MH4**						
	22.8	90.9	60	0.89	10	**2KJ3732 - ■ CE11 - ■ ■ C1**	
	27.4	80.7	50	0.98	10	**2KJ3732 - ■ CE11 - ■ ■ D1**	
	34.2	69.5	40	1.1	10	**2KJ3732 - ■ CE11 - ■ ■ E1**	
	45.7	56.2	30	1.4	10	**2KJ3732 - ■ CE11 - ■ ■ F1**	
	54.8	48.7	25	1.5	10	**2KJ3732 - ■ CE11 - ■ ■ G1**	
	68.5	41.3	20	1.8	10	**2KJ3732 - ■ CE11 - ■ ■ H1**	
	S.29-LAI71MG2						
	274	11.4	10	4.8	10	**2KJ3732 - ■ CD11 - ■ ■ K1**	**P00**
	391	8.2	7	6.5	10	**2KJ3732 - ■ CD11 - ■ ■ L1**	**P00**
	548	6	5	8.7	10	**2KJ3732 - ■ CD11 - ■ ■ M1**	**P00**
	S.19-LAI71MH4						
	54.8	48.3	25	0.81	8	**2KJ3731 - ■ CE11 - ■ ■ G1**	
	68.5	41.1	20	1.1	8	**2KJ3731 - ■ CE11 - ■ ■ H1**	
	91.3	32.2	15	1.3	8	**2KJ3731 - ■ CE11 - ■ ■ J1**	

Article No. supplement		
Shaft design	**1, 5, 6, 7 or 9**	➞ page 10/44
Frequency and voltage	**2 or 9**	➞ page 11/2
Gearbox mounting type	**A, D, F or H**	➞ page 10/37

© Siemens AG 2017

Selection and ordering data

P_{rated}	n_2	T_2	i	f_B	m	Article No.	Order code
kW	rpm	Nm	-	-	kg	(Article No. supplement ➞ below)	No. of poles
0.37	**S.19-LAI71MH4**						
	137	22.6	10	1.9	8	**2KJ3731 - ■ CE11 - ■ ■ K1**	
	196	16.3	7	2.5	8	**2KJ3731 - ■ CE11 - ■ ■ L1**	
	274	11.8	5	3.3	8	**2KJ3731 - ■ CE11 - ■ ■ M1**	
	S.19-LAI71MG2						
	274	11.4	10	2.7	8	**2KJ3731 - ■ CD11 - ■ ■ K1**	**P00**
	391	8.2	7	3.6	8	**2KJ3731 - ■ CD11 - ■ ■ L1**	**P00**
	548	5.9	5	4.7	8	**2KJ3731 - ■ CD11 - ■ ■ M1**	**P00**
0.55	**S.29-LAI71MH2**						
	280	16.5	10	3.2	10	**2KJ3732 - ■ CE11 - ■ ■ K1**	**P00**
	400	11.9	7	4.4	10	**2KJ3732 - ■ CE11 - ■ ■ L1**	**P00**
	560	8.7	5	5.9	10	**2KJ3732 - ■ CE11 - ■ ■ M1**	**P00**
	S.19-LAI71MH2						
	112	35.8	25	0.83	8	**2KJ3731 - ■ CE11 - ■ ■ G1**	**P00**
	140	30.4	20	1	8	**2KJ3731 - ■ CE11 - ■ ■ H1**	**P00**
	S.19-LAI71MH2						
	187	23.7	15	1.3	8	**2KJ3731 - ■ CE11 - ■ ■ J1**	**P00**
	280	16.5	10	1.8	8	**2KJ3731 - ■ CE11 - ■ ■ K1**	**P00**
	400	11.9	7	2.4	8	**2KJ3731 - ■ CE11 - ■ ■ L1**	**P00**
	560	8.6	5	3.2	8	**2KJ3731 - ■ CE11 - ■ ■ M1**	**P00**

Article No. supplement		
Shaft design	**1, 5, 6, 7 or 9**	➞ page 10/44
Frequency and voltage	**2 or 9**	➞ page 11/2
Gearbox mounting type	**A, D, F or H**	➞ page 10/37

© Siemens AG 2017

Selection and ordering data

	Lead angle of the worm	n_{mot} = 2 800 rpm				n_{mot} = 1 400 rpm				Motor frame size		Article No.
i		n_2	T_{2N}	P_{mot}	η	n_2	T_{2N}	P_{mot}	η			
-	γ_m	rpm	Nm	kW	%	rpm	Nm	kW	%	**63**	**71**	
S.09												
80	2.1	35.0	18	0.14	48	17.5	19	0.07	47	✓		**2KJ3730 - ■■■■■ - ■■ B1**
60	2.7	46.7	22	0.20	55	23.3	24	0.11	52	✓		**2KJ3730 - ■■■■■ - ■■ C1**
50	3.2	56.0	21	0.21	58	28.0	27	0.14	56	✓		**2KJ3730 - ■■■■■ - ■■ D1**
40	3.8	70.0	21	0.24	63	35.0	28	0.17	61	✓		**2KJ3730 - ■■■■■ - ■■ E1**
30	4.6	93.3	20	0.29	68	46.7	28	0.20	67	✓		**2KJ3730 - ■■■■■ - ■■ F1**
25	5.2	112.0	20	0.33	72	56.0	27	0.23	70	✓		**2KJ3730 - ■■■■■ - ■■ G1**
20	7.4	140.0	21	0.40	77	70.0	27	0.26	75	✓		**2KJ3730 - ■■■■■ - ■■ H1**
15	9.2	186.7	20	0.48	81	93.3	27	0.33	80	✓		**2KJ3730 - ■■■■■ - ■■ J1**
10	14.0	280.0	20	0.68	86	140.0	27	0.47	85	✓		**2KJ3730 - ■■■■■ - ■■ K1**
7	19.0	400.0	19	0.89	89	200.0	26	0.62	88	✓		**2KJ3730 - ■■■■■ - ■■ L1**
5	25.0	560.0	19	1.22	91	280.0	25	0.81	91	✓		**2KJ3730 - ■■■■■ - ■■ M1**
S.19												
80	3.5	35.0	33	0.22	55	17.5	35	0.12	54	✓		**2KJ3731 - ■■■■■ - ■■ B1**
60	3.5	46.7	33	0.26	61	23.3	44	0.18	59	✓		**2KJ3731 - ■■■■■ - ■■ C1**
50	4.0	56.0	33	0.30	64	28.0	44	0.20	63	✓	✓	**2KJ3731 - ■■■■■ - ■■ D1**
40	4.5	70.0	31	0.33	68	35.0	43	0.24	67	✓	✓	**2KJ3731 - ■■■■■ - ■■ E1**
30	5.5	93.3	31	0.42	73	46.7	41	0.28	72	✓	✓	**2KJ3731 - ■■■■■ - ■■ F1**
25	6.5	112.0	31	0.48	76	56.0	41	0.32	75	✓	✓	**2KJ3731 - ■■■■■ - ■■ G1**
20	9.5	140.0	31	0.56	81	70.0	41	0.38	80	✓	✓	**2KJ3731 - ■■■■■ - ■■ H1**
15	11.0	186.7	30	0.70	84	93.3	41	0.48	84	✓	✓	**2KJ3731 - ■■■■■ - ■■ J1**
10	17.0	280.0	30	1.00	88	140.0	40	0.67	88	✓	✓	**2KJ3731 - ■■■■■ - ■■ K1**
7	17.0	400.0	29	1.33	91	200.0	39	0.91	90	✓	✓	**2KJ3731 - ■■■■■ - ■■ L1**
5	23.0	560.0	28	1.78	92	280.0	37	1.18	92	✓	✓	**2KJ3731 - ■■■■■ - ■■ M1**
S.29												
100	2.0	28.0	57	0.33	50	14.0	72	0.22	49	✓		**2KJ3732 - ■■■■■ - ■■ A1**
80	2.5	35.0	57	0.39	54	17.5	80	0.27	54	✓	✓	**2KJ3732 - ■■■■■ - ■■ B1**
60	3.0	46.7	57	0.46	60	23.3	78	0.32	59	✓	✓	**2KJ3732 - ■■■■■ - ■■ C1**
50	3.5	56.0	55	0.50	64	28.0	75	0.35	63	✓	✓	**2KJ3732 - ■■■■■ - ■■ D1**
40	4.5	70.0	55	0.59	68	35.0	74	0.40	68	✓	✓	**2KJ3732 - ■■■■■ - ■■ E1**
30	5.0	93.3	53	0.71	73	46.7	73	0.49	73	✓	✓	**2KJ3732 - ■■■■■ - ■■ F1**
25	6.0	112.0	53	0.82	76	56.0	73	0.56	76	✓	✓	**2KJ3732 - ■■■■■ - ■■ G1**
20	8.5	140.0	53	0.96	81	70.0	73	0.67	80	✓	✓	**2KJ3732 - ■■■■■ - ■■ H1**
15	10.0	186.7	53	1.23	84	93.3	72	0.84	84	✓	✓	**2KJ3732 - ■■■■■ - ■■ J1**
10	15.0	280.0	53	1.77	88	140.0	72	1.20	88	✓	✓	**2KJ3732 - ■■■■■ - ■■ K1**
7	15.0	400.0	53	2.44	91	200.0	71	1.63	91	✓	✓	**2KJ3732 - ■■■■■ - ■■ L1**
5	21.0	560.0	51	3.22	93	280.0	69	2.18	93	✓	✓	**2KJ3732 - ■■■■■ - ■■ M1**

© Siemens AG 2017

Selection and ordering data

	Lead angle of the worm	n_{mot} = 900 rpm				n_{mot} = 500 rpm				Motor frame size		Article No.
i		n_2	T_{2N}	P_{mot}	η	n_2	T_{2N}	P_{mot}	η			
-	γ_m	rpm	Nm	kW	%	rpm	Nm	kW	%	63	71	
S.09												
80	2.1	11.3	19	0.05	44	6.3	20	0.03	40	✓		2KJ3730 - ■■■■■ - ■■ B1
60	2.7	15.0	24	0.08	50	8.3	24	0.05	45	✓		2KJ3730 - ■■■■■ - ■■ C1
50	3.2	18.0	27	0.10	53	10.0	28	0.06	49	✓		2KJ3730 - ■■■■■ - ■■ D1
40	3.8	22.5	31	0.13	58	12.5	31	0.08	54	✓		2KJ3730 - ■■■■■ - ■■ E1
30	4.6	30.0	32	0.16	64	16.7	33	0.10	60	✓		2KJ3730 - ■■■■■ - ■■ F1
25	5.2	36.0	32	0.18	68	20.0	32	0.10	64	✓		2KJ3730 - ■■■■■ - ■■ G1
20	7.4	45.0	31	0.20	73	25.0	31	0.12	70	✓		2KJ3730 - ■■■■■ - ■■ H1
15	9.2	60.0	33	0.27	78	33.3	33	0.15	75	✓		2KJ3730 - ■■■■■ - ■■ J1
10	14.0	90.0	32	0.36	84	50.0	33	0.21	81	✓		2KJ3730 - ■■■■■ - ■■ K1
7	19.0	128.6	31	0.48	87	71.4	33	0.29	85	✓		2KJ3730 - ■■■■■ - ■■ L1
5	25.0	180.0	30	0.63	90	100.0	33	0.39	88	✓		2KJ3730 - ■■■■■ - ■■ M1
S.19												
80	3.5	11.3	35	0.08	51	6.3	36	0.05	47	✓		2KJ3731 - ■■■■■ - ■■ B1
60	3.5	15.0	49	0.14	57	8.3	51	0.09	52	✓		2KJ3731 - ■■■■■ - ■■ C1
50	4.0	18.0	51	0.16	61	10.0	59	0.11	56	✓	✓	2KJ3731 - ■■■■■ - ■■ D1
40	4.5	22.5	51	0.18	65	12.5	64	0.14	61	✓	✓	2KJ3731 - ■■■■■ - ■■ E1
30	5.5	30.0	50	0.22	70	16.7	63	0.17	66	✓	✓	2KJ3731 - ■■■■■ - ■■ F1
25	6.5	36.0	49	0.25	74	20.0	62	0.19	70	✓	✓	2KJ3731 - ■■■■■ - ■■ G1
20	9.5	45.0	50	0.30	78	25.0	62	0.22	75	✓	✓	2KJ3731 - ■■■■■ - ■■ H1
15	11.0	60.0	50	0.38	82	33.3	62	0.27	79	✓	✓	2KJ3731 - ■■■■■ - ■■ J1
10	17.0	90.0	49	0.53	87	50.0	61	0.38	85	✓	✓	2KJ3731 - ■■■■■ - ■■ K1
7	17.0	128.6	47	0.70	90	71.4	58	0.49	88	✓	✓	2KJ3731 - ■■■■■ - ■■ L1
5	23.0	180.0	44	0.91	91	100.0	56	0.65	90	✓	✓	2KJ3731 - ■■■■■ - ■■ M1
S.29												
100	2.0	9.0	72	0.14	47	5.0	72	0.09	43	✓		2KJ3732 - ■■■■■ - ■■ A1
80	2.5	11.3	92	0.21	52	6.3	93	0.13	48	✓	✓	2KJ3732 - ■■■■■ - ■■ B1
60	3.0	15.0	93	0.26	57	8.3	116	0.19	53	✓	✓	2KJ3732 - ■■■■■ - ■■ C1
50	3.5	18.0	90	0.28	61	10.0	115	0.21	57	✓	✓	2KJ3732 - ■■■■■ - ■■ D1
40	4.5	22.5	90	0.32	66	12.5	113	0.24	62	✓	✓	2KJ3732 - ■■■■■ - ■■ E1
30	5.0	30.0	86	0.38	72	16.7	110	0.28	68	✓	✓	2KJ3732 - ■■■■■ - ■■ F1
25	6.0	36.0	85	0.43	75	20.0	109	0.32	71	✓	✓	2KJ3732 - ■■■■■ - ■■ G1
20	8.5	45.0	85	0.51	79	25.0	109	0.38	76	✓	✓	2KJ3732 - ■■■■■ - ■■ H1
15	10.0	60.0	85	0.64	83	33.3	109	0.47	81	✓	✓	2KJ3732 - ■■■■■ - ■■ J1
10	15.0	90.0	85	0.92	87	50.0	109	0.66	86	✓	✓	2KJ3732 - ■■■■■ - ■■ K1
7	15.0	128.6	84	1.26	90	71.4	107	0.90	89	✓	✓	2KJ3732 - ■■■■■ - ■■ L1
5	21.0	180.0	82	1.68	92	100.0	105	1.21	91	✓	✓	2KJ3732 - ■■■■■ - ■■ M1

© Siemens AG 2017

Permissible radial force F_{Rperm}

Gearbox type	d mm	l mm	y mm	z mm	a kNmm	F_{Rperm} in N with x = l/2 for output speeds n_2 in rpm ≤ 16	≤ 25	≤ 40	≤ 63	≤ 100	≤ 160	≤ 250	≤ 400
S09	16	40	83.5	63.5	36 000	1 800	1 800	1 800	1 800	1 800	1 690	1 400	1 120
SF09			106.0	86.0		1 800	1 800	1 800	1 800	1 620	1 330	1 100	880
S19	20	40	98.0	78.0	76 000	3 800	3 800	3 800	3 200	2 650	2 180	1 780	1 420
SF19			128.0	108.0		3 200	3 120	2 920	2 450	2 030	1 670	1 360	1 090
S29	20	40	120.5	100.5	72 000	3 600	3 600	3 600	3 600	3 600	3 290	2 680	2 120
SF29			153.5	133.5		3 600	3 600	3 600	3 600	3 150	2 580	2 110	1 660

Dimensional drawing overview

Information about dimensional drawings can be found in chapter Introduction on page 1/21.

Design	Frame size	Dimensional drawing on page
Foot-mounted design		
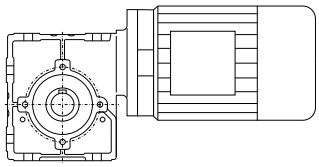	S.09	7/10
	S.19	7/14
	S.29	7/18
Flange-mounted design		
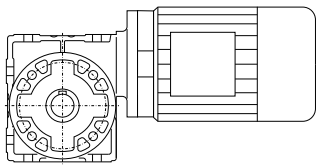	S.F09	7/11
	S.F19	7/15
	S.F29	7/19
Housing flange design		
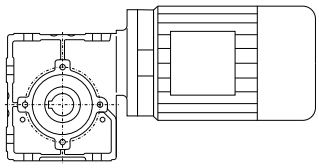	S.Z09	7/12
	S.Z19	7/16
	S.Z29	7/20
Shaft-mounted design		
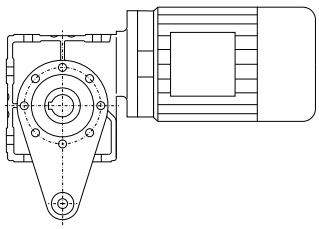	SAD09	7/13
	SAD19	7/17
	SAD29	7/21
Additional versions and options		
	Protection cover for hollow shafts	7/22

© Siemens AG 2017

S.09 gearbox in a foot-mounted design

S030, SA030, SE030

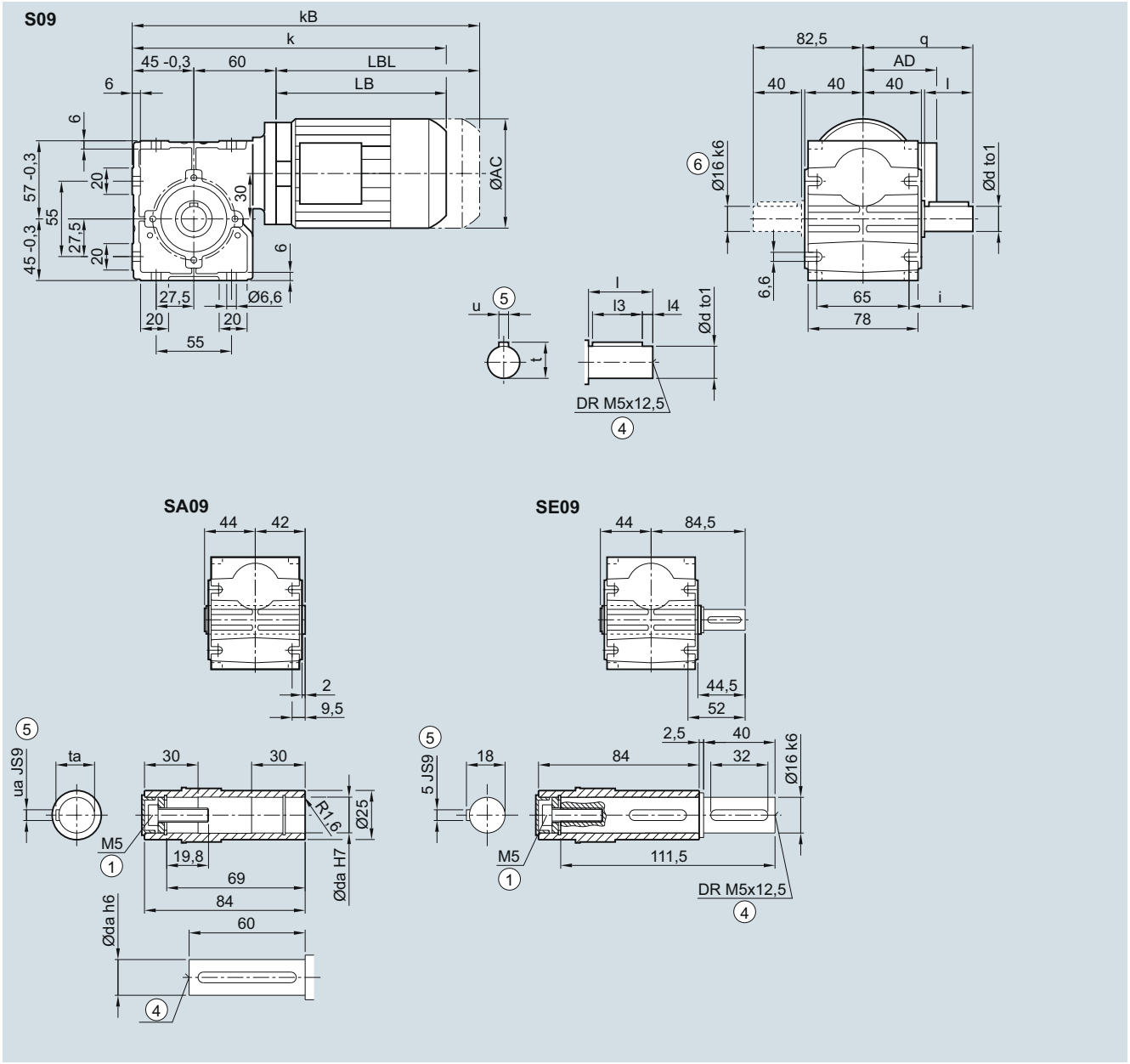

Solid shaft	d	to1	l	l3	l4	u	t	q	i
	14	k6	30	22	4	5	16	72.5	40
	16	k6	40	32	4	5	18	82.5	50

Hollow shaft	da	ua	ta
	14	5	16.3
	16	5	18.3

Motor	AC	AD [1]	k	kB	LB	LBL
LAI 63	118	101	284.5	335.5	179.5	230.5

① ISO 4014
④ DIN 332
⑤ Feather key/keyway DIN 6885-1
⑥ Solid shaft with 2nd shaft extension only d16
[1] AD depends on the motor options, for other dimensions, see page 8/42.

© Siemens AG 2017

S.F09 gearbox in a flange-mounted design

SF030, SAF030, SEF030

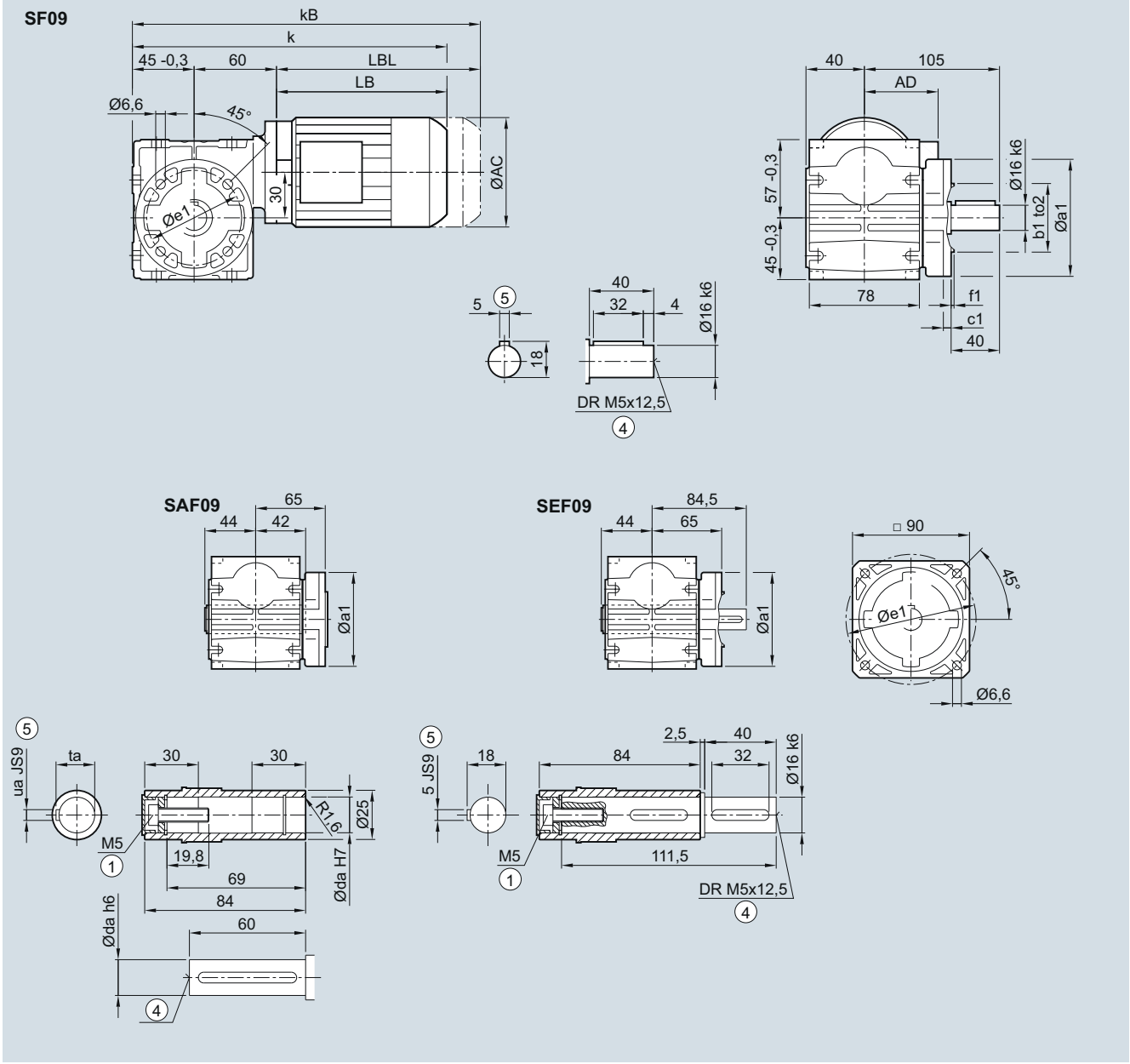

Hollow shaft	da	ua	ta
	14	5	16.3
	16	5	18.3

Flange	a1	e1	b_1	to2	c1	f_1
	80	65	50	j6	7	2.5
	120	100	80	j6	7	3.0

Motor	AC	AD [1]	k	kB	LB	LBL
LAI 63	118	101	284.5	335.5	179.5	230.5

① ISO 4014 ④ DIN 332 ⑤ Feather key/keyway DIN 6885-1

[1] AD depends on the motor options, for other dimensions, see page 8/42.

© Siemens AG 2017

S.Z09 gearbox in a housing flange design

SZ030, SAZ030, SEZ030

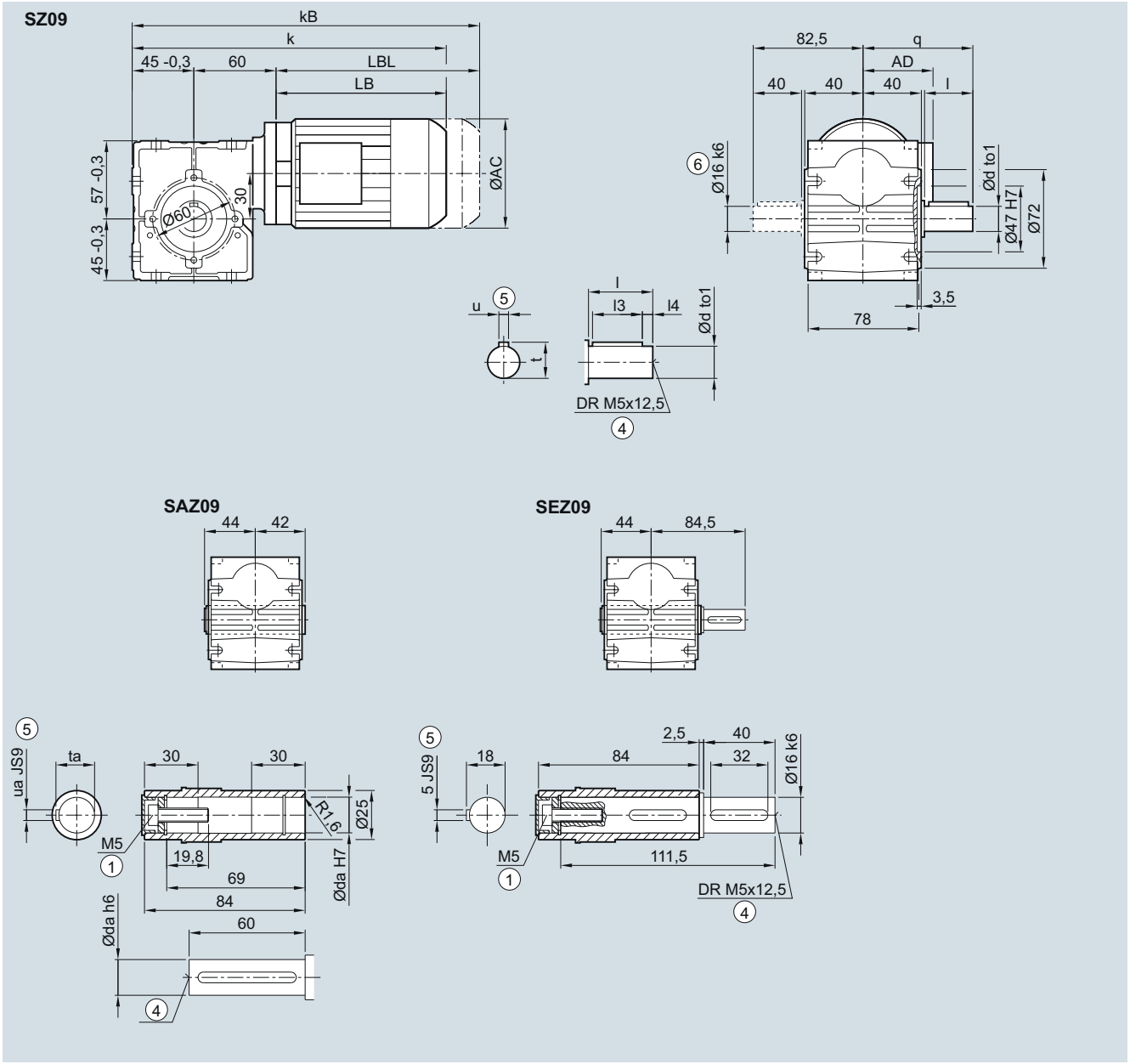

Solid shaft	d	to1	l	l3	l4	u	t	q
	14	k6	30	22	4	5	16	72.5
	16	k6	40	32	4	5	18	82.5

Hollow shaft	da	ua	ta
	14	5	16.3
	16	5	18.3

Motor	AC	AD [1]	k	kB	LB	LBL
LAI 63	118	101	284.5	335.5	179.5	230.5

① ISO 4014
④ DIN 332
⑤ Feather key/keyway DIN 6885-1
⑥ Solid shaft with 2nd shaft extension only d16
[1] AD depends on the motor options, for other dimensions, see page 8/42.

© Siemens AG 2017

SAD09 gearbox in a shaft-mounted design

SAD030

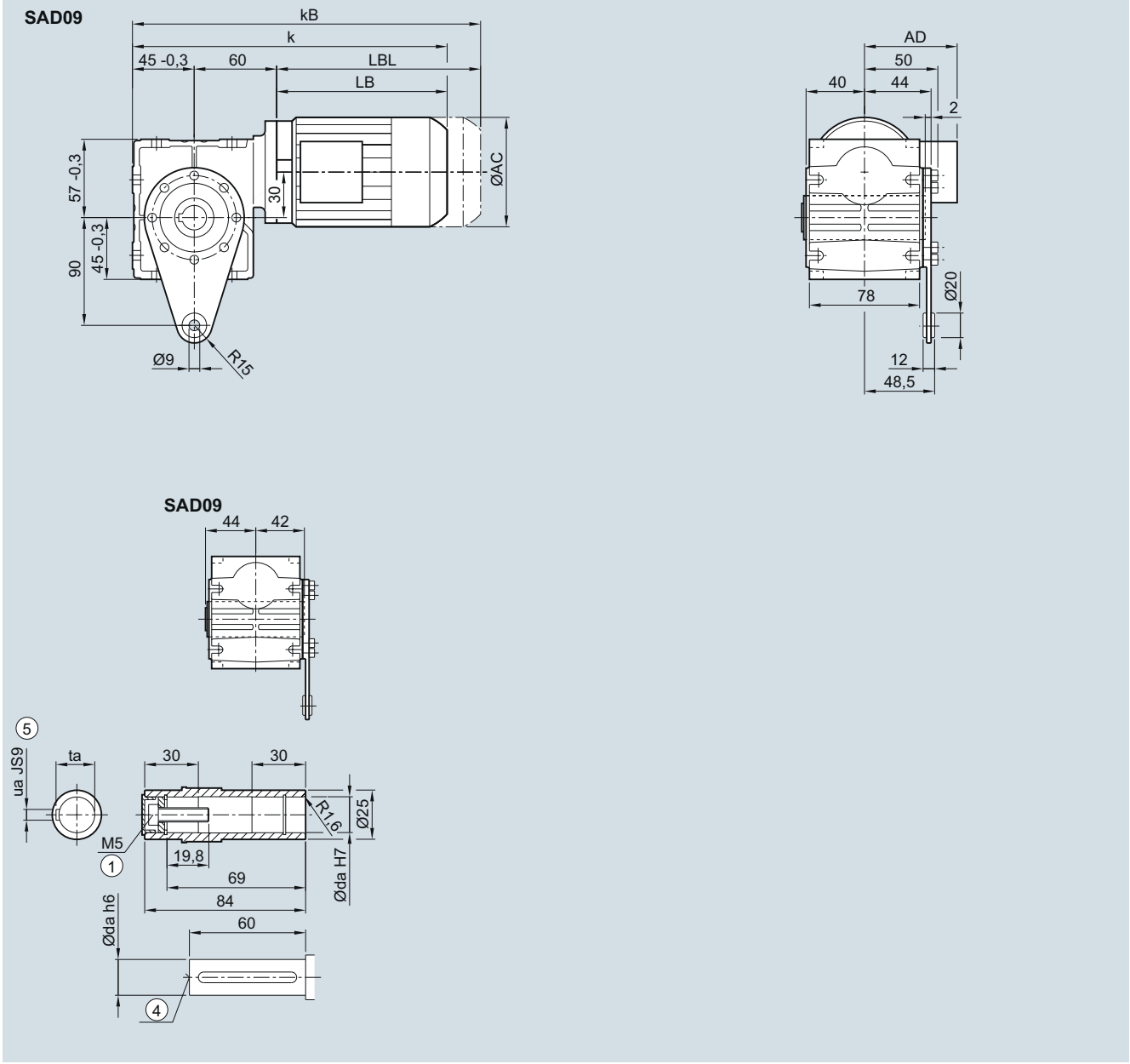

Hollow shaft	da	ua	ta
	14	5	16.3
	16	5	18.3

Motor	AC	AD [1]	k	kB	LB	LBL
LAI 63	118	101	284.5	335.5	179.5	230.5

① ISO 4014 ④ DIN 332 ⑤ Feather key/keyway DIN 6885-1

[1] AD depends on the motor options, for other dimensions, see page 8/42.

© Siemens AG 2017

S.19 gearbox in a foot-mounted design

S030, SA030, SE030

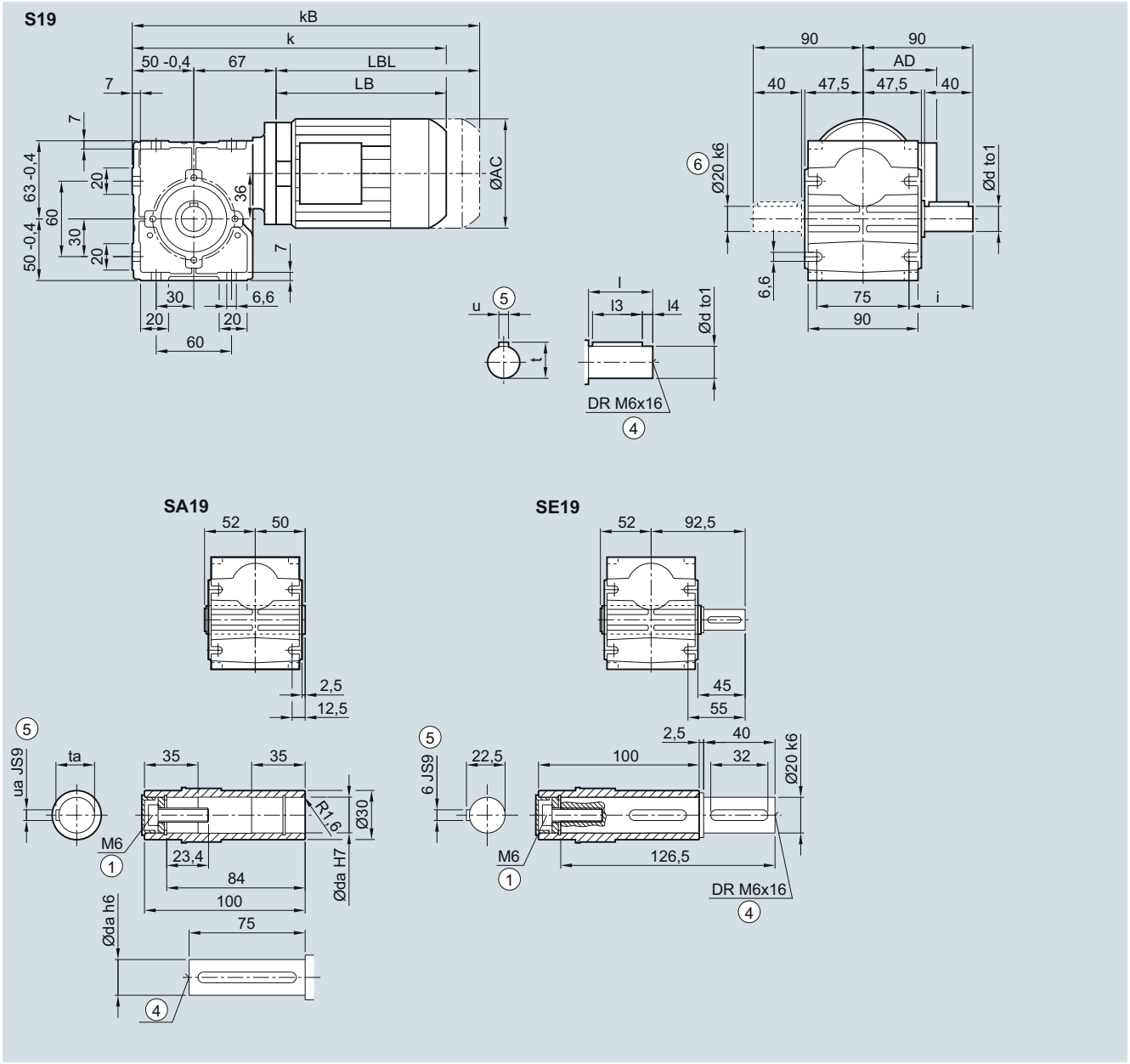

Solid shaft	d	to1	l	l3	l4	i	u	t	Hollow shaft	da	ua	ta
	18	k6	40	32	4	52.5	6	20.5		18	6	20.8
	20	k6	40	32	4	52.5	6	22.5		20	6	22.8

Motor	AC	AD [1]	k	kB	LB	LBL
LAI 63	118	101	296.5	347.5	179.5	230.5
LAI 71	139	111	327.0	378.5	210	261.5

① ISO 4014
④ DIN 332
⑤ Feather key/keyway DIN 6885-1
⑥ Solid shaft with 2nd shaft extension only d20
[1] AD depends on the motor options, for other dimensions, see page 8/42.

© Siemens AG 2017

S.F19 gearbox in a flange-mounted design

SF030, SAF030, SEF030

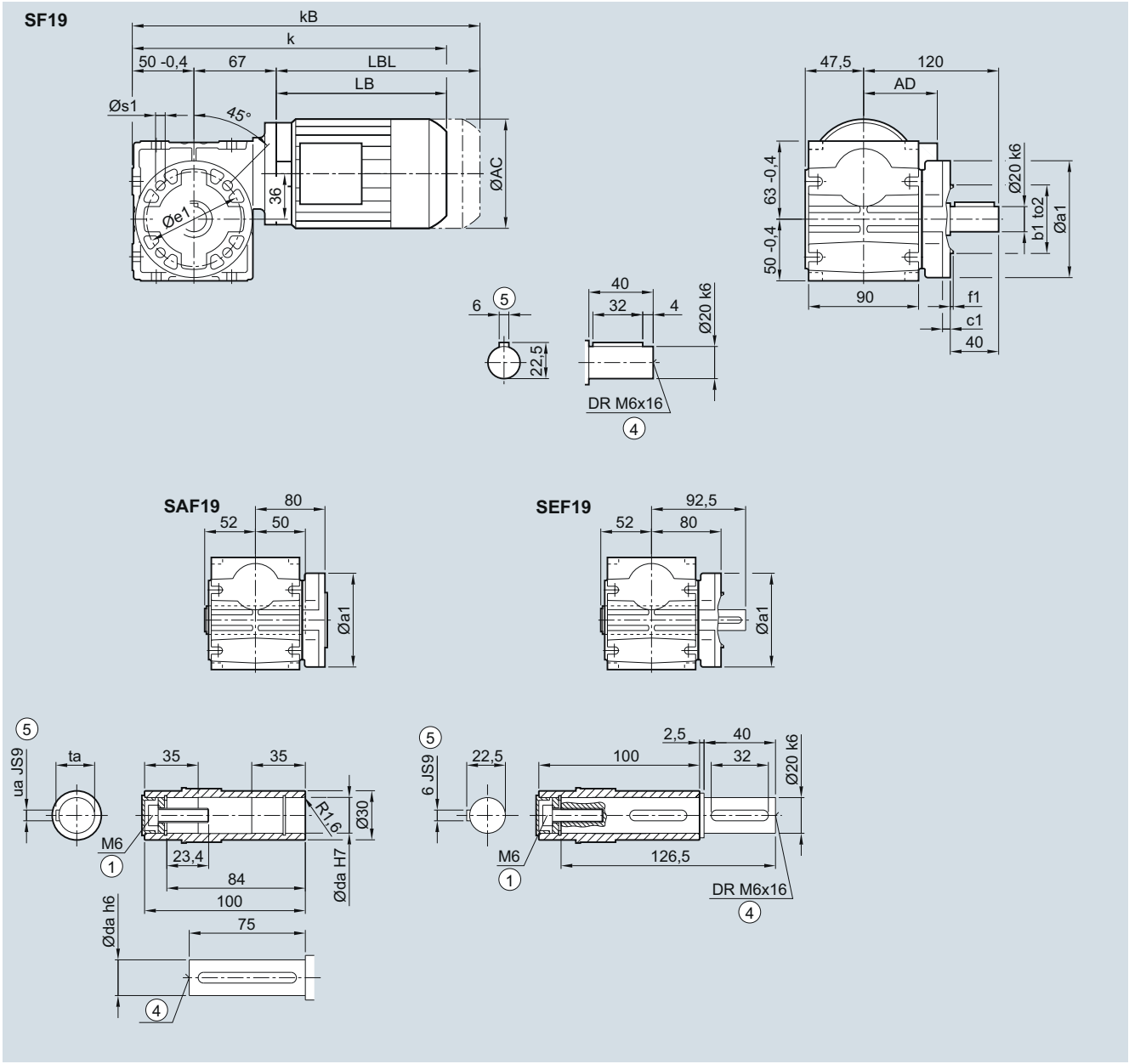

Hollow shaft	da	ua	ta
	18	6	20.8
	20	6	22.8

Flange	a1	e1	b_1	to2	c1	f_1	s1
	110	87	60	H8	8	4.0	9
	120	100	80	j6	8	3.0	6.6

Motor	AC	AD [1]	k	kB	LB	LBL
LAI 63	118	101	296.5	347.5	179.5	230.5
LAI 71	139	111	327.0	378.5	210	261.5

① ISO 4014 ④ DIN 332 ⑤ Feather key/keyway DIN 6885-1

[1] AD depends on the motor options, for other dimensions, see page 8/42.

© Siemens AG 2017

S.Z19 gearbox in a housing flange design

SZ030, SAZ030, SEZ030

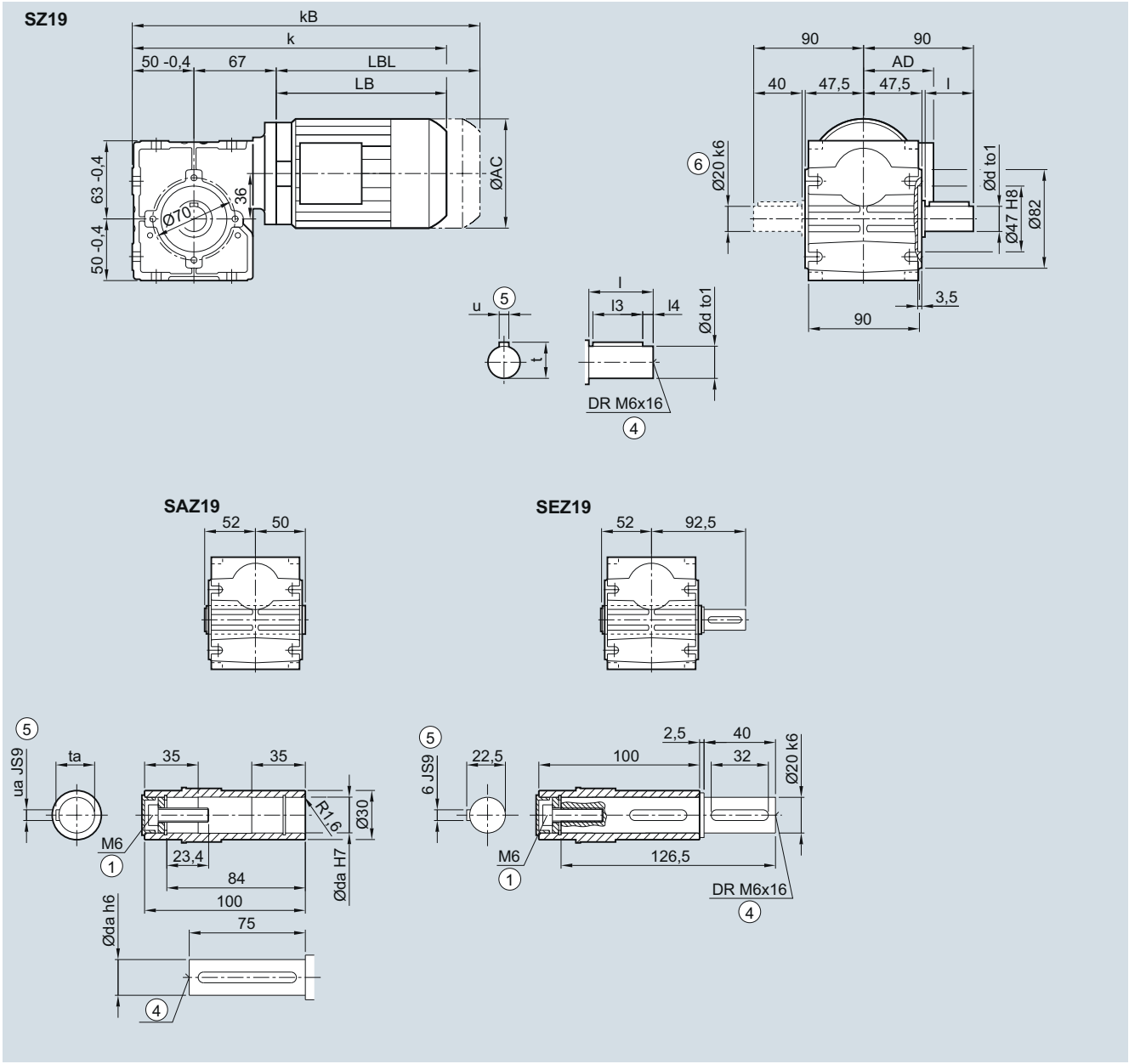

Solid shaft	d	to1	l	l3	l4	u	t	Hollow shaft	da	ua	ta
	18	k6	40	31	4	6	20.5		18	6	20.8
	20	k6	40	32	4	6	22.5		20	6	22.8

Motor	AC	AD [1]	k	kB	LB	LBL
LAI 63	118	101	296.5	347.5	179.5	230.5
LAI 71	139	111	327.0	378.5	210	261.5

① ISO 4014
④ DIN 332
⑤ Feather key/keyway DIN 6885-1
⑥ Solid shaft with 2nd shaft extension only d20
[1] AD depends on the motor options, for other dimensions, see page 8/42.

© Siemens AG 2017

SAD19 gearbox in a shaft-mounted design

SAD030

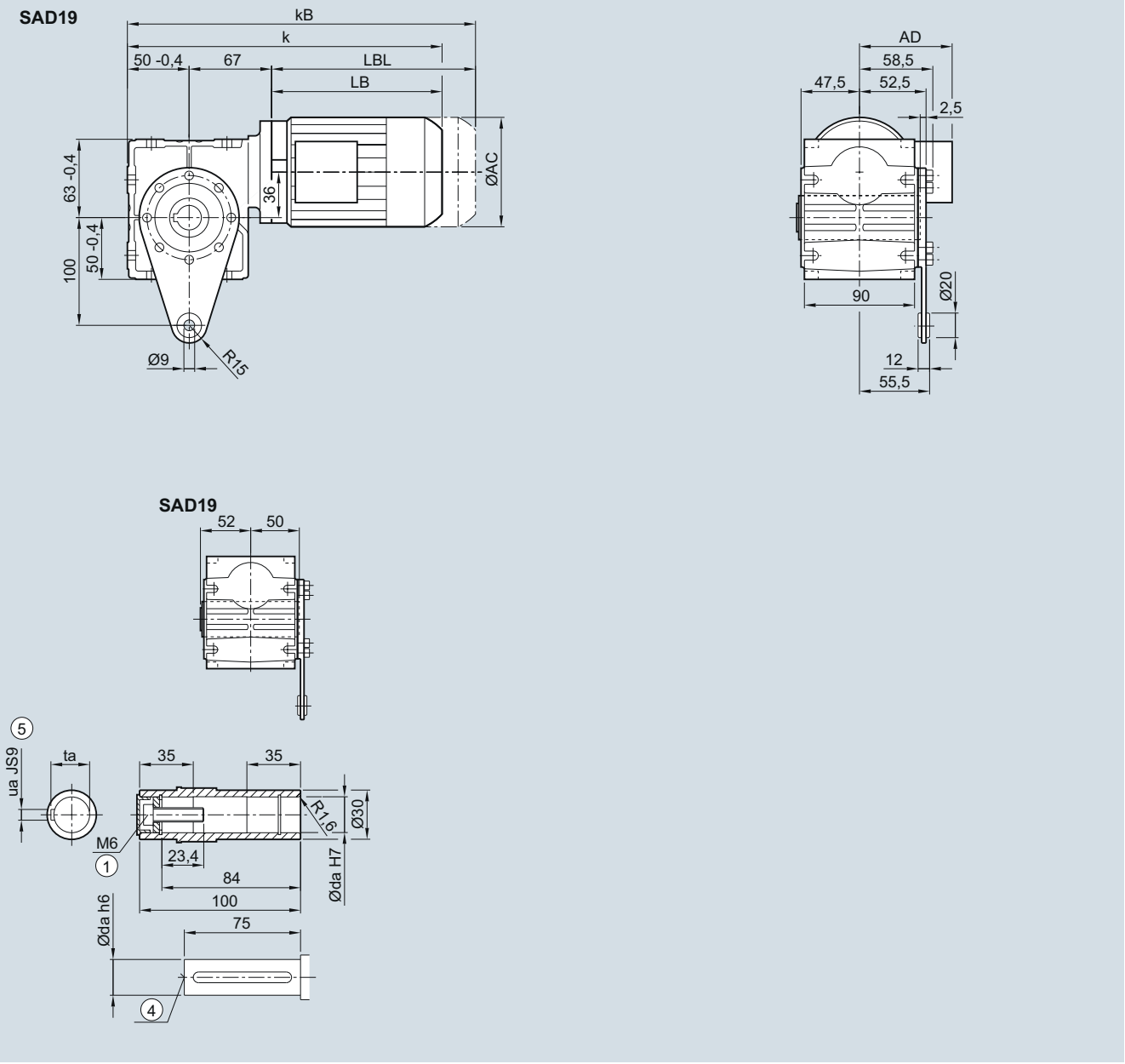

Hollow shaft	da	ua	ta
	18	6	20.8
	20	6	22.8

Motor	AC	AD [1]	k	kB	LB	LBL
LAI 63	118	101	296.5	347.5	179.5	230.5
LAI 71	139	111	327.0	378.5	210.0	261.5

① ISO 4014 ④ DIN 332 ⑤ Feather key/keyway DIN 6885-1

[1] AD depends on the motor options, for other dimensions, see page 8/42.

© Siemens AG 2017

S.29 gearbox in a foot-mounted design

S030, SA030, SE030

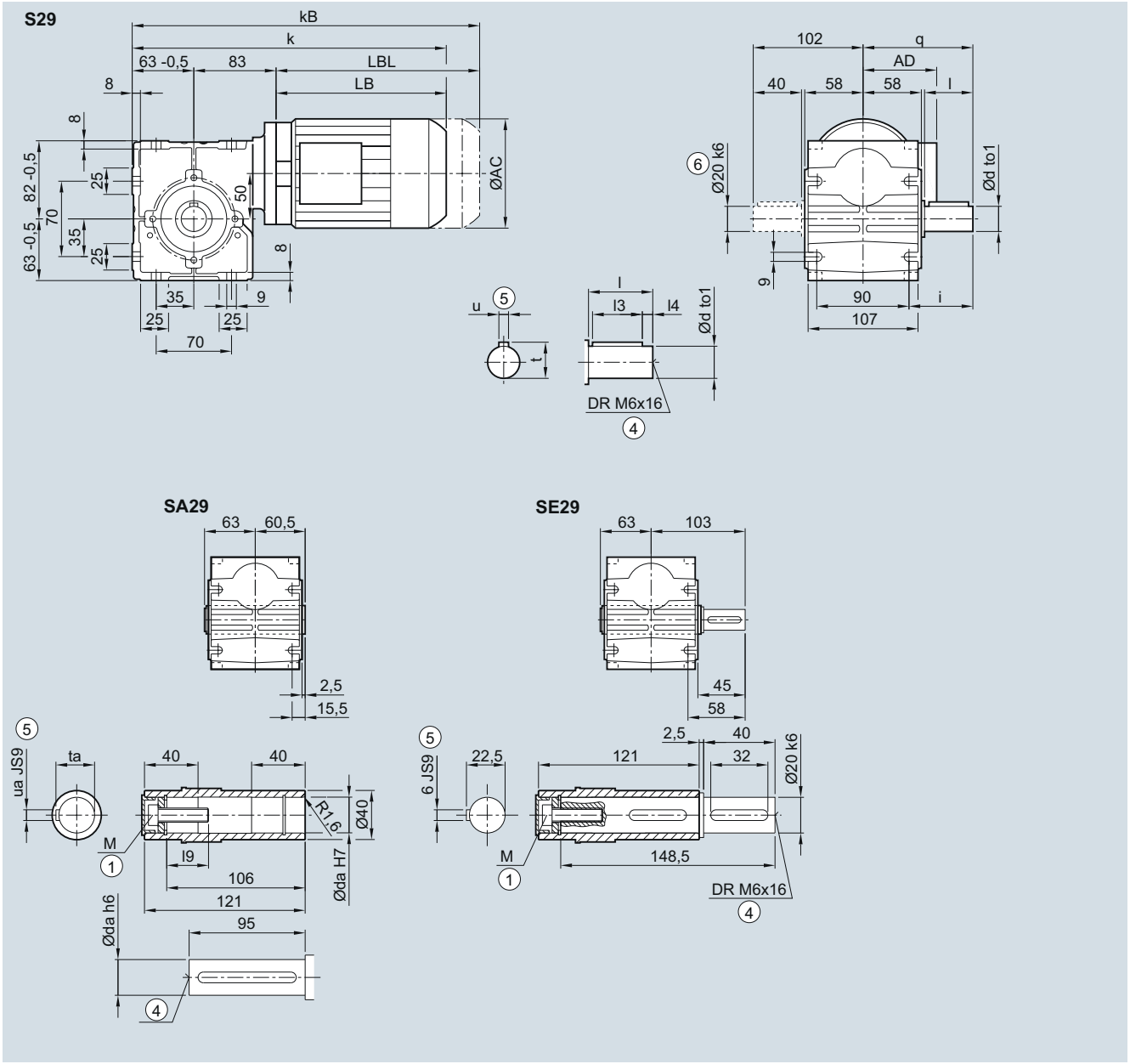

Solid shaft	d	to1	l	l3	l4	u	t	q	i
	20	k6	40	32	4	6	22.5	102	57
	25	k6	50	40	5	8	28.0	112	67

Hollow shaft	da	ua	ta	l9	M
	20	6	22.8	23.4	M6
	25	8	28.3	32.6	M10

Motor	AC	AD [1]	k	kB	LB	LBL
LAI 63	118	101	325.5	376.5	179.5	230.5
LAI 71	139	111	356.5	407.5	210.5	261.5

① ISO 4014
④ DIN 332
⑤ Feather key/keyway DIN 6885-1
⑥ Solid shaft with 2nd shaft extension only d20
[1] AD depends on the motor options, for other dimensions, see page 8/42.

© Siemens AG 2017

S.F29 gearbox in a flange-mounted design

SF030, SAF030, SEF030

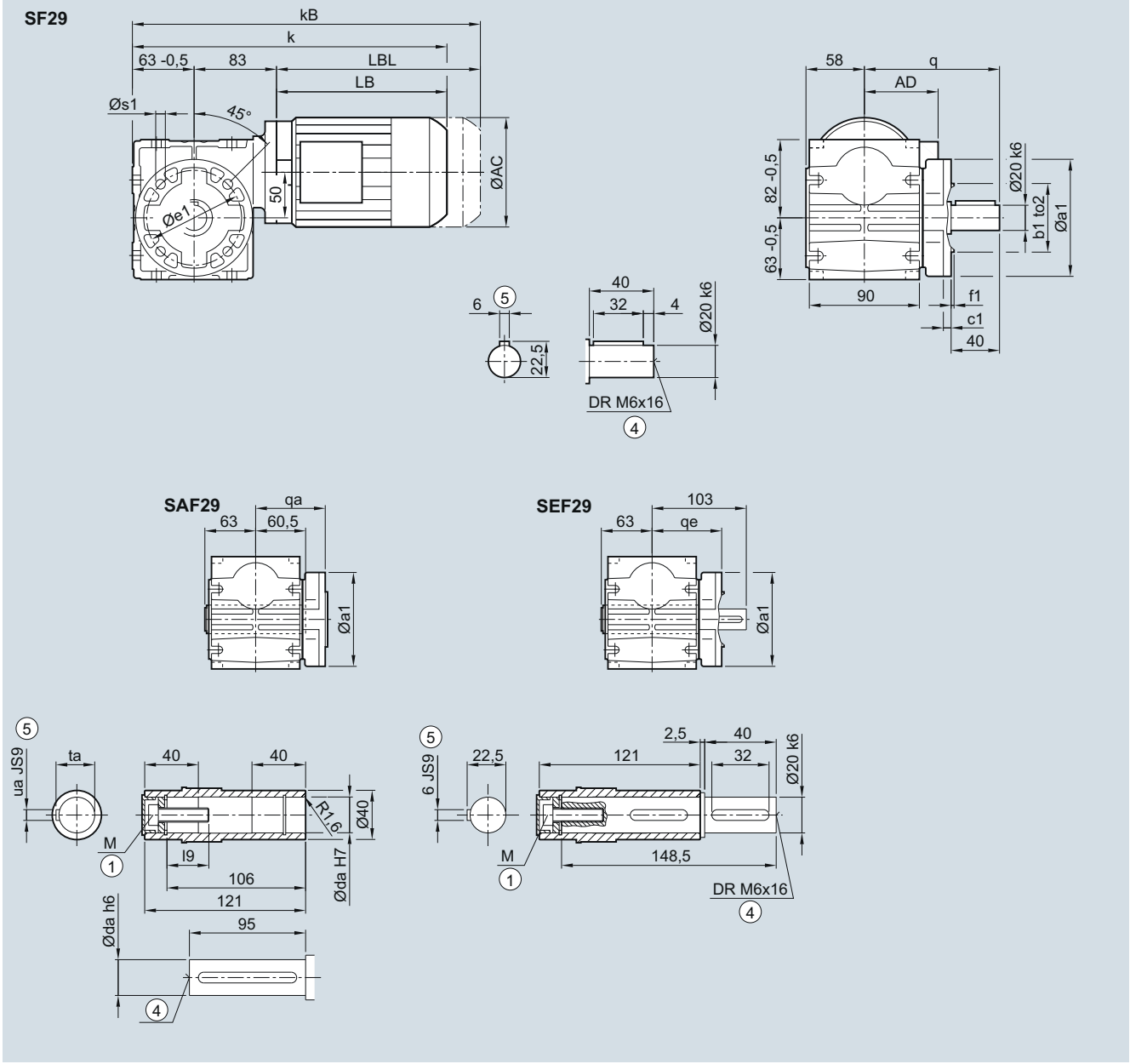

Hollow shaft	da	ua	ta	l9	M
	20	6	22.8	23.4	M6
	25	8	28.3	32.6	M10

Flange	a1	e1	b_1	to2	c1	f_1	s1	q	qa / qe
	120	100	80	j6	8	3.0	6.6	120	80
	160	130	110	j6	8	3.5	9.0	135	85

Motor	AC	AD [1]	k	kB	LB	LBL
LAI 63	118	101	325.5	376.5	179.5	230.5
LAI 71	139	111	356.5	407.5	210.5	261.5

① ISO 4014 ④ DIN 332 ⑤ Feather key/keyway DIN 6885-1

[1] AD depends on the motor options, for other dimensions, see page 8/42.

© Siemens AG 2017

S.Z29 gearbox in a housing flange design

SZ030, SAZ030, SEZ030

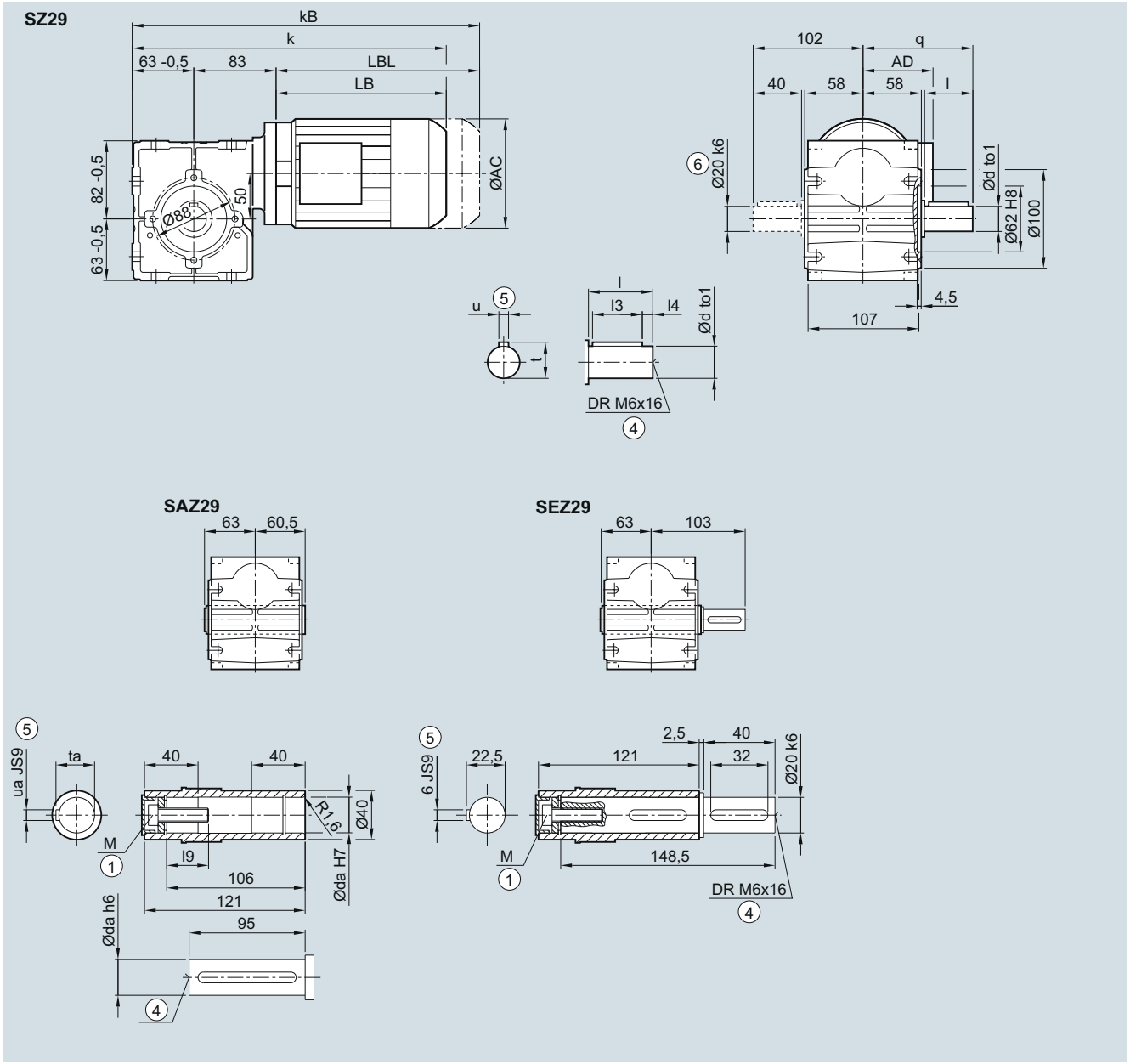

Solid shaft	d	to1	l	l3	l4	u	t	q
	20	k6	40	32	4	6	22.5	102
	25	k6	50	40	5	8	28.0	112

Hollow shaft	da	ua	ta	l9	M
	20	6	22.8	23.4	M6
	25	8	28.3	32.6	M10

Motor	AC	AD [1]	k	kB	LB	LBL
LAI 63	118	101	325.5	376.5	179.5	230.5
LAI 71	139	111	356.5	407.5	210.5	261.5

① ISO 4014
④ DIN 332
⑤ Feather key/keyway DIN 6885-1
⑥ Solid shaft with 2nd shaft extension only d20
[1] AD depends on the motor options, for other dimensions, see page 8/42.

© Siemens AG 2017

SAD29 gearbox in a shaft-mounted design

SAD030

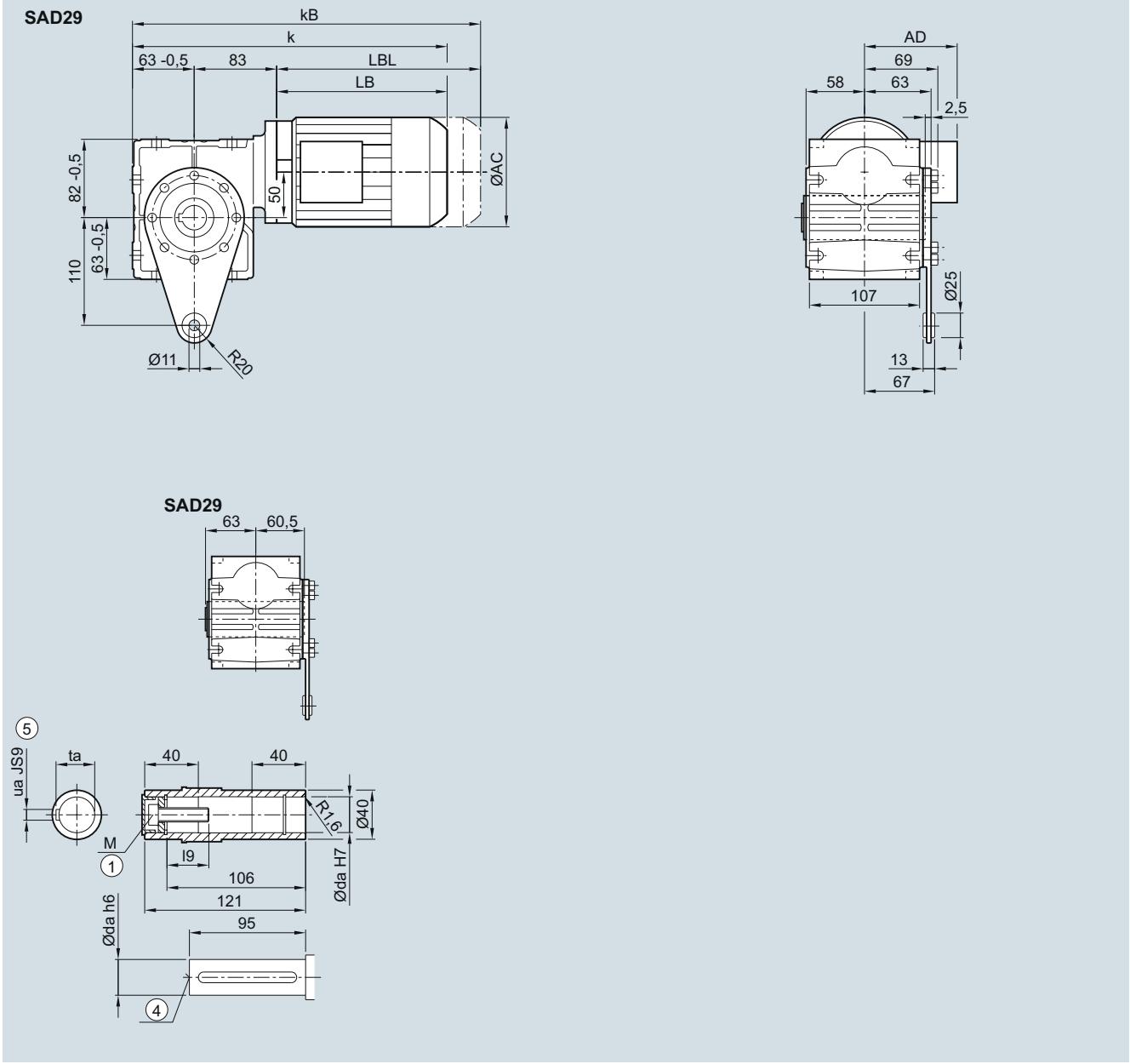

Hollow shaft	da	ua	ta	l9	M
	20	6	22.8	23.4	M6
	25	8	28.3	32.6	M10

Motor	AC	AD [1]	k	kB	LB	LBL
LAI 63	118	101	325.5	376.5	179.5	230.5
LAI 71	139	111	356.5	407.5	210.5	261.5

① ISO 4014 ④ DIN 332 ⑤ Feather key/keyway DIN 6885-1

[1] AD depends on the motor options, for other dimensions, see page 8/42.

© Siemens AG 2017

Protection cover for hollow shaft

SA, SAZ, SAF, SE, SEZ

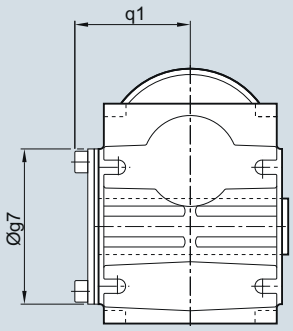

Gearbox type	S.09	S.19	S.29
Protection cover			
g7	72	82	100
q1	51	59.5	70

© Siemens AG 2017



8/2 Orientation
8/2 The MODULOG modular principle
8/3 Technical specifications at a glance
8/5 EMC measures

8/6 Motors with Standard Efficiency IE1
Selection and ordering data
8/6 • 4/2/6/8-pole at 50 Hz
8/8 • 4/2/6/8-pole at 60 Hz, 50 Hz power
8/10 • 4/2/6/8-pole at 60 Hz, 60 Hz power
8/12 • 4/6/8-pole at 87 Hz

8/14 Motors with High Efficiency IE2
Selection and ordering data
8/14 • 4/2/6/8-pole at 50 Hz
8/16 • 4/2/6/8-pole at 60 Hz, 50 Hz power
8/18 • 4/2/6/8-pole at 60 Hz, 60 Hz power
8/20 • 4/6/8-pole at 87 Hz

8/22 Motors with Premium Efficiency IE3
Selection and ordering data
8/22 • 4/2/6-pole at 50 Hz
8/24 • 4/2/6-pole at 60 Hz, 50 Hz power
8/26 • 4/2/6-pole at 60 Hz, 60 Hz power
8/28 • 4/6-pole at 87 Hz

8/30 NEMA Premium Efficient motors MG1, Table 12-12
Selection and ordering data
8/30 • 4/2/6-pole at 60 Hz, 50 Hz power
8/34 • 4/2/6-pole at 60 Hz, 60 Hz power

8/36 Dimensions
8/36 Motors
8/42 Motors for worm gearbox S
Additional lengths
8/43 Second shaft extension, handwheel and canopy
8/44 Encoder
8/45 Prepared for encoder mounting
8/46 Separately driven fan, encoder and canopy
8/47 Application terminal box
8/48 HAN 10E motor plug
8/50 K4/4 motor plug
8/52 HAN Q8 and HAN Q12 motor plugs

© Siemens AG 2017

Overview

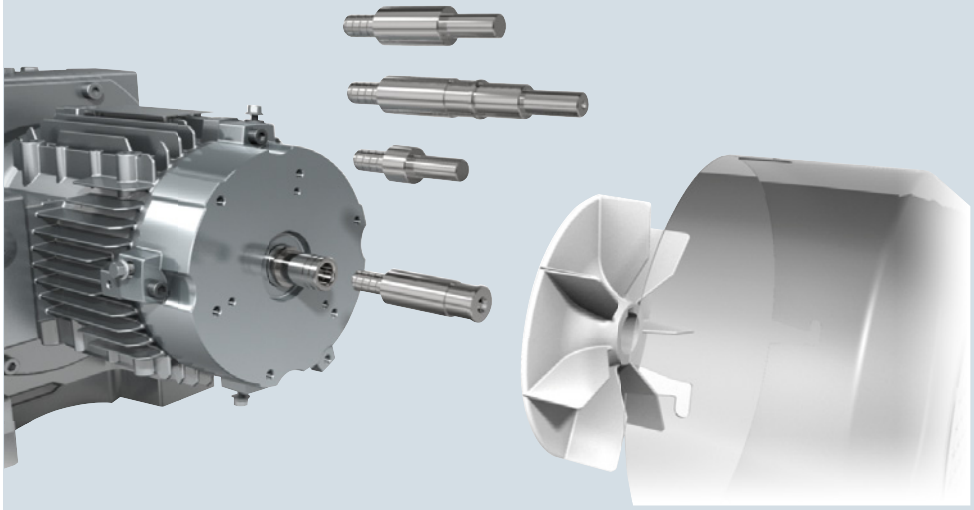

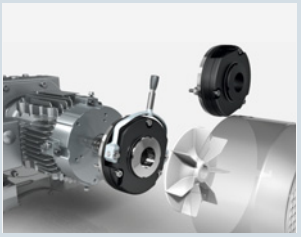

Brake motor

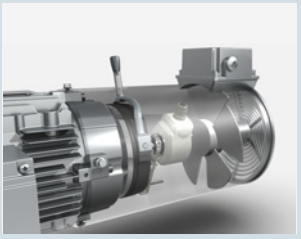

Motor with forced ventilation

G_D087_EN_00158

The modular MODULOG principle has a range of benefits for machine and plant designers.

The name MODULOG stands for a clear and transparent **modu**lar motor system with an optimum **log**istical structure. It enables users to assemble powerful, durable, and extremely easy-to-service motors from just a few standard components to create a customized motor system for most applications.

At the heart of the system is a basic motor dimensioned for international line supply conditions with an individually configurable MODULOG modular system at the non-drive end (NDE) of the motor.

Functional expansions, such as brakes, backstops, rotary encoders, separately driven fan, canopy, etc. can be combined almost arbitrarily as "additional functional components".

© Siemens AG 2017

Overview

The motors comply with all applicable international (IEC), European (EN, CENELEC), and national (DIN/VDE) standards:

Motor type	Three-phase induction motors with squirrel cage rotor
Connection types	You can establish the connection type that can be used from the product number suffixes in the selection and ordering data for the required motor.
Number of poles	2, 4, 6, 8
Rated speed (synchronous speed)	750 … 3 600 rpm
Rated power (50 Hz)	0.09 … 55 kW (4-pole)
Rated torque	0.85 … 355 Nm (4-pole)
Stator winding insulation	Temperature class 155 (F) Utilization according to temperature class 130 (B) Optionally temperature class 180 (H)
Degree of protection acc. to IEC 60034-5 (EN 60034-5)	IP55 Optional IP65, IP56
Cooling acc. to IEC 60034-6 (EN 60034-6)	Self-cooled (IC 411) Optionally, force ventilated (IC 416)
Coolant temperature	-20 … +40 °C
Installation altitude	Up to 1 000 m above sea level
Rated voltage	200 … 690 V You can establish the voltage that can be used from the selection and ordering data for the required motor.
Rated frequency	50 Hz, 60 Hz, 87 Hz
Vibration severity acc. to IEC 60034-14 (EN 60034-14)	Vibration severity A
Balancing type	Half-key balancing
Sound pressure level, sound power level acc. to IEC 60034-9 (EN 60034-9)	You can establish the corresponding sound pressure level and sound power level from the selection and ordering data for the required motor.
Weight	You can establish the corresponding weight from the selection and ordering data for the required motor.
Rating plates	See "Rating plate" in the Chapter "General options"
Connection and terminal boxes	See "Connection, circuit and terminal boxes" in the Chapter "Motor options"

© Siemens AG 2017

Technical specifications

Overview

The geared motors comply with all of the applicable IEC/EN standards.

IEC	EN/HD	DIN/VDE	Title
IEC 60027-4	EN 60027-4	EN 60027-4	Formula symbols for electrical engineering Part 4: Rotating electrical machines
IEC 60034-1	EN 60034-1	EN 60034-1 (VDE 0530-1)	Rotating electrical machines: - Rating and performance
IEC 60034-2-1	EN 60034-2-1	EN 60034-2-1 (VDE 0530-2-1)	- Standard technique to determine the losses and efficiency based on testing (with the exception for machines for track and road vehicles) (IEC 60034-2-1:2007); German Edition EN 60034-2-1:2007
IEC 60034-5	EN 60034-5	EN 60034-5 (VDE 0530-5)	- Degrees of protection provided by integral design of rotating electrical machines (IP code) - Classification
IEC 60034-6	EN 60034-6	EN 60034-6 (VDE 0530-6)	- Classification of cooling methods (IC Code)
IEC 60034-7	EN 60034-7	EN 60034-7 (VDE 0530-7)	- Classification of types of construction, mounting types and terminal box position (IM code)
IEC 60034-8	EN 60034-8	EN 60034-8 (VDE 0530-8)	- Terminal markings and direction of rotation
IEC 60034-9	EN 60034-9	EN 60034-9 (VDE 0530-9)	- Noise limits
IEC 60034-11	EN 60034-11	EN 60034-11 (VDE 0530-11)	- Built-in thermal protection
IEC 60034-12	EN 60034-12	EN 60034-12 (VDE 0530-12)	- Starting behavior of three-phase squirrel cage induction motors, with the exception of pole-changing motors
IEC 60034-14	EN 60034-14	EN 60034-14 (VDE 0530-14)	- Mechanical vibration of certain machines with shaft heights 56 mm and higher
IEC 60034-30	EN 60034-30	EN 60034-30 (VDE 0530-30)	- International efficiency classes for rotating electrical machines (IE code)
IEC/TS 60034-17	-	DIN VDE 0530-17 (VDE 0530-17)	- Inverter-fed squirrel-cage induction motors – Application guide
IEC 60038	HD 472	EN 60038	IEC standard voltages
-	EN 50347	EN 50347	Three-phase induction motors for general applications with standardized dimensions and power ratings – frame sizes 56 up to 315 and flange sizes 65 up to 740
IEC 60085	EN 60085	EN 60085 (VDE 0301-1)	Electrical insulation, thermal evaluation + designation
IEC 60445	EN 60445	EN 60445 (VDE 0197)	Identification of equipment terminals, conductor terminations and conductors
IEC 60529	EN 60529	EN 60529 (VDE 0470-1)	Degrees of protection provided by the enclosure (IP code)
-		EN 62444 (VDE 0619)	Cable glands for electrical installation
-	-	DIN 42925	Terminal box cable entries for three-phase squirrel cage induction motors at rated voltages from 400 V to 690 V

Tolerances

According to EN 60034, the following tolerances are permitted: Motors which comply with EN 60034-1 must have a voltage tolerance of ± 5 %/frequency tolerance of ± 2 % (Zone A). If utilized, the admissible limit temperature of the temperature class may be exceeded by 10 K.

Description	Tolerance
Efficiency	$P_{rated} \leq 150$ kW: - 0.15 (1 - η) $P_{rated} > 150$ kW: - 0.1 (1 - η)
Power factor	$\frac{1 - \cos\varphi}{6}$ (minimum 0.02/maximum 0.07)

Description	Tolerance
Slip at full load and operating temperature	± 20 % of the setpoint slip for $P_{rated} \geq 1$ kW ± 30 % of the setpoint slip for $P_{rated} < 1$ kW
Starting torque	-15 % and +25 %
Breakdown torque	-10 % without upper limit
Starting current	+20 % without lower limit
Moment of inertia	± 10 %

© Siemens AG 2017

Efficiency and power factor

The efficiency η and power factor cos φ for each rated power are listed in the selection tables in the individual sections of this catalog.

For motors with Standard Efficiency (IE1), High Efficiency (IE2) and Premium Efficiency (IE3), the 3/4 load efficiency is also listed in the selection tables. The part-load values stated in the tables below are averages; precise values can be provided on request.

Partial-load power factor cos φ

4/4 of full load	1/4	1/2	3/4	5/4
0.92	0.70	0.86	0.90	0.92
0.91	0.65	0.85	0.89	0.91
0.90	0.63	0.83	0.88	0.90
0.89	0.61	0.80	0.86	0.89
0.88	0.57	0.78	0.85	0.88
0.87	0.53	0.76	0.84	0.87
0.86	0.51	0.75	0.83	0.86
0.85	0.49	0.73	0.81	0.86
0.84	0.47	0.71	0.80	0.85
0.83	0.45	0.69	0.79	0.84
0.82	0.43	0.67	0.77	0.83
0.81	0.41	0.66	0.76	0.82
0.80	0.40	0.65	0.75	0.81
0.79	0.38	0.63	0.74	0.80
0.78	0.36	0.61	0.72	0.80
0.77	0.34	0.59	0.71	0.79
0.76	0.32	0.58	0.70	0.78
0.75	0.30	0.56	0.69	0.78
0.74	0.29	0.55	0.68	0.77
0.73	0.28	0.54	0.67	0.77
0.72	0.27	0.52	0.63	0.76
0.71	0.26	0.50	0.62	0.76

Partial-load efficiency η in %

4/4 of full load	1/4	1/2	3/4	5/4
97	93	96.0	97.0	96.5
96	92	95.0	96.0	95.5
95	90	93.5	95.0	94.5
94	89	92.5	94.0	93.5
93	88	91.5	93.0	92.5
92	87	91.0	92.0	91.5
91	86	90.0	91.0	90.0
90	85	89.0	90.0	89.0
89	84	88.0	89.0	88.0
88	80	87.0	88.0	87.0
87	79	86.0	87.0	86.0
86	78	85.0	86.0	85.0
85	76	84.0	85.0	83.5
84	74	83.0	84.0	82.5
83	72	82.0	83.0	81.5
82	70	81.0	82.0	80.5
81	68	80.0	81.0	79.5
80	66	79.0	80.0	78.5
79	64	77.0	79.5	77.5
78	62	75.5	78.5	76.5
77	60	74.0	77.5	75.0
76	58	73.0	76.0	74.0
75	56	72.0	75.0	73.0
74	55	71.0	74.0	72.0
73	54	70.0	73.0	71.0
72	53	68.0	72.0	70.0
71	52	67.0	71.0	69.0
70	51	66.0	70.0	68.0
69	50	65.0	69.0	67.0
68	49	64.0	67.5	66.0
67	48	62.0	66.5	65.0
66	47	61.0	65.0	64.0
65	46	60.0	64.0	63.0
64	45	59.0	63.0	62.0
63	44	57.0	62.0	61.0
62	43	56.0	60.5	60.5
61	42	55.0	59.5	59.5
60	41	54.0	58.5	58.5

EMC measures

SIMOGEAR geared motors are designed as components for installation in systems and machines. The manufacturer of the system or machine is responsible for ensuring compliance with EMC Directive 2014/30/EU.

LA and LE motors when correctly used in continuous operation connected to the line supply fulfill standards EMC EN 50081 and EN 50082.

© Siemens AG 2017

Selection and ordering data

Frame size	Motor	P_{rated}	n_{rated}	T_{rated}	I_{rated}	cos φ	η		Efficiency class	I_{St}/I_{rated}	Article No.				Order code
					400 V		4/4 load	3/4 load	acc. to IEC		Data position				No. poles
		kW	rpm	Nm	A	-	%	%	60034-30	-	9th	10th	11th	12th	
4-pole, 1 500 rpm at 50 Hz															
63	LA63MD4	0.09	1 400	0.61	0.42	0.61	51.30	45.80	-	2.90	**B**	**B**	**1**	**1**	**-**
	LA63ME4 [1]	0.12	1 350	0.85	0.42	0.75	53.60	52.10	-	2.80	**B**	**C**	**1**	**1**	**-**
	LA63MF4 [1]	0.18	1 350	1.27	0.58	0.76	58.30	56.80	-	3.00	**B**	**D**	**1**	**1**	**-**
71	LA71MG4 [1]	0.25	1 350	1.77	0.77	0.78	61.90	60.40	-	3.00	**C**	**D**	**1**	**1**	**-**
	LA71MH4 [1]	0.37	1 370	2.58	1.06	0.78	65.80	64.80	-	3.30	**C**	**E**	**1**	**1**	**-**
	LA71ZML4	0.55	1 370	3.83	1.54	0.73	70.00	69.00	-	3.70	**C**	**H**	**1**	**1**	**-**
80	LE80MB4	0.55	1 440	3.65	1.64	0.69	70.00	68.40	-	4.60	**D**	**B**	**2**	**1**	**-**
	LE80MF4 [2]	0.75	1 430	5.01	2.00	0.75	72.10	72.00	IE1	4.70	**D**	**D**	**2**	**1**	**-**
90	LE90SE4 [2]	1.10	1 425	7.37	2.80	0.76	75.00	75.40	IE1	5.00	**E**	**L**	**2**	**1**	**-**
	LE90LD4 [2]	1.50	1 420	10.1	3.70	0.76	77.20	77.40	IE1	4.90	**E**	**N**	**2**	**1**	**-**
100	LE100LB4 [2]	2.20	1 425	14.7	4.90	0.81	79.70	80.50	IE1	5.10	**F**	**L**	**2**	**1**	**-**
	LE100LH4 [2]	3.00	1 425	20.1	6.30	0.85	81.50	83.00	IE1	5.40	**F**	**N**	**2**	**1**	**-**
112	LE112ME4 [2]	4.00	1 435	26.6	8.20	0.85	83.10	84.50	IE1	5.30	**G**	**H**	**2**	**1**	**-**
132	LE132SF4 [2]	5.50	1 450	36.2	11.20	0.82	84.70	85.70	IE1	5.70	**H**	**F**	**2**	**1**	**-**
	LE132ME4 [2]	7.50	1 450	49.4	15.20	0.82	86.00	86.90	IE1	6.60	**H**	**J**	**2**	**1**	**-**
	LE132ZMSA4 [2]	9.20	1 450	60.6	18.00	0.84	87.60	O. R.	IE1	7.40	**H**	**V**	**2**	**1**	**-**
160	LE160MD4 [2]	11.00	1 460	71.9	22.00	0.82	87.60	88.00	IE1	6.40	**J**	**P**	**2**	**1**	**-**
	LE160LA4 [2]	15.00	1 460	98.1	30.00	0.82	88.70	89.30	IE1	7.00	**J**	**S**	**2**	**1**	**-**
2-pole, 3 000 rpm at 50 Hz															
63	LA63ME2 [1]	0.18	2 820	0.61	0.51	0.79	62.00	60.50	-	3.70	**B**	**C**	**1**	**1**	**P00**
	LA63MF2 [1]	0.25	2 830	0.84	0.69	0.80	63.00	62.00	-	4.00	**B**	**D**	**1**	**1**	**P00**
71	LA71MG2 [1]	0.37	2 740	1.29	1.00	0.82	66.00	65.00	-	3.50	**C**	**D**	**1**	**1**	**P00**
	LA71MH2 [1]	0.55	2 800	1.88	1.36	0.82	71.00	71.00	-	4.30	**C**	**E**	**1**	**1**	**P00**
100	LE100LD2 [2]	3.00	2 835	10.1	6.10	0.87	81.50	82.80	IE1	6.20	**F**	**M**	**2**	**1**	**P00**
112	LE112MB2 [2]	4.00	2 930	13.0	8.10	0.86	83.10	83.80	IE1	7.30	**G**	**G**	**2**	**1**	**P00**
132	LE132SB2 [2]	5.50	2 905	18.1	10.60	0.89	84.70	85.70	IE1	5.60	**H**	**E**	**2**	**1**	**P00**
	LE132SF2 [2]	7.50	2 925	24.5	14.40	0.87	86.00	86.90	IE1	6.30	**H**	**F**	**2**	**1**	**P00**
160	LE160MA2 [2]	11.00	2 925	35.9	21.50	0.85	87.60	87.60	IE1	5.80	**J**	**N**	**2**	**1**	**P00**
	LE160MF2 [2]	15.00	2 930	48.9	29.00	0.84	88.70	89.00	IE1	6.10	**J**	**Q**	**2**	**1**	**P00**
	LE160LB2 [2]	18.50	2 935	60.2	35.00	0.86	89.30	90.00	IE1	7.00	**J**	**T**	**2**	**1**	**P00**
6-pole, 1 000 rpm at 50 Hz															
63	LA63MF6 [1]	0.09	850	1.01	0.44	0.66	50.20	48.70	-	2.00	**B**	**D**	**1**	**1**	**P01**
	LA63MG6	0.12	870	1.32	0.75	0.62	37.20	32.60	-	1.90	**B**	**E**	**1**	**1**	**P01**
71	LA71MG6 [1]	0.18	850	2.02	0.72	0.68	57.30	55.80	-	2.30	**C**	**D**	**1**	**1**	**P01**
	LA71MH6 [1]	0.25	830	2.88	0.79	0.76	61.90	60.40	-	2.70	**C**	**E**	**1**	**1**	**P01**
100	LE100LD6 [2]	1.50	940	15.2	3.90	0.74	75.20	76.00	IE1	4.00	**F**	**M**	**2**	**1**	**P01**
112	LE112MB6 [2]	2.20	930	22.6	5.40	0.75	77.70	78.80	IE1	4.10	**G**	**G**	**2**	**1**	**P01**
132	LE132SB6 [2]	3.00	955	30.0	7.30	0.74	79.70	80.20	IE1	4.60	**H**	**E**	**2**	**1**	**P01**
	LE132MA6 [2]	4.00	950	40.2	9.30	0.76	81.40	82.90	IE1	4.70	**H**	**H**	**2**	**1**	**P01**
	LE132MJ6 [2]	5.50	950	55.3	12.80	0.75	83.10	84.60	IE1	5.20	**H**	**K**	**2**	**1**	**P01**
160	LE160ML6 [2]	7.50	970	73.8	17.60	0.73	84.70	85.40	IE1	5.50	**J**	**H**	**2**	**1**	**P01**
	LE160LN6 [2]	11.00	965	108.9	24.00	0.77	86.40	86.40	IE1	5.90	**J**	**U**	**2**	**1**	**P01**
8-pole, 750 rpm at 50 Hz															
71	LA71MH8	0.09	630	1.36	0.36	0.68	51.00	49.50	-	2.20	**C**	**E**	**1**	**1**	**P02**
	LA71MJ8	0.12	645	1.78	0.53	0.64	51.00	49.50	-	2.20	**C**	**F**	**1**	**1**	**P02**
100	LE100LA8	0.75	705	10.2	3.01	0.62	62.60	60.80	-	3.00	**F**	**B**	**2**	**1**	**P02**
	LE100LK8	1.10	705	14.9	3.85	0.63	65.50	64.20	-	3.20	**F**	**P**	**2**	**1**	**P02**
112	LE112MG8	1.50	700	20.5	4.65	0.65	71.60	72.20	-	3.30	**G**	**J**	**2**	**1**	**P02**
132	LE132SL8	2.20	715	29.4	6.30	0.66	76.80	77.40	-	3.90	**H**	**G**	**2**	**1**	**P02**
	LE132MJ8	3.00	710	40.3	8.60	0.66	76.60	77.80	-	3.90	**H**	**K**	**2**	**1**	**P02**
160	LE160MD8	4.00	720	53.1	10.60	0.69	78.30	78.50	-	3.80	**J**	**F**	**2**	**1**	**P02**
	LE160ML8	5.50	720	72.9	13.80	0.70	81.70	82.50	-	4.00	**J**	**H**	**2**	**1**	**P02**
	LE160LN8	7.50	715	100.2	18.60	0.70	83.50	84.50	-	3.80	**J**	**L**	**2**	**1**	**P02**

O. R. On request

[1] The technical specifications also apply to LAI63 and LAI71 motors (with IEC B14 flange) for worm geared motors S.
[2] Only as brake motor or motor for intermittent duty S3 - 75 %.

© Siemens AG 2017

Selection and ordering data (continued)

Frame size	Motor	T_{St}/T_{rated}	T_{Bk}/T_{rated}	T_A/T_{rated}	L_{pfA}	L_{WA}	Z_0	J_{mot}	m_{mot}	Article No. Data position 9th	10th	11th	12th	Order code No. poles
		-	-	-	dB (A)	dB (A)	1/h	10^{-4} kgm²	kg					
4-pole, 1 500 rpm at 50 Hz														
63	LA63MD4	2.60	2.70	2.30	42	53	20 000	2.9	3.20	**B**	**B**	**1**	**1**	**-**
	LA63ME4 [1]	1.90	2.00	1.70	42	53	20 000	2.9	3.20	**B**	**C**	**1**	**1**	**-**
	LA63MF4 [1]	1.90	1.90	1.60	42	53	15 000	3.7	3.60	**B**	**D**	**1**	**1**	**-**
71	LA71MG4 [1]	1.90	1.90	1.50	44	55	10 000	5.2	4.30	**C**	**D**	**1**	**1**	**-**
	LA71MH4 [1]	1.90	2.10	1.60	44	55	10 000	7.7	5.80	**C**	**E**	**1**	**1**	**-**
	LA71ZML4	2.30	2.30	2.10	46	57	9 000	11.0	8.10	**C**	**H**	**1**	**1**	**-**
80	LE80MB4	2.20	2.80	2.40	53	64	9 000	O. R.	O. R.	**D**	**B**	**2**	**1**	**-**
	LE80MF4 [2]	2.10	2.50	2.30	53	64	9 000	O. R.	O. R.	**D**	**D**	**2**	**1**	**-**
90	LE90SE4 [2]	2.20	2.60	2.40	56	67	7 500	O. R.	O. R.	**E**	**L**	**2**	**1**	**-**
	LE90LD4 [2]	2.40	2.60	2.60	58	69	7 500	O. R.	O. R.	**E**	**N**	**2**	**1**	**-**
100	LE100LB4 [2]	2.20	2.30	2.40	60	72	6 000	59.0	21.00	**F**	**L**	**2**	**1**	**-**
	LE100LH4 [2]	2.40	2.60	2.60	60	72	6 000	78.0	25.00	**F**	**N**	**2**	**1**	**-**
112	LE112ME4 [2]	2.20	2.60	2.40	58	70	5 000	100.0	31.00	**G**	**H**	**2**	**1**	**-**
132	LE132SF4 [2]	2.30	2.70	2.50	64	76	3 000	190.0	44.00	**H**	**F**	**2**	**1**	**-**
	LE132ME4 [2]	2.60	3.10	2.80	64	76	3 000	240.0	51.00	**H**	**J**	**2**	**1**	**-**
	LE132ZMSA4 [2]	2.20	3.20	O. R.	65	77	1 600	330.0	O. R.	**H**	**V**	**2**	**1**	**-**
160	LE160MD4 [2]	2.30	3.10	2.50	65	77	2 000	440.0	73.00	**J**	**P**	**2**	**1**	**-**
	LE160LA4 [2]	2.50	3.40	2.70	65	77	2 000	560.0	84.00	**J**	**S**	**2**	**1**	**-**
2-pole, 3 000 rpm at 50 Hz														
63	LA63ME2 [1]	2.00	2.20	O. R.	49	60	7 000	1.8	3.20	**B**	**C**	**1**	**1**	**P00**
	LA63MF2 [1]	2.00	2.20	O. R.	49	60	7 000	2.2	3.60	**B**	**D**	**1**	**1**	**P00**
71	LA71MG2 [1]	2.30	2.30	O. R.	52	63	7 000	2.9	4.50	**C**	**D**	**1**	**1**	**P00**
	LA71MH2 [1]	2.50	2.60	O. R.	52	63	7 000	4.1	5.50	**C**	**E**	**1**	**1**	**P00**
100	LE100LD2 [2]	3.20	2.90	3.50	67	79	3 000	34.0	23.00	**F**	**M**	**2**	**1**	**P00**
112	LE112MB2 [2]	2.70	3.70	2.90	69	81	2 000	67.0	29.00	**G**	**G**	**2**	**1**	**P00**
132	LE132SB2 [2]	1.90	2.50	2.00	68	80	1 000	130.0	40.00	**H**	**E**	**2**	**1**	**P00**
	LE132SF2 [2]	2.10	3.20	2.30	68	80	1 000	160.0	46.00	**H**	**F**	**2**	**1**	**P00**
160	LE160MA2 [2]	2.00	2.60	2.20	70	82	600	300.0	69.00	**J**	**N**	**2**	**1**	**P00**
	LE160MF2 [2]	2.50	3.10	2.70	70	82	600	360.0	78.00	**J**	**Q**	**2**	**1**	**P00**
	LE160LB2 [2]	2.50	3.20	2.70	70	82	600	440.0	90.00	**J**	**T**	**2**	**1**	**P00**
6-pole, 1 000 rpm at 50 Hz														
63	LA63MF6 [1]	1.80	1.90	O. R.	39	50	15 000	3.7	3.60	**B**	**D**	**1**	**1**	**P01**
	LA63MG6	2.10	2.10	O. R.	39	50	15 000	3.7	3.60	**B**	**E**	**1**	**1**	**P01**
71	LA71MG6 [1]	2.10	1.90	O. R.	39	50	15 000	5.5	4.30	**C**	**D**	**1**	**1**	**P01**
	LA71MH6 [1]	2.20	2.00	O. R.	39	50	15 000	8.0	5.30	**C**	**E**	**1**	**1**	**P01**
100	LE100LD6 [2]	2.00	2.20	2.20	59	71	9 000	65.0	22.00	**F**	**M**	**2**	**1**	**P01**
112	LE112MB6 [2]	2.30	2.50	2.50	57	69	8 000	92.0	29.00	**G**	**G**	**2**	**1**	**P01**
132	LE132SB6 [2]	2.00	2.60	2.20	63	75	6 000	170.0	39.00	**H**	**E**	**2**	**1**	**P01**
	LE132MA6 [2]	2.10	2.50	2.30	63	75	6 000	210.0	45.00	**H**	**H**	**2**	**1**	**P01**
	LE132MJ6 [2]	2.50	2.80	2.70	63	75	5 000	270.0	55.00	**H**	**K**	**2**	**1**	**P01**
160	LE160ML6 [2]	2.10	2.90	2.30	67	79	4 000	560.0	83.00	**J**	**H**	**2**	**1**	**P01**
	LE160LN6 [2]	1.90	2.70	2.00	67	79	4 000	780.0	106.00	**J**	**U**	**2**	**1**	**P01**
8-pole, 750 rpm at 50 Hz														
71	LA71MH8	1.90	1.70	O. R.	36	47	O. R.	8.0	5.30	**C**	**E**	**1**	**1**	**P02**
	LA71MJ8	2.20	2.00	O. R.	36	47	O. R.	8.0	5.30	**C**	**F**	**1**	**1**	**P02**
100	LE100LA8	1.90	2.20	2.00	60	72	O. R.	56.0	17.00	**F**	**B**	**2**	**1**	**P02**
	LE100LK8	2.00	2.30	2.20	60	72	O. R.	78.0	22.00	**F**	**P**	**2**	**1**	**P02**
112	LE112MG8	1.60	1.90	1.70	63	75	O. R.	94.0	29.00	**G**	**J**	**2**	**1**	**P02**
132	LE132SL8	1.70	2.40	1.80	63	75	O. R.	190.0	37.00	**H**	**G**	**2**	**1**	**P02**
	LE132MJ8	1.80	2.20	1.90	63	75	O. R.	240.0	44.00	**H**	**K**	**2**	**1**	**P02**
160	LE160MD8	1.70	2.30	1.80	63	75	O. R.	440.0	60.00	**J**	**F**	**2**	**1**	**P02**
	LE160ML8	1.60	2.20	1.70	63	75	O. R.	560.0	72.00	**J**	**H**	**2**	**1**	**P02**
	LE160LN8	1.70	2.20	1.80	63	75	O. R.	770.0	91.00	**J**	**L**	**2**	**1**	**P02**

O. R. On request

[1] The technical specifications also apply to LAI63 and LAI71 motors (with IEC B14 flange) for worm geared motors S.
[2] Only as brake motor or motor for intermittent duty S3 - 75 %.

© Siemens AG 2017

Selection and ordering data (continued)

Frame size	Motor	P_{rated}	n_{rated}	T_{rated}	I_{rated}	cos φ	η		Efficiency class	I_{St}/I_{rated}	Article No.				Order code
					460 V		4/4 load	3/4 load	acc. to IEC		Data position				No. poles
		kW	rpm	Nm	A	-	%	%	60034-30	-	9th	10th	11th	12th	
4-pole, 1 800 rpm at 60 Hz, 50 Hz power															
63	LA63MD4	0.09	1 695	0.51	0.41	0.60	46.00	41.00	-	3.30	**B**	**B**	**1**	**1**	**-**
	LA63ME4	0.12	1 670	0.69	0.42	0.68	54.10	51.80	-	3.20	**B**	**C**	**1**	**1**	**-**
	LA63MF4	0.18	1 690	1.02	0.56	0.70	58.80	56.40	-	3.30	**B**	**D**	**1**	**1**	**-**
71	LA71MG4	0.25	1 675	1.43	0.74	0.65	65.50	63.00	-	3.60	**C**	**D**	**1**	**1**	**-**
	LA71MH4	0.37	1 695	2.08	0.97	0.66	73.00	71.80	-	4.20	**C**	**E**	**1**	**1**	**-**
	LA71ZML4	0.55	1 680	3.13	1.41	0.68	72.20	71.00	-	4.20	**C**	**H**	**1**	**1**	**-**
80	LE80MB4	0.55	1 745	3.01	1.41	0.69	74.00	73.00	-	5.70	**D**	**B**	**2**	**1**	**-**
	LE80MF4 [1]	0.75	1 735	4.13	1.70	0.75	77.00	76.60	IE1	5.60	**D**	**D**	**2**	**1**	**-**
90	LE90SE4 [1]	1.10	1 730	6.07	2.35	0.77	79.00	79.20	IE1	5.90	**E**	**L**	**2**	**1**	**-**
	LE90LD4 [1]	1.50	1 730	8.28	3.15	0.77	81.50	81.70	IE1	6.40	**E**	**N**	**2**	**1**	**-**
100	LE100LB4 [1]	2.20	1 720	12.2	4.30	0.82	83.00	83.00	-	5.80	**F**	**L**	**2**	**1**	**-**
	LE100LH4 [1]	3.00	1 725	16.6	5.50	0.86	85.00	85.00	-	6.00	**F**	**N**	**2**	**1**	**-**
112	LE112ME4 [1]	4.00	1 730	22.1	7.30	0.85	85.00	85.00	-	5.80	**G**	**H**	**2**	**1**	**-**
132	LE132SF4 [1]	5.50	1 745	30.1	9.90	0.84	87.00	87.00	-	6.70	**H**	**F**	**2**	**1**	**-**
	LE132ME4 [1]	7.50	1 750	40.9	13.40	0.84	87.50	87.50	-	7.00	**H**	**J**	**2**	**1**	**-**
	LE132ZMSA4 [1]	9.20	1 760	49.9	15.4	0.85	88.50	O. R.	IE1	9.10	**H**	**V**	**2**	**1**	**-**
160	LE160MD4 [1]	11.00	1 760	59.7	19.90	0.82	88.50	88.50	-	7.70	**J**	**P**	**2**	**1**	**-**
	LE160LA4 [1]	15.00	1 760	81.4	27.00	0.82	89.50	89.50	-	7.60	**J**	**S**	**2**	**1**	**-**
2-pole, 3 600 rpm at 60 Hz, 50 Hz power															
63	LA63ME2	0.18	3 455	0.50	0.47	0.76	63.50	61.70	-	4.50	**B**	**C**	**1**	**1**	**P00**
	LA63MF2	0.25	3 455	0.69	0.65	0.75	65.00	63.20	-	4.60	**B**	**D**	**1**	**1**	**P00**
71	LA71MG2	0.37	3 410	1.04	0.91	0.76	67.00	65.10	-	5.00	**C**	**D**	**1**	**1**	**P00**
	LA71MH2	0.55	3 440	1.53	1.25	0.78	71.10	70.00	-	5.40	**C**	**E**	**1**	**1**	**P00**
100	LE100LD2 [1]	3.00	3 430	8.35	5.30	0.88	84.50	84.50	-	6.80	**F**	**M**	**2**	**1**	**P00**
112	LE112MB2 [1]	4.00	3 525	10.8	7.10	0.88	84.50	84.50	-	7.50	**G**	**G**	**2**	**1**	**P00**
132	LE132SB2 [1]	5.50	3 505	15.0	9.30	0.90	86.00	86.00	-	5.70	**H**	**E**	**2**	**1**	**P00**
	LE132SF2 [1]	7.50	3 530	20.3	12.80	0.88	87.50	87.50	-	6.90	**H**	**F**	**2**	**1**	**P00**
160	LE160MA2 [1]	11.00	3 520	29.8	19.20	0.86	87.50	87.50	-	6.50	**J**	**N**	**2**	**1**	**P00**
	LE160MF2 [1]	15.00	3 530	40.6	26.00	0.86	88.50	88.50	-	6.40	**J**	**Q**	**2**	**1**	**P00**
	LE160LB2 [1]	18.50	3 530	50.0	31.00	0.87	89.50	89.50	-	7.20	**J**	**T**	**2**	**1**	**P00**
6-pole, 1 200 rpm at 60 Hz, 50 Hz power															
63	LA63MF6	0.09	1 075	0.8	0.38	0.63	47.10	44.90	-	2.20	**B**	**D**	**1**	**1**	**P01**
	LA63MG6	0.12	1 100	1.04	0.73	0.53	39.40	33.80	-	2.10	**B**	**E**	**1**	**1**	**P01**
71	LA71MG6	0.18	1 080	1.59	0.67	0.61	56.40	54.10	-	3.10	**C**	**D**	**1**	**1**	**P01**
	LA71MH6	0.25	1 090	2.19	0.72	0.70	62.90	60.60	-	3.40	**C**	**E**	**1**	**1**	**P01**
100	LE100LD6 [1]	1.50	1 140	12.6	3.30	0.78	77.00	77.50	-	4.50	**F**	**M**	**2**	**1**	**P01**
112	LE112MB6 [1]	2.20	1 130	18.6	4.70	0.78	78.50	79.00	-	4.50	**G**	**G**	**2**	**1**	**P01**
132	LE132SB6 [1]	3.00	1 150	24.9	6.30	0.75	83.50	83.50	-	4.60	**H**	**E**	**2**	**1**	**P01**
	LE132MA6 [1]	4.00	1 145	33.4	8.10	0.78	83.50	83.50	-	4.70	**H**	**H**	**2**	**1**	**P01**
	LE132MJ6 [1]	5.50	1 150	45.7	11.20	0.76	85.00	85.00	-	5.20	**H**	**K**	**2**	**1**	**P01**
160	LE160ML6 [1]	7.50	1 170	61.2	15.30	0.75	86.00	86.00	-	6.20	**J**	**H**	**2**	**1**	**P01**
	LE160LN6 [1]	11.00	1 165	90.2	21.00	0.77	89.00	89.00	-	6.30	**J**	**U**	**2**	**1**	**P01**
8-pole, 900 rpm at 60 Hz, 50 Hz power															
71	LA71MH8	0.09	815	1.05	0.36	0.61	51.40	49.70	-	2.40	**C**	**E**	**1**	**1**	**P02**
	LA71MJ8	0.12	825	1.39	0.55	0.56	50.10	48.10	-	2.30	**C**	**F**	**1**	**1**	**P02**
100	LE100LA8	0.75	855	8.38	2.73	0.61	67.90	67.40	-	3.30	**F**	**B**	**2**	**1**	**P02**
	LE100LK8	1.10	855	12.3	3.20	0.62	72.40	72.40	-	3.50	**F**	**P**	**2**	**1**	**P02**
112	LE112MG8	1.50	850	16.9	4.00	0.66	74.30	74.30	-	3.80	**G**	**J**	**2**	**1**	**P02**
132	LE132SL8	2.20	865	24.3	5.40	0.66	80.60	80.60	-	4.60	**H**	**G**	**2**	**1**	**P02**
	LE132MJ8	3.00	865	33.1	7.10	0.68	81.00	81.00	-	4.50	**H**	**K**	**2**	**1**	**P02**
160	LE160MD8	4.00	870	43.9	9.60	0.70	78.30	78.80	-	4.30	**J**	**F**	**2**	**1**	**P02**
	LE160ML8	5.50	870	60.4	12.40	0.71	81.90	81.90	-	4.20	**J**	**H**	**2**	**1**	**P02**
	LE160LN8	7.50	870	82.3	17.20	0.70	81.90	81.90	-	4.30	**J**	**L**	**2**	**1**	**P02**

O. R. On request

[1] Only as brake motor or motor for intermittent duty S3 - 75 %

© Siemens AG 2017

Selection and ordering data (continued)

Frame size	Motor	T_{St}/T_{rated}	T_{Bk}/T_{rated}	T_A/T_{rated}	L_{pfA}	L_{WA}	Z_0	J_{mot}	m_{mot}	Article No. Data position 9th	10th	11th	12th	Order code No. poles
		-	-	-	dB (A)	dB (A)	1/h	10^{-4} kgm²	kg					
4-pole, 1 800 rpm at 60 Hz, 50 Hz power														
63	LA63MD4	3.20	3.30	2.90	46	57	15 000	2.9	3.20	**B**	**B**	**1**	**1**	**-**
	LA63ME4	2.30	2.40	2.10	46	57	15 000	2.9	3.20	**B**	**C**	**1**	**1**	**-**
	LA63MF4	2.30	2.30	2.00	46	57	12 000	3.7	3.60	**B**	**D**	**1**	**1**	**-**
71	LA71MG4	2.20	2.30	1.80	48	59	8 000	5.2	4.30	**C**	**D**	**1**	**1**	**-**
	LA71MH4	2.30	2.50	2.00	48	59	8 000	7.7	5.80	**C**	**E**	**1**	**1**	**-**
	LA71ZML4	2.50	2.50	2.30	48	59	7 000	11	8.10	**C**	**H**	**1**	**1**	
80	LE80MB4	2.40	3.30	2.60	55	66	7 000	O. R.	O. R.	**D**	**B**	**2**	**1**	**-**
	LE80MF4 [1]	2.30	2.80	2.50	55	66	7 000	O. R.	O. R.	**D**	**D**	**2**	**1**	**-**
90	LE90SE4 [1]	2.50	3.00	2.80	54	65	6 000	O. R.	O. R.	**E**	**L**	**2**	**1**	**-**
	LE90LD4 [1]	2.60	3.00	2.90	55	66	6 000	O. R.	O. R.	**E**	**N**	**2**	**1**	**-**
100	LE100LB4 [1]	2.20	2.40	2.40	62	74	5 000	59.0	21.00	**F**	**L**	**2**	**1**	**-**
	LE100LH4 [1]	2.20	2.30	2.40	62	74	5 000	78.0	25.00	**F**	**N**	**2**	**1**	**-**
112	LE112ME4 [1]	2.10	2.70	O. R.	62	74	5 000	100.0	31.00	**G**	**H**	**2**	**1**	**-**
132	LE132SF4 [1]	2.20	2.80	O. R.	68	80	3 000	190.0	44.00	**H**	**F**	**2**	**1**	**-**
	LE132ME4 [1]	2.40	3.00	O. R.	68	80	3 000	240.0	51.00	**H**	**J**	**2**	**1**	**-**
	LE132ZMSA4 [1]	2.40	3.70	O. R.	69	81	1 600	330.0	O. R.	**H**	**V**	**2**	**1**	**-**
160	LE160MD4 [1]	2.30	3.10	O. R.	69	81	2 000	440.0	73.00	**J**	**P**	**2**	**1**	**-**
	LE160LA4 [1]	2.50	3.40	O. R.	69	81	2 000	560.0	84.00	**J**	**S**	**2**	**1**	**-**
2-pole, 3 600 rpm at 60 Hz, 50 Hz power														
63	LA63ME2	2.40	2.70	O. R.	53	64	5 000	1.8	3.20	**B**	**C**	**1**	**1**	**P00**
	LA63MF2	2.40	2.70	O. R.	53	64	5 000	2.2	3.60	**B**	**D**	**1**	**1**	**P00**
71	LA71MG2	2.90	2.90	O. R.	56	67	5 000	2.9	4.50	**C**	**D**	**1**	**1**	**P00**
	LA71MH2	3.00	2.90	O. R.	56	67	5 000	4.1	5.50	**C**	**E**	**1**	**1**	**P00**
100	LE100LD2 [1]	3.40	3.30	O. R.	71	83	2 000	34.0	23.00	**F**	**M**	**2**	**1**	**P00**
112	LE112MB2 [1]	2.70	3.80	O. R.	73	85	O. R.	67.0	29.00	**G**	**G**	**2**	**1**	**P00**
132	LE132SB2 [1]	1.80	2.70	O. R.	72	84	O. R.	130.0	40.00	**H**	**E**	**2**	**1**	**P00**
	LE132SF2 [1]	2.30	3.40	O. R.	72	84	O. R.	160.0	46.00	**H**	**F**	**2**	**1**	**P00**
160	LE160MA2 [1]	2.10	2.90	O. R.	77	89	O. R.	300.0	69.00	**J**	**N**	**2**	**1**	**P00**
	LE160MF2 [1]	2.40	3.10	O. R.	77	89	O. R.	360.0	78.00	**J**	**Q**	**2**	**1**	**P00**
	LE160LB2 [1]	2.40	3.20	O. R.	77	89	O. R.	440.0	90.00	**J**	**T**	**2**	**1**	**P00**
6-pole, 1 200 rpm at 60 Hz, 50 Hz power														
63	LA63MF6	2.10	1.80	O. R.	43	54	10 500	3.7	3.60	**B**	**D**	**1**	**1**	**P01**
	LA63MG6	2.70	2.80	O. R.	43	54	10 500	3.7	3.60	**B**	**E**	**1**	**1**	**P01**
71	LA71MG6	2.50	2.50	O. R.	43	54	10 500	5.5	4.30	**C**	**D**	**1**	**1**	**P01**
	LA71MH6	2.70	2.60	O. R.	43	54	10 500	8.0	5.30	**C**	**E**	**1**	**1**	**P01**
100	LE100LD6 [1]	2.10	2.50	O. R.	62	74	O. R.	65.0	22.00	**F**	**M**	**2**	**1**	**P01**
112	LE112MB6 [1]	2.30	2.60	O. R.	60	72	O. R.	92.0	29.00	**G**	**G**	**2**	**1**	**P01**
132	LE132SB6 [1]	1.90	2.30	O. R.	67	79	O. R.	170.0	39.00	**H**	**E**	**2**	**1**	**P01**
	LE132MA6 [1]	2.00	2.40	O. R.	67	79	O. R.	210.0	45.00	**H**	**H**	**2**	**1**	**P01**
	LE132MJ6 [1]	2.40	2.60	O. R.	67	79	O. R.	270.0	55.00	**H**	**K**	**2**	**1**	**P01**
160	LE160ML6 [1]	2.30	3.00	O. R.	70	82	O. R.	560.0	83.00	**J**	**H**	**2**	**1**	**P01**
	LE160LN6 [1]	1.90	2.70	O. R.	70	82	O. R.	780.0	106.00	**J**	**U**	**2**	**1**	**P01**
8-pole, 900 rpm at 60 Hz, 50 Hz power														
71	LA71MH8	2.30	2.00	O. R.	39	50	O. R.	8.0	5.30	**C**	**E**	**1**	**1**	**P02**
	LA71MJ8	2.60	2.40	O. R.	39	51	O. R.	8.0	5.30	**C**	**F**	**1**	**1**	**P02**
100	LE100LA8	1.70	2.30	O. R.	63	75	O. R.	56.0	17.00	**F**	**B**	**2**	**1**	**P02**
	LE100LK8	1.80	2.30	O. R.	63	75	O. R.	78.0	22.00	**F**	**P**	**2**	**1**	**P02**
112	LE112MG8	1.60	2.00	O. R.	66	78	O. R.	94.0	29.00	**G**	**J**	**2**	**1**	**P02**
132	LE132SL8	1.60	2.30	O. R.	66	78	O. R.	190.0	37.00	**H**	**G**	**2**	**1**	**P02**
	LE132MJ8	1.70	2.20	O. R.	66	78	O. R.	240.0	44.00	**H**	**K**	**2**	**1**	**P02**
160	LE160MD8	1.70	2.30	O. R.	71	83	O. R.	440.0	60.00	**J**	**F**	**2**	**1**	**P02**
	LE160ML8	1.60	2.20	O. R.	71	83	O. R.	560.0	72.00	**J**	**H**	**2**	**1**	**P02**
	LE160LN8	1.70	2.20	O. R.	71	83	O. R.	770.0	91.00	**J**	**L**	**2**	**1**	**P02**

O. R. On request

[1] Only as brake motor or motor for intermittent duty S3 - 75 %

© Siemens AG 2017

Selection and ordering data (continued)

Frame size	Motor	P_{rated}	n_{rated}	T_{rated}	I_{rated}	cos φ	η		Efficiency class	I_{St}/I_{rated}	Article No.				Order code
					460 V		4/4 load	3/4 load	acc. to IEC		Data position				No. poles
		kW	rpm	Nm	A	-	%	%	60034-30	-	9th	10th	11th	12th	
4-pole, 1 800 rpm at 60 Hz, 60 Hz power															
63	LA63MD4	0.11	1 675	0.63	0.42	0.64	51.80	46.20	-	3.20	**B**	**B**	**1**	**1**	**-**
	LA63ME4 [1]	0.14	1 650	0.81	0.43	0.74	56.00	54.50	-	3.10	**B**	**C**	**1**	**1**	**-**
	LA63MF4 [1]	0.21	1 650	1.22	0.59	0.77	58.30	56.80	-	3.10	**B**	**D**	**1**	**1**	**-**
71	LA71MG4 [1]	0.29	1 650	1.68	0.76	0.77	61.90	60.40	-	3.30	**C**	**D**	**1**	**1**	**-**
	LA71MH4 [1]	0.43	1 670	2.46	1.08	0.76	65.80	64.80	-	3.80	**C**	**E**	**1**	**1**	**-**
	LA71ZML4	0.66	1 665	3.79	1.54	0.74	72.80	71.80	-	3.80	**C**	**H**	**1**	**1**	**-**
80	LE80MB4	0.63	1 740	3.46	1.55	0.69	74.00	72.90	IE1	5.40	**D**	**B**	**2**	**1**	**-**
	LE80MF4 [2]	0.86	1 730	4.75	1.87	0.75	77.00	76.90	IE1	5.30	**D**	**D**	**2**	**1**	**-**
90	LE90SE4 [2]	1.27	1 725	7.03	2.60	0.77	79.00	79.30	IE1	5.60	**E**	**L**	**2**	**1**	**-**
	LE90LD4 [2]	1.75	1 720	9.72	3.50	0.77	81.50	82.00	IE1	6.00	**E**	**N**	**2**	**1**	**-**
100	LE100LB4 [2]	2.55	1 720	14.2	4.70	0.82	83.00	83.00	IE1	5.80	**F**	**L**	**2**	**1**	**-**
	LE100LH4 [2]	3.45	1 725	19.1	5.90	0.86	85.00	85.00	IE1	6.00	**F**	**N**	**2**	**1**	**-**
112	LE112ME4 [2]	4.55	1 730	25.1	7.90	0.85	85.00	85.00	IE1	5.80	**G**	**H**	**2**	**1**	**-**
132	LE132SF4 [2]	6.30	1 745	34.5	10.80	0.84	87.00	87.00	IE1	6.70	**H**	**F**	**2**	**1**	**-**
	LE132ME4 [2]	8.60	1 750	46.9	14.70	0.84	87.50	87.50	IE1	7.00	**H**	**J**	**2**	**1**	**-**
	LE132ZMSA4 [2]	10.50	1 750	57.3	17.70	0.85	88.50	O. R.	IE1	8.00	**H**	**V**	**2**	**1**	**-**
160	LE160MD4 [2]	12.60	1 760	68.4	22.00	0.82	88.50	88.50	IE1	6.80	**J**	**P**	**2**	**1**	**-**
	LE160LA4 [2]	17.30	1 760	93.9	29.50	0.82	90.50	90.50	IE1	7.30	**J**	**S**	**2**	**1**	**-**
2-pole, 3 600 rpm at 60 Hz, 60 Hz power															
63	LA63ME2 [1]	0.21	3 420	0.59	0.51	0.81	64.00	63.00	-	4.10	**B**	**C**	**1**	**1**	**P00**
	LA63MF2 [1]	0.29	3 430	0.81	0.68	0.82	65.00	64.00	-	4.30	**B**	**D**	**1**	**1**	**P00**
71	LA71MG2 [1]	0.43	3 340	1.23	1.00	0.82	66.00	65.00	-	4.50	**C**	**D**	**1**	**1**	**P00**
	LA71MH2 [1]	0.63	3 400	1.77	1.36	0.82	71.00	71.00	-	4.90	**C**	**E**	**1**	**1**	**P00**
100	LE100LD2 [2]	3.45	3 430	9.6	5.80	0.88	84.50	84.50	IE1	6.80	**F**	**M**	**2**	**1**	**P00**
112	LE112MB2 [2]	4.55	3 525	12.3	7.70	0.88	84.50	84.50	IE1	7.50	**G**	**G**	**2**	**1**	**P00**
132	LE132SB2 [2]	6.30	3 505	17.2	10.20	0.90	86.00	86.00	IE1	5.70	**H**	**E**	**2**	**1**	**P00**
	LE132SF2 [2]	8.60	3 530	23.3	14.00	0.88	87.50	87.50	IE1	6.90	**H**	**F**	**2**	**1**	**P00**
160	LE160MA2 [2]	12.60	3 520	34.2	21.00	0.86	87.50	87.50	IE1	5.70	**J**	**N**	**2**	**1**	**P00**
	LE160MF2 [2]	17.30	3 530	46.8	28.00	0.86	89.50	89.50	IE1	6.40	**J**	**Q**	**2**	**1**	**P00**
	LE160LB2 [2]	21.30	3 530	57.6	34.50	0.87	89.50	89.50	IE1	7.20	**J**	**T**	**2**	**1**	**P00**
6-pole, 1 200 rpm at 60 Hz, 60 Hz power															
63	LA63MF6 [1]	0.10	1 050	0.91	0.39	0.67	48.00	46.50	-	2.10	**B**	**D**	**1**	**1**	**P01**
	LA63MG6	0.14	1 080	1.24	0.74	0.57	41.90	37.00	-	2.10	**B**	**E**	**1**	**1**	**P01**
71	LA71MG6 [1]	0.21	1 035	1.94	0.69	0.67	57.30	55.80	-	3.00	**C**	**D**	**1**	**1**	**P01**
	LA71MH6 [1]	0.29	1 030	2.69	0.78	0.75	61.90	60.40	-	3.10	**C**	**E**	**1**	**1**	**P01**
100	LE100LD6 [2]	1.75	1 140	14.7	3.65	0.78	77.00	77.50	IE1	4.50	**F**	**M**	**2**	**1**	**P01**
112	LE112MB6 [2]	2.55	1 130	21.5	5.20	0.78	78.50	79.00	IE1	4.50	**G**	**G**	**2**	**1**	**P01**
132	LE132SB6 [2]	3.45	1 150	28.6	6.90	0.75	83.50	83.50	IE1	4.60	**H**	**E**	**2**	**1**	**P01**
	LE132MA6 [2]	4.55	1 145	37.9	8.80	0.78	83.50	83.50	IE1	4.70	**H**	**H**	**2**	**1**	**P01**
	LE132MJ6 [2]	6.30	1 150	52.3	12.20	0.76	85.00	85.00	IE1	5.20	**H**	**K**	**2**	**1**	**P01**
160	LE160ML6 [2]	8.60	1 170	70.2	16.70	0.75	86.00	86.00	IE1	5.90	**J**	**H**	**2**	**1**	**P01**
	LE160LN6 [2]	12.60	1 165	103.3	23.00	0.77	89.00	89.00	IE1	6.30	**J**	**U**	**2**	**1**	**P01**
8-pole, 900 rpm at 60 Hz, 60 Hz power															
71	LA71MH8	0.104	780	1.27	0.39	0.66	50.50	49.00	-	2.20	**C**	**E**	**1**	**1**	**P02**
	LA71MJ8	0.14	795	1.68	0.56	0.62	50.60	49.10	-	2.20	**C**	**F**	**1**	**1**	**P02**
100	LE100LA8	0.86	855	9.61	2.73	0.61	68.00	67.50	-	3.30	**F**	**B**	**2**	**1**	**P02**
	LE100LK8	1.27	855	14.2	3.55	0.62	72.50	72.50	-	3.50	**F**	**P**	**2**	**1**	**P02**
112	LE112MG8	1.75	850	19.7	4.50	0.66	74.30	74.30	-	3.80	**G**	**J**	**2**	**1**	**P02**
132	LE132SL8	2.55	865	28.2	6.00	0.66	81.40	81.40	-	4.10	**H**	**G**	**2**	**1**	**P02**
	LE132MJ8	3.45	865	38.1	7.80	0.68	82.10	82.10	-	4.00	**H**	**K**	**2**	**1**	**P02**
160	LE160MD8	4.55	870	49.9	10.40	0.70	78.30	78.80	-	4.10	**J**	**F**	**2**	**1**	**P02**
	LE160ML8	6.30	870	69.2	13.60	0.71	81.90	81.90	-	4.20	**J**	**H**	**2**	**1**	**P02**
	LE160LN8	8.60	865	94.9	18.80	0.70	82.00	82.00	-	4.10	**J**	**L**	**2**	**1**	**P02**

O. R. On request

[1] The technical specifications also apply to LAI63 and LAI71 motors (with IEC B14 flange) for worm geared motors S.
[2] Only as brake motor or motor for intermittent duty S3 - 75 %.

© Siemens AG 2017

Selection and ordering data (continued)

Frame size	Motor	T_{St}/T_{rated}	T_{Bk}/T_{rated}	T_A/T_{rated}	L_{pfA}	L_{WA}	Z_0	J_{mot}	m_{mot}	Article No. Data position 9th	10th	11th	12th	Order code No. poles
		-	-	-	dB (A)	dB (A)	1/h	10^{-4} kgm²	kg					
4-pole, 1 800 rpm at 60 Hz, 60 Hz power														
63	LA63MD4	2.50	2.70	2.30	46	57	15 000	2.9	3.20	**B**	**B**	**1**	**1**	**-**
	LA63ME4 [1]	2.00	2.10	1.80	46	57	15 000	2.9	3.20	**B**	**C**	**1**	**1**	**-**
	LA63MF4 [1]	2.00	2.00	1.70	46	57	12 000	3.7	3.60	**B**	**D**	**1**	**1**	**-**
71	LA71MG4 [1]	1.90	2.00	1.60	48	59	8 000	5.2	4.30	**C**	**D**	**1**	**1**	**-**
	LA71MH4 [1]	2.00	2.20	1.70	48	59	8 000	7.7	5.80	**C**	**E**	**1**	**1**	**-**
	LA71ZML4	2.40	2.40	2.20	50	61	7 000	11.0	8.10	**C**	**H**	**1**	**1**	**-**
80	LE80MB4	2.30	3.10	2.50	55	66	7 000	O. R.	O. R.	**D**	**B**	**2**	**1**	**-**
	LE80MF4 [2]	2.20	2.70	2.40	55	66	7 000	O. R.	O. R.	**D**	**D**	**2**	**1**	**-**
90	LE90SE4 [2]	2.40	2.80	2.60	54	65	6 000	O. R.	O. R.	**E**	**L**	**2**	**1**	**-**
	LE90LD4 [2]	2.50	2.80	2.80	55	66	6 000	O. R.	O. R.	**E**	**N**	**2**	**1**	**-**
100	LE100LB4 [2]	2.20	2.40	2.40	62	74	5 000	59.0	21.00	**F**	**L**	**2**	**1**	**-**
	LE100LH4 [2]	2.20	2.30	2.40	62	74	5 000	78.0	25.00	**F**	**N**	**2**	**1**	**-**
112	LE112ME4 [2]	2.10	2.70	2.30	62	74	5 000	100.0	31.00	**G**	**H**	**2**	**1**	**-**
132	LE132SF4 [2]	2.20	2.80	2.40	68	80	3 000	190.0	44.00	**H**	**F**	**2**	**1**	**-**
	LE132ME4 [2]	2.40	3.00	2.60	68	80	3 000	240.0	51.00	**H**	**J**	**2**	**1**	**-**
	LE132ZMSA4 [2]	2.10	3.20	O. R.	69	81	1 600	330.0	O. R.	**H**	**V**	**2**	**1**	**-**
160	LE160MD4 [2]	2.30	3.00	2.50	69	81	2 000	440.0	73.00	**J**	**P**	**2**	**1**	**-**
	LE160LA4 [2]	2.50	3.40	2.70	69	81	2 000	560.0	84.00	**J**	**S**	**2**	**1**	**-**
2-pole, 3 600 rpm at 60 Hz, 60 Hz power														
63	LA63ME2 [1]	2.10	2.30	O. R.	53	64	5 000	1.8	3.20	**B**	**C**	**1**	**1**	**P00**
	LA63MF2 [1]	2.10	2.30	O. R.	53	64	5 000	2.2	3.60	**B**	**D**	**1**	**1**	**P00**
71	LA71MG2 [1]	2.50	2.50	O. R.	56	67	5 000	2.9	4.50	**C**	**D**	**1**	**1**	**P00**
	LA71MH2 [1]	2.60	2.50	O. R.	56	67	5 000	4.1	5.50	**C**	**E**	**1**	**1**	**P00**
100	LE100LD2 [2]	3.40	3.30	3.70	71	83	2 000	34.0	23.00	**F**	**M**	**2**	**1**	**P00**
112	LE112MB2 [2]	2.70	3.80	2.90	73	85	O. R.	67.0	29.00	**G**	**G**	**2**	**1**	**P00**
132	LE132SB2 [2]	1.80	2.70	1.90	72	84	O. R.	130.0	40.00	**H**	**E**	**2**	**1**	**P00**
	LE132SF2 [2]	2.30	3.40	2.50	72	84	O. R.	160.0	46.00	**H**	**F**	**2**	**1**	**P00**
160	LE160MA2 [2]	2.00	2.80	2.20	77	89	O. R.	300.0	69.00	**J**	**N**	**2**	**1**	**P00**
	LE160MF2 [2]	2.40	3.10	2.60	77	89	O. R.	360.0	78.00	**J**	**Q**	**2**	**1**	**P00**
	LE160LB2 [2]	2.40	3.20	2.60	77	89	O. R.	440.0	90.00	**J**	**T**	**2**	**1**	**P00**
6-pole, 1 200 rpm at 60 Hz, 60 Hz power														
63	LA63MF6 [1]	1.90	1.60	O. R.	43	54	10 500	3.7	3.60	**B**	**D**	**1**	**1**	**P01**
	LA63MG6	2.30	2.30	O. R.	43	54	10 500	3.7	3.60	**B**	**E**	**1**	**1**	**P01**
71	LA71MG6 [1]	2.10	2.10	O. R.	43	54	10 500	5.5	4.30	**C**	**D**	**1**	**1**	**P01**
	LA71MH6 [1]	2.30	2.20	O. R.	43	54	10 500	8.0	5.30	**C**	**E**	**1**	**1**	**P01**
100	LE100LD6 [2]	2.10	2.50	2.30	62	74	O. R.	65.0	22.00	**F**	**M**	**2**	**1**	**P01**
112	LE112MB6 [2]	2.30	2.60	2.50	60	72	O. R.	92.0	29.00	**G**	**G**	**2**	**1**	**P01**
132	LE132SB6 [2]	1.90	2.30	2.00	67	79	O. R.	170.0	39.00	**H**	**E**	**2**	**1**	**P01**
	LE132MA6 [2]	2.00	2.40	2.20	67	79	O. R.	210.0	45.00	**H**	**H**	**2**	**1**	**P01**
	LE132MJ6 [2]	2.40	2.60	2.60	67	79	O. R.	270.0	55.00	**H**	**K**	**2**	**1**	**P01**
160	LE160ML6 [2]	2.20	2.90	2.40	70	82	O. R.	560.0	83.00	**J**	**H**	**2**	**1**	**P01**
	LE160LN6 [2]	1.90	2.70	2.00	70	82	O. R.	780.0	106.00	**J**	**U**	**2**	**1**	**P01**
8-pole, 900 rpm at 60 Hz, 60 Hz power														
71	LA71MH8	1.90	1.70	O. R.	39	50	O. R.	8.0	5.30	**C**	**E**	**1**	**1**	**P02**
	LA71MJ8	2.20	2.00	O. R.	39	51	O. R.	8.0	5.30	**C**	**F**	**1**	**1**	**P02**
100	LE100LA8	1.70	2.30	1.80	63	75	O. R.	56.0	17.00	**F**	**B**	**2**	**1**	**P02**
	LE100LK8	1.80	2.30	1.90	63	75	O. R.	78.0	22.00	**F**	**P**	**2**	**1**	**P02**
112	LE112MG8	1.60	2.00	1.70	66	78	O. R.	94.0	29.00	**G**	**J**	**2**	**1**	**P02**
132	LE132SL8	1.60	2.20	1.70	66	78	O. R.	190.0	37.00	**H**	**G**	**2**	**1**	**P02**
	LE132MJ8	1.70	2.30	1.80	66	78	O. R.	240.0	44.00	**H**	**K**	**2**	**1**	**P02**
160	LE160MD8	1.70	2.20	1.80	71	83	O. R.	440.0	60.00	**J**	**F**	**2**	**1**	**P02**
	LE160ML8	1.60	2.20	1.70	71	83	O. R.	560.0	72.00	**J**	**H**	**2**	**1**	**P02**
	LE160LN8	1.70	2.10	1.80	71	83	O. R.	770.0	91.00	**J**	**L**	**2**	**1**	**P02**

O. R. On request

[1] The technical specifications also apply to LAI63 and LAI71 motors (with IEC B14 flange) for worm geared motors S.
[2] Only as brake motor or motor for intermittent duty S3 - 75 %.

© Siemens AG 2017

Selection and ordering data (continued)

Frame size	Motor	P_{rated}	n_{rated}	T_{rated}	I_{rated} 400 V	cos φ	η 4/4 load	T_{Bk}/T_{rated}	Article No. Data position 9th	10th	11th	12th	Order code Power	No. poles
		kW	rpm	Nm	A	-	%	-						
4-pole, 2 610 rpm at 87 Hz power														
63	LA63MD4	0.15	2 530	0.57	0.64	0.54	63.00	2.9	**B**	**B**	**1**	**1**	**P91**	**-**
	LA63ME4 [1]	0.20	2 460	0.78	0.70	0.73	56.50	2.1	**B**	**C**	**1**	**1**	**P91**	**-**
	LA63MF4 [1]	0.30	2 460	1.16	0.97	0.76	59.00	2.0	**B**	**D**	**1**	**1**	**P91**	**-**
71	LA71MG4 [1]	0.45	2 460	1.75	1.40	0.78	59.50	1.9	**C**	**D**	**1**	**1**	**P91**	**-**
	LA71MH4 [1]	0.65	2 480	2.50	1.80	0.79	66.00	2.1	**C**	**E**	**1**	**1**	**P91**	**-**
	LA71ZML4	0.95	2 480	3.66	2.68	0.73	70.00	2.3	**C**	**H**	**1**	**1**	**P91**	**-**
80	LE80MB4	0.95	2 570	3.53	2.80	0.66	74.20	2.8	**D**	**B**	**2**	**1**	**P91**	**-**
	LE80MF4	1.30	2 550	4.87	3.50	0.71	75.50	2.5	**D**	**D**	**2**	**1**	**P92**	**-**
90	LE90SE4	1.90	2 540	7.14	4.70	0.71	82.20	2.6	**E**	**L**	**2**	**1**	**P92**	**-**
	LE90LD4	2.60	2 535	9.79	6.40	0.71	82.60	2.6	**E**	**N**	**2**	**1**	**P92**	**-**
100	LE100LB4	3.60	2 540	14.3	8.30	0.77	81.70	2.5	**F**	**L**	**2**	**1**	**P92**	**-**
	LE100LH4	5.00	2 540	18.8	10.80	0.80	83.80	2.7	**F**	**N**	**2**	**1**	**P92**	**-**
112	LE112ME4	6.50	2 550	24.3	13.60	0.81	85.30	2.8	**G**	**H**	**2**	**1**	**P92**	**-**
132	LE132SF4	9.00	2 560	33.6	19.20	0.79	85.70	2.9	**H**	**F**	**2**	**1**	**P92**	**-**
	LE132ME4	13.00	2 560	48.5	26.50	0.79	86.20	3.2	**H**	**J**	**2**	**1**	**P92**	**-**
	LE132ZMSA4	16.00	O. R.	O. R.	O. R.	O. R.	O. R.	O. R.	**H**	**V**	**2**	**1**	**P92**	**-**
160	LE160MD4	17.00	2 575	63	37.00	0.76	87.50	3.5	**J**	**P**	**2**	**1**	**P92**	**-**
	LE160LA4	26.00	2 575	96.4	49.00	0.78	88.80	3.8	**J**	**S**	**2**	**1**	**P92**	**-**
6-pole, 1 740 rpm at 87 Hz power														
63	LA63MF6 [1]	0.15	1 590	0.9	0.75	0.65	44.50	2.1	**B**	**D**	**1**	**1**	**P91**	**P01**
	LA63MG6	0.20	O. R.	O. R.	O. R.	O. R.	O. R.	O. R.	**B**	**E**	**1**	**1**	**P91**	**P01**
71	LA71MG6 [1]	0.30	1 580	1.81	1.05	0.70	59.00	2.1	**C**	**D**	**1**	**1**	**P91**	**P01**
	LA71MH6 [1]	0.45	1 570	2.74	1.40	0.75	62.00	2.1	**C**	**E**	**1**	**1**	**P91**	**P01**
100	LE100LD6	2.60	1 680	14.8	6.90	0.70	77.20	2.2	**F**	**M**	**2**	**1**	**P92**	**P01**
112	LE112MB6	3.80	1 680	21.6	9.30	0.72	82.00	2.6	**G**	**G**	**2**	**1**	**P92**	**P01**
132	LE132SB6	5.00	1 695	28.2	12.70	0.69	82.60	2.7	**H**	**E**	**2**	**1**	**P92**	**P01**
	LE132MA6	7.00	1 695	39.4	15.40	0.72	84.80	2.7	**H**	**H**	**2**	**1**	**P92**	**P01**
	LE132MJ6	9.00	1 695	50.7	21.00	0.72	85.80	3.0	**H**	**K**	**2**	**1**	**P92**	**P01**
160	LE160ML6	13.00	1 710	72.6	28.50	0.70	86.90	3.1	**J**	**H**	**2**	**1**	**P92**	**P01**
	LE160LN6	17.00	1 710	94.9	37.50	0.74	88.70	3.0	**J**	**U**	**2**	**1**	**P92**	**P01**
8-pole, 1 305 rpm at 87 Hz power														
71	LA71MH8	0.15	1 185	1.21	0.60	0.67	54.00	1.9	**C**	**E**	**1**	**1**	**P92**	**P02**
	LA71MJ8	0.20	1 200	1.59	0.85	0.63	54.00	2.2	**C**	**F**	**1**	**1**	**P92**	**P02**
100	LE100LA8	1.30	1 265	9.81	5.10	0.55	67.40	2.2	**F**	**B**	**2**	**1**	**P92**	**P02**
	LE100LK8	1.90	1 265	14.3	6.60	0.57	72.50	2.3	**F**	**P**	**2**	**1**	**P92**	**P02**
112	LE112MG8	2.60	1 255	19.8	8.00	0.61	77.20	1.9	**G**	**J**	**2**	**1**	**P92**	**P02**
132	LE132SL8	3.60	1 275	27	10.80	0.62	81.90	2.4	**H**	**G**	**2**	**1**	**P92**	**P02**
	LE132MJ8	5.00	1 270	37.6	13.90	0.63	82.40	2.3	**H**	**K**	**2**	**1**	**P92**	**P02**
160	LE160MD8	7.00	1 280	52.2	19.90	0.64	79.30	2.3	**J**	**F**	**2**	**1**	**P92**	**P02**
	LE160ML8	9.00	1 275	67.4	25.50	0.65	82.70	2.2	**J**	**H**	**2**	**1**	**P92**	**P02**
	LE160LN8	13.00	1 275	97.4	34.00	0.67	85.20	2.2	**J**	**L**	**2**	**1**	**P92**	**P02**

O. R. On request

[1] The technical specifications also apply to LAI63 and LAI71 motors (with IEC B14 flange) for worm geared motors S.

© Siemens AG 2017

Selection and ordering data (continued)

Frame size	Motor	L_{pfA}	L_{WA}	J_{mot}	m_{mot}	Article No. Data position 9th	10th	11th	12th	Order code Power	No. poles
		dB (A)	dB (A)	10^{-4} kgm²	kg						
4-pole, 2 610 rpm at 87 Hz power											
63	LA63MD4	O. R.	O. R.	2.9	3.20	**B**	**B**	**1**	**1**	**P91**	**-**
	LA63ME4 [1]	O. R.	O. R.	2.9	3.20	**B**	**C**	**1**	**1**	**P91**	**-**
	LA63MF4 [1]	O. R.	O. R.	3.7	3.60	**B**	**D**	**1**	**1**	**P91**	**-**
71	LA71MG4 [1]	O. R.	O. R.	5.2	4.30	**C**	**D**	**1**	**1**	**P91**	**-**
	LA71MH4 [1]	O. R.	O. R.	7.7	5.80	**C**	**E**	**1**	**1**	**P91**	**-**
	LA71ZML4	O. R.	O. R.	11.0	8.10	**C**	**H**	**1**	**1**	**P91**	**-**
80	LE80MB4	O. R.	O. R.	O. R.	O. R.	**D**	**B**	**2**	**1**	**P91**	**-**
	LE80MF4	O. R.	O. R.	O. R.	O. R.	**D**	**D**	**2**	**1**	**P92**	**-**
90	LE90SE4	O. R.	O. R.	O. R.	O. R.	**E**	**L**	**2**	**1**	**P92**	**-**
	LE90LD4	O. R.	O. R.	O. R.	O. R.	**E**	**N**	**2**	**1**	**P92**	**-**
100	LE100LB4	O. R.	O. R.	59.0	21.00	**F**	**L**	**2**	**1**	**P92**	**-**
	LE100LH4	O. R.	O. R.	78.0	25.00	**F**	**N**	**2**	**1**	**P92**	**-**
112	LE112ME4	O. R.	O. R.	100.0	31.00	**G**	**H**	**2**	**1**	**P92**	**-**
132	LE132SF4	O. R.	O. R.	190.0	44.00	**H**	**F**	**2**	**1**	**P92**	**-**
	LE132ME4	O. R.	O. R.	240.0	51.00	**H**	**J**	**2**	**1**	**P92**	**-**
	LE132ZMSA4	O. R.	O. R.	330.0	O. R.	**H**	**V**	**2**	**1**	**P92**	**-**
160	LE160MD4	O. R.	O. R.	440.0	73.00	**J**	**P**	**2**	**1**	**P92**	**-**
	LE160LA4	O. R.	O. R.	560.0	84.00	**J**	**S**	**2**	**1**	**P92**	**-**
6-pole, 1 740 rpm at 87 Hz power											
63	LA63MF6 [1]	O. R.	O. R.	3.7	3.60	**B**	**D**	**1**	**1**	**P91**	**P01**
	LA63MG6	O. R.	O. R.	3.7	3.60	**B**	**E**	**1**	**1**	**P91**	**P01**
71	LA71MG6 [1]	O. R.	O. R.	5.5	4.30	**C**	**D**	**1**	**1**	**P91**	**P01**
	LA71MH6 [1]	O. R.	O. R.	8.0	5.30	**C**	**E**	**1**	**1**	**P91**	**P01**
100	LE100LD6	O. R.	O. R.	65.0	22.00	**F**	**M**	**2**	**1**	**P92**	**P01**
112	LE112MB6	O. R.	O. R.	92.0	29.00	**G**	**G**	**2**	**1**	**P92**	**P01**
132	LE132SB6	O. R.	O. R.	170.0	39.00	**H**	**E**	**2**	**1**	**P92**	**P01**
	LE132MA6	O. R.	O. R.	210.0	45.00	**H**	**H**	**2**	**1**	**P92**	**P01**
	LE132MJ6	O. R.	O. R.	270.0	55.00	**H**	**K**	**2**	**1**	**P92**	**P01**
160	LE160ML6	O. R.	O. R.	560.0	83.00	**J**	**H**	**2**	**1**	**P92**	**P01**
	LE160LN6	O. R.	O. R.	780.0	106.00	**J**	**U**	**2**	**1**	**P92**	**P01**
8-pole, 1 305 rpm at 87 Hz power											
71	LA71MH8	O. R.	O. R.	8.0	5.30	**C**	**E**	**1**	**1**	**P92**	**P02**
	LA71MJ8	O. R.	O. R.	8.0	5.30	**C**	**F**	**1**	**1**	**P92**	**P02**
100	LE100LA8	O. R.	O. R.	56.0	17.00	**F**	**B**	**2**	**1**	**P92**	**P02**
	LE100LK8	O. R.	O. R.	78.0	22.00	**F**	**P**	**2**	**1**	**P92**	**P02**
112	LE112MG8	O. R.	O. R.	94.0	29.00	**G**	**J**	**2**	**1**	**P92**	**P02**
132	LE132SL8	O. R.	O. R.	190.0	37.00	**H**	**G**	**2**	**1**	**P92**	**P02**
	LE132MJ8	O. R.	O. R.	240.0	44.00	**H**	**K**	**2**	**1**	**P92**	**P02**
160	LE160MD8	O. R.	O. R.	440.0	60.00	**J**	**F**	**2**	**1**	**P92**	**P02**
	LE160ML8	O. R.	O. R.	560.0	72.00	**J**	**H**	**2**	**1**	**P92**	**P02**
	LE160LN8	O. R.	O. R.	770.0	91.00	**J**	**L**	**2**	**1**	**P92**	**P02**

O. R. On request

[1] The technical specifications also apply to LAI63 and LAI71 motors (with IEC B14 flange) for worm geared motors S.

© Siemens AG 2017

Selection and ordering data

Frame size	Motor	P_{rated}	n_{rated}	T_{rated}	I_{rated}	cos φ	η		Efficiency class	I_{St}/I_{rated}	Article No.				Order code
					400 V		4/4 load	3/4 load	acc. to IEC		Data position				No. poles
		kW	rpm	Nm	A	-	%	%	60034-30	-	9th	10th	11th	12th	
4-pole, 1 500 rpm at 50 Hz															
80	LE80MD4E	0.55	1 440	3.65	1.39	0.74	77.10	76.80	-	5.30	**D**	**C**	**2**	**2**	**-**
	LE80MH4E	0.75	1 440	4.97	1.79	0.76	79.60	79.90	IE2	5.60	**D**	**E**	**2**	**2**	**-**
90	LE90SG4E	1.10	1 425	7.37	2.50	0.78	81.40	81.80	IE2	5.60	**E**	**K**	**2**	**2**	**-**
	LE90LH4E	1.50	1 435	9.98	3.30	0.79	82.80	83.50	IE2	6.40	**E**	**M**	**2**	**2**	**-**
100	LE100LE4E	2.20	1 455	14.4	4.65	0.81	84.30	85.10	IE2	6.90	**F**	**L**	**2**	**2**	**-**
	LE100LK4E	3.00	1 455	19.7	6.20	0.82	85.50	86.40	IE2	6.90	**F**	**M**	**2**	**2**	**-**
112	LE112ME4E	4.00	1 460	26.2	8.20	0.81	86.60	87.30	IE2	7.10	**G**	**H**	**2**	**2**	**-**
132	LE132SF4E	5.50	1 465	35.9	11.30	0.80	87.70	89.00	IE2	6.90	**H**	**G**	**2**	**2**	**-**
	LE132MF4E	7.50	1 465	48.9	14.70	0.83	88.70	90.30	IE2	6.90	**H**	**J**	**2**	**2**	**-**
	LE132ZMM4E	9.20	1 455	60.4	17.90	0.83	89.30	O. R.	IE2	7.10	**H**	**V**	**2**	**2**	**-**
160	LE160MF4E	11.00	1 470	71.5	21.00	0.85	89.80	90.90	IE2	6.70	**J**	**P**	**2**	**2**	**-**
	LE160LD4E	15.00	1 475	97.1	28.00	0.85	90.60	91.30	IE2	7.30	**J**	**U**	**2**	**2**	**-**
180	LES180MM4E	18.50	1 465	120.6	35.00	0.84	91.20	92.00	IE2	7.20	**K**	**L**	**3**	**2**	**-**
	LES180ZLJ4E	22.00	1 465	143.4	41.50	0.84	91.60	92.20	IE2	7.30	**K**	**N**	**3**	**2**	**-**
200	LES200LN4E	30.00	1 470	194.9	56.00	0.84	92.30	92.80	IE2	6.70	**L**	**M**	**3**	**2**	**-**
225	LES225SD4E	37.00	1 470	240.4	65.00	0.88	92.70	93.50	IE2	6.60	**M**	**F**	**3**	**2**	**-**
	LES225YMF4E	45.00	1 475	291	80.00	0.87	93.10	93.80	IE2	6.90	**M**	**T**	**3**	**2**	**-**
250	LES250MD4E	55.00	1 480	355	100.00	0.85	93.50	93.90	IE2	6.80	**N**	**M**	**3**	**2**	**-**
2-pole, 3 000 rpm at 50 Hz															
80	LE80MA2E	0.75	2 805	2.55	1.67	0.84	77.40	79.50	IE2	4.90	**D**	**B**	**2**	**2**	**P00**
	LE80ME2E	1.10	2 835	3.71	2.40	0.83	79.60	81.30	IE2	6.00	**D**	**M**	**2**	**2**	**P00**
90	LE90SG2E	1.50	2 885	4.96	3.15	0.84	81.30	82.30	IE2	6.90	**E**	**K**	**2**	**2**	**P00**
	LE90LH2E	2.20	2 890	7.27	4.50	0.85	83.20	83.90	IE2	7.10	**E**	**M**	**2**	**2**	**P00**
100	LE100LD2E	3.00	2 905	9.86	6.10	0.84	84.60	85.20	IE2	7.00	**F**	**K**	**2**	**2**	**P00**
112	LE112MA2E	4.00	2 950	12.9	7.80	0.86	85.80	86.70	IE2	7.40	**G**	**G**	**2**	**2**	**P00**
132	LE132SB2E	5.50	2 950	17.8	10.50	0.87	87.00	88.00	IE2	6.60	**H**	**E**	**2**	**2**	**P00**
	LE132SF2E	7.50	2 950	24.3	14.10	0.87	88.10	88.70	IE2	7.50	**H**	**G**	**2**	**2**	**P00**
160	LE160MB2E	11.00	2 955	35.5	20.50	0.87	89.40	90.00	IE2	7.40	**J**	**N**	**2**	**2**	**P00**
	LE160MG2E	15.00	2 955	48.5	27.00	0.88	90.30	90.90	IE2	7.60	**J**	**Q**	**2**	**2**	**P00**
	LE160LB2E	18.50	2 955	59.8	33.50	0.88	90.90	91.20	IE2	7.90	**J**	**T**	**2**	**2**	**P00**
6-pole, 1 000 rpm at 50 Hz															
80	LE80MD6E	0.37	925	3.82	1.08	0.69	71.40	71.50	-	4.00	**D**	**C**	**2**	**2**	**P01**
	LE80MK6E	0.55	935	5.62	1.63	0.66	74.00	74.00	-	4.40	**D**	**F**	**2**	**2**	**P01**
90	LE90SH6E	0.75	935	7.66	2.05	0.70	75.90	76.00	IE2	4.10	**E**	**C**	**2**	**2**	**P01**
	LE90LLB6E	1.10	935	11.2	2.90	0.70	78.10	78.60	IE2	4.40	**E**	**P**	**2**	**2**	**P01**
100	LE100LLB6E	1.50	970	14.8	3.70	0.73	79.80	80.50	IE2	5.40	**F**	**P**	**2**	**2**	**P01**
112	LE112ME6E	2.20	965	21.8	5.20	0.75	81.80	82.60	IE2	5.00	**G**	**H**	**2**	**2**	**P01**
132	LE132SC6E	3.00	970	29.5	7.20	0.72	83.30	83.40	IE2	5.00	**H**	**F**	**2**	**2**	**P01**
	LE132MB6E	4.00	970	39.4	9.10	0.75	84.60	85.50	IE2	5.00	**H**	**H**	**2**	**2**	**P01**
	LE132MJ6E	5.50	970	54.1	12.10	0.76	86.00	87.00	IE2	5.60	**H**	**L**	**2**	**2**	**P01**
160	LE160ML6E	7.50	975	73.5	16.80	0.74	87.20	88.00	IE2	4.70	**J**	**H**	**2**	**2**	**P01**
	LE160LL6E	11.00	975	107.7	23.50	0.76	88.70	89.60	IE2	4.80	**J**	**V**	**2**	**2**	**P01**
180	LES180LE6E	15.00	975	146.9	31.00	0.78	89.70	90.10	IE2	6.00	**K**	**M**	**3**	**2**	**P01**
200	LES200LG6E	18.50	978	180.6	36.00	0.82	90.40	91.30	IE2	5.80	**L**	**L**	**3**	**2**	**P01**
	LES200LP6E	22.00	978	214.8	42.50	0.82	90.90	91.60	IE2	6.20	**L**	**N**	**3**	**2**	**P01**
225	LES225YMF6E	30.00	980	292	57.00	0.83	91.70	92.50	IE2	6.10	**M**	**K**	**3**	**2**	**P01**
250	LES250MD6E	37.00	982	360	70.00	0.83	92.20	93.10	IE2	6.00	**N**	**D**	**3**	**2**	**P01**
8-pole, 750 rpm at 50 Hz															
180	LES180LE8E	11.00	720	145.9	26.00	0.70	86.60	87.60	-	4.90	**K**	**M**	**3**	**2**	**P02**
200	LES200LP8E	15.00	718	199.5	32.00	0.76	88.90	90.80	-	5.40	**L**	**N**	**3**	**2**	**P02**
225	LES225SD8E	18.50	730	242	38.50	0.78	89.00	89.90	-	5.40	**M**	**F**	**3**	**2**	**P02**
	LES225MD8E	22.00	730	288	44.00	0.80	90.30	91.30	-	5.50	**M**	**G**	**3**	**2**	**P02**
250	LES250MD8E	30.00	732	391	59.00	0.80	91.30	92.20	-	5.60	**N**	**D**	**3**	**2**	**P02**

O. R. On request

© Siemens AG 2017

Selection and ordering data (continued)

Frame size	Motor	T_{St}/T_{rated}	T_{Bk}/T_{rated}	T_A/T_{rated}	L_{pfA}	L_{WA}	Z_0	J_{mot}	m_{mot}	Article No. Data position 9th 10th 11th 12th				Order code No. poles
		-	-	-	dB (A)	dB (A)	1/h	10^{-4} kgm²	kg					
4-pole, 1 500 rpm at 50 Hz														
80	LE80MD4E	2.20	3.10	2.40	53	64	9 000	17	9.30	**D**	**C**	**2**	**2**	**-**
	LE80MH4E	2.20	3.10	2.40	53	64	9 000	21	10.00	**D**	**E**	**2**	**2**	**-**
90	LE90SG4E	2.30	2.90	2.50	56	68	10 000	28	12.00	**E**	**K**	**2**	**2**	**-**
	LE90LH4E	2.60	3.40	2.80	56	68	10 000	36	15.00	**E**	**M**	**2**	**2**	**-**
100	LE100LE4E	2.10	3.30	2.30	60	72	6 000	86	20.00	**F**	**L**	**2**	**2**	**-**
	LE100LK4E	2.00	3.10	2.20	60	72	6 000	110	24.00	**F**	**M**	**2**	**2**	**-**
112	LE112ME4E	2.50	3.20	2.70	58	70	5 000	140	24.00	**G**	**H**	**2**	**2**	**-**
132	LE132SF4E	2.30	2.90	2.50	64	76	3 000	270	35.00	**H**	**G**	**2**	**2**	**-**
	LE132MF4E	2.30	2.90	2.50	64	76	3 000	340	42.00	**H**	**J**	**2**	**2**	**-**
	LE132ZMM4E	2.30	3.10	O. R.	64	76	1 600	410	O. R.	**H**	**V**	**2**	**2**	**-**
160	LE160MF4E	2.10	2.80	2.30	65	77	2 000	650	61.00	**J**	**P**	**2**	**2**	**-**
	LE160LD4E	2.30	3.00	2.50	65	77	2 000	830	73.00	**J**	**U**	**2**	**2**	**-**
180	LES180MM4E	2.50	3.40	O. R.	58	71	O. R.	1 200	151.00	**K**	**L**	**3**	**2**	**-**
	LES180ZLJ4E	2.60	3.50	O. R.	58	71	O. R.	1 300	156.00	**K**	**N**	**3**	**2**	**-**
200	LES200LN4E	2.50	3.30	O. R.	62	75	O. R.	2 000	211.00	**L**	**M**	**3**	**2**	**-**
225	LES225SD4E	2.30	2.90	2.00	62	75	O. R.	4 200	280.00	**M**	**F**	**3**	**2**	**-**
	LES225YMF4E	2.50	3.10	2.10	63	76	O. R.	4 600	305.00	**M**	**T**	**3**	**2**	**-**
250	LES250MD4E	2.70	3.00	2.10	62	75	O. R.	7 500	385.00	**N**	**M**	**3**	**2**	**-**
2-pole, 3 000 rpm at 50 Hz														
80	LE80MA2E	1.90	2.30	2.00	60	71	6 000	8	8.30	**D**	**B**	**2**	**2**	**P00**
	LE80ME2E	2.70	3.10	2.90	60	71	6 000	11	10.00	**D**	**M**	**2**	**2**	**P00**
90	LE90SG2E	2.70	3.60	2.90	65	77	5 000	17	12.00	**E**	**K**	**2**	**2**	**P00**
	LE90LH2E	2.50	3.70	2.70	65	77	5 000	21	14.00	**E**	**M**	**2**	**2**	**P00**
100	LE100LD2E	2.30	3.30	2.50	67	79	3 000	44	21.00	**F**	**K**	**2**	**2**	**P00**
112	LE112MA2E	2.40	3.30	2.60	69	81	2 000	92	22.00	**G**	**G**	**2**	**2**	**P00**
132	LE132SB2E	1.80	2.90	1.90	68	80	1 000	200	32.00	**H**	**E**	**2**	**2**	**P00**
	LE132SF2E	2.20	3.10	2.40	68	80	1 000	240	36.00	**H**	**G**	**2**	**2**	**P00**
160	LE160MB2E	2.10	3.20	2.30	70	82	600	450	57.00	**J**	**N**	**2**	**2**	**P00**
	LE160MG2E	2.40	3.40	2.60	70	82	600	530	65.00	**J**	**Q**	**2**	**2**	**P00**
	LE160LB2E	2.90	3.60	3.10	70	82	600	610	74.00	**J**	**T**	**2**	**2**	**P00**
6-pole, 1 000 rpm at 50 Hz														
80	LE80MD6E	2.10	2.40	2.30	42	53	12 000	17	8.30	**D**	**C**	**2**	**2**	**P01**
	LE80MK6E	2.50	2.90	2.70	42	53	12 000	25	11.30	**D**	**F**	**2**	**2**	**P01**
90	LE90SH6E	2.00	2.50	2.20	43	55	10 000	30	12.00	**E**	**C**	**2**	**2**	**P01**
	LE90LLB6E	2.20	2.60	2.40	43	55	10 000	40	15.00	**E**	**P**	**2**	**2**	**P01**
100	LE100LLB6E	2.00	2.80	O. R.	59	71	9 000	110	24.00	**F**	**P**	**2**	**2**	**P01**
112	LE112ME6E	2.00	2.80	O. R.	62	74	8 000	140	24.00	**G**	**H**	**2**	**2**	**P01**
132	LE132SC6E	1.60	2.50	O. R.	63	75	6 000	240	31.00	**H**	**F**	**2**	**2**	**P01**
	LE132MB6E	1.60	2.30	O. R.	63	75	6 000	290	36.00	**H**	**H**	**2**	**2**	**P01**
	LE132MJ6E	1.90	2.60	O. R.	63	75	5 000	370	45.00	**H**	**L**	**2**	**2**	**P01**
160	LE160ML6E	1.90	2.20	O. R.	67	79	4 000	750	67.00	**J**	**H**	**2**	**2**	**P01**
	LE160LL6E	1.90	2.20	O. R.	67	79	4 000	980	83.00	**J**	**V**	**2**	**2**	**P01**
180	LES180LE6E	2.50	3.10	O. R.	56	70	O. R.	1 700	141.00	**K**	**M**	**3**	**2**	**P01**
200	LES200LG6E	2.40	2.60	O. R.	58	72	O. R.	2 500	181.00	**L**	**L**	**3**	**2**	**P01**
	LES200LP6E	2.50	2.60	O. R.	58	72	O. R.	3 000	201.00	**L**	**N**	**3**	**2**	**P01**
225	LES225YMF6E	2.50	2.80	2.00	56	70	O. R.	5 800	285.00	**M**	**K**	**3**	**2**	**P01**
250	LES250MD6E	2.80	2.50	2.00	57	71	O. R.	8 600	370.00	**N**	**D**	**3**	**2**	**P01**
8-pole, 750 rpm at 50 Hz														
180	LES180LE8E	2.30	2.60	O. R.	67	74	O. R.	1 950	155.00	**K**	**M**	**3**	**2**	**P02**
200	LES200LP8E	2.40	2.80	O. R.	57	64	O. R.	3 440	220.00	**L**	**N**	**3**	**2**	**P02**
225	LES225SD8E	2.20	2.70	1.80	53	66	O. R.	4 300	250.00	**M**	**F**	**3**	**2**	**P02**
	LES225MD8E	2.30	2.70	1.90	53	66	O. R.	5 000	270.00	**M**	**G**	**3**	**2**	**P02**
250	LES250MD8E	2.40	2.70	1.90	58	72	O. R.	8 600	370.00	**N**	**D**	**3**	**2**	**P02**

O. R. On request

© Siemens AG 2017

Selection and ordering data (continued)

Frame size	Motor	P_{rated}	n_{rated}	T_{rated}	I_{rated}	cos φ	η		Efficiency class	I_{St}/I_{rated}	Article No.				Order code
					460 V		4/4 load	3/4 load	acc. to IEC		Data position				No. poles
		kW	rpm	Nm	A	-	%	%	60034-30	-	9th	10th	11th	12th	
4-pole, 1 800 rpm at 60 Hz, 50 Hz power															
80	LE80MD4E	0.55	1 750	3	1.29	0.71	75.50	74.60	-	6.40	**D**	**C**	**2**	**2**	**-**
	LE80MH4E	0.75	1 750	4.09	1.68	0.72	78.00	77.40	IE2	6.80	**D**	**E**	**2**	**2**	**-**
90	LE90SG4E	1.10	1 740	6.04	2.20	0.74	84.00	83.70	IE2	7.00	**E**	**K**	**2**	**2**	**-**
	LE90LH4E	1.50	1 745	8.21	3.00	0.75	84.00	84.00	IE2	7.50	**E**	**M**	**2**	**2**	**-**
100	LE100LE4E	2.20	1 760	11.9	4.05	0.78	87.50	88.30	IE2	8.10	**F**	**L**	**2**	**2**	**-**
	LE100LK4E	3.00	1 765	16.2	5.40	0.79	87.50	86.00	IE2	8.30	**F**	**M**	**2**	**2**	**-**
112	LE112ME4E	3.70	1 770	20	6.90	0.77	87.50	87.00	IE2	8.70	**G**	**H**	**2**	**2**	**-**
132	LE132SF4E	5.50	1 770	29.7	9.90	0.78	89.50	89.60	IE2	8.00	**H**	**G**	**2**	**2**	**-**
	LE132MF4E	7.50	1 770	40.5	12.80	0.82	89.50	90.30	IE2	8.00	**H**	**J**	**2**	**2**	**-**
	LE132ZMM4E	9.20	1 760	49.9	15.50	0.82	89.50	O. R.	IE2	8.10	**H**	**V**	**2**	**2**	**-**
160	LE160MF4E	11.00	1 775	59.2	18.10	0.84	91.00	91.30	IE2	7.70	**J**	**P**	**2**	**2**	**-**
	LE160LD4E	15.00	1 780	80.5	24.50	0.84	91.00	90.70	IE2	8.50	**J**	**U**	**2**	**2**	**-**
180	LES180MM4E	18.50	1 770	99.8	30.50	0.83	92.40	92.60	IE2	7.70	**K**	**L**	**3**	**2**	**-**
	LES180ZLJ4E	22.00	1 770	118.7	36.00	0.83	92.40	92.50	IE2	8.40	**K**	**N**	**3**	**2**	**-**
200	LES200LN4E	30.00	1 778	161.1	48.00	0.84	93.00	92.90	IE2	8.20	**L**	**M**	**3**	**2**	**-**
225	LES225SD4E	37.00	1 778	198.7	57.00	0.87	93.00	93.20	IE2	7.20	**M**	**F**	**3**	**2**	**-**
	LES225YMF4E	45.00	1 778	241.7	70.00	0.86	93.60	93.80	IE2	7.60	**M**	**T**	**3**	**2**	**-**
250	LES250MD4E	55.00	1 785	294	87.00	0.84	94.10	94.10	IE2	7.30	**N**	**M**	**3**	**2**	**-**
2-pole, 3 600 rpm at 60 Hz, 50 Hz power															
80	LE80MA2E	0.75	3 445	2.08	1.50	0.83	75.50	75.50	IE2	6.00	**D**	**B**	**2**	**2**	**P00**
	LE80ME2E	1.10	3 465	3.03	2.05	0.82	82.50	82.50	IE2	6.80	**D**	**M**	**2**	**2**	**P00**
90	LE90SG2E	1.50	3 505	4.09	2.75	0.82	84.00	84.00	IE2	8.50	**E**	**K**	**2**	**2**	**P00**
	LE90LH2E	2.20	3 510	5.99	3.90	0.83	85.50	85.50	IE2	8.70	**E**	**M**	**2**	**2**	**P00**
100	LE100LD2E	3.00	3 520	8.14	5.20	0.83	87.50	87.30	IE2	8.10	**F**	**K**	**2**	**2**	**P00**
112	LE112MA2E	3.70	3 565	9.91	6.30	0.84	87.50	87.40	IE2	9.30	**G**	**G**	**2**	**2**	**P00**
132	LE132SB2E	5.50	3 555	14.8	9.10	0.86	88.50	88.30	IE2	7.60	**H**	**E**	**2**	**2**	**P00**
	LE132SF2E	7.50	3 560	20.1	12.10	0.87	89.50	89.60	IE2	8.20	**H**	**G**	**2**	**2**	**P00**
160	LE160MB2E	11.00	3 560	29.5	17.80	0.86	90.20	89.60	IE2	8.20	**J**	**N**	**2**	**2**	**P00**
	LE160MG2E	15.00	3 565	40.2	24.00	0.87	90.20	89.90	IE2	8.40	**J**	**Q**	**2**	**2**	**P00**
	LE160LB2E	18.50	3 565	49.6	29.50	0.87	91.00	90.50	IE2	8.90	**J**	**T**	**2**	**2**	**P00**
6-pole, 1 200 rpm at 60 Hz, 50 Hz power															
80	LE80MD6E	0.37	1 140	3.1	0.98	0.63	75.30	74.10	-	4.60	**D**	**C**	**2**	**2**	**P01**
	LE80MK6E	0.55	1 135	4.63	1.47	0.61	77.00	77.50	-	5.20	**D**	**F**	**2**	**2**	**P01**
90	LE90SH6E	0.75	1 145	6.25	1.98	0.65	73.00	O. R.	IE1	4.50	**E**	**C**	**2**	**2**	**P01**
	LE90LLB6E	1.10	1 145	9.17	2.80	0.66	75.00	O. R.	IE1	4.80	**E**	**P**	**2**	**2**	**P01**
100	LE100LLB6E	1.50	1 175	12.2	3.15	0.69	86.50	86.30	IE2	6.40	**F**	**P**	**2**	**2**	**P01**
112	LE112ME6E	2.20	1 170	18	4.30	0.73	87.50	87.30	IE2	6.30	**G**	**H**	**2**	**2**	**P01**
132	LE132SC6E	3.00	1 175	24.4	6.20	0.69	87.50	87.10	IE2	6.00	**H**	**F**	**2**	**2**	**P01**
	LE132MB6E	3.70	1 180	29.9	7.50	0.71	87.50	87.50	IE2	6.20	**H**	**H**	**2**	**2**	**P01**
	LE132MJ6E	5.50	1 175	44.7	10.60	0.73	89.50	89.80	IE2	6.50	**H**	**L**	**2**	**2**	**P01**
160	LE160ML6E	7.50	1 180	60.7	14.40	0.73	89.50	89.60	IE2	5.40	**J**	**H**	**2**	**2**	**P01**
	LE160LL6E	11.00	1 180	89	20.50	0.74	90.20	90.50	IE2	5.50	**J**	**V**	**2**	**2**	**P01**
180	LES180LE6E	15.00	1 178	121.6	27.00	0.77	90.20	90.20	IE2	6.90	**K**	**M**	**3**	**2**	**P01**
200	LES200LG6E	18.50	1 182	149.5	31.50	0.81	91.70	92.10	IE2	6.70	**L**	**L**	**3**	**2**	**P01**
	LES200LP6E	22.00	1 182	177.7	37.00	0.81	91.70	92.10	IE2	7.40	**L**	**N**	**3**	**2**	**P01**
225	LES225YMF6E	30.00	1 182	242.4	49.00	0.83	93.00	93.30	IE2	7.00	**M**	**K**	**3**	**2**	**P01**
250	LES250MD6E	37.00	1 185	298	60.00	0.83	93.00	93.30	IE2	7.30	**N**	**D**	**3**	**2**	**P01**
8-pole, 900 rpm at 60 Hz, 50 Hz power															
180	LES180LE8E	11.00	875	120	O. R.	0.69	88.50	88.80	-	5.60	**K**	**M**	**3**	**2**	**P02**
200	LES200LP8E	15.00	875	163.7	O. R.	0.74	89.50	90.70	-	6.30	**L**	**N**	**3**	**2**	**P02**
225	LES225SD8E	18.50	885	199.6	38.50	0.75	89.50	89.70	-	6.30	**M**	**F**	**3**	**2**	**P02**
	LES225MD8E	22.00	885	237.4	45.00	0.78	91.00	91.30	-	6.40	**M**	**G**	**3**	**2**	**P02**
250	LES250MD8E	30.00	885	324	60.00	0.79	91.00	91.30	-	6.40	**N**	**D**	**3**	**2**	**P02**

O. R. On request

© Siemens AG 2017

Selection and ordering data (continued)

Frame size	Motor	T_{St}/T_{rated}	T_{Bk}/T_{rated}	T_A/T_{rated}	L_{pfA}	L_{WA}	Z_0	J_{mot}	m_{mot}	Article No. Data position 9th	10th	11th	12th	Order code No. poles
		-	-	-	dB (A)	dB (A)	1/h	10^{-4} kgm²	kg					
4-pole, 1 800 rpm at 60 Hz, 50 Hz power														
80	LE80MD4E	2.70	3.80	3.00	55	66	7 000	17	9.30	**D**	**C**	**2**	**2**	**-**
	LE80MH4E	2.50	3.80	2.80	55	66	7 000	21	10.00	**D**	**E**	**2**	**2**	**-**
90	LE90SG4E	2.70	3.60	3.00	58	70	8 000	28	12.00	**E**	**K**	**2**	**2**	**-**
	LE90LH4E	2.90	4.00	3.20	58	70	8 000	36	15.00	**E**	**M**	**2**	**2**	**-**
100	LE100LE4E	2.50	3.90	2.80	62	74	5 000	86	20.00	**F**	**L**	**2**	**2**	**-**
	LE100LK4E	2.40	3.70	2.60	62	74	5 000	110	24.00	**F**	**M**	**2**	**2**	**-**
112	LE112ME4E	3.00	4.00	O. R.	62	74	5 000	140	24.00	**G**	**H**	**2**	**2**	**-**
132	LE132SF4E	2.60	3.30	O. R.	68	80	3 000	270	35.00	**H**	**G**	**2**	**2**	**-**
	LE132MF4E	2.70	3.40	O. R.	68	80	3 000	340	42.00	**H**	**J**	**2**	**2**	**-**
	LE132ZMM4E	2.50	3.60	O. R.	64	76	1 600	410	O. R.	**H**	**V**	**2**	**2**	**-**
160	LE160MF4E	2.50	3.20	O. R.	69	81	2 000	650	61.00	**J**	**P**	**2**	**2**	**-**
	LE160LD4E	2.60	3.40	O. R.	69	81	2 000	830	73.00	**J**	**U**	**2**	**2**	**-**
180	LES180MM4E	2.80	3.90	O. R.	61	74	O. R.	1 200	151.00	**K**	**L**	**3**	**2**	**-**
	LES180ZLJ4E	3.00	3.90	O. R.	62	74	O. R.	1 300	156.00	**K**	**N**	**3**	**2**	**-**
200	LES200LN4E	3.20	3.70	O. R.	67	80	O. R.	2 000	211.00	**L**	**M**	**3**	**2**	**-**
225	LES225SD4E	2.70	3.30	2.30	66	80	O. R.	4 200	280.00	**M**	**F**	**3**	**2**	**-**
	LES225YMF4E	3.00	3.50	2.40	67	80	O. R.	4 600	305.00	**M**	**T**	**3**	**2**	**-**
250	LES250MD4E	3.10	3.30	2.40	66	80	O. R.	7 500	385.00	**N**	**M**	**3**	**2**	**-**
2-pole, 3 600 rpm at 60 Hz, 50 Hz power														
80	LE80MA2E	2.10	3.00	O. R.	64	75	3 000	8	8.30	**D**	**B**	**2**	**2**	**P00**
	LE80ME2E	2.20	3.20	O. R.	64	75	3 000	11	10.00	**D**	**M**	**2**	**2**	**P00**
90	LE90SG2E	3.10	4.50	O. R.	69	81	2 000	17	12.00	**E**	**K**	**2**	**2**	**P00**
	LE90LH2E	3.00	4.60	O. R.	69	81	2 000	21	14.00	**E**	**M**	**2**	**2**	**P00**
100	LE100LD2E	2.60	3.80	O. R.	71	83	2 000	44	21.00	**F**	**K**	**2**	**2**	**P00**
112	LE112MA2E	2.90	4.00	O. R.	73	85	1 300	92	22.00	**G**	**G**	**2**	**2**	**P00**
132	LE132SB2E	2.00	3.30	O. R.	72	84	800	200	32.00	**H**	**E**	**2**	**2**	**P00**
	LE132SF2E	2.30	3.60	O. R.	72	84	800	240	36.00	**H**	**G**	**2**	**2**	**P00**
160	LE160MB2E	2.40	3.60	O. R.	77	89	500	450	57.00	**J**	**N**	**2**	**2**	**P00**
	LE160MG2E	2.80	3.90	O. R.	77	89	500	530	65.00	**J**	**Q**	**2**	**2**	**P00**
	LE160LB2E	3.30	4.10	O. R.	77	89	500	610	74.00	**J**	**T**	**2**	**2**	**P00**
6-pole, 1 200 rpm at 60 Hz, 50 Hz power														
80	LE80MD6E	2.30	2.90	O. R.	45	56	8 400	17	8.30	**D**	**C**	**2**	**2**	**P01**
	LE80MK6E	2.90	3.60	O. R.	45	56	8 400	25	11.30	**D**	**F**	**2**	**2**	**P01**
90	LE90SH6E	2.20	3.00	O. R.	46	58	7 000	30	12.00	**E**	**C**	**2**	**2**	**P01**
	LE90LLB6E	2.40	3.10	O. R.	46	58	7 000	40	15.00	**E**	**P**	**2**	**2**	**P01**
100	LE100LLB6E	2.20	3.20	O. R.	62	74	6 300	110	24.00	**F**	**P**	**2**	**2**	**P01**
112	LE112ME6E	2.10	3.20	O. R.	65	77	5 600	140	24.00	**G**	**H**	**2**	**2**	**P01**
132	LE132SC6E	1.80	2.90	O. R.	67	79	4 200	240	31.00	**H**	**F**	**2**	**2**	**P01**
	LE132MB6E	1.90	3.00	O. R.	67	79	4 200	290	36.00	**H**	**H**	**2**	**2**	**P01**
	LE132MJ6E	2.10	2.90	O. R.	67	79	3 500	370	45.00	**H**	**L**	**2**	**2**	**P01**
160	LE160ML6E	2.10	2.50	O. R.	70	82	2 800	750	67.00	**J**	**H**	**2**	**2**	**P01**
	LE160LL6E	2.20	2.50	O. R.	70	82	2 800	980	83.00	**J**	**V**	**2**	**2**	**P01**
180	LES180LE6E	2.80	3.40	O. R.	60	74	O. R.	1 700	141.00	**K**	**M**	**3**	**2**	**P01**
200	LES200LG6E	2.60	3.00	O. R.	62	76	O. R.	2 500	181.00	**L**	**L**	**3**	**2**	**P01**
	LES200LP6E	3.00	3.00	O. R.	62	76	O. R.	3 000	201.00	**L**	**N**	**3**	**2**	**P01**
225	LES225YMF6E	2.90	3.10	2.30	60	73	O. R.	5 800	285.00	**M**	**K**	**3**	**2**	**P01**
250	LES250MD6E	3.30	2.80	2.30	63	77	O. R.	8 600	370.00	**N**	**D**	**3**	**2**	**P01**
8-pole, 900 rpm at 60 Hz, 50 Hz power														
180	LES180LE8E	2.60	2.90	O. R.	71	78	O. R.	1 950	155.00	**K**	**M**	**3**	**2**	**P02**
200	LES200LP8E	2.80	3.30	O. R.	59	66	O. R.	3 440	220.00	**L**	**N**	**3**	**2**	**P02**
225	LES225SD8E	2.50	3.10	2.10	54	67	O. R.	4 300	250.00	**M**	**F**	**3**	**2**	**P02**
	LES225MD8E	2.50	3.00	2.10	55	68	O. R.	5 000	270.00	**M**	**G**	**3**	**2**	**P02**
250	LES250MD8E	2.70	3.00	2.10	57	71	O. R.	8 600	370.00	**N**	**D**	**3**	**2**	**P02**

O. R. On request

© Siemens AG 2017

Selection and ordering data (continued)

Frame size	Motor	P_{rated}	n_{rated}	T_{rated}	I_{rated}	cos φ	η		Efficiency class	I_{St}/I_{rated}	Article No.				Order code
					460 V		4/4 load	3/4 load	acc. to IEC		Data position				No. poles
		kW	rpm	Nm	A	-	%	%	60034-30	-	9th	10th	11th	12th	
4-pole, 1 800 rpm at 60 Hz, 60 Hz power															
80	LE80MD4E	0.63	1 735	3.47	1.42	0.74	75.50	75.80	-	5.70	**D**	**C**	**2**	**2**	**-**
	LE80MH4E	0.86	1 740	4.72	1.82	0.76	78.00	78.50	IE2	6.20	**D**	**E**	**2**	**2**	**-**
90	LE90SG4E	1.27	1 725	7.03	2.45	0.78	84.00	84.70	IE2	6.10	**E**	**K**	**2**	**2**	**-**
	LE90LH4E	1.75	1 730	9.66	3.30	0.79	84.00	85.00	IE2	6.70	**E**	**M**	**2**	**2**	**-**
100	LE100LE4E	2.55	1 755	13.9	4.45	0.82	87.50	87.90	IE2	7.30	**F**	**L**	**2**	**2**	**-**
	LE100LK4E	3.45	1 755	18.8	6.00	0.82	87.50	88.20	IE2	7.50	**F**	**M**	**2**	**2**	**-**
112	LE112ME4E	4.55	1 760	24.7	8.00	0.82	87.50	88.00	IE2	7.50	**G**	**H**	**2**	**2**	**-**
132	LE132SF4E	6.30	1 765	34.1	10.90	0.81	89.50	89.80	IE2	7.30	**H**	**G**	**2**	**2**	**-**
	LE132MF4E	8.60	1 765	46.5	14.50	0.83	89.50	90.50	IE2	7.10	**H**	**J**	**2**	**2**	**-**
	LE132ZMM4E	10.50	1 760	57	17.70	0.83	91.00	O. R.	IE2	7.20	**H**	**V**	**2**	**2**	**-**
160	LE160MF4E	12.60	1 770	68	20.50	0.85	91.00	91.40	IE2	7.00	**J**	**P**	**2**	**2**	**-**
	LE160LD4E	17.30	1 775	93.1	27.50	0.86	92.40	92.40	IE2	7.70	**J**	**U**	**2**	**2**	**-**
180	LES180MM4E	21.30	1 765	115.2	34.00	0.85	92.40	93.10	IE2	6.80	**K**	**L**	**3**	**2**	**-**
	LES180ZLJ4E	25.30	1 765	136.9	40.50	0.85	92.40	92.90	IE2	7.50	**K**	**N**	**3**	**2**	**-**
200	LES200LN4E	34.50	1 770	186.1	55.00	0.85	93.00	93.40	IE2	7.20	**L**	**M**	**3**	**2**	**-**
225	LES225SD4E	42.50	1 770	229.3	65.00	0.88	93.60	94.20	IE2	6.60	**M**	**F**	**3**	**2**	**-**
	LES225YMF4E	52.00	1 775	280	80.00	0.87	94.10	94.70	IE2	6.80	**M**	**T**	**3**	**2**	**-**
250	LES250MD4E	63.00	1 780	338	99.00	0.85	94.10	94.40	IE2	6.60	**N**	**M**	**3**	**2**	**-**
2-pole, 3 600 rpm at 60 Hz, 60 Hz power															
80	LE80MA2E	0.86	3 410	2.41	1.70	0.84	75.50	77.00	IE2	5.20	**D**	**B**	**2**	**2**	**P00**
	LE80ME2E	1.27	3 430	3.54	2.30	0.84	82.50	83.80	IE2	6.30	**D**	**M**	**2**	**2**	**P00**
90	LE90SG2E	1.75	3 480	4.8	3.10	0.85	84.00	84.50	IE2	7.40	**E**	**K**	**2**	**2**	**P00**
	LE90LH2E	2.55	3 485	6.99	4.35	0.86	85.50	86.40	IE2	7.60	**E**	**M**	**2**	**2**	**P00**
100	LE100LD2E	3.45	3 505	9.4	5.80	0.85	87.50	86.40	IE2	7.30	**F**	**K**	**2**	**2**	**P00**
112	LE112MA2E	4.55	3 550	12.2	7.50	0.87	87.50	87.40	IE2	7.80	**G**	**G**	**2**	**2**	**P00**
132	LE132SB2E	6.30	3 550	16.9	10.20	0.88	88.50	89.30	IE2	6.90	**H**	**E**	**2**	**2**	**P00**
	LE132SF2E	8.60	3 550	23.1	13.70	0.88	89.50	90.50	IE2	7.40	**H**	**G**	**2**	**2**	**P00**
160	LE160MB2E	12.60	3 555	33.8	19.90	0.85	90.20	89.60	IE2	7.40	**J**	**N**	**2**	**2**	**P00**
	LE160MG2E	17.30	3 555	46.5	27.00	0.88	91.00	90.60	IE2	7.60	**J**	**Q**	**2**	**2**	**P00**
	LE160LB2E	21.30	3 555	57.2	33.00	0.88	91.00	90.60	IE2	7.90	**J**	**T**	**2**	**2**	**P00**
6-pole, 1 200 rpm at 60 Hz, 60 Hz power															
80	LE80MD6E	0.43	1 125	3.65	1.04	0.69	75.30	75.30	-	4.20	**D**	**C**	**2**	**2**	**P01**
	LE80MK6E	0.63	1 135	5.3	1.56	0.66	77.00	77.50	-	4.80	**D**	**F**	**2**	**2**	**P01**
90	LE90SH6E	0.86	1 145	7.17	1.85	0.73	73.00	73.00	IE2	4.80	**E**	**C**	**2**	**2**	**P01**
	LE90LLB6E	1.27	1 135	10.7	3.05	0.70	75.00	75.00	IE1	4.40	**E**	**P**	**2**	**2**	**P01**
100	LE100LLB6E	1.75	1 170	14.3	3.45	0.74	86.50	87.10	IE2	5.80	**F**	**P**	**2**	**2**	**P01**
112	LE112ME6E	2.55	1 165	20.9	4.90	0.75	87.50	88.10	IE2	5.50	**G**	**H**	**2**	**2**	**P01**
132	LE132SC6E	3.45	1 170	28.2	6.90	0.72	87.50	87.80	IE2	5.20	**H**	**F**	**2**	**2**	**P01**
	LE132MB6E	4.55	1 170	37.1	8.70	0.75	87.50	88.50	IE2	5.30	**H**	**H**	**2**	**2**	**P01**
	LE132MJ6E	6.30	1 170	51.4	11.60	0.76	89.50	90.00	IE2	5.80	**H**	**L**	**2**	**2**	**P01**
160	LE160ML6E	8.60	1 175	69.9	16.10	0.75	89.50	90.20	IE2	4.90	**J**	**H**	**2**	**2**	**P01**
	LE160LL6E	12.60	1 175	102.4	23.00	0.76	90.20	91.00	IE2	4.90	**J**	**V**	**2**	**2**	**P01**
180	LES180LE6E	18.00	1 170	146.9	31.00	0.80	91.70	92.20	IE2	6.00	**K**	**M**	**3**	**2**	**P01**
200	LES200LG6E	22.00	1 175	178.8	36.50	0.83	91.00	91.90	IE1	5.80	**L**	**L**	**3**	**2**	**P01**
	LES200LP6E	26.50	1 175	215.4	43.50	0.83	91.70	92.80	IE1	6.30	**L**	**N**	**3**	**2**	**P01**
225	LES225YMF6E	36.00	1 175	293	59.00	0.84	91.70	92.50	IE1	6.00	**M**	**K**	**3**	**2**	**P01**
250	LES250MD6E	44.50	1 180	360	73.00	0.84	91.70	92.50	IE1	6.30	**N**	**D**	**3**	**2**	**P01**
8-pole, 900 rpm at 60 Hz, 60 Hz power															
180	LES180LE8E	12.60	865	139.1	26.00	0.73	86.80	87.80	-	4.90	**K**	**M**	**3**	**2**	**P02**
200	LES200LP8E	18.00	865	198.7	32.50	0.78	89.50	91.20	-	5.40	**L**	**N**	**3**	**2**	**P02**
225	LES225SD8E	22.00	880	238.7	38.50	0.79	90.30	91.20	-	5.40	**M**	**F**	**3**	**2**	**P02**
	LES225MD8E	26.50	880	288	45.00	0.81	91.00	91.90	-	5.40	**M**	**G**	**3**	**2**	**P02**
250	LES250MD8E	36.00	880	391	60.00	0.82	91.70	92.50	-	5.40	**N**	**D**	**3**	**2**	**P02**

O. R. On request

© Siemens AG 2017

Selection and ordering data (continued)

Frame size	Motor	T_{St}/T_{rated}	T_{Bk}/T_{rated}	T_A/T_{rated}	L_{pfA}	L_{WA}	Z_0	J_{mot}	m_{mot}	Article No. Data position 9th	10th	11th	12th	Order code No. poles
		-	-	-	dB (A)	dB (A)	1/h	10^{-4} kgm²	kg					
4-pole, 1 800 rpm at 60 Hz, 60 Hz power														
80	LE80MD4E	2.40	3.30	2.60	55	66	7 000	17	9.30	**D**	**C**	**2**	**2**	**-**
	LE80MH4E	2.20	3.30	2.40	55	66	7 000	21	10.00	**D**	**E**	**2**	**2**	**-**
90	LE90SG4E	2.30	3.00	2.50	58	70	8 000	28	12.00	**E**	**K**	**2**	**2**	**-**
	LE90LH4E	2.50	3.40	2.80	58	70	8 000	36	15.00	**E**	**M**	**2**	**2**	**-**
100	LE100LE4E	2.10	3.30	2.30	62	74	5 000	86	20.00	**F**	**L**	**2**	**2**	**-**
	LE100LK4E	2.00	3.10	2.20	62	74	5 000	110	24.00	**F**	**M**	**2**	**2**	**-**
112	LE112ME4E	2.40	3.20	2.60	62	74	5 000	140	24.00	**G**	**H**	**2**	**2**	**-**
132	LE132SF4E	2.30	2.90	2.50	68	80	3 000	270	35.00	**H**	**G**	**2**	**2**	**-**
	LE132MF4E	2.30	2.90	2.50	68	80	3 000	340	42.00	**H**	**J**	**2**	**2**	**-**
	LE132ZMM4E	2.10	3.00	O. R.	64	76	1 600	410	O. R.	**H**	**V**	**2**	**2**	**-**
160	LE160MF4E	2.20	2.80	2.40	69	81	2 000	650	61.00	**J**	**P**	**2**	**2**	**-**
	LE160LD4E	2.30	2.90	2.50	69	81	2 000	830	73.00	**J**	**U**	**2**	**2**	**-**
180	LES180MM4E	2.50	3.40	O. R.	61	74	O. R.	1200	151.00	**K**	**L**	**3**	**2**	**-**
	LES180ZLJ4E	2.60	3.40	O. R.	62	74	O. R.	1300	156.00	**K**	**N**	**3**	**2**	**-**
200	LES200LN4E	2.70	3.20	O. R.	67	80	O. R.	2000	211.00	**L**	**M**	**3**	**2**	**-**
225	LES225SD4E	2.30	2.90	2.00	66	80	O. R.	4200	280.00	**M**	**F**	**3**	**2**	**-**
	LES225YMF4E	2.50	3.10	2.10	67	80	O. R.	4600	305.00	**M**	**T**	**3**	**2**	**-**
250	LES250MD4E	2.80	2.90	2.10	66	80	O. R.	7500	385.00	**N**	**M**	**3**	**2**	**-**
2-pole, 3 600 rpm at 60 Hz, 60 Hz power														
80	LE80MA2E	1.90	2.30	2.00	64	75	3 000	8	8.30	**D**	**B**	**2**	**2**	**P00**
	LE80ME2E	2.70	3.30	2.90	64	75	3 000	11	10.00	**D**	**M**	**2**	**2**	**P00**
90	LE90SG2E	2.60	3.80	2.80	69	81	2 000	17	12.00	**E**	**K**	**2**	**2**	**P00**
	LE90LH2E	2.60	3.90	2.80	69	81	2 000	21	14.00	**E**	**M**	**2**	**2**	**P00**
100	LE100LD2E	2.20	3.30	2.40	71	83	2 000	44	21.00	**F**	**K**	**2**	**2**	**P00**
112	LE112MA2E	2.40	3.30	2.60	73	85	1 300	92	22.00	**G**	**G**	**2**	**2**	**P00**
132	LE132SB2E	1.80	2.90	1.90	72	84	800	200	32.00	**H**	**E**	**2**	**2**	**P00**
	LE132SF2E	2.00	3.10	2.20	72	84	800	240	36.00	**H**	**G**	**2**	**2**	**P00**
160	LE160MB2E	2.10	3.20	2.30	77	89	500	450	57.00	**J**	**N**	**2**	**2**	**P00**
	LE160MG2E	2.40	3.40	2.60	77	89	500	530	65.00	**J**	**Q**	**2**	**2**	**P00**
	LE160LB2E	2.90	3.60	3.10	77	89	500	610	74.00	**J**	**T**	**2**	**2**	**P00**
6-pole, 1 200 rpm at 60 Hz, 60 Hz power														
80	LE80MD6E	2.10	2.60	2.30	45	56	8 400	17	8.30	**D**	**C**	**2**	**2**	**P01**
	LE80MK6E	2.60	3.10	2.80	45	56	8 400	25	11.30	**D**	**F**	**2**	**2**	**P01**
90	LE90SH6E	1.90	2.60	1.80	46	58	7 000	30	12.00	**E**	**C**	**2**	**2**	**P01**
	LE90LLB6E	2.10	2.60	O. R.	46	58	7 000	40	15.00	**E**	**P**	**2**	**2**	**P01**
100	LE100LLB6E	1.90	2.80	O. R.	62	74	6 300	110	24.00	**F**	**P**	**2**	**2**	**P01**
112	LE112ME6E	1.90	2.80	O. R.	65	77	5 600	140	24.00	**G**	**H**	**2**	**2**	**P01**
132	LE132SC6E	1.60	2.60	O. R.	67	79	4 200	240	31.00	**H**	**F**	**2**	**2**	**P01**
	LE132MB6E	1.60	2.40	O. R.	67	79	4 200	290	36.00	**H**	**H**	**2**	**2**	**P01**
	LE132MJ6E	1.90	2.60	O. R.	67	79	3 500	370	45.00	**H**	**L**	**2**	**2**	**P01**
160	LE160ML6E	1.90	2.20	O. R.	70	82	2 800	750	67.00	**J**	**H**	**2**	**2**	**P01**
	LE160LL6E	1.90	2.20	O. R.	70	82	2 800	980	83.00	**J**	**V**	**2**	**2**	**P01**
180	LES180LE6E	2.40	2.90	O. R.	60	74	O. R.	1 700	141.00	**K**	**M**	**3**	**2**	**P01**
200	LES200LG6E	2.30	2.50	O. R.	62	76	O. R.	2 500	181.00	**L**	**L**	**3**	**2**	**P01**
	LES200LP6E	2.50	2.50	O. R.	62	76	O. R.	3 000	201.00	**L**	**N**	**3**	**2**	**P01**
225	LES225YMF6E	2.40	2.70	1.90	60	73	O. R.	5 800	285.00	**M**	**K**	**3**	**2**	**P01**
250	LES250MD6E	2.70	2.30	1.90	63	77	O. R.	8 600	370.00	**N**	**D**	**3**	**2**	**P01**
8-pole, 900 rpm at 60 Hz, 60 Hz power														
180	LES180LE8E	2.20	2.40	O. R.	71	78	O. R.	1 950	155.00	**K**	**M**	**3**	**2**	**P02**
200	LES200LP8E	2.30	2.70	O. R.	59	66	O. R.	3 440	220.00	**L**	**N**	**3**	**2**	**P02**
225	LES225SD8E	2.10	2.60	1.80	54	67	O. R.	4 300	250.00	**M**	**F**	**3**	**2**	**P02**
	LES225MD8E	2.20	2.60	1.80	55	68	O. R.	5 000	270.00	**M**	**G**	**3**	**2**	**P02**
250	LES250MD8E	2.20	2.50	1.80	57	71	O. R.	8 600	370.00	**N**	**D**	**3**	**2**	**P02**

O. R. On request

© Siemens AG 2017

Selection and ordering data (continued)

Frame size	Motor	P_{rated}	n_{rated}	T_{rated}	I_{rated} 400 V	cos φ	η 4/4 load	T_{Bk}/T_{rated}	Article No. Data position				Order code	
													Power	No. poles
		kW	rpm	Nm	A	-	%	-	9th	10th	11th	12th		
4-pole, 2 610 rpm at 87 Hz, 400 V, duty type S9														
80	LE80MD4E	0.95	2 555	3.55	2.45	0.68	82.10	3.1	**D**	**C**	**2**	**2**	**P91**	**-**
	LE80MH4E	1.30	2 555	4.86	3.20	0.71	83.00	3.1	**D**	**E**	**2**	**2**	**P91**	**-**
90	LE90SG4E	1.90	2 540	7.14	4.50	0.72	84.30	2.9	**E**	**K**	**2**	**2**	**P91**	**-**
	LE90LH4E	2.50	2 550	9.36	5.80	0.73	85.70	3.6	**E**	**M**	**2**	**2**	**P91**	**-**
100	LE100LE4E	3.60	2 570	13.4	7.50	0.79	87.80	3.5	**F**	**L**	**2**	**2**	**P91**	**-**
	LE100LK4E	5.00	2 565	18.6	10.30	0.80	88.00	3.2	**F**	**M**	**2**	**2**	**P91**	**-**
112	LE112ME4E	6.50	2 570	24.2	14.00	0.76	88.20	3.4	**G**	**H**	**2**	**2**	**P91**	**-**
132	LE132SF4E	9.00	2 575	33.4	18.80	0.78	88.60	3.1	**H**	**G**	**2**	**2**	**P91**	**-**
	LE132MF4E	12.50	2 575	46.4	24.50	0.82	89.80	3.0	**H**	**J**	**2**	**2**	**P91**	**-**
	LE132ZMM4E	16.00	2 570	59.5	30.50	0.82	90.00	3.1	**H**	**V**	**2**	**2**	**P91**	**-**
160	LE160MF4E	17.00	2 585	62.8	33.00	0.81	91.20	3.1	**J**	**P**	**2**	**2**	**P91**	**-**
	LE160LD4E	23.50	2 585	86.8	45.50	0.81	92.20	3.3	**J**	**U**	**2**	**2**	**P91**	**-**
180	LES180MM4E	29.00	2 580	107.3	55.00	0.82	92.6	3.8	**K**	**L**	**3**	**2**	**P91**	**-**
	LES180ZLJ4E	34.00	2 575	126.1	65.00	0.83	91.0	3.9	**K**	**N**	**3**	**2**	**P91**	**-**
200	LES200LN4E	46.50	2 580	172.1	88.00	0.83	91.8	3.7	**L**	**M**	**3**	**2**	**P91**	**-**
225	LES225SD4E	55.50	2 580	205.4	105.00	0.87	91.90	3.2	**M**	**F**	**3**	**2**	**P91**	**-**
	LES225YMF4E	67.50	2 580	249.8	128.00	0.87	92.20	3.3	**M**	**T**	**3**	**2**	**P91**	**-**
250	LES250MD4E	82.50	2 590	304	160.00	0.83	93.20	3.4	**N**	**M**	**3**	**2**	**P91**	**-**
6-pole, 1 740 rpm at 87 Hz, 400 V, duty type S9														
80	LE80MD6E	0.65	1 675	3.71	1.85	0.63	78.90	2.5	**D**	**C**	**2**	**2**	**P91**	**P01**
	LE80MK6E	0.95	1 675	5.42	2.75	0.61	81.20	3.0	**D**	**F**	**2**	**2**	**P91**	**P01**
90	LE90SH6E	1.30	1 680	7.39	3.30	0.68	83.10	2.5	**E**	**C**	**2**	**2**	**P91**	**P01**
	LE90LLB6E	1.90	1 680	10.8	5.00	0.66	82.20	2.7	**E**	**P**	**2**	**2**	**P91**	**P01**
100	LE100LLB6E	2.60	1 710	14.5	6.10	0.70	88.00	2.8	**F**	**P**	**2**	**2**	**P91**	**P01**
112	LE112ME6E	3.80	1 710	21.2	8.60	0.73	87.00	2.8	**G**	**H**	**2**	**2**	**P91**	**P01**
132	LE132SC6E	5.00	1 715	27.8	11.80	0.70	87.40	2.6	**H**	**F**	**2**	**2**	**P91**	**P01**
	LE132MB6E	6.50	1 715	36.2	14.30	0.74	88.40	2.5	**H**	**H**	**2**	**2**	**P91**	**P01**
	LE132MJ6E	9.00	1 715	50.1	19.50	0.74	89.80	2.8	**H**	**L**	**2**	**2**	**P91**	**P01**
160	LE160ML6E	12.00	1 720	66.6	26.00	0.74	90.10	2.4	**J**	**H**	**2**	**2**	**P91**	**P01**
	LE160LL6E	17.00	1 720	94.4	35.00	0.77	90.80	2.5	**J**	**V**	**2**	**2**	**P91**	**P01**
180	LES180LE6E	26.00	O. R.	O. R.	O. R.	O. R.	O. R.	O. R.	**K**	**M**	**3**	**2**	**P91**	**P01**
200	LES200LG6E	32.00	O. R.	O. R.	O. R.	O. R.	O. R.	O. R.	**L**	**L**	**3**	**2**	**P91**	**P01**
	LES200LP6E	38.00	O. R.	O. R.	O. R.	O. R.	O. R.	O. R.	**L**	**N**	**3**	**2**	**P91**	**P01**
225	LES225YMF6E	45.00	1 182	364	O. R.	0.83	93.00	3.1	**M**	**K**	**3**	**2**	**P91**	**P01**
250	LES250MD6E	55.50	1 185	447	O. R.	0.83	93.00	2.8	**N**	**D**	**3**	**2**	**P91**	**P01**
8-pole, 1 305 rpm at 87 Hz, 400 V, duty type S9														
180	LES180LE8E	19.00	O. R.	O. R.	O. R.	O. R.	O. R.	O. R.	**K**	**M**	**3**	**2**	**P91**	**P02**
200	LES200LP8E	26.00	O. R.	O. R.	O. R.	O. R.	O. R.	O. R.	**L**	**N**	**3**	**2**	**P91**	**P02**
225	LES225SD8E	32.00	O. R.	O. R.	O. R.	O. R.	O. R.	O. R.	**M**	**F**	**3**	**2**	**P91**	**P02**
	LES225MD8E	38.00	O. R.	O. R.	O. R.	O. R.	O. R.	O. R.	**M**	**G**	**3**	**2**	**P91**	**P02**
250	LES250MD8E	45.00	O. R.	O. R.	O. R.	O. R.	O. R.	O. R.	**N**	**D**	**3**	**2**	**P91**	**P02**

O. R. On request

© Siemens AG 2017

Selection and ordering data (continued)

Frame size	Motor	L_{pfA}	L_{WA}	J_{mot}	m_{mot}	Article No. Data position 9th	10th	11th	12th	Order code Power	No. poles
		dB (A)	dB (A)	10^{-4} kgm²	kg						
4-pole, 2 610 rpm at 87 Hz, 400 V, duty type S9											
80	LE80MD4E	O. R.	O. R.	17	9.30	**D**	**C**	**2**	**2**	**P91**	**-**
	LE80MH4E	O. R.	O. R.	21	10.00	**D**	**E**	**2**	**2**	**P91**	**-**
90	LE90SG4E	O. R.	O. R.	28	12.00	**E**	**K**	**2**	**2**	**P91**	**-**
	LE90LH4E	O. R.	O. R.	36	15.00	**E**	**M**	**2**	**2**	**P91**	**-**
100	LE100LE4E	O. R.	O. R.	86	20.00	**F**	**L**	**2**	**2**	**P91**	**-**
	LE100LK4E	O. R.	O. R.	110	24.00	**F**	**M**	**2**	**2**	**P91**	**-**
112	LE112ME4E	O. R.	O. R.	140	24.00	**G**	**H**	**2**	**2**	**P91**	**-**
132	LE132SF4E	O. R.	O. R.	270	35.00	**H**	**G**	**2**	**2**	**P91**	**-**
	LE132MF4E	O. R.	O. R.	340	42.00	**H**	**J**	**2**	**2**	**P91**	**-**
	LE132ZMM4E	O. R.	O. R.	410	O. R.	**H**	**V**	**2**	**2**	**P91**	**-**
160	LE160MF4E	O. R.	O. R.	650	61.00	**J**	**P**	**2**	**2**	**P91**	**-**
	LE160LD4E	O. R.	O. R.	830	73.00	**J**	**U**	**2**	**2**	**P91**	**-**
180	LES180MM4E	O. R.	O. R.	1 200	151.00	**K**	**L**	**3**	**2**	**P91**	**-**
	LES180ZLJ4E	O. R.	O. R.	1 300	156.00	**K**	**N**	**3**	**2**	**P91**	**-**
200	LES200LN4E	O. R.	O. R.	2 000	211.00	**L**	**M**	**3**	**2**	**P91**	**-**
225	LES225SD4E	79	O. R.	4 200	280.00	**M**	**F**	**3**	**2**	**P91**	**-**
	LES225YMF4E	79	O. R.	4 600	305.00	**M**	**T**	**3**	**2**	**P91**	**-**
250	LES250MD4E	78	O. R.	7 500	385.00	**N**	**M**	**3**	**2**	**P91**	**-**
6-pole, 1 740 rpm at 87 Hz, 400 V, duty type S9											
80	LE80MD6E	O. R.	O. R.	17	8.30	**D**	**C**	**2**	**2**	**P91**	**P01**
	LE80MK6E	O. R.	O. R.	25	11.30	**D**	**F**	**2**	**2**	**P91**	**P01**
90	LE90SH6E	O. R.	O. R.	30	12.00	**E**	**C**	**2**	**2**	**P91**	**P01**
	LE90LLB6E	O. R.	O. R.	40	15.00	**E**	**P**	**2**	**2**	**P91**	**P01**
100	LE100LLB6E	O. R.	O. R.	110	24.00	**F**	**P**	**2**	**2**	**P91**	**P01**
112	LE112ME6E	O. R.	O. R.	140	24.00	**G**	**H**	**2**	**2**	**P91**	**P01**
132	LE132SC6E	O. R.	O. R.	240	31.00	**H**	**F**	**2**	**2**	**P91**	**P01**
	LE132MB6E	O. R.	O. R.	290	36.00	**H**	**H**	**2**	**2**	**P91**	**P01**
	LE132MJ6E	O. R.	O. R.	370	45.00	**H**	**L**	**2**	**2**	**P91**	**P01**
160	LE160ML6E	O. R.	O. R.	750	67.00	**J**	**H**	**2**	**2**	**P91**	**P01**
	LE160LL6E	O. R.	O. R.	980	83.00	**J**	**V**	**2**	**2**	**P91**	**P01**
180	LES180LE6E	O. R.	O. R.	1 700	141.00	**K**	**M**	**3**	**2**	**P91**	**P01**
200	LES200LG6E	O. R.	O. R.	2 500	181.00	**L**	**L**	**3**	**2**	**P91**	**P01**
	LES200LP6E	O. R.	O. R.	3 000	201.00	**L**	**N**	**3**	**2**	**P91**	**P01**
225	LES225YMF6E	O. R.	O. R.	5 800	285.00	**M**	**K**	**3**	**2**	**P91**	**P01**
250	LES250MD6E	O. R.	O. R.	8 600	370.00	**N**	**D**	**3**	**2**	**P91**	**P01**
8-pole, 1 305 rpm at 87 Hz, 400 V, duty type S9											
180	LES180LE8E	O. R.	O. R.	1 950	155.00	**K**	**M**	**3**	**2**	**P91**	**P02**
200	LES200LP8E	O. R.	O. R.	3 440	220.00	**L**	**N**	**3**	**2**	**P91**	**P02**
225	LES225SD8E	O. R.	O. R.	4 300	250.00	**M**	**F**	**3**	**2**	**P91**	**P02**
	LES225MD8E	O. R.	O. R.	5 000	270.00	**M**	**G**	**3**	**2**	**P91**	**P02**
250	LES250MD8E	O. R.	O. R.	8 600	370.00	**N**	**D**	**3**	**2**	**P91**	**P02**

O. R. On request

© Siemens AG 2017

Selection and ordering data

Frame size	Motor	P_{rated}	n_{rated}	T_{rated}	I_{rated}	cos φ	η		Efficiency class	I_{St}/I_{rated}	Article No.				Order code
					400 V		4/4 load	3/4 load	acc. to IEC		Data position				No. poles
		kW	rpm	Nm	A	-	%	%	60034-30	-	9th	10th	11th	12th	
4-pole, 1 500 rpm at 50 Hz															
80	LE80ZMQ4P	0.75	1 450	4.94	1.75	0.75	82.50	82.30	IE3	7.10	**D**	**F**	**2**	**3**	**-**
90	LE90SM4P	1.10	1 440	7.29	2.40	0.78	84.10	84.70	IE3	6.90	**E**	**K**	**2**	**3**	**-**
	LE90ZLR4P	1.50	1 445	9.91	3.15	0.80	85.30	85.90	IE3	7.20	**E**	**M**	**2**	**3**	**-**
100	LE100ZLSA4P	2.20	1 465	14.3	4.40	0.83	86.70	87.30	IE3	7.60	**F**	**N**	**2**	**3**	**-**
	LE100ZLSB4P	3.00	1 460	19.6	5.90	0.83	87.70	88.40	IE3	7.30	**F**	**P**	**2**	**3**	**-**
112	LE112ZMKB4P	4.00	1 460	26.2	7.90	0.82	88.60	88.60	IE3	7.10	**G**	**J**	**2**	**3**	**-**
132	LE132ZST4P	5.50	1 470	35.7	10.50	0.84	89.60	89.60	IE3	7.20	**H**	**J**	**2**	**3**	**-**
	LE132ZMS4P	7.50	1 470	48.7	14.30	0.84	90.40	90.40	IE3	7.40	**H**	**L**	**2**	**3**	**-**
160	LE160MPA4P	9.20	1 480	59.4	18.70	0.78	91.00	O. R.	IE3	7.60	**J**	**Q**	**2**	**3**	**-**
	LE160MPB4P	11.00	1 475	71.2	20.50	0.84	91.40	91.40	IE3	6.90	**J**	**R**	**2**	**3**	**-**
	LE160ZLL4P	15.00	1 475	97.1	28.50	0.82	92.10	92.10	IE3	8.50	**J**	**U**	**2**	**3**	**-**
180	LES180MQ4P	18.50	1 470	120.2	35.00	0.82	92.60	93.10	IE3	7.20	**K**	**L**	**3**	**3**	**-**
	LES180ZLN4P	22.00	1 470	142.9	41.00	0.83	93.00	93.60	IE3	6.80	**K**	**N**	**3**	**3**	**-**
200	LES200ZLU4P	30.00	1 470	194.9	55.00	0.84	93.60	94.20	IE3	7.30	**L**	**N**	**3**	**3**	**-**
225	LES225SD4P	37.00	1 478	239.1	66.00	0.86	93.90	94.50	IE3	6.40	**M**	**F**	**3**	**3**	**-**
	LES225YMF4P	45.00	1 478	291	80.00	0.86	94.20	94.90	IE3	6.40	**M**	**T**	**3**	**3**	**-**
250	LES250MD4P	55.00	1 482	354	96.00	0.87	94.60	95.10	IE3	6.80	**N**	**M**	**3**	**3**	**-**
2-pole, 3 000 rpm at 50 Hz															
80	LE80ME2P	0.75	2 850	2.51	1.56	0.86	80.70	82.00	IE3	6.20	**D**	**B**	**2**	**3**	**P00**
	LE80ZMJ2P	1.10	2 885	3.64	2.25	0.85	82.70	82.70	IE3	7.40	**D**	**M**	**2**	**3**	**P00**
90	LE90SM2P	1.50	2 910	4.92	3.00	0.86	84.20	84.50	IE3	8.10	**E**	**K**	**2**	**3**	**P00**
	LE90ZLR2P	2.20	2 910	7.22	4.20	0.88	85.90	86.80	IE3	8.30	**E**	**M**	**2**	**3**	**P00**
100	LE100ZLK2P	3.00	2 920	9.81	5.60	0.88	87.10	87.10	IE3	8.00	**F**	**K**	**2**	**3**	**P00**
112	LE112ZMH2P	4.00	2 950	12.9	7.40	0.89	88.10	88.10	IE3	7.50	**G**	**G**	**2**	**3**	**P00**
132	LE132SF2P	5.50	2 950	17.8	9.90	0.90	89.20	89.20	IE3	7.40	**H**	**E**	**2**	**3**	**P00**
	LE132ZSQB2P	7.50	2 950	24.3	13.10	0.92	90.10	90.10	IE3	8.30	**H**	**H**	**2**	**3**	**P00**
160	LE160MG2P	11.00	2 955	35.5	19.60	0.89	91.20	91.20	IE3	7.90	**J**	**N**	**2**	**3**	**P00**
	LE160MM2P	15.00	2 960	48.4	27.00	0.87	91.90	91.90	IE3	8.70	**J**	**P**	**2**	**3**	**P00**
	LE160ZLJ2P	18.50	2 955	59.8	32.00	0.90	92.40	92.40	IE3	9.00	**J**	**T**	**2**	**3**	**P00**
6-pole, 1 000 rpm at 50 Hz															
90	LE90SQ6P	0.75	945	7.58	1.96	0.70	78.90	80.00	IE3	4.60	**E**	**C**	**2**	**3**	**P01**
	LE90ZLR6P	1.10	940	11.2	2.85	0.69	81.00	80.00	IE3	4.60	**E**	**M**	**2**	**3**	**P01**
100	LE100LLB6P	1.50	970	14.8	3.60	0.73	82.50	83.10	IE3	5.20	**F**	**M**	**2**	**3**	**P01**
112	LE112ZMKB6P	2.20	970	21.7	5.00	0.75	84.30	85.10	IE3	5.60	**G**	**J**	**2**	**3**	**P01**
132	LE132SH6P	3.00	975	29.4	6.60	0.77	85.60	87.50	IE3	5.30	**H**	**H**	**2**	**3**	**P01**
	LE132MJ6P	4.00	975	39.2	8.60	0.77	86.80	88.10	IE3	5.60	**H**	**K**	**2**	**3**	**P01**
	LE132ZMS6P	5.50	975	53.9	11.70	0.77	88.00	89.00	IE3	5.70	**H**	**L**	**2**	**3**	**P01**
160	LE160MW6P	7.50	980	73.1	16.00	0.76	89.10	89.90	IE3	4.90	**J**	**J**	**2**	**3**	**P01**
	LE160ZLW6P	11.00	975	107.7	23.00	0.77	90.30	91.10	IE3	5.00	**J**	**V**	**2**	**3**	**P01**
180	LES180LJ6P	15.00	975	146.9	29.50	0.80	91.20	91.90	IE3	5.90	**K**	**M**	**3**	**3**	**P01**
200	LES200LM6P	18.50	978	180.6	37.00	0.79	91.70	92.50	IE3	5.60	**L**	**L**	**3**	**3**	**P01**
	LES200ZLS6P	22.00	978	214.8	43.50	0.79	92.20	93.10	IE3	5.60	**L**	**M**	**3**	**3**	**P01**
225	LES225YMF6P	30.00	982	292.0	56.00	0.83	92.90	93.60	IE3	6.60	**M**	**K**	**3**	**3**	**P01**
250	LES250MD6P	37.00	985	359.0	70.00	0.85	93.30	94.00	IE3	7.00	**N**	**D**	**3**	**3**	**P01**

O. R. On request

© Siemens AG 2017

Selection and ordering data (continued)

Frame size	Motor	T_{St}/T_{rated}	T_{Bk}/T_{rated}	T_A/T_{rated}	L_{pfA}	L_{WA}	Z_0	J_{mot}	m_{mot}	Article No. Data position 9th	10th	11th	12th	Order code No. poles
		-	-	-	dB (A)	dB (A)	1/h	10^{-4} kgm²	kg					
4-pole, 1 500 rpm at 50 Hz														
80	LE80ZMQ4P	2.70	3.90	3.00	53	64	15 000	29	10.00	**D**	**F**	**2**	**3**	-
90	LE90SM4P	2.90	3.60	3.20	56	68	9 000	36	12.00	**E**	**K**	**2**	**3**	-
	LE90ZLR4P	2.70	3.60	3.00	56	68	7 500	49	15.00	**E**	**M**	**2**	**3**	-
100	LE100ZLSA4P	2.10	3.60	2.30	60	72	6 000	140	29.00	**F**	**N**	**2**	**3**	-
	LE100ZLSB4P	2.30	3.70	2.50	60	72	6 000	140	29.00	**F**	**P**	**2**	**3**	-
112	LE112ZMKB4P	2.40	3.70	2.60	58	70	5 100	170	29.00	**G**	**J**	**2**	**3**	-
132	LE132ZST4P	2.10	3.40	3.00	64	76	4 500	460	57.00	**H**	**J**	**2**	**3**	-
	LE132ZMS4P	2.40	3.50	2.80	64	76	4 500	460	57.00	**H**	**L**	**2**	**3**	-
160	LE160MPA4P	2.30	3.60	O. R.	65	77	3 000	830	73.00	**J**	**Q**	**2**	**3**	-
	LE160MPB4P	2.20	3.20	2.80	65	77	3 000	830	73.00	**J**	**R**	**2**	**3**	-
	LE160ZLL4P	2.50	3.80	2.70	65	77	3 000	990	90.00	**J**	**U**	**2**	**3**	-
180	LES180MQ4P	2.50	3.30	2.80	66	73	600	1 300	165.00	**K**	**L**	**3**	**3**	-
	LES180ZLN4P	2.30	3.30	2.50	68	75	550	1 400	170.00	**K**	**N**	**3**	**3**	-
200	LES200ZLU4P	2.60	3.10	2.90	65	72	400	2 200	240.00	**L**	**N**	**3**	**3**	-
225	LES225SD4P	2.50	2.70	2.00	57	70	400	4 200	285.00	**M**	**F**	**3**	**3**	-
	LES225YMF4P	2.60	2.70	2.00	57	70	435	4 700	320.00	**M**	**T**	**3**	**3**	-
250	LES250MD4P	2.50	2.90	2.00	57	70	170	8 500	420.00	**N**	**M**	**3**	**3**	-
2-pole, 3 000 rpm at 50 Hz														
80	LE80ME2P	2.60	3.00	O. R.	60	71	5 100	11	9.30	**D**	**B**	**2**	**3**	**P00**
	LE80ZMJ2P	2.80	3.80	O. R.	60	71	8 700	13	10.00	**D**	**M**	**2**	**3**	**P00**
90	LE90SM2P	2.70	4.20	O. R.	65	77	6 000	21	12.00	**E**	**K**	**2**	**3**	**P00**
	LE90ZLR2P	2.60	4.00	O. R.	65	77	6 000	31	15.00	**E**	**M**	**2**	**3**	**P00**
100	LE100ZLK2P	2.80	4.30	3.50	67	79	2 700	54	26.00	**F**	**K**	**2**	**3**	**P00**
112	LE112ZMH2P	1.90	3.90	3.10	69	81	1 350	120	29.00	**G**	**G**	**2**	**3**	**P00**
132	LE132SF2P	1.80	3.60	2.00	68	80	1 350	240	36.00	**H**	**E**	**2**	**3**	**P00**
	LE132ZSQB2P	1.90	3.90	2.30	68	80	1 080	310	50.00	**H**	**H**	**2**	**3**	**P00**
160	LE160MG2P	2.40	3.80	2.70	70	82	600	530	65.00	**J**	**N**	**2**	**3**	**P00**
	LE160MM2P	2.70	4.30	3.00	70	82	600	610	74.00	**J**	**P**	**2**	**3**	**P00**
	LE160ZLJ2P	2.80	4.20	3.00	70	82	840	680	84.00	**J**	**T**	**2**	**3**	**P00**
6-pole, 1 000 rpm at 50 Hz														
90	LE90SQ6P	2.20	2.60	2.40	43	55	13 700	40	15.00	**E**	**C**	**2**	**3**	**P01**
	LE90ZLR6P	2.30	2.70	2.50	43	55	O. R.	48	18.00	**E**	**M**	**2**	**3**	**P01**
100	LE100LLB6P	1.90	2.80	O. R.	59	71	6 900	110	29.00	**F**	**M**	**2**	**3**	**P01**
112	LE112ZMKB6P	2.20	2.80	O. R.	65	74	6 900	170	29.00	**G**	**J**	**2**	**3**	**P01**
132	LE132SH6P	1.60	2.40	O. R.	63	75	3 900	290	36.00	**H**	**H**	**2**	**3**	**P01**
	LE132MJ6P	1.70	2.50	O. R.	63	75	3 900	370	45.00	**H**	**K**	**2**	**3**	**P01**
	LE132ZMS6P	1.80	2.60	O. R.	63	75	3 900	460	45.00	**H**	**L**	**2**	**3**	**P01**
160	LE160MW6P	1.90	2.30	O. R.	67	79	3 300	980	83.00	**J**	**J**	**2**	**3**	**P01**
	LE160ZLW6P	1.90	2.30	O. R.	67	79	2 700	1 200	105.00	**J**	**V**	**2**	**3**	**P01**
180	LES180LJ6P	2.30	2.80	2.50	61	68	800	1 900	180.00	**K**	**M**	**3**	**3**	**P01**
200	LES200LM6P	2.50	2.60	2.80	64	71	680	2 800	215.00	**L**	**L**	**3**	**3**	**P01**
	LES200ZLS6P	2.50	2.60	2.80	61	68	680	3 200	230.00	**L**	**M**	**3**	**3**	**P01**
225	LES225YMF6P	2.60	3.00	2.10	O. R.	O. R.	270	6 700	325.00	**M**	**K**	**3**	**3**	**P01**
250	LES250MD6P	2.70	2.90	2.10	O. R.	O. R.	205	10 000	405.00	**N**	**D**	**3**	**3**	**P01**

O. R. On request

© Siemens AG 2017

Selection and ordering data (continued)

Frame size	Motor	P_{rated}	n_{rated}	T_{rated}	I_{rated}	cos φ	η		Efficiency class	I_{St}/I_{rated}	Article No.				Order code
					460 V		4/4 load	3/4 load	acc. to IEC		Data position				No. poles
		kW	rpm	Nm	A	-	%	%	60034-30	-	9th	10th	11th	12th	
4-pole, 1 800 rpm at 60 Hz, 50 Hz power															
80	LE80ZMQ4P	0.75	1 760	4.07	1.59	0.71	83.50	82.60	IE3	8.30	**D**	**F**	**2**	**3**	**-**
90	LE90SM4P	1.10	1 750	6	2.15	0.75	86.50	86.40	IE3	8.20	**E**	**K**	**2**	**3**	**-**
	LE90ZLR4P	1.50	1 755	8.16	2.85	0.77	86.50	86.40	IE3	8.40	**E**	**M**	**2**	**3**	**-**
100	LE100ZLSA4P	2.20	1 770	11.9	3.90	0.81	87.50	87.40	IE2	8.70	**F**	**N**	**2**	**3**	**-**
	LE100ZLSB4P	3.00	1 765	16.2	5.20	0.81	89.50	89.60	IE3	8.60	**F**	**P**	**2**	**3**	**-**
112	LE112ZMKB4P	3.70	1 770	20	6.50	0.80	89.50	89.50	IE3	8.20	**G**	**J**	**2**	**3**	**-**
132	LE132ZST4P	5.50	1 775	29.6	9.10	0.83	89.50	89.50	IE2	8.20	**H**	**J**	**2**	**3**	**-**
	LE132ZMS4P	7.50	1 775	40.3	12.40	0.83	89.50	89.50	IE2	8.50	**H**	**L**	**2**	**3**	**-**
160	LE160MPA4P	9.20	1 785	49.2	16.40	0.77	91.70	O. R.	IE3	8.80	**J**	**Q**	**2**	**3**	**-**
	LE160MPB4P	11.00	1 780	59	18.00	0.83	92.40	92.40	IE3	7.90	**J**	**R**	**2**	**3**	**-**
	LE160ZLL4P	15.00	1 780	80.5	25.00	0.81	93.00	93.00	IE3	9.50	**J**	**U**	**2**	**3**	**-**
180	LES180MQ4P	18.50	1 775	99.5	31.00	0.81	93.60	93.70	IE3	7.80	**K**	**L**	**3**	**3**	**-**
	LES180ZLN4P	22.00	1 775	118.4	37.50	0.81	93.60	93.80	IE3	7.70	**K**	**N**	**3**	**3**	**-**
200	LES200ZLU4P	30.00	1 778	161.1	48.00	0.83	94.10	94.30	IE3	8.10	**L**	**N**	**3**	**3**	**-**
225	LES225SD4P	37.00	1 782	198.3	58.00	0.85	94.50	94.70	IE3	7.50	**M**	**F**	**3**	**3**	**-**
	LES225YMF4P	45.00	1 782	241.1	70.00	0.85	95.00	95.30	IE3	7.20	**M**	**T**	**3**	**3**	**-**
250	LES250MD4P	55.00	1 786	294	84.00	0.86	95.40	95.60	IE3	7.60	**N**	**M**	**3**	**3**	**-**
2-pole, 3 600 rpm at 60 Hz, 50 Hz power															
80	LE80ME2P	0.75	3 480	2.06	1.46	0.84	77.00	78.00	IE3	7.10	**D**	**B**	**2**	**3**	**P00**
	LE80ZMJ2P	1.10	3 500	3	1.98	0.83	84.00	84.00	IE3	8.40	**D**	**M**	**2**	**3**	**P00**
90	LE90SM2P	1.50	3 525	4.06	2.60	0.84	85.50	85.00	IE3	9.80	**E**	**K**	**2**	**3**	**P00**
	LE90ZLR2P	2.20	3 530	5.95	3.65	0.87	86.50	86.30	IE3	9.60	**E**	**M**	**2**	**3**	**P00**
100	LE100ZLK2P	3.00	3 530	8.12	4.90	0.87	88.50	88.50	IE3	9.60	**F**	**K**	**2**	**3**	**P00**
112	LE112ZMH2P	3.70	3 560	9.92	6.00	0.87	88.50	88.50	IE3	9.20	**G**	**G**	**2**	**3**	**P00**
132	LE132SF2P	5.50	3 555	14.8	8.60	0.89	89.50	89.50	IE3	8.60	**H**	**E**	**2**	**3**	**P00**
	LE132ZSQB2P	7.50	3 560	20.1	11.50	0.91	90.20	90.20	IE3	9.40	**H**	**H**	**2**	**3**	**P00**
160	LE160MG2P	11.00	3 560	29.5	17.20	0.88	91.00	91.00	IE3	8.90	**J**	**N**	**2**	**3**	**P00**
	LE160MM2P	15.00	3 565	40.2	24.00	0.87	91.00	91.00	IE3	10.00	**J**	**P**	**2**	**3**	**P00**
	LE160ZLJ2P	18.50	3 560	49.6	28.00	0.89	91.70	91.70	IE3	10.20	**J**	**T**	**2**	**3**	**P00**
6-pole, 1 200 rpm at 60 Hz, 50 Hz power															
90	LE90SQ6P	0.75	1 155	6.2	1.76	0.65	82.50	82.30	IE3	5.30	**E**	**C**	**2**	**3**	**P01**
	LE90ZLR6P	1.10	1 150	O. R.	2.8	0.66	75.0	O. R.	IE3	4.9	**E**	**M**	**2**	**3**	**P01**
100	LE100LLB6P	1.50	1 175	12.2	3.15	0.69	86.50	86.30	IE2	6.00	**F**	**M**	**2**	**3**	**P01**
112	LE112ZMKB6P	2.20	1 175	17.9	4.40	0.72	87.50	87.50	IE2	6.50	**G**	**J**	**2**	**3**	**P01**
132	LE132SH6P	3.00	1 180	24.3	5.70	0.75	87.50	87.80	IE2	6.10	**H**	**H**	**2**	**3**	**P01**
	LE132MJ6P	3.70	1 180	29.9	7.10	0.73	89.50	89.70	IE3	6.80	**H**	**K**	**2**	**3**	**P01**
	LE132ZMS6P	5.50	1 180	44.5	10.30	0.75	89.50	90.00	IE2	6.60	**H**	**L**	**2**	**3**	**P01**
160	LE160MW6P	7.50	1 185	60.4	14.00	0.75	89.50	89.70	IE2	5.60	**J**	**J**	**2**	**3**	**P01**
	LE160ZLW6P	11.00	1 180	89	20.50	0.75	90.20	90.50	IE2	5.70	**J**	**V**	**2**	**3**	**P01**
180	LES180LJ6P	15.00	1 178	121.6	26.00	0.79	91.70	92.00	IE3	6.80	**K**	**M**	**3**	**3**	**P01**
200	LES200LM6P	18.50	1 180	149.7	32.00	0.78	93.00	93.80	IE3	6.50	**L**	**L**	**3**	**3**	**P01**
	LES200ZLS6P	22.00	1 180	178	37.50	0.79	93.00	93.50	IE3	6.30	**L**	**M**	**3**	**3**	**P01**
225	LES225YMF6P	30.00	1 185	241.8	49.00	0.82	94.10	94.40	IE3	7.40	**M**	**K**	**3**	**3**	**P01**
250	LES250MD6P	37.00	1 188	297	59.00	0.83	94.10	94.40	IE3	7.80	**N**	**D**	**3**	**3**	**P01**

O. R. On request

© Siemens AG 2017

Selection and ordering data (continued)

Frame size	Motor	T_{St}/T_{rated}	T_{Bk}/T_{rated}	T_A/T_{rated}	L_{pfA}	L_{WA}	Z_0	J_{mot}	m_{mot}	Article No. Data position 9th	10th	11th	12th	Order code No. poles
		-	-	-	dB (A)	dB (A)	1/h	10^{-4} kgm²	kg					
4-pole, 1 800 rpm at 60 Hz, 50 Hz power														
80	LE80ZMQ4P	3.10	4.70	3.40	55	66	12 000	29	10.00	**D**	**F**	**2**	**3**	**-**
90	LE90SM4P	3.40	4.40	3.70	58	70	7 000	36	12.00	**E**	**K**	**2**	**3**	**-**
	LE90ZLR4P	3.00	4.30	3.30	58	70	6 000	49	15.00	**E**	**M**	**2**	**3**	**-**
100	LE100ZLSA4P	2.50	4.30	2.80	62	74	4 800	140	29.00	**F**	**N**	**2**	**3**	**-**
	LE100ZLSB4P	2.60	4.30	2.90	62	74	4 800	140	29.00	**F**	**P**	**2**	**3**	**-**
112	LE112ZMKB4P	2.90	4.30	O. R.	62	74	O. R.	170	29.00	**G**	**J**	**2**	**3**	**-**
132	LE132ZST4P	2.60	3.90	O. R.	68	80	O. R.	460	57.00	**H**	**J**	**2**	**3**	**-**
	LE132ZMS4P	2.40	4.00	O. R.	68	80	O. R.	460	57.00	**H**	**L**	**2**	**3**	**-**
160	LE160MPA4P	2.80	4.10	O. R.	69	81	O. R.	830	73.00	**J**	**Q**	**2**	**3**	**-**
	LE160MPB4P	2.30	3.70	O. R.	69	81	O. R.	830	73.00	**J**	**R**	**2**	**3**	**-**
	LE160ZLL4P	2.90	4.30	O. R.	69	81	O. R.	990	90.00	**J**	**U**	**2**	**3**	**-**
180	LES180MQ4P	2.70	3.60	3.00	68	75	O. R.	1 300	165.00	**K**	**L**	**3**	**3**	**-**
	LES180ZLN4P	2.80	3.70	3.10	70	77	O. R.	1 400	170.00	**K**	**N**	**3**	**3**	**-**
200	LES200ZLU4P	3.00	3.50	3.30	70	77	O. R.	2 200	240.00	**L**	**N**	**3**	**3**	**-**
225	LES225SD4P	2.80	3.00	2.20	60	73	O. R.	4 200	285.00	**M**	**F**	**3**	**3**	**-**
	LES225YMF4P	2.90	3.00	2.20	60	73	O. R.	4 700	320.00	**M**	**T**	**3**	**3**	**-**
250	LES250MD4P	2.80	3.20	2.30	60	74	O. R.	8 500	420.00	**N**	**M**	**3**	**3**	**-**
2-pole, 3 600 rpm at 60 Hz, 50 Hz power														
80	LE80ME2P	3.00	3.60	O. R.	64	75	O. R.	11	9.30	**D**	**B**	**2**	**3**	**P00**
	LE80ZMJ2P	3.30	4.50	O. R.	64	75	O. R.	13	10.00	**D**	**M**	**2**	**3**	**P00**
90	LE90SM2P	3.10	4.90	O. R.	69	81	O. R.	21	12.00	**E**	**K**	**2**	**3**	**P00**
	LE90ZLR2P	3.00	4.90	O. R.	69	81	O. R.	31	15.00	**E**	**M**	**2**	**3**	**P00**
100	LE100ZLK2P	3.10	5.20	O. R.	71	83	O. R.	54	26.00	**F**	**K**	**2**	**3**	**P00**
112	LE112ZMH2P	2.20	4.90	O. R.	73	85	O. R.	120	29.00	**G**	**G**	**2**	**3**	**P00**
132	LE132SF2P	2.10	4.20	O. R.	72	84	O. R.	240	36.00	**H**	**E**	**2**	**3**	**P00**
	LE132ZSQB2P	2.20	4.50	O. R.	72	84	O. R.	310	50.00	**H**	**H**	**2**	**3**	**P00**
160	LE160MG2P	3.20	4.30	O. R.	77	89	O. R.	530	65.00	**J**	**N**	**2**	**3**	**P00**
	LE160MM2P	3.20	4.90	O. R.	77	89	O. R.	610	74.00	**J**	**P**	**2**	**3**	**P00**
	LE160ZLJ2P	3.00	4.80	O. R.	77	89	O. R.	680	84.00	**J**	**T**	**2**	**3**	**P00**
6-pole, 1 200 rpm at 60 Hz, 50 Hz power														
90	LE90SQ6P	2.40	3.10	O. R.	46	58	O. R.	40	15.00	**E**	**C**	**2**	**3**	**P01**
	LE90ZLR6P	2.50	3.20	O. R.	O. R.	O. R.	O. R.	48	18.00	**E**	**M**	**2**	**3**	**P01**
100	LE100LLB6P	2.10	3.10	O. R.	62	74	O. R.	110	29.00	**F**	**M**	**2**	**3**	**P01**
112	LE112ZMKB6P	2.50	3.30	O. R.	65	77	O. R.	170	29.00	**G**	**J**	**2**	**3**	**P01**
132	LE132SH6P	1.70	2.80	O. R.	67	79	O. R.	290	36.00	**H**	**H**	**2**	**3**	**P01**
	LE132MJ6P	2.00	3.10	O. R.	67	79	O. R.	370	45.00	**H**	**K**	**2**	**3**	**P01**
	LE132ZMS6P	2.00	3.00	O. R.	67	79	O. R.	460	45.00	**H**	**L**	**2**	**3**	**P01**
160	LE160MW6P	2.30	2.50	O. R.	70	82	O. R.	980	83.00	**J**	**J**	**2**	**3**	**P01**
	LE160ZLW6P	2.20	2.50	O. R.	67	79	O. R.	1 200	105.00	**J**	**V**	**2**	**3**	**P01**
180	LES180LJ6P	2.50	3.00	2.80	61	68	O. R.	1 900	180.00	**K**	**M**	**3**	**3**	**P01**
200	LES200LM6P	2.80	3.00	3.10	64	71	O. R.	2 800	215.00	**L**	**L**	**3**	**3**	**P01**
	LES200ZLS6P	2.60	2.80	2.90	63	70	O. R.	3 200	230.00	**L**	**M**	**3**	**3**	**P01**
225	LES225YMF6P	2.90	3.30	2.30	59	72	O. R.	6 700	325.00	**M**	**K**	**3**	**3**	**P01**
250	LES250MD6P	3.10	3.20	2.40	61	75	O. R.	10 000	405.00	**N**	**D**	**3**	**3**	**P01**

O. R. On request

© Siemens AG 2017

Selection and ordering data (continued)

Frame size	Motor	P_{rated}	n_{rated}	T_{rated}	I_{rated}	cos φ	η		Efficiency class	I_{St}/I_{rated}	Article No.				Order code
					460 V		4/4 load	3/4 load	acc. to IEC		Data position				No. poles
		kW	rpm	Nm	A	-	%	%	60034-30	-	9th	10th	11th	12th	
4-pole, 1 800 rpm at 60 Hz, 60 Hz power															
80	LE80ZMQ4P	0.86	1 755	4.68	1.72	0.75	83.50	83.20	IE3	7.70	**D**	**F**	**2**	**3**	**-**
90	LE90SM4P	1.27	1 740	6.97	2.35	0.79	86.50	86.90	IE3	7.40	**E**	**K**	**2**	**3**	**-**
	LE90ZLR4P	1.75	1 740	9.6	3.15	0.80	86.50	87.00	IE3	7.50	**E**	**M**	**2**	**3**	**-**
100	LE100ZLSA4P	2.55	1 760	13.8	4.35	0.84	87.50	87.90	IE2	7.70	**F**	**N**	**2**	**3**	**-**
	LE100ZLSB4P	3.45	1 760	18.7	5.80	0.84	89.50	90.10	IE3	7.60	**F**	**P**	**2**	**3**	**-**
112	LE112ZMKB4P	4.55	1 770	24.5	7.70	0.83	89.50	89.50	IE3	8.20	**G**	**J**	**2**	**3**	**-**
132	LE132ZST4P	6.30	1 770	34	10.30	0.84	89.50	89.50	IE2	7.30	**H**	**J**	**2**	**3**	**-**
	LE132ZMS4P	8.60	1 770	46.4	13.80	0.85	89.50	89.50	IE2	7.50	**H**	**L**	**2**	**3**	**-**
160	LE160MPA4P	10.50	1 780	56.3	18.00	0.80	92.40	O. R.	IE3	7.80	**J**	**Q**	**2**	**3**	**-**
	LE160MPB4P	12.60	1 775	67.8	20.00	0.85	92.40	92.40	IE3	7.10	**J**	**R**	**2**	**3**	**-**
	LE160ZLL4P	18.00	1 775	96.8	28.00	0.83	93.60	93.60	IE3	8.50	**J**	**U**	**2**	**3**	**-**
180	LES180MQ4P	21.30	1 770	114.9	34.50	0.83	93.60	94.00	IE3	7.20	**K**	**L**	**3**	**3**	**-**
	LES180ZLN4P	25.30	1 770	136.5	41.00	0.83	93.60	94.10	IE3	6.80	**K**	**N**	**3**	**3**	**-**
200	LES200ZLU4P	34.50	1 770	186.1	55.00	0.85	93.00	93.50	IE2	7.30	**L**	**N**	**3**	**3**	**-**
225	LES225SD4P	42.50	1 778	228.3	66.00	0.86	93.60	94.10	IE2	6.70	**M**	**F**	**3**	**3**	**-**
	LES225YMF4P	52.00	1 778	279	81.00	0.86	94.10	94.60	IE2	6.60	**M**	**T**	**3**	**3**	**-**
250	LES250MD4P	63.00	1 782	338	97.00	0.87	94.10	94.50	IE2	6.70	**N**	**M**	**3**	**3**	**-**
2-pole, 3 600 rpm at 60 Hz, 60 Hz power															
80	LE80ME2P	0.86	3 450	2.38	1.65	0.86	77.00	77.50	IE3	6.40	**D**	**B**	**2**	**3**	**P00**
	LE80ZMJ2P	1.27	3 480	3.48	2.25	0.85	84.00	84.00	IE3	7.40	**D**	**M**	**2**	**3**	**P00**
90	LE90SM2P	1.75	3 510	4.76	2.95	0.87	85.50	85.50	IE3	8.70	**E**	**K**	**2**	**3**	**P00**
	LE90ZLR2P	2.55	3 510	6.94	4.20	0.88	86.50	86.50	IE3	8.30	**E**	**M**	**2**	**3**	**P00**
100	LE100ZLK2P	3.45	3 515	9.37	5.50	0.88	87.50	87.50	IE2	8.50	**F**	**K**	**2**	**3**	**P00**
112	LE112ZMH2P	4.55	3 550	12.2	7.20	0.89	87.50	87.50	IE2	7.60	**G**	**G**	**2**	**3**	**P00**
132	LE132SF2P	6.30	3 545	17	9.70	0.90	89.50	89.50	IE3	7.50	**H**	**E**	**2**	**3**	**P00**
	LE132ZSQB2P	8.60	3 550	23.1	13.00	0.92	90.20	90.20	IE3	8.20	**H**	**H**	**2**	**3**	**P00**
160	LE160MG2P	12.60	3 555	33.8	19.50	0.89	91.00	91.00	IE3	7.90	**J**	**N**	**2**	**3**	**P00**
	LE160MM2P	18.00	3 555	48.4	27.00	0.88	91.70	91.70	IE3	8.80	**J**	**P**	**2**	**3**	**P00**
	LE160ZLJ2P	22.00	3 555	59.1	32.00	0.91	91.70	91.70	IE3	9.00	**J**	**T**	**2**	**3**	**P00**
6-pole, 1 200 rpm at 60 Hz, 60 Hz power															
90	LE90SQ6P	0.86	1140	7.2	1.87	0.70	82.5	82.5	IE3	4.9	**E**	**C**	**2**	**3**	**P01**
	LE90ZLR6P	1.27	O. R.	O. R.	O. R.	O. R.	87.5	87.5	IE3	O. R.	**E**	**M**	**2**	**3**	**P01**
100	LE100LLB6P	1.75	1170	14	3.45	0.74	86.5	87.1	IE2	5.5	**F**	**M**	**2**	**3**	**P01**
112	LE112ZMKB6P	2.55	1170	21	4.90	0.75	87.5	88.1	IE2	5.9	**G**	**J**	**2**	**3**	**P01**
132	LE132SH6P	3.45	1175	28	6.4	0.77	87.5	88.5	IE2	5.4	**H**	**H**	**2**	**3**	**P01**
	LE132MJ6P	4.55	1175	37	8.5	0.77	87.5	88.5	IE2	5.7	**H**	**K**	**2**	**3**	**P01**
	LE132ZMS6P	6.3	1175	51	11.5	0.77	89.5	90.5	IE2	5.9	**H**	**L**	**2**	**3**	**P01**
160	LE160MW6P	8.6	1180	70	15.9	0.76	89.5	90.2	IE2	5.0	**J**	**J**	**2**	**3**	**P01**
	LE160ZLW6P	12.6	1175	102	23.0	0.77	90.2	91.0	IE2	5.1	**J**	**V**	**2**	**3**	**P01**
180	LES180LJ6P	18.0	1170	146.9	30.5	0.81	91.7	92.5	IE2	5.8	**K**	**M**	**3**	**3**	**P01**
200	LES200LM6P	22.0	1175	178.8	37.5	0.80	91.7	92.0	IE2	5.6	**L**	**L**	**3**	**3**	**P01**
	LES200ZLS6P	26.5	1175	215.4	44.0	0.81	93.0	94.0	IE2	5.5	**L**	**M**	**3**	**3**	**P01**
225	LES225YMF6P	36.0	1180	291	58	0.84	93.0	93.7	IE2	6.5	**M**	**K**	**3**	**3**	**P01**
250	LES250MD6P	44.5	1182	360	69	0.86	93.6	94.3	IE2	6.8	**N**	**D**	**3**	**3**	**P01**

O. R. On request

© Siemens AG 2017

Selection and ordering data (continued)

Frame size	Motor	T_{St}/T_{rated}	T_{Bk}/T_{rated}	T_A/T_{rated}	L_{pfA}	L_{WA}	Z_0	J_{mot}	m_{mot}	Article No.				Order code
										Data position				No. poles
		-	-	-	dB (A)	dB (A)	1/h	10^{-4} kgm²	kg	9th	10th	11th	12th	
4-pole, 1 800 rpm at 60 Hz, 60 Hz power														
80	LE80ZMQ4P	2.70	4.10	3.00	55	66	12 000	29	10.00	**D**	**F**	**2**	**3**	-
90	LE90SM4P	2.90	3.80	3.20	58	70	7 000	36	12.00	**E**	**K**	**2**	**3**	-
	LE90ZLR4P	2.60	3.70	2.90	58	70	6 000	49	15.00	**E**	**M**	**2**	**3**	-
100	LE100ZLSA4P	2.20	3.70	2.40	62	74	4 800	140	29.00	**F**	**N**	**2**	**3**	-
	LE100ZLSB4P	2.20	3.80	2.40	62	74	4 800	140	29.00	**F**	**P**	**2**	**3**	-
112	LE112ZMKB4P	2.90	4.30	2.70	62	74	O. R.	170	29.00	**G**	**J**	**2**	**3**	-
132	LE132ZST4P	2.30	3.40	2.70	68	80	O. R.	460	57.00	**H**	**J**	**2**	**3**	-
	LE132ZMS4P	2.10	3.50	2.50	68	80	O. R.	460	57.00	**H**	**L**	**2**	**3**	-
160	LE160MPA4P	2.40	3.50	O. R.	69	81	O. R.	830	73.00	**J**	**Q**	**2**	**3**	-
	LE160MPB4P	2.00	3.20	2.80	69	81	O. R.	830	73.00	**J**	**R**	**2**	**3**	-
	LE160ZLL4P	2.50	3.70	2.70	69	81	O. R.	990	90.00	**J**	**U**	**2**	**3**	-
180	LES180MQ4P	2.40	3.20	2.60	68	75	O. R.	1 300	165.00	**K**	**L**	**3**	**3**	-
	LES180ZLN4P	2.20	3.20	2.40	70	77	O. R.	1 400	170.00	**K**	**N**	**3**	**3**	-
200	LES200ZLU4P	2.40	3.00	2.60	70	77	O. R.	2 200	240.00	**L**	**N**	**3**	**3**	-
225	LES225SD4P	2.40	2.70	1.90	60	73	O. R.	4 200	285.00	**M**	**F**	**3**	**3**	-
	LES225YMF4P	2.60	2.60	2.00	60	73	O. R.	4 700	320.00	**M**	**T**	**3**	**3**	-
250	LES250MD4P	2.40	2.80	2.00	60	74	O. R.	8 500	420.00	**N**	**M**	**3**	**3**	-
2-pole, 3 600 rpm at 60 Hz, 60 Hz power														
80	LE80ME2P	2.60	3.10	O. R.	64	75	O. R.	11	9.30	**D**	**B**	**2**	**3**	**P00**
	LE80ZMJ2P	2.80	3.80	O. R.	64	75	O. R.	13	10.00	**D**	**M**	**2**	**3**	**P00**
90	LE90SM2P	2.60	4.20	O. R.	69	81	O. R.	21	12.00	**E**	**K**	**2**	**3**	**P00**
	LE90ZLR2P	2.60	4.20	O. R.	69	81	O. R.	31	15.00	**E**	**M**	**2**	**3**	**P00**
100	LE100ZLK2P	2.70	4.50	3.60	71	83	O. R.	54	26.00	**F**	**K**	**2**	**3**	**P00**
112	LE112ZMH2P	1.80	4.00	3.30	73	85	O. R.	120	29.00	**G**	**G**	**2**	**3**	**P00**
132	LE132SF2P	1.80	3.70	2.00	72	84	O. R.	240	36.00	**H**	**E**	**2**	**3**	**P00**
	LE132ZSQB2P	2.00	3.90	2.30	72	84	O. R.	310	50.00	**H**	**H**	**2**	**3**	**P00**
160	LE160MG2P	2.80	3.70	2.60	77	89	O. R.	530	65.00	**J**	**N**	**2**	**3**	**P00**
	LE160MM2P	2.70	4.20	2.90	77	89	O. R.	610	74.00	**J**	**P**	**2**	**3**	**P00**
	LE160ZLJ2P	2.60	4.20	2.90	77	89	O. R.	680	84.00	**J**	**T**	**2**	**3**	**P00**
6-pole, 1 200 rpm at 60 Hz, 60 Hz power														
90	LE90SQ6P	2.1	2.7	2.3	46	58	O. R.	40	15.00	**E**	**C**	**2**	**3**	**P01**
	LE90ZLR6P	O. R.	O. R.	O. R.	O. R.	O. R.	O. R.	48	18.00	**E**	**M**	**2**	**3**	**P01**
100	LE100LLB6P	1.9	2.8	O. R.	62	74	O. R.	110	29.00	**F**	**M**	**2**	**3**	**P01**
112	LE112ZMKB6P	2.2	2.8	O. R.	65	77	O. R.	170	29.00	**G**	**J**	**2**	**3**	**P01**
132	LE132SH6P	1.5	2.4	O. R.	67	79	O. R.	290	36.00	**H**	**H**	**2**	**3**	**P01**
	LE132MJ6P	1.7	2.5	O. R.	67	79	O. R.	370	45.00	**H**	**K**	**2**	**3**	**P01**
	LE132ZMS6P	1.8	2.6	O. R.	67	79	O. R.	460	45.00	**H**	**L**	**2**	**3**	**P01**
160	LE160MW6P	1.9	2.3	O. R.	70	82	O. R.	980	83.00	**J**	**J**	**2**	**3**	**P01**
	LE160ZLW6P	1.9	2.3	O. R.	67	79	O. R.	1 200	105.00	**J**	**V**	**2**	**3**	**P01**
180	LES180LJ6P	2.1	2.6	2.3	61	68	O. R.	1 900	180.00	**K**	**M**	**3**	**3**	**P01**
200	LES200LM6P	2.4	2.5	2.6	64	71	O. R.	2 800	215.00	**L**	**L**	**3**	**3**	**P01**
	LES200ZLS6P	2.3	2.4	2.5	63	70	O. R.	3 200	230.00	**L**	**M**	**3**	**3**	**P01**
225	LES225YMF6P	2.4	2.7	1.9	59	72	O. R.	6 700	325.00	**M**	**K**	**3**	**3**	**P01**
250	LES250MD6P	2.6	2.7	2.0	61	75	O. R.	10 000	405.00	**N**	**D**	**3**	**3**	**P01**

O. R. On request

© Siemens AG 2017

Selection and ordering data (continued)

Frame size	Motor	P_{rated}	n_{rated}	T_{rated}	I_{rated} 400 V	cos φ	η 4/4 load	3/4 load	T_{Bk}/T_{rated}	Article No. Data position 9th	10th	11th	12th	Order code Power	No. poles
		kW	rpm	Nm	A	-	%	%	-						
4-pole, 2 610 rpm at 87 Hz power															
80	LE80ZMQ4P	1.30	2 565	4.84	3.05	0.71	86.20	O. R.	3.9	**D**	**F**	**2**	**3**	**P91**	**-**
90	LE90SM4P	1.90	2 550	7.12	4.15	0.75	87.30	O. R.	3.6	**E**	**K**	**2**	**3**	**P91**	**-**
	LE90ZLR4P	2.60	2 555	9.72	5.30	0.76	88.00	O. R.	2.8	**E**	**M**	**2**	**3**	**P91**	**-**
100	LE100ZLSA4P	3.60	2 575	13.4	7.10	0.81	89.10	O. R.	3.8	**F**	**N**	**2**	**3**	**P91**	**-**
	LE100ZLSB4P	5.00	2 570	18.6	9.80	0.82	89.60	O. R.	3.9	**F**	**P**	**2**	**3**	**P91**	**-**
112	LE112ZMKB4P	6.50	2 575	24.1	13.00	0.81	90.20	O. R.	3.9	**G**	**J**	**2**	**3**	**P91**	**-**
132	LE132ZST4P	9.00	2 585	33.2	17.40	0.83	90.60	O. R.	3.6	**H**	**J**	**2**	**3**	**P91**	**-**
	LE132ZMS4P	12.50	2 580	46.3	23.50	0.83	91.20	O. R.	3.7	**H**	**L**	**2**	**3**	**P91**	**-**
160	LE160MPA4P	16.00	O. R.	O. R.	O. R.	O. R.	O. R.	O. R.	O. R.	**J**	**Q**	**2**	**3**	**P91**	**-**
	LE160MPB4P	17.00	2 585	62.8	32.50	0.83	92.00	O. R.	3.6	**J**	**R**	**2**	**3**	**P91**	**-**
	LE160ZLL4P	23.50	2 590	86.6	46.00	0.80	92.50	O. R.	4.2	**J**	**U**	**2**	**3**	**P91**	**-**
180	LES180MQ4P	27.20	2 585	100.0	53.0	O. R.	O. R.	O. R.	3.9	**K**	**L**	**3**	**3**	**P91**	**-**
	LES180ZLN4P	32.40	2 580	119.9	62.0	O. R.	O. R.	O. R.	3.9	**K**	**N**	**3**	**3**	**P91**	**-**
200	LES200ZLU4P	44.20	2 585	163.3	81.00	O. R.	O. R.	O. R.	3.7	**L**	**N**	**3**	**3**	**P91**	**-**
225	LES225YMF4P	71.0	2 588	262.0	128.00	0.86	93.40	7.80	2.8	**M**	**T**	**3**	**3**	**P91**	**-**
250	LES250MD4P	87.0	2 598	319.8	156.00	0.86	93.80	9.50	3.3	**N**	**M**	**3**	**3**	**P91**	**-**
6-pole, 1 740 rpm at 87 Hz power															
90	LE90SQ6P	1.30	1 685	7.37	3.35	0.66	84.50	O. R.	2.6	**E**	**C**	**2**	**3**	**P91**	**P01**
	LE90ZLR6P	1.90	1 685	10.8	4.95	0.65	85.30	O. R.	2.8	**E**	**M**	**2**	**3**	**P91**	**P01**
100	LE100LLB6P	2.60	1 710	14.5	6.20	0.70	87.10	O. R.	2.8	**F**	**M**	**2**	**3**	**P91**	**P01**
132	LE132SH6P	5.00	1 710	27.9	10.70	0.76	89.70	O. R.	2.5	**H**	**H**	**2**	**3**	**P91**	**P01**
	LE132MJ6P	6.50	1 715	36.2	13.80	0.73	91.20	O. R.	2.7	**H**	**K**	**2**	**3**	**P91**	**P01**
	LE132ZMS6P	9.00	1 715	50.1	18.80	0.76	90.90	O. R.	2.7	**H**	**L**	**2**	**3**	**P91**	**P01**
160	LE160MW6P	12.00	1 720	66.6	24.50	0.75	90.80	O. R.	2.5	**J**	**J**	**2**	**3**	**P91**	**P01**
	LE160ZLW6P	17.00	1 720	94.4	34.50	0.78	91.80	O. R.	2.5	**J**	**V**	**2**	**3**	**P91**	**P01**
180	LES180LJ6P	23.4	1 715	130.3	46.5	O. R.	O. R.	O. R.	3.1	**K**	**M**	**3**	**3**	**P91**	**P01**
200	LES200LM6P	28.5	1 720	158.2	56.0	O. R.	O. R.	O. R.	2.9	**L**	**L**	**3**	**3**	**P91**	**P01**
	LES200ZLS6P	34.3	1 720	190.4	68.0	O. R.	O. R.	O. R.	2.9	**L**	**M**	**3**	**3**	**P91**	**P01**
225	LES225YMF6P	47.0	1 720	261.0	O. R.	O. R.	O. R.	O. R.	O. R.	**M**	**K**	**3**	**3**	**P91**	**P01**
250	LES250MD6P	58.0	1 725	321.1	O. R.	O. R.	O. R.	O. R.	O. R.	**N**	**D**	**3**	**3**	**P91**	**P01**

O. R. On request

© Siemens AG 2017

Selection and ordering data (continued)

Frame size	Motor	L_{pfA}	L_{WA}	J_{mot}	m_{mot}	Article No. Data position 9th	10th	11th	12th	Order code	No. poles
		dB (A)	dB (A)	10^{-4} kgm²	kg						
4-pole, 2 610 rpm at 87 Hz power											
80	LE80ZMQ4P	O. R.	O. R.	29	10.00	**D**	**F**	**2**	**3**	**P91**	**-**
90	LE90SM4P	O. R.	O. R.	36	12.00	**E**	**K**	**2**	**3**	**P91**	**-**
	LE90ZLR4P	O. R.	O. R.	49	15.00	**E**	**M**	**2**	**3**	**P91**	**-**
100	LE100ZLSA4P	O. R.	O. R.	140	29.00	**F**	**N**	**2**	**3**	**P91**	**-**
	LE100ZLSB4P	O. R.	O. R.	140	29.00	**F**	**P**	**2**	**3**	**P91**	**-**
112	LE112ZMKB4P	O. R.	O. R.	170	29.00	**G**	**J**	**2**	**3**	**P91**	**-**
132	LE132ZST4P	O. R.	O. R.	460	57.00	**H**	**J**	**2**	**3**	**P91**	**-**
	LE132ZMS4P	O. R.	O. R.	460	57.00	**H**	**L**	**2**	**3**	**P91**	**-**
160	LE160MPA4P	O. R.	O. R.	830	73.00	**J**	**Q**	**2**	**3**	**P91**	**-**
	LE160MPB4P	O. R.	O. R.	830	73.00	**J**	**R**	**2**	**3**	**P91**	**-**
	LE160ZLL4P	O. R.	O. R.	990	90.00	**J**	**U**	**2**	**3**	**P91**	**-**
180	LES180MQ4P	O. R.	O. R.	1 300	165.00	**K**	**L**	**3**	**3**	**P91**	**-**
	LES180ZLN4P	O. R.	O. R.	1 400	170.00	**K**	**N**	**3**	**3**	**P91**	**-**
200	LES200ZLU4P	O. R.	O. R.	2 200	240.00	**L**	**N**	**3**	**3**	**P91**	**-**
225	LES225YMF4P	79	92	4 700	320.00	**M**	**T**	**3**	**3**	**P91**	**-**
250	LES250MD4P	80	93	8 500	420.00	**N**	**M**	**3**	**3**	**P91**	**-**
6-pole, 1 740 rpm at 87 Hz power											
90	LE90SQ6P	O. R.	O. R.	40	15.00	**E**	**C**	**2**	**3**	**P91**	**P01**
	LE90ZLR6P	O. R.	O. R.	48	18.00	**E**	**M**	**2**	**3**	**P91**	**P01**
100	LE100LLB6P	O. R.	O. R.	110	29.00	**F**	**M**	**2**	**3**	**P91**	**P01**
132	LE132SH6P	O. R.	O. R.	290	36.00	**H**	**H**	**2**	**3**	**P91**	**P01**
	LE132MJ6P	O. R.	O. R.	370	45.00	**H**	**K**	**2**	**3**	**P91**	**P01**
	LE132ZMS6P	O. R.	O. R.	460	45.00	**H**	**L**	**2**	**3**	**P91**	**P01**
160	LE160MW6P	O. R.	O. R.	980	83.00	**J**	**J**	**2**	**3**	**P91**	**P01**
	LE160ZLW6P	O. R.	O. R.	1 200	105.00	**J**	**V**	**2**	**3**	**P91**	**P01**
180	LES180LJ6P	O. R.	O. R.	1 900	180.00	**K**	**M**	**3**	**3**	**P91**	**P01**
200	LES200LM6P	O. R.	O. R.	2 800	215.00	**L**	**L**	**3**	**3**	**P91**	**P01**
	LES200ZLS6P	O. R.	O. R.	3 200	230.00	**L**	**M**	**3**	**3**	**P91**	**P01**
225	LES225YMF6P	O. R.	O. R.	6 700	325.00	**M**	**K**	**3**	**3**	**P91**	**P01**
250	LES250MD6P	O. R.	O. R.	10 000	405.00	**N**	**D**	**3**	**3**	**P91**	**P01**

O. R. On request

© Siemens AG 2017

Selection and ordering data

Frame size	Motor	P_{rated}		n_{rated}	T_{rated}	EISA CC no.	I_{rated} 460 V	cos φ	η 4/4 load	3/4 load	I_{St}/I_{rated}	T_{St}/T_{rated}
		kW	hp	rpm	Nm	CC032A	A	-	%	%	-	-
4-pole, 1 800 rpm at 60 Hz, 50 Hz power												
63	LA63MD4	0.09	0.12	1 695	0.51	-	0.41	0.60	46.00	41.00	3.30	3.20
	LA63ME4 [1]	0.12	0.16	1 670	0.69	-	0.42	0.68	54.10	51.80	3.20	2.30
	LA63MF4 [1]	0.18	0.25	1 690	1.02	-	0.56	0.70	58.80	56.40	3.30	2.30
71	LA71MG4	0.25	0.33	1 675	1.43	-	0.74	0.65	65.50	63.00	3.60	2.20
	LA71MH4	0.37	0.50	1 695	2.08	-	0.97	0.66	73.00	71.80	4.20	2.30
	LA71ZML4	0.55	0.75	1 680	3.13	-	1.41	0.68	72.20	71.00	4.20	2.50
80	LE80MD4E	0.55	0.75	1 750	3.00	-	1.17	0.74	80.00	80.00	5.70	2.40
	LE80ZMQ4P	0.75	1.00	1 760	4.07	✓	1.53	0.71	85.50	84.50	8.30	3.10
90	LE90SM4P	1.10	1.50	1 750	6.00	✓	2.10	0.75	86.50	86.30	8.20	3.40
	LE90ZLR4P	1.50	2.00	1 755	8.16	✓	2.85	0.77	86.50	87.00	8.40	3.00
100	LE100ZLSA4P	2.20	3.00	1 770	11.9	✓	3.80	0.81	89.50	89.50	9.60	3.50
	LE100ZLSB4P	3.00	4.00	1 760	16.3	✓	5.10	0.82	89.50	89.50	9.50	3.10
112	LE112ZMKB4P	3.70	5.00	1 770	20.0	✓	6.50	0.80	89.50	89.50	8.20	2.90
132	LE132ZST4P	5.50	7.50	1 780	29.5	✓	9.10	0.83	91.70	91.70	9.50	2.90
	LE132ZMS4P	7.50	10.00	1 770	40.5	✓	12.40	0.83	91.70	91.70	9.60	2.70
160	LE160MPA4P	9.20	12.30	O. R.	O. R.	✓	O. R.	O. R.	O. R.	O. R.	O. R.	O. R.
	LE160MPB4P	11.00	15.00	1 775	59.2	✓	18.00	0.83	92.40	92.40	8.90	3.00
	LE160ZLL4P	15.00	20.00	1 780	80.5	✓	25.00	0.81	93.00	93.00	9.50	2.90
180	LES180MQ4P	18.50	25.00	1 775	99.5	✓	30.50	0.81	93.60	93.70	7.80	2.70
	LES180ZLN4P	22.00	30.00	1 775	118.4	✓	36.50	0.81	93.60	93.80	7.70	2.80
200	LES200ZLU4P	30.00	40.00	1 778	161.1	✓	48.00	0.83	94.10	94.30	8.10	3.00
225	LES225SD4P	37.00	50.00	1 782	198.3	✓	58.00	0.85	94.50	94.70	7.50	2.80
	LES225YMF4P	45.00	60.00	1 782	241.1	✓	70.00	0.85	95.00	95.30	7.20	2.90
250	LES250MD4P	55.00	75.00	1 786	294	✓	84.00	0.86	95.40	95.60	7.60	2.80
2-pole, 3 600 rpm at 60 Hz, 50 Hz power												
63	LA63ME2 [1]	0.18	0.25	3 455	0.5	-	0.47	0.76	63.50	61.70	4.50	2.40
	LA63MF2 [1]	0.25	0.33	3 455	0.69	-	0.65	0.75	65.00	63.20	4.60	2.40
71	LA71MG2 [1]	0.37	0.50	3 410	1.04	-	0.91	0.76	67.00	65.10	5.00	2.90
	LA71MH2 [1]	0.55	0.75	3 440	1.53	-	1.25	0.78	71.10	70.00	5.40	3.00
80	LE80ME2P	0.75	1.00	3 480	2.06	✓	1.46	0.84	77.00	78.00	7.10	3.00
	LE80ZMJ2P	1.10	1.50	3 500	3	✓	1.98	0.83	84.00	84.00	8.40	3.30
90	LE90SM2P	1.50	2.00	3 525	4.06	✓	2.60	0.84	85.50	85.00	9.80	3.10
	LE90ZLR2P	2.20	3.00	3 530	5.95	✓	3.65	0.87	86.50	86.30	9.60	3.00
100	LE100ZLK2P	3.00	4.00	3 525	8.13	✓	4.90	0.87	88.50	88.50	9.70	3.80
112	LE112ZMH2P	3.70	5.00	3 565	9.91	✓	6.00	0.87	88.50	88.50	10.00	3.80
132	LE132SF2P	5.50	7.50	3 555	14.8	✓	8.60	0.90	89.50	89.50	8.60	2.10
	LE132ZSQB2P	7.50	10.00	3 555	20.1	✓	11.50	0.91	90.20	90.20	9.50	2.40
160	LE160MG2P	11.00	15.00	3 560	29.5	✓	17.20	0.88	91.00	91.00	8.50	2.80
	LE160MM2P	15.00	20.00	3 565	40.2	✓	24.00	0.86	91.00	91.00	9.70	3.10
	LE160ZLJ2P	18.50	25.00	3 560	49.6	✓	28.00	0.90	91.70	91.70	9.40	3.10

O. R. On request

[1] The technical specifications also apply to LAI63 and LAI71 motors (with IEC B14 flange) for worm geared motors S.

© Siemens AG 2017

Selection and ordering data (continued)

Frame size	Motor	T_{Bk}/T_{rated}	T_A/T_{rated}	L_{pfA}	L_{WA}	Z_0	J_{mot}	m_{mot}	Article No. Data position				Order code	
													No. poles	Specification
		-	-	dB (A)	dB (A)	1/h	10^{-4} kgm²	kg	9th	10th	11th	12th		UL-R/CSA
4-pole, 1 800 rpm at 60 Hz, 50 Hz power														
63	LA63MD4	3.30	O. R.	46	57	15 000	2.9	3.20	**B**	**B**	**1**	**1**	**-**	**N38**
	LA63ME4 [1]	2.40	O. R.	46	57	15 000	2.9	3.20	**B**	**C**	**1**	**1**	**-**	**N38**
	LA63MF4 [1]	2.30	O. R.	46	57	15 000	3.7	3.60	**B**	**D**	**1**	**1**	**-**	**N38**
71	LA71MG4	2.30	O. R.	48	59	15 000	5.2	4.30	**C**	**D**	**1**	**1**	**-**	**N38**
	LA71MH4	2.50	O. R.	48	59	15 000	7.7	5.80	**C**	**E**	**1**	**1**	**-**	**N38**
	LA71ZML4	2.50	2.30	48	59	7 000	11	8.10	**C**	**H**	**1**	**1**	**-**	**N38**
80	LE80MD4E	3.30	O. R.	55	66	10 000	17	9.30	**D**	**C**	**2**	**2**	**-**	**N38**
	LE80ZMQ4P	4.70	O. R.	55	66	O. R.	29	10.00	**D**	**F**	**2**	**3**	**-**	**N38**
90	LE90SM4P	4.40	O. R.	58	70	O. R.	36	12.00	**E**	**K**	**2**	**3**	**-**	**N38**
	LE90ZLR4P	4.30	O. R.	58	70	O. R.	49	15.00	**E**	**M**	**2**	**3**	**-**	**N38**
100	LE100ZLSA4P	5.10	O. R.	62	74	O. R.	140	29.00	**F**	**N**	**2**	**3**	**-**	**N38**
	LE100ZLSB4P	4.60	O. R.	62	74	O. R.	140	29.00	**F**	**P**	**2**	**3**	**-**	**N38**
112	LE112ZMKB4P	4.30	O. R.	62	74	O. R.	170	29.00	**G**	**J**	**2**	**3**	**-**	**N38**
132	LE132ZST4P	4.40	O. R.	68	80	O. R.	460	57.00	**H**	**J**	**2**	**3**	**-**	**N38**
	LE132ZMS4P	4.20	O. R.	68	80	O. R.	460	57.00	**H**	**L**	**2**	**3**	**-**	**N38**
160	LE160MPA4P	O. R.	O. R.	69	81	O. R.	830	73.00	**J**	**Q**	**2**	**3**	**-**	**N38**
	LE160MPB4P	3.80	O. R.	69	81	O. R.	830	73.00	**J**	**R**	**2**	**3**	**-**	**N38**
	LE160ZLL4P	4.30	O. R.	69	81	O. R.	990	90.00	**J**	**U**	**2**	**3**	**-**	**N38**
180	LES180MQ4P	3.60	3.00	68	75	O. R.	1 300	165.00	**K**	**L**	**3**	**3**	**-**	**N38**
	LES180ZLN4P	3.70	3.10	70	77	O. R.	1 400	170.00	**K**	**N**	**3**	**3**	**-**	**N38**
200	LES200ZLU4P	3.50	3.30	70	77	O. R.	2 200	240.00	**L**	**N**	**3**	**3**	**-**	**N38**
225	LES225SD4P	3.00	2.20	60	73	O. R.	4 200	285.00	**M**	**F**	**3**	**3**	**-**	**N38**
	LES225YMF4P	3.00	2.20	60	73	O. R.	4 700	320.00	**M**	**T**	**3**	**3**	**-**	**N38**
250	LES250MD4P	3.20	2.30	60	74	O. R.	8 500	420.00	**N**	**M**	**3**	**3**	**-**	**N38**
2-pole, 3 600 rpm at 60 Hz, 50 Hz power														
63	LA63ME2 [1]	2.70	O. R.	53	64	5 000	1.8	3.20	**B**	**C**	**1**	**1**	**P00**	**N38**
	LA63MF2 [1]	2.70	O. R.	53	64	5 000	2.2	3.60	**B**	**D**	**1**	**1**	**P00**	**N38**
71	LA71MG2 [1]	2.90	O. R.	56	67	5 000	2.9	4.50	**C**	**D**	**1**	**1**	**P00**	**N38**
	LA71MH2 [1]	2.90	O. R.	56	67	5 000	4.1	5.50	**C**	**E**	**1**	**1**	**P00**	**N38**
80	LE80ME2P	3.60	O. R.	64	75	O. R.	11	9.30	**D**	**B**	**2**	**3**	**P00**	**N38**
	LE80ZMJ2P	4.50	O. R.	64	75	O. R.	13	10.00	**D**	**M**	**2**	**3**	**P00**	**N38**
90	LE90SM2P	4.90	O. R.	69	81	O. R.	21	12.00	**E**	**K**	**2**	**3**	**P00**	**N38**
	LE90ZLR2P	4.90	O. R.	69	81	O. R.	31	15.00	**E**	**M**	**2**	**3**	**P00**	**N38**
100	LE100ZLK2P	5.50	O. R.	71	83	O. R.	54	26.00	**F**	**K**	**2**	**3**	**P00**	**N38**
112	LE112ZMH2P	5.60	O. R.	73	85	O. R.	120	29.00	**G**	**G**	**2**	**3**	**P00**	**N38**
132	LE132SF2P	4.40	O. R.	72	84	O. R.	240	36.00	**H**	**E**	**2**	**3**	**P00**	**N38**
	LE132ZSQB2P	4.70	O. R.	72	84	O. R.	310	50.00	**H**	**H**	**2**	**3**	**P00**	**N38**
160	LE160MG2P	4.30	O. R.	77	89	O. R.	530	65.00	**J**	**N**	**2**	**3**	**P00**	**N38**
	LE160MM2P	4.80	O. R.	77	89	O. R.	610	74.00	**J**	**P**	**2**	**3**	**P00**	**N38**
	LE160ZLJ2P	4.40	O. R.	77	89	O. R.	680	84.00	**J**	**T**	**2**	**3**	**P00**	**N38**

O. R. On request

[1] The technical specifications also apply to LAI63 and LAI71 motors (with IEC B14 flange) for worm geared motors S.

© Siemens AG 2017

Selection and ordering data

Frame size	Motor	P_{rated}		n_{rated}	T_{rated}	EISA CC no.	I_{rated} 460 V	cos φ	η 4/4 load	3/4 load	I_{St}/I_{rated}	T_{St}/T_{rated}
		kW	hp	rpm	Nm	CC032A	A	-	%	%	-	-
6-pole, 1 200 rpm at 60 Hz, 50 Hz power												
63	LA63MF6 [1]	0.09	0.12	1 075	0.8	-	0.38	0.63	47.10	44.90	2.20	2.10
	LA63MG6	0.12	0.16	1 100	1.04	-	0.73	0.53	39.40	33.80	2.10	2.70
71	LA71MG6 [1]	0.18	0.25	1 080	1.59	-	0.67	0.61	56.40	54.10	3.10	2.50
	LA71MH6 [1]	0.25	0.33	1 090	2.19	-	0.72	0.70	62.90	60.60	3.40	2.70
80	LE80MD6E	0.37	0.50	1 140	3.1	-	0.98	0.63	75.30	74.10	4.60	2.30
	LE80MK6E	0.55	0.75	1 135	4.63	-	1.47	0.61	77.00	77.50	5.20	2.90
90	LE90SQ6P	0.75	1.00	1 155	6.2	✓	1.76	0.65	82.50	82.30	5.30	2.40
100	LE100ZLSA6P	1.10	1.50	1 180	8.9	✓	2.30	0.69	87.50	87.20	6.70	2.40
112	LE112ZMKA6P	1.50	2.00	1 175	12.2	✓	2.90	0.73	88.50	88.30	6.90	2.20
132	LE132SQB6P	3.00	4.00	1 185	24.2	✓	5.60	0.75	89.50	89.60	7.50	2.30
	LE132SQA6P	2.20	3.00	1 185	17.7	✓	4.15	0.74	89.50	89.30	8.00	2.30
	LE132MJ6P	3.70	5.00	1 180	29.9	✓	7.10	0.73	89.50	89.50	7.60	2.40
	LE132ZMS6P	5.50	7.50	1 180	44.5	✓	10.30	0.74	91.00	91.30	7.20	2.30
160	LE160MW6P	7.50	10.00	1 185	60.4	✓	13.80	0.75	91.00	91.00	5.90	2.40
	LE160ZLW6P	11.00	15.00	1 180	89	✓	20.00	0.75	91.70	91.90	5.80	2.30
180	LES180LJ6P	15.00	20.00	1 178	121.6	✓	26.00	0.79	91.70	92.00	6.80	2.50
200	LES200LM6P	18.50	25.00	1 180	149.7	✓	32.00	0.78	93.00	93.80	6.50	2.80
	LES200ZLS6P	22.00	30.00	1 180	178	✓	37.50	0.79	93.00	93.50	6.30	2.60

O. R. On request

[1] The technical specifications also apply to LAI63 and LAI71 motors (with IEC B14 flange) for worm geared motors S.

© Siemens AG 2017

Selection and ordering data (continued)

Frame size	Motor	T_{Bk}/T_{rated}	T_A/T_{rated}	L_{pfA}	L_{WA}	Z_0	J_{mot}	m_{mot}	Article No. Data position				Order code	
													No. poles	Specification
		-	-	dB (A)	dB (A)	1/h	10^{-4} kgm²	kg	9th	10th	11th	12th		UL-R/CSA
6-pole, 1 200 rpm at 60 Hz, 50 Hz power														
63	LA63MF6 [1]	1.80	O. R.	43	54	10 500	3.7	3.60	**B**	**D**	**1**	**1**	**P01**	**N38**
	LA63MG6	2.80	O. R.	43	54	10 500	3.7	3.60	**B**	**E**	**1**	**1**	**P01**	**N38**
71	LA71MG6 [1]	2.50	O. R.	43	54	10 500	5.5	4.30	**C**	**D**	**1**	**1**	**P01**	**N38**
	LA71MH6 [1]	2.60	O. R.	43	54	10 500	8	5.30	**C**	**E**	**1**	**1**	**P01**	**N38**
80	LE80MD6E	2.90	O. R.	45	56	8 400	17	8.30	**D**	**C**	**2**	**2**	**P01**	**N38**
	LE80MK6E	3.60	O. R.	45	56	8 400	25	11.30	**D**	**F**	**2**	**2**	**P01**	**N38**
90	LE90SQ6P	3.10	O. R.	46	58	O. R.	40	15.00	**E**	**C**	**2**	**3**	**P01**	**N38**
100	LE100ZLSA6P	3.30	O. R.	62	74	O. R.	140	25.00	**F**	**N**	**2**	**3**	**P01**	**N38**
112	LE112ZMKA6P	3.20	O. R.	65	77	O. R.	170	29.00	**G**	**H**	**2**	**3**	**P01**	**N38**
132	LE132SQB6P	3.30	O. R.	67	79	O. R.	370	45.00	**H**	**H**	**2**	**3**	**P01**	**N38**
	LE132SQA6P	3.50	O. R.	67	79	O. R.	370	45.00	**H**	**G**	**2**	**3**	**P01**	**N38**
	LE132MJ6P	3.40	O. R.	67	79	O. R.	370	45.00	**H**	**K**	**2**	**3**	**P01**	**N38**
	LE132ZMS6P	3.30	O. R.	67	79	O. R.	460	45.00	**H**	**L**	**2**	**3**	**P01**	**N38**
160	LE160MW6P	2.60	O. R.	70	82	O. R.	980	83.00	**J**	**J**	**2**	**3**	**P01**	**N38**
	LE160ZLW6P	2.60	O. R.	70	82	O. R.	1 200	105.00	**J**	**V**	**2**	**3**	**P01**	**N38**
180	LES180LJ6P	3.00	2.80	61	68	O. R.	1 900	180.00	**K**	**M**	**3**	**3**	**P01**	**N38**
200	LES200LM6P	3.00	3.10	64	71	O. R.	2 800	215.00	**L**	**L**	**3**	**3**	**P01**	**N38**
	LES200ZLS6P	2.80	2.90	63	70	O. R.	3 200	230.00	**L**	**M**	**3**	**3**	**P01**	**N38**

O. R. On request

[1] The technical specifications also apply to LAI63 and LAI71 motors (with IEC B14 flange) for worm geared motors S.

© Siemens AG 2017

Selection and ordering data (continued)

Frame size	Motor	P_{rated}		n_{rated}	T_{rated}	EISA CC no.	I_{rated} 460 V	cos φ	η 4/4 load	η 3/4 load	I_{St}/I_{rated}	T_{St}/T_{rated}
		kW	hp	rpm	Nm	CC032A	A	-	%	%	-	-
4-pole, 1 800 rpm at 60 Hz, 60 Hz power												
63	LA63ME4 [1]	0.14	0.19	1 650	0.81	-	0.43	0.74	56.00	54.50	3.10	2.00
	LA63MF4 [1]	0.21	0.28	1 650	1.22	-	0.59	0.77	58.30	56.80	3.10	2.00
	LA63MD4	0.11	0.15	1 695	0.62	-	0.41	0.60	46.00	41.00	3.30	3.20
71	LA71MG4 [1]	0.29	0.39	1 650	1.68	-	0.76	0.77	61.90	60.40	3.30	1.90
	LA71MH4 [1]	0.43	0.58	1 669	2.46	-	1.08	0.76	65.80	64.80	3.80	2.00
	LA71ZML4	0.66	0.89	1 665	3.79	-	1.54	0.74	72.80	71.80	3.80	2.40
80	LE80MD4E	0.63	0.85	1 735	3.47	-	1.30	0.76	80.00	79.50	6.00	2.30
	LE80ZMQ4P	0.86	1.15	1 755	4.68	-	1.66	0.75	85.50	85.10	7.70	2.70
90	LE90SM4P	1.27	1.70	1 740	6.97	-	2.35	0.79	86.50	86.70	7.40	2.90
	LE90ZLR4P	1.75	2.35	1 740	9.6	-	3.15	0.80	86.50	87.00	7.50	2.60
100	LE100ZLSA4P	2.55	3.40	1 765	13.8	-	4.25	0.84	89.50	89.70	8.50	3.00
	LE100ZLSB4P	3.45	4.60	1 755	18.8	-	5.80	0.84	89.50	90.10	8.40	2.70
112	LE112ZMKB4P	4.55	6.10	1 760	24.7	-	7.70	0.83	89.50	89.50	7.30	2.50
132	LE132ZST4P	6.30	8.40	1 775	33.9	-	10.30	0.84	91.70	91.70	8.40	2.50
	LE132ZMS4P	8.60	11.50	1 765	46.5	-	13.80	0.85	91.70	91.70	8.40	2.30
160	LE160MPA4P	10.50	14.00	O. R.	O. R.	-	O. R.	O. R.	O. R.	O. R.	O. R.	O. R.
	LE160MPB4P	12.60	16.90	1 770	68	-	20.00	0.85	92.40	92.40	7.90	2.60
	LE160ZLL4P	18.00	24.00	1 775	96.8	-	28.00	0.83	93.60	93.60	8.50	2.50
180	LES180MQ4P	21.30	28.60	1 770	114.9	-	34.50	0.83	93.60	94.00	7.20	2.40
	LES180ZLN4P	25.30	33.90	1 770	136.5	-	41.00	0.83	93.60	94.10	6.80	2.20
200	LES200ZLU4P	34.50	46.30	1 770	186.1	-	55.00	0.85	93.00	93.50	7.30	2.40
2-pole, 3 600 rpm at 60 Hz, 60 Hz power												
63	LA63ME2 [1]	0.21	0.28	3 420	0.59	-	0.51	0.81	64.00	63.00	4.10	2.10
	LA63MF2 [1]	0.29	0.39	3 430	0.81	-	0.68	0.82	65.00	64.00	4.30	2.10
71	LA71MG2 [1]	0.43	0.58	3 340	1.23	-	1.00	0.82	66.00	65.00	4.50	2.50
	LA71MH2 [1]	0.63	0.85	3 400	1.77	-	1.36	0.82	71.00	71.00	4.90	2.60
80	LE80ME2P	0.86	1.15	3 450	2.38	-	1.63	0.86	77.00	78.00	6.40	2.60
	LE80ZMJ2P	1.27	1.70	3 480	3.48	-	2.25	0.85	84.00	84.00	7.40	2.80
90	LE90SM2P	1.75	2.35	3 510	4.76	-	2.95	0.87	85.50	85.60	8.70	2.60
	LE90ZLR2P	2.55	3.40	3 510	6.94	-	4.20	0.88	86.50	86.90	8.30	2.60
100	LE100ZLK2P	3.45	4.60	3 520	9.36	-	5.50	0.89	88.50	88.50	8.50	3.30
112	LE112ZMH2P	4.60	6.20	3 555	12.4	-	7.20	0.90	88.50	88.50	8.20	3.00
132	LE132SF2P	6.30	8.40	3 545	17	-	9.70	0.91	89.50	89.50	7.50	1.90
	LE132ZSQB2P	8.60	11.50	3 550	23.1	-	13.00	0.92	90.20	90.20	8.40	2.10
160	LE160MG2P	12.60	16.90	3 555	33.8	-	19.50	0.89	91.00	91.00	7.60	2.40
	LE160MM2P	18.00	24.00	3 560	48.3	-	27.00	0.88	91.70	91.70	8.70	2.70
	LE160ZLJ2P	22.00	30.00	3 550	59.2	-	32.00	0.91	91.70	91.70	8.20	2.70
6-pole, 1 200 rpm at 60 Hz, 60 Hz power												
63	LA63MF6	0.10	0.13	1 050	0.91	-	0.39	0.67	48.00	46.50	2.10	1.90
	LA63MG6	0.14	0.19	1 080	1.24	-	0.74	0.57	41.90	37.00	2.10	2.30
71	LA71MG6	0.21	0.28	1 035	1.94	-	0.69	0.67	57.30	55.80	3.00	2.10
	LA71MH6	0.29	0.39	1 030	2.69	-	0.78	0.75	61.90	60.40	3.10	2.30
80	LE80MD6E	0.43	0.58	1 125	3.65	-	1.04	0.69	75.30	75.30	4.20	2.10
	LE80MK6E	0.63	0.85	1 135	5.3	-	1.56	0.66	77.00	77.50	4.80	2.60
90	LE90SQ6P	0.86	1.15	1 140	7.2	-	1.87	0.70	82.50	83.00	4.90	2.10
100	LE100ZLSA6P	1.27	1.70	1 175	10.3	-	2.55	0.71	87.50	87.20	6.10	2.10
112	LE112ZMKA6P	1.75	2.35	1 170	14.3	-	3.25	0.76	88.50	88.70	6.20	2.00
132	LE132SQB6P	3.45	4.60	1 180	27.9	-	6.30	0.77	89.50	90.00	6.70	2.00
	LE132SQA6P	2.55	3.40	1 180	20.6	-	4.65	0.77	89.50	89.80	7.10	2.00
	LE132MJ6P	4.60	6.20	1 175	37.4	-	8.30	0.77	89.50	90.50	6.40	2.00
	LE132ZMS6P	6.30	8.40	1 175	51.2	-	11.30	0.77	91.00	91.80	6.60	2.00
160	LE160MW6P	8.60	11.50	1 180	69.6	-	15.60	0.76	91.00	91.40	5.20	2.00
	LE160ZLW6P	12.60	16.90	1 175	102.4	-	22.50	0.77	91.70	92.20	5.20	2.00
180	LES180LJ6P	18.00	24.00	1 170	146.9	-	30.50	0.81	91.70	92.50	5.80	2.10
200	LES200LM6P	22.00	30.00	1 175	178.8	-	37.50	0.80	91.70	92.00	5.60	2.40
	LES200ZLS6P	26.50	35.50	1 175	215.4	-	44.00	0.81	93.00	94.00	5.50	2.30

O. R. On request

[1] The technical specifications also apply to LAI63 and LAI71 motors (with IEC B14 flange) for worm geared motors S.

© Siemens AG 2017

Selection and ordering data (continued)

Frame size	Motor	T_{Bk}/T_{rated}	T_A/T_{rated}	L_{pfA}	L_{WA}	Z_0	J_{mot}	m_{mot}	Article No. Data position				Order code	
													No. poles	Specification
		-	-	dB (A)	dB (A)	1/h	10^{-4} kgm²	kg	9th	10th	11th	12th		UL-R/CSA
4-pole, 1 800 rpm at 60 Hz, 60 Hz power														
63	LA63ME4 [1]	2.10	O. R.	46	57	15 000	2.9	3.20	**B**	**C**	**1**	**1**	**-**	**N38**
	LA63MF4 [1]	2.00	O. R.	46	57	15 000	3.7	3.60	**B**	**D**	**1**	**1**	**-**	**N38**
	LA63MD4	3.30	O. R.	46	57	15 000	2.9	3.20	**B**	**B**	**1**	**1**	**-**	**N38**
71	LA71MG4 [1]	2.00	O. R.	48	59	15 000	5.2	4.30	**C**	**D**	**1**	**1**	**-**	**N38**
	LA71MH4 [1]	2.20	O. R.	48	59	15 000	7.7	5.80	**C**	**E**	**1**	**1**	**-**	**N38**
	LA71ZML4	2.40	2.20	50	61	7 000	11	8.10	**C**	**H**	**1**	**1**	**-**	**N38**
80	LE80MD4E	3.20	2.50	55	66	10 000	17	9.30	**D**	**C**	**2**	**2**	**-**	**N38**
	LE80ZMQ4P	4.10	O. R.	55	66	O. R.	29	10.00	**D**	**F**	**2**	**3**	**-**	**N38**
90	LE90SM4P	3.80	O. R.	58	70	O. R.	36	12.00	**E**	**K**	**2**	**3**	**-**	**N38**
	LE90ZLR4P	3.70	O. R.	58	70	O. R.	49	15.00	**E**	**M**	**2**	**3**	**-**	**N38**
100	LE100ZLSA4P	4.40	3.80	62	74	O. R.	140	29.00	**F**	**N**	**2**	**3**	**-**	**N38**
	LE100ZLSB4P	3.90	3.40	62	74	O. R.	140	29.00	**F**	**P**	**2**	**3**	**-**	**N38**
112	LE112ZMKB4P	3.80	3.10	62	74	O. R.	170	29.00	**G**	**J**	**2**	**3**	**-**	**N38**
132	LE132ZST4P	3.90	3.10	68	80	O. R.	460	57.00	**H**	**J**	**2**	**3**	**-**	**N38**
	LE132ZMS4P	3.60	2.90	68	80	O. R.	460	57.00	**H**	**L**	**2**	**3**	**-**	**N38**
160	LE160MPA4P	O. R.	O. R.	69	81	O. R.	830	73.00	**J**	**Q**	**2**	**3**	**-**	**N38**
	LE160MPB4P	3.30	3.30	69	81	O. R.	830	73.00	**J**	**R**	**2**	**3**	**-**	**N38**
	LE160ZLL4P	3.70	3.10	69	81	O. R.	990	90.00	**J**	**U**	**2**	**3**	**-**	**N38**
180	LES180MQ4P	3.20	2.60	68	75	O. R.	1 300	165.00	**K**	**L**	**3**	**3**	**-**	**N38**
	LES180ZLN4P	3.20	2.40	70	77	O. R.	1 400	170.00	**K**	**N**	**3**	**3**	**-**	**N38**
200	LES200ZLU4P	3.00	2.60	70	77	O. R.	2 200	240.00	**L**	**N**	**3**	**3**	**-**	**N38**
2-pole, 3 600 rpm at 60 Hz, 60 Hz power														
63	LA63ME2 [1]	2.30	O. R.	53	64	5 000	1.8	3.20	**B**	**C**	**1**	**1**	**P00**	**N38**
	LA63MF2 [1]	2.30	O. R.	53	64	5 000	2.2	3.60	**B**	**D**	**1**	**1**	**P00**	**N38**
71	LA71MG2 [1]	2.50	O. R.	56	67	5 000	2.9	4.50	**C**	**D**	**1**	**1**	**P00**	**N38**
	LA71MH2 [1]	2.50	O. R.	56	67	5 000	4.1	5.50	**C**	**E**	**1**	**1**	**P00**	**N38**
80	LE80ME2P	3.10	O. R.	64	75	O. R.	11	9.30	**D**	**B**	**2**	**3**	**P00**	**N38**
	LE80ZMJ2P	3.80	O. R.	64	75	O. R.	13	10.00	**D**	**M**	**2**	**3**	**P00**	**N38**
90	LE90SM2P	4.20	O. R.	69	81	O. R.	21	12.00	**E**	**K**	**2**	**3**	**P00**	**N38**
	LE90ZLR2P	4.20	O. R.	69	81	O. R.	31	15.00	**E**	**M**	**2**	**3**	**P00**	**N38**
100	LE100ZLK2P	4.70	4.10	71	83	O. R.	54	26.00	**F**	**K**	**2**	**3**	**P00**	**N38**
112	LE112ZMH2P	4.50	4.10	73	85	O. R.	120	29.00	**G**	**G**	**2**	**3**	**P00**	**N38**
132	LE132SF2P	3.80	2.30	72	84	O. R.	240	36.00	**H**	**E**	**2**	**3**	**P00**	**N38**
	LE132ZSQB2P	4.10	2.60	72	84	O. R.	310	50.00	**H**	**H**	**2**	**3**	**P00**	**N38**
160	LE160MG2P	3.70	3.00	77	89	O. R.	530	65.00	**J**	**N**	**2**	**3**	**P00**	**N38**
	LE160MM2P	4.20	3.40	77	89	O. R.	610	74.00	**J**	**P**	**2**	**3**	**P00**	**N38**
	LE160ZLJ2P	3.80	3.40	77	89	O. R.	680	84.00	**J**	**T**	**2**	**3**	**P00**	**N38**
6-pole, 1 200 rpm at 60 Hz, 60 Hz power														
63	LA63MF6	1.60	O. R.	43	54	10 500	3.7	3.60	**B**	**D**	**1**	**1**	**P01**	**N38**
	LA63MG6	2.30	O. R.	43	54	10 500	3.7	3.60	**B**	**E**	**1**	**1**	**P01**	**N38**
71	LA71MG6	2.10	O. R.	43	54	10 500	5.5	4.30	**C**	**D**	**1**	**1**	**P01**	**N38**
	LA71MH6	2.20	O. R.	43	54	10 500	8	5.30	**C**	**E**	**1**	**1**	**P01**	**N38**
80	LE80MD6E	2.60	2.30	45	56	8 400	17	8.30	**D**	**C**	**2**	**2**	**P01**	**N38**
	LE80MK6E	3.10	2.80	45	56	8 400	25	11.30	**D**	**F**	**2**	**2**	**P01**	**N38**
90	LE90SQ6P	2.70	2.60	46	58	O. R.	40	15.00	**E**	**C**	**2**	**3**	**P01**	**N38**
100	LE100ZLSA6P	2.80	O. R.	62	74	O. R.	140	25.00	**F**	**N**	**2**	**3**	**P01**	**N38**
112	LE112ZMKA6P	2.80	O. R.	65	77	O. R.	170	29.00	**G**	**H**	**2**	**3**	**P01**	**N38**
132	LE132SQB6P	2.90	O. R.	67	79	O. R.	370	45.00	**H**	**H**	**2**	**3**	**P01**	**N38**
	LE132SQA6P	3.10	O. R.	67	79	O. R.	370	45.00	**H**	**G**	**2**	**3**	**P01**	**N38**
	LE132MJ6P	2.80	O. R.	67	79	O. R.	370	45.00	**H**	**K**	**2**	**3**	**P01**	**N38**
	LE132ZMS6P	2.90	O. R.	67	79	O. R.	460	45.00	**H**	**L**	**2**	**3**	**P01**	**N38**
160	LE160MW6P	2.30	O. R.	70	82	O. R.	980	83.00	**J**	**J**	**2**	**3**	**P01**	**N38**
	LE160ZLW6P	2.30	O. R.	70	82	O. R.	1 200	105.00	**J**	**V**	**2**	**3**	**P01**	**N38**
180	LES180LJ6P	2.60	2.30	61	68	O. R.	1 900	180.00	**K**	**M**	**3**	**3**	**P01**	**N38**
200	LES200LM6P	2.50	2.60	64	71	O. R.	2 800	215.00	**L**	**L**	**3**	**3**	**P01**	**N38**
	LES200ZLS6P	2.40	2.50	63	70	O. R.	3 200	230.00	**L**	**M**	**3**	**3**	**P01**	**N38**

O. R. On request

[1] The technical specifications also apply to LAI63 and LAI71 motors (with IEC B14 flange) for worm geared motors S.

© Siemens AG 2017

Motor frame size LA63 to LE80

Overview

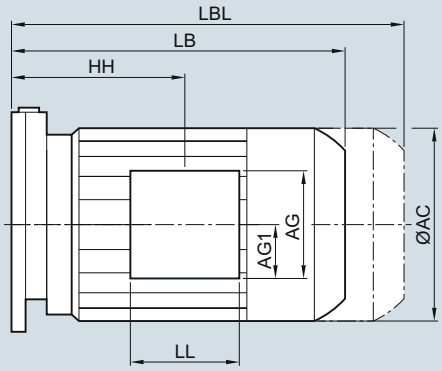

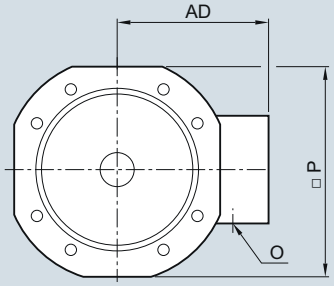

Motor	Gearbox type						Dimensions					Terminal box						
	D/Z	E	FD/FZ	B	K	C	P	HH	LB	LBL	AC	Type [1]	AD	LL	AG	AG1	O metric	O NPT
LA63	19	-	-	19	-	-	-	61.5	160.5	205.0	117.8	**gk127**	124.0	90	90	45.0	M20x1.5/ M25x1.5	2 x 1/2"
	29	-	29	29	-	29	120	95.0	194.0	238.5		**gk030**	101.0	75	75	37.5		-
	39	39	39	39	39	39						**TB1E10**	132.0	123	119.5	58.0		
	49	49	49	49	49	49	160	85.5	184.5	229.0								
	59	59	-	-	-	-												
	69	69	69	-	69	69												
	-	-	-	-	79	-												
LA71	19	-	-	19	-	-	-	93.5	184.5	239.5	138.8	**gk127**	134.0	90	90	45.0	M20x1.5/ M25x1.5	2 x 1/2"
	29	-	29	29	-	29	120	135.0	226.0	281.0		**gk030**	111.0	75	75	37.5		-
	39	39	39	39	39	39						**TB1E10**	142.0	123	119.5	58.0		
	49	49	49	49	49	49	160	125.5	216.5	271.5								
	59	-	-	-	-	-												
	69	69	69	-	69	69												
	-	-	-	-	79	-												
	79	79	79	-	-	-	198	123.5	214.5	269.5								
	-	-	-	-	89	89												
LA71Z	19	-	-	19	-	-	-	93.5	203.5	258.5	138.8	**gk127**	134.0	90	90	45.0	M20x1.5/ M25x1.5	2 x 1/2"
	29	-	29	29	-	29	120	135.0	245.0	300.0		**gk030**	111.0	75	75	37.5		-
	39	39	39	39	39	39						**TB1E10**	142.0	123	119.5	58.0		
	49	49	49	49	49	49	160	125.5	235.5	290.5								
	59	-	-	-	-	-												
	69	69	69	-	69	69												
	-	-	-	-	79	-												
	79	-	79	-	-	-	198	123.5	233.5	288.5								
	-	-	-	-	89	89												
LE80	19	-	-	19	-	-	0	120.0	240.0	300.0	156.3	**TB1E10**	149.2	123	119.5	58.0	M20x1.5/ M25x1.5	2 x 1/2"
	29	-	29	29	-	29	120	170.0	290.0	350.0		**TB1E00**	121.0	79	93	50.0		-
	39	39	39	39	39	39												
	49	49	49	49	49	49	160	160.5	280.5	340.5								
	59	-	-	-	-	-												
	69	69	69	-	69	69												
	-	-	-	-	79	-												
	79	-	79	-	-	-	198	154.5	274.5	334.5								
	-	-	-	-	89	89												
	89	89	89	-	-	-	245	141.5	261.5	321.5								
	-	-	-	-	109	-												

[1] Terminal box type is dependent on the motor options, see page 11/14.

© Siemens AG 2017

Overview

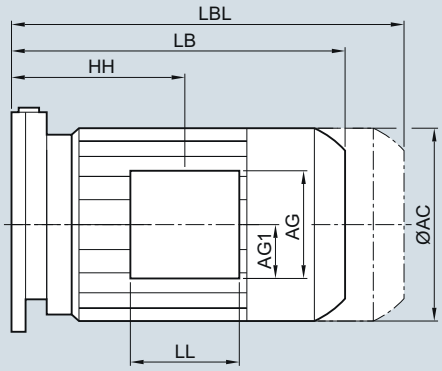

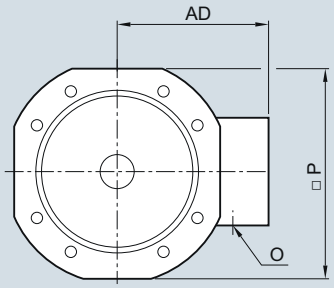

Motor	Gearbox type						Dimensions					Terminal box						
	D/Z	E	FD/FZ	B	K	C	P	HH	LB	LBL	AC	Type [1]	AD	LL	AG	AG1	O metric	O NPT
LE80Z	19	-	-	19	-	-	0	155.0	275.0	335.0	156.3	**TB1E10**	149.2	123	119.5	58.0	M20x1.5/ M25x1.5	2 x 1/2"
	29	-	29	29	-	29	120	205.0	325.0	385.0		**TB1E00**	121.0	79	93	50.0		-
	39	39	39	39	39	39												
	49	49	49	49	49	49	160	195.5	315.5	375.5								
	59	-	-	-	-	-												
	69	69	69	-	69	69												
	-	-	-	-	79	-												
	79	-	79	-	-	-	198	189.5	309.5	369.5								
	-	-	-	-	89	89												
	89	89	89	-	-	-	245	176.5	296.5	356.5								
	-	-	-	-	109	-												
LE90	29	-	29	29	-	29	120	207.5	351.5	421.5	173.8	**TB1E10**	154.2	123	119.5	58	M20x1.5/ M25x1.5	3/4"+1/2"
	39	39	39	39	39	39						**TB1E00**	126.0	79	93	50		-
	49	49	49	49	49	49	160	198.0	342.0	412.0								
	59	-	-	-	-	-												
	69	69	69	-	69	69												
	-	-	-	-	79	-												
	79	-	79	-	-	-	198	192.0	336.0	406.0								
	-	-	-	-	89	89												
	89	89	89	-	-	-	245	179.0	323.0	393.0								
	-	-	-	-	109	-												
	-	-	-	-	129	-	300	172.0	316.0	386.0								
	109	109	109	-	-	-												
	129	129	129	-	-	-	350	165.0	309.0	379.0								
	-	-	-	-	149	-												
LE90Z	29	-	29	29	-	29	120	247.5	391.5	461.5	173.8	**TB1E10**	154.2	123	119.5	58	M20x1.5/ M25x1.5	3/4"+1/2"
	39	39	39	39	39	39						**TB1E00**	126.0	79	93	50		-
	49	49	49	49	49	49	160	238.0	382.0	452.0								
	59	-	-	-	-	-												
	69	69	69	-	69	69												
	-	-	-	-	79	-												
	79	-	79	-	-	-	198	232.0	376.0	446.0								
	-	-	-	-	89	89												
	89	89	89	-	-	-	245	219.0	363.0	433.0								
	-	-	-	-	109	-												
	-	-	-	-	129	-	300	212.0	356.0	426.0								
	109	109	109	-	-	-												
	129	129	129	-	-	-	350	205.0	349.0	419.0								
	-	-	-	-	149	-												

[1] Terminal box type is dependent on the motor options, see page 11/14.

© Siemens AG 2017

Motor frame size LE100 to LE112

Overview (continued)

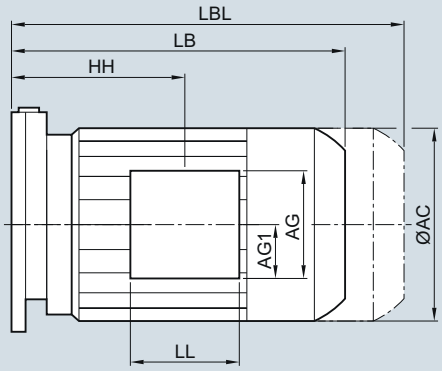

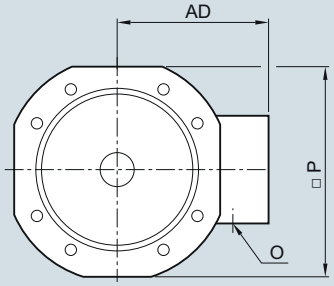

Motor	Gearbox type						Dimensions					Terminal box						
	D/Z	E	FD/FZ	B	K	C	P	HH	LB	LBL	AC	Type [1]	AD	LL	AG	AG1	O metric	O NPT
LE100	29	-	29	29	-	29	120	242.5	408.0	486.5	198.0	**TB1F10**	170.5	135	135	67.5	2xM32x1.5	3/4"+1/2"
	39	39	39	39	39	39						**TB1F00**	166.0	112	135	71.5		-
	49	49	49	49	49	49	160	233.0	398.5	477.0								
	59	-	-	-	-	-												
	69	69	69	-	69	69												
	-	-	-	-	79	-												
	79	-	79	-	-	-	198	227.0	392.5	471.0								
	-	-	-	-	89	89												
	89	89	89	-	-	-	245	210.0	375.5	454.0								
	-	-	-	-	109	-												
	-	-	-	-	129	-	300	201.0	366.5	445.0								
	109	109	109	-	-	-												
	129	129	129	-	-	-	350	192.0	357.5	436.0								
	-	-	-	-	149	-												
	149	149	149	-	169	-	405	190.5	356.0	434.5								
LE100Z	29	-	29	29	-	29	120	277.5	443.0	521.5	198.0	**TB1F10**	170.5	135	135	67.5	2xM32x1.5	3/4"+1/2"
	39	39	39	39	39	39						**TB1F00**	166.0	112	135	71.5		-
	49	49	49	49	49	49	160	268.0	433.5	512.0								
	59	-	-	-	-	-												
	69	69	69	-	69	69												
	-	-	-	-	79	-												
	79	-	79	-	-	-	198	262.0	427.5	506.0								
	-	-	-	-	89	89												
	89	89	89	-	-	-	245	245.0	410.5	489.0								
	-	-	-	-	109	-												
	-	-	-	-	129	-	300	236.0	401.5	480.0								
	109	109	109	-	-	-												
	129	129	129	-	-	-	350	227.0	392.5	471.0								
	-	-	-	-	149	-												
	149	149	149	-	169	-	405	225.5	391.0	469.5								
LE112	29	-	29	29	-	29	120	244.0	418.0	491.0	222.0	**TB1F10**	181.5	135	135	67.5	2xM32x1.5	3/4"+1/2"
	39	39	39	39	39	39						**TB1F00**	177.0	112	135	71.5		-
	49	49	49	49	49	49	160	234.5	408.5	481.5								
	59	-	-	-	-	-												
	69	69	69	-	69	69												
	-	-	-	-	79	-												
	79	-	79	-	-	-	198	228.5	402.5	475.5								
	-	-	-	-	89	89												
	89	89	89	-	-	-	245	211.5	385.5	458.5								
	-	-	-	-	109	-												
	-	-	-	-	129	-	300	202.5	376.5	449.5								
	109	109	109	-	-	-												
	129	129	129	-	-	-	350	193.5	367.5	440.5								
	-	-	-	-	149	-												
	149	149	149	-	169	-	405	192.0	366.0	439.0								
	169	169	169	-	-	-	465	179.5	353.5	426.5								
	189	189	189	-	189	-												

[1] Terminal box type is dependent on the motor options, see page 11/14.

© Siemens AG 2017

Overview (continued)

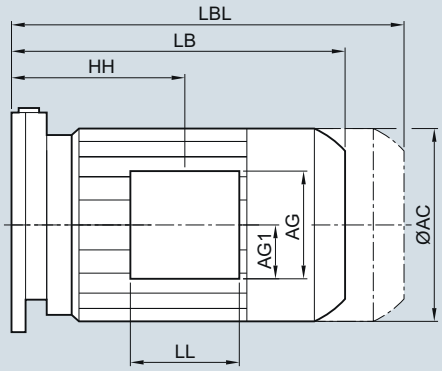

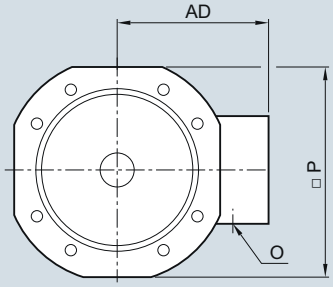

Motor	Gearbox type						Dimensions					Terminal box						
	D/Z	E	FD/FZ	B	K	C	P	HH	LB	LBL	AC	Type [1]	AD	LL	AG	AG1	O metric	O NPT
LE112Z	29	-	29	29	-	29	120	269.0	443.0	516.0	222.0	**TB1F10**	181.5	135	135	67.5	2xM32x1.5	3/4"+1/2"
	39	39	39	39	39	39						**TB1F00**	177.0	112	135	71.5		-
	49	49	49	49	49	49	160											
	59	-	-	-	-	-												
	69	69	69	-	69	69												
	-	-	-	-	79	-												
	79	-	79	-	-	-	198	253.5	427.5	500.5								
	-	-	-	-	89	89												
	89	89	89	-	-	-	245	236.5	410.5	483.5								
	-	-	-	-	109	-												
	-	-	-	-	129	-	300	227.5	401.5	474.5								
	109	109	109	-	-	-												
	129	129	129	-	-	-	350	218.5	392.5	465.5								
	-	-	-	-	149	-												
	149	149	149	-	169	-	405	217.0	391.0	464.0								
	169	169	169	-	-	-	465	204.5	378.5	451.5								
	189	189	189	-	189	-												
LE132	49	49	49	49	49	49	160	266.0	461.5	566.0	264.0	**TB1H10**	207.0	162	162	81.0	2xM32x1.5	3/4"+1/2"
	59	-	-	-	-	-						**TB1H00**	202.0	130	155	84.5		-
	69	69	69	-	69	69												
	-	-	-	-	79	-												
	79	-	79	-	-	-	198	260.0	455.5	560.0								
	-	-	-	-	89	89												
	89	89	89	-	-	-	245	243.0	438.5	543.0								
	-	-	-	-	109	-												
	-	-	-	-	129	-	300	234.0	429.5	534.0								
	109	109	109	-	-	-												
	129	129	129	-	-	-	350	223.0	418.5	523.0								
	-	-	-	-	149	-												
	149	149	149	-	169	-	405	216.5	412.0	516.5								
	169	169	169	-	-	-	465	203.5	399.0	503.5								
	189	189	189	-	189	-												
LE132Z	49	49	49	49	49	49	160	316.0	511.5	616.0	264.0	**TB1H10**	207.0	162	162	81.0	2xM32x1.5	3/4"+1/2"
	59	-	-	-	-	-						**TB1H00**	202.0	130	155	84.5		-
	69	69	69	-	69	69												
	-	-	-	-	79	-												
	79	-	79	-	-	-	198	310.0	505.5	610.0								
	-	-	-	-	89	89												
	89	89	89	-	-	-	245	293.0	488.5	593.0								
	-	-	-	-	109	-												
	-	-	-	-	129	-	300	284.0	479.5	584.0								
	109	109	109	-	-	-												
	129	129	129	-	-	-	350	273.0	468.5	573.0								
	-	-	-	-	149	-												
	149	149	149	-	169	-	405	266.5	462.0	566.5								
	169	169	169	-	-	-	465	253.5	499	553.5								
	189	189	189	-	189	-												

[1] Terminal box type is dependent on the motor options, see page 11/14.

© Siemens AG 2017

Motor frame size LE160 to LES180

Overview (continued)

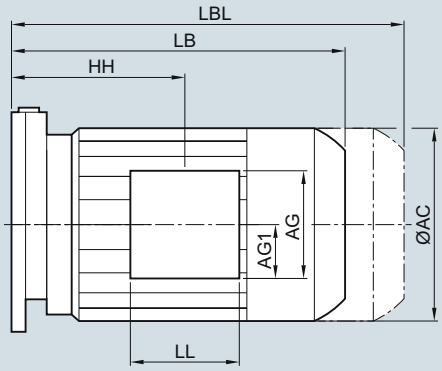

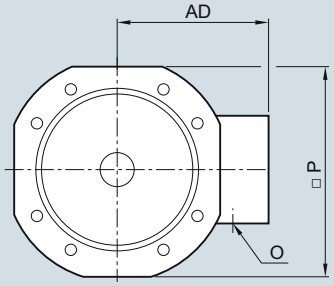

Motor	Gearbox type						Dimensions					Terminal box						
	D/Z	E	FD/FZ	B	K	C	P	HH	LB	LBL	AC	Type [1]	AD	LL	AG	AG1	O metric	O NPT
LE160	49	49	49	49	49	49	160	299.5	543.5	659.5	318.0	**TB1J10**	241.0	180	180	90.0	2xM40x1.5	1 1/4"+1/2"
	59	-	-	-	-	-						**TB1J00**	236.5	145	175	97.5		-
	69	69	69	-	69	69												
	-	-	-	-	79	-												
	79	-	79	-	-	-	198	293.5	537.5	653.5								
	-	-	-	-	89	89												
	89	89	89	-	-	-	245	276.5	520.5	636.5								
	-	-	-	-	109	-												
	-	-	-	-	129	-	300	267.5	511.5	627.5								
	109	109	109	-	-	-												
	129	129	129	-	-	-	350	256.5	500.5	616.5								
	-	-	-	-	149	-												
	149	149	149	-	169	-	405	250.0	494.0	610.0								
	169	169	169	-	-	-	465	237.0	481.0	597.0								
	189	189	189	-	189	-												
LE160Z	49	49	49	49	49	49	160	359.5	603.5	719.5	318.0	**TB1J10**	241.0	180	180	90.0	2xM40x1.5	1 1/4"+1/2"
	59	-	-	-	-	-						**TB1J00**	236.5	145	175	97.5		-
	69	69	69	-	69	69												
	-	-	-	-	79	-												
	79	-	79	-	-	-	198	353.5	597.5	713.5								
	-	-	-	-	89	89												
	89	89	89	-	-	-	245	336.5	580.5	696.5								
	-	-	-	-	109	-												
	-	-	-	-	129	-	300	327.5	571.5	687.5								
	109	109	109	-	-	-												
	129	129	129	-	-	-	350	316.5	560.5	676.5								
	-	-	-	-	149	-												
	149	149	149	-	169	-	405	310.0	554.0	670.0								
	169	169	169	-	-	-	465	297.0	541.0	657.0								
	189	189	189	-	189	-												
LES180	89	89	89	-	-	-	245	336.0	593.5	722.5	352.5	**TB1K01**	292.0	197	265	153	2xM40x1.5	1 1/2"+1/2"
	-	-	-	-	109	-												
	-	-	-	-	129	-	300	327.0	584.5	713.5								
	109	109	109	-	-	-												
	129	129	129	-	-	-	350	316.0	573.5	702.5								
	-	-	-	-	149	-												
	149	149	149	-	169	-	405	309.5	567.0	696.0								
	169	169	169	-	-	-	465	296.0	553.5	682.5								
	189	189	189	-	189	-												

[1] Terminal box type is dependent on the motor options, see page 11/14.

© Siemens AG 2017

Overview (continued)

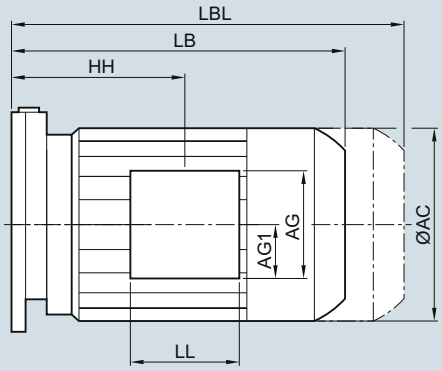

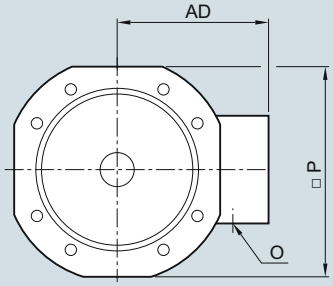

Motor	Gearbox type						Dimensions					Terminal box						
	D/Z	E	FD/FZ	B	K	C	P	HH	LB	LBL	AC	Type [1]	AD	LL	AG	AG1	O metric	O NPT
LES180Z	89	89	89	-	-	-	245	366.0	623.5	752.5	352.5	**TB1K01**	292.0	197	265	153	2xM40x1.5	1 1/2"+1/2"
	-	-	-	-	109	-												
	-	-	-	-	129	-	300	357.0	614.5	743.5								
	109	109	109	-	-	-												
	129	129	129	-	-	-	350	346.0	603.5	732.5								
	-	-	-	-	149	-												
	149	149	149	-	169	-	405	339.5	597.0	726.0								
	169	169	169	-	-	-	465	326.0	583.5	712.5								
	189	189	189	-	189	-												
LES200	-	-	-	-	129	-	300	391.5	652.5	799.5	392.5	**TB1L01**	315.0	197	266	154	2xM50x1.5	1 1/2"+1/2"
	109	109	109	-	-	-												
	129	129	129	-	-	-	350	380.5	641.5	788.5								
	-	-	-	-	149	-												
	149	149	149	-	169	-	405	374.0	635.0	782.0								
	169	169	169	-	-	-	465	360.5	621.5	768.5								
	189	189	189	-	189	-												
LES200Z	-	-	-	-	129	-	300	416.5	677.5	824.5	392.5	**TB1L01**	315.0	197	266	154	2xM50x1.5	1 1/2"+1/2"
	109	109	109	-	-	-												
	129	129	129	-	-	-	350	405.5	666.5	813.5								
	-	-	-	-	149	-												
	149	149	149	-	169	-	405	399.0	660.0	807.0								
	169	169	169	-	-	-	466	385.5	646.5	793.5								
	189	189	189	-	189	-												
LES225	-	-	-	-	129	-	300	420.0	698.0	937.0	439.0	**TB1L01**	337.0	197	266	154	2xM50x1.5	1 1/2"+1/2"
	109	109	109	-	-	-						**TB1N01**	407.5	233	319	174	2xM63x1.5	-
	129	129	129	-	-	-	350	415.0	693.0	932.0								
	-	-	-	-	149	-												
	149	149	149	-	169	-	405	402.5	680.5	919.5								
	169	169	169	-	-	-	465	388.0	666.0	905.0								
	189	189	189	-	189	-												
LES225Y	-	-	-	-	129	-	300	480.0	758.0	997.0	439.0	**TB1L01**	337.0	197	266	154	2xM50x1.5	1 1/2"+1/2"
	109	109	109	-	-	-						**TB1N01**	407.5	233	319	174	2xM63x1.5	-
	129	129	129	-	-	-	350	475.0	753.0	992.0								
	-	-	-	-	149	-												
	149	149	149	-	169	-	405	462.5	740.5	979.5								
	169	169	169	-	-	-	465	448.0	726.0	965.0								
	189	189	189	-	189	-												
LES250	129	129	129	-	-	-	350	487.5	798.5	1 023.5	487.0	**TB1N01**	407.5	233	319	174	2xM63x1.5	2 1/2"+1/2"
	-	-	-	-	149	-						**TB1Q01**	457.0	299	374	210	2xM63x1.5	-
	149	149	149	-	169	-	405	481.0	792.0	1 017.0								
	169	169	169	-	-	-	465	462.5	773.5	998.5								
	189	189	189	-	189	-												

[1] Terminal box type is dependent on the motor options, see page 11/14.

© Siemens AG 2017

Motors for worm geared motors S

Motors with B14 flange

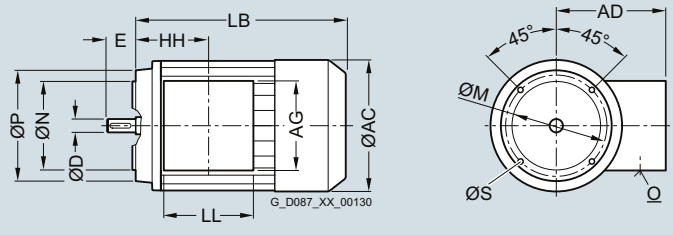

Motor	P	HH	LB	AC	N	M	S	D	E	AD	LL	AG	O
LAI63	90	69.5	179.5	118.0	60	75	M5	11	23	101.0	75	75	M20x1.5/M25x1.5
										115.0 [1]	90 [1]	90 [1]	
										135.5 [2]	90 [2]	90 [2]	
LAI71	105	63.5	210.0	139.0	70	85	M6	14	30	111.0	75	75	M20x1.5/M25x1.5
										125.0 [1]	90 [1]	90 [1]	
										146.0 [2]	90 [2]	90 [2]	

[1] for motors with more than 6 terminals and 2 auxiliary terminals
[2] for motors with encoder or brake

8

Motors with brake and B14 flange, or with encoder and without brake and B14 flange

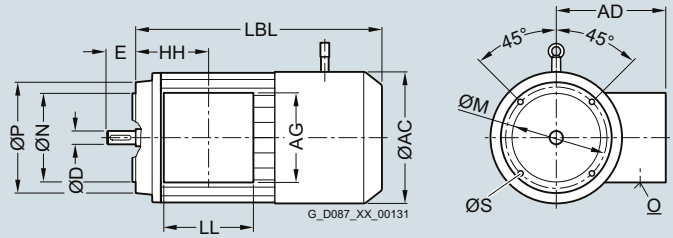

Motor	P	HH	LBL	AC	N	M	S	D	E	AD	LL	AG	O
LAI63	90	69.5	230.5	118.0	60	75	M5	11	23	135.5	90	90	M20x1.5/M25x1.5
LAI71	105	63.5	261.5	139.0	70	85	M6	14	30	146.0	90	90	M20x1.5/M25x1.5

© Siemens AG 2017

Second shaft extension, handwheel and canopy

Further information about the second shaft extension, the handwheel and the canopy can be found in chapter "Motor options" page 11/63.

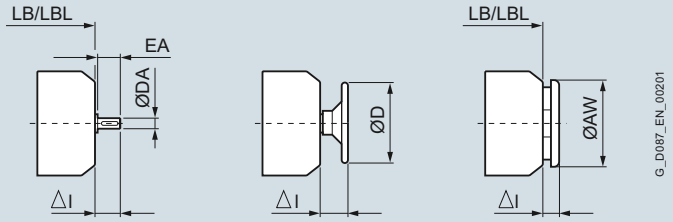

Fig. 1 Fig. 6 Fig. 2

Relevant figure	**1**			**6**		**2**	
Motor	**Second shaft extension**			**Handwheel at the second shaft extension**		**Canopy**	
	DA	EA	ΔI	D	ΔI	AW	ΔI
LAI63 [1]	-	-	-	-	-	124	27
LAI71 [1]	-	-	-	-	-	124	27
LA63	-	-	-	-	-	122.8	11.9
LA71	14	30	34	100	50	137.8	25.9
LA71Z							
LE80	14	30	34	100	50	137.8	25.9
LE80Z							
LE90	19	40	45	160	65	175.8	16
LE90Z							
LE100	19	40	45	160	65	195	40
LE100Z							
LE112	24	50	56	200	77	195	40
LE112Z							
LE132	28	60	68	200	89	260	60
LE132Z							
LE160	38	80	88	315	111	260	60
LE160Z	38	80	88	315	111	260	60
LES180	42	110	125	-	-	340	90
LES180Z							
LES200	48	110	130	-	-	340	90
LES200Z							
LES225	55	110	115	-	-	425	96
LES225Y							
LES250	60	140	145	-	-	470	96

[1] Only for worm geared motors S

© Siemens AG 2017

Additional lengths

Encoder

Further information about the encoder can be found in chapter "Motor options" from page 11/40.

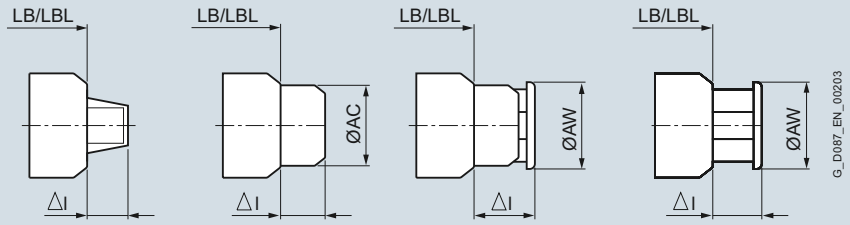

Fig. 3 Fig. 4 Fig. 5 Fig. 7

Relevant figure	**3**	**4**			**5**			**7**			
Motor	**Encoder with protective plate**	**Encoder under cover**			**Encoder under cover with canopy**			**Encoder with canopy**			
	ΔI	AC	ΔI		AW	ΔI		AW	ΔI		
	1XP		1XP IN 8.5834 IA 8.5883	LL, HOG9, HOG10		1XP	LL, HOG9, HOG10		1XP	LL, HOG9	HOG10
LAI63 [1]	70	-	-	-	-	-	-	-	-	-	-
LAI71 [1]	70	-	-	-	-	-	-	-	-	-	-
LA63	70	-	-	-	-	-	-	-	-	-	-
LA71	70	139	92.5	-	138	118.5	-	-	-	-	-
LA71Z											
LE80	70	156.5	92.5	-	138	118.5	-	155	67.5	-	-
LE80Z											
LE90	70	174	92.5	-	176	107	-	155	67.5	-	-
LE90Z											
LE100	-	174	93.5	-	176	108	-	195	83	-	-
LE100Z											
LE112	-	195	95.0	-	194	111	-	195	83	83	-
LE122Z											
LE132	-	195	95.0	-	194	111	-	260	87	87	130
LE132Z	-			-			-	260	87	87	
LE160	-	195	95.0	-	310	111	-	260	87	87	130
LE160Z	-			-			-	260	87	87	
LE180	-	195	95.0	-	310	111	-	340	91	91	131
LE180Z											
LES200	-	195	95.0	-	310	111	-	340	91	91	131
LES200Z											
LES225	-	-	-	-	-	-	-	425	158.2	124.5	158.2
LES225Y											
LES250	-	-	-	-	-	-	-	472	158.2	124.5	158.2

[1] Only for worm geared motors S

© Siemens AG 2017

Prepared for encoder mounting

Further information about "prepared for encoder mounting" can be found in chapter "Motor options" on page 11/56.

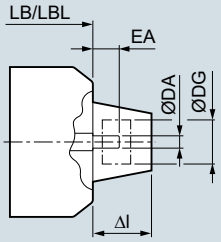

Fig. 1

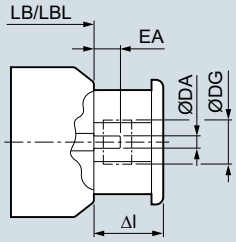

Fig. 2

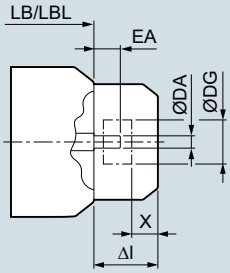

Fig. 3

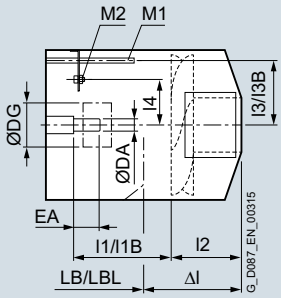

Fig. 4

Relevant figure				**1**	**2**	**3**		**4**									
Motor				**Encoder prepared with protective plate**	**Encoder prepared under canopy**	**Encoder prepared under cover**		**Encoder prepared + separately driven fan + with / without brake**									
	DA	EA	DG	ΔI	ΔI	ΔI	X	ΔI	I1	I2	I3	Brake	I1B	I3B	I4	M1	M2
LA63	12	25	Max. 60	70	-	-	-	-	-	-	-	-	-	-	-	-	-
LA71		30				92.5	Min. 10	229.5	134.5	95	59.0	L4, L8	115.0	59.0	37	M5x120	2xM4
LA71Z																	
LE80		30 (25)[1]			67.5			213.0	121.2	95	56.0	L4, L8	95.5	67.0		M6x130	
												L16	95.5	56.0			
LE80Z												L4, L8	95.5	67.0			
												L16	95.5	56.0			
LE90								213.0	109.4	105	66.0	L8, L16	93.5	75.0			
												L32	93.5	66.0			
LE90Z												L8, L16	93.5	75.0			
												L32	93.5	66.0			
LE100	-	25		-	83	93.5		218.5	115.3	105	66.0	L16, L32	97.0	85.0			
												L60	97.0	72.5		M8x160	
LE100Z												L16, L32	97.0	85.0		M6x130	
												L60	97.0	72.5		M8x160	
LE112						95.0		206.0	115.5	105	72.5	L32, L60	93.5	95.0			
LE112Z																	
LE132					87			258.5	132.0	127	98.0	L80	97.5	116.0			
												L150	97.5	98.0			
LE132Z												L80	97.5	116.0			
												L150	97.5	98.0			
LE160								285.0	147.0	152	115.0	L150, L260	93.0	141.0		M8x170	
LE160Z												L150, L260	93.0	141.0			
LES180					91			274.0	162.0	151.5	157.0	L260	95.0	157.0		M10x210	
LES180Z																	
LES200								293.0	136.5	151.5	175.0	L260, L400	96.0	175.0			
LES200Z																	

[1] Value in parenthesis applies to motor with separately driven fan and brake

© Siemens AG 2017

Additional lengths

Separately driven fan, encoder and canopy

Further information about the separately driven fan can be found in chapter "Motor options" on page 11/10.

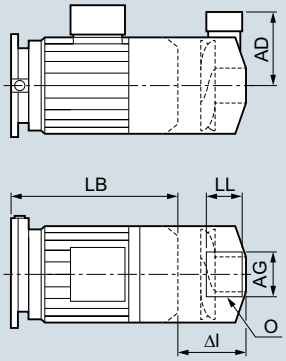

LA71 ... LES200
Fig. 8

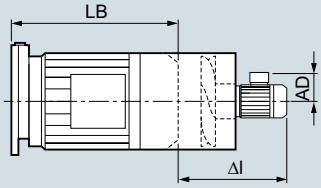

LES225 ... LES250
Fig. 8

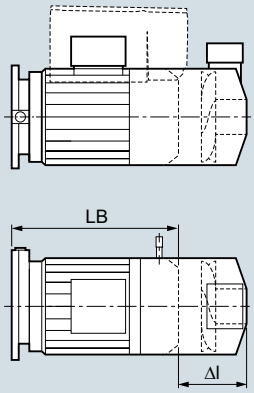

Fig. 9

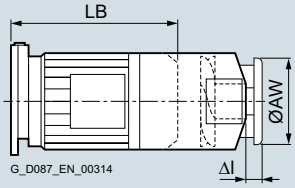

Fig. 10

Relevant figure	8					9	9		9			9	10	
Motor	Separately driven fan					Brake + separately driven fan	Encoder + separately driven fan		Brake + encoder + separately driven fan			SINAMICS G110M	Canopy for separately driven fan	
	ΔI	AD	LL	AG	O	ΔI	ΔI		ΔI			ΔI	ΔI	AW
							1XP	LL, HOG9, HOG10	1XP	LL, HOG9	HOG10			
LA63	-	-	-	-	-	-	-	-	-	-	-	-	-	-
LA71	110.5	122.5	95	105	M16x1.5	134.5	229.5	-	229.5	-	-	229.5	37	150
LA71Z														
LE80	89	130	95	105	M16x1.5	118	213	-	213	-	-	213	40	170
LE80Z														
LE90	85	140.5	95	105	M16x1.5	120	213	-	213	-	-	213	30	188
LE90Z														
LE100	81.5	149	95	105	M16x1.5	121.5	218.5	-	218.5	-	-	218.5	28	210
LE100Z														
LE112	81	161	95	105	M16x1.5	113	206	-	206	-	-	206	33	249
LE112Z														
LE132	114.5	185	95	105	M16x1.5	164.5	258.5	258.5	258.5	258.5	302.5	-	25	300
LE132Z														
LE160	131	211	95	105	M16x1.5	191	285	285	285	285	329	-	32	338
LE160Z														
LES180	132	211	95	105	M16x1.5	199	274	274	274	274	319	-	32	338
LES180Z														
LES200	141	211	95	105	M16x1.5	233	293	293	293	293	337	-	32	338
LES200Z														
LES225	227.5	101	-	-	M25x1.5 + M16x1.5	-	-	786.5	-	-	-	-	258	470
LES225Y		101	-	-										
LES250	232.5	101	-	-	M25x1.5 + M16x1.5	-	-	826.5	-	-	-	-	256	525

© Siemens AG 2017

Overview

Further information about the application terminal box can be found in chapter "Motor options" on page 11/60.

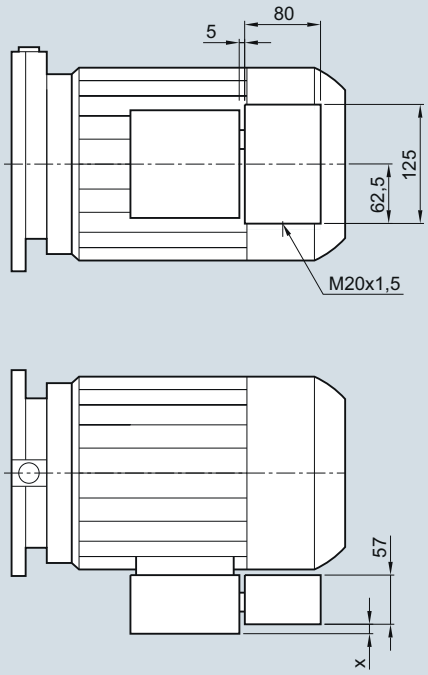

Motor	x	Terminal box type
LA63	2.5 (3.5)	gk127 (TB1E10)
LA71	2.5 (3.5)	
LE80	3.5	TB1E10
LE90	3.5	
LE100	7.0	TB1F10
LE112	7.0	
LE132	11.5	TB1H10
LE160	19.8	TB1J10
LES180	38.0	TB1K01
LES200	39.0	TB1L01

() Dimension or terminal box type in parenthesis for terminal box with 9 terminals (YY/Y connection)

© Siemens AG 2017

HAN10E motor plug

Overview

Further information about the motor plug can be found in
chapter "Motor options" on page 11/16.

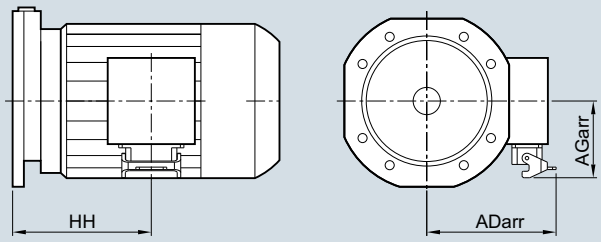

Fig. 1

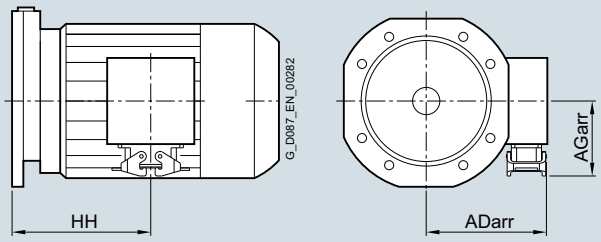

Fig. 2

Relevant figure						Fig. 1			Fig. 2		
Motor	Gearbox type					HAN 10E motor plug with one bracket			HAN 10E motor plug with two brackets		
	D/Z	FD/FZ	B	K	C	HH	ADarr	AGarr	HH	ADarr	AGarr
LA63	19	-	19	-	-	61.5	132	92.0	61.5	127.0	89.5
	39	29, 39	29, 39	39	29, 39	95.0			95.0		
	49 ... 69	49, 69	49	49 ... 79	49.69	85.5			85.5		
LA71 **LA71Z**	19	-	19	-	-	93.5	142.0	92.0	93.5	127.0	89.5
	29, 39	29, 39	29, 39	39	29, 39	135.0			135.0		
	49 ... 69	49, 69	49	49 ... 79	49, 69	125.5			125.5		
	79	79	-	89	89	123.5			123.5		
LE80	19	-	19	-	-	120.0	155.0	106.0	120.0	139.5	103.5
	29, 39	29, 39	29, 39	39	29, 39	170.0			170.0		
	49 ... 69	49, 69	49	49 ... 79	49, 69	160.5			160.5		
	79	79	-	89	89	154.5			154.5		
	89	89	-	109	-	141.5			141.5		
LE80Z	19	-	19	-	-	155.0	155.0	106.0	155.0	139.5	103.5
	29, 39	29, 39	29, 39	39	29, 39	205.0			205.0		
	49 ... 69	49, 69	49	49 ... 79	49, 69	195.5			195.5		
	79	79	-	89	89	189.5			189.5		
	89	89	-	109	-	176.5			176.5		
LE90	29, 39	29, 39	29, 39	39	29, 39	207.5	160.0	106.0	207.5	144.5	103.5
	49 ... 69	49, 69	49	49 ... 79	49, 69	198.0			198.0		
	79	79	-	89	89	192.0			192.0		
	89	89	-	109	-	179.0			179.0		
	109	109	-	129	-	172.0			172.0		
	129	129	-	149	-	165.0			165.0		
LE90Z	29, 39	29, 39	29, 39	39	29, 39	247.5	160.0	106.0	247.5	144.5	103.5
	49 ... 69	49, 69	49	49 ... 79	49, 69	238.0			238.0		
	79	79	-	89	89	232.0			232.0		
	89	89	-	109	-	219.0			219.0		
	109	109	-	129	-	212.0			212.0		
	129	129	-	149	-	205.0			205.0		
LE100	29, 39	29, 39	29, 39	39	29, 39	242.5	179.5	115.5	242.5	164.0	113.0
	49 ... 69	49, 69	49	49 ... 79	49, 69	233.0			233.0		
	79	79	-	89	89	227.0			227.0		
	89	89	-	109	-	210.0			210.0		
	109	109	-	129	-	201.0			201.0		
	129	129	-	149	-	192.0			192.0		
	149	149	-	169	-	190.5			190.5		
LE100Z	29, 39	29, 39	29, 39	39	29, 39	277.5	179.5	115.5	277.5	164.0	113.0
	49 ... 69	49, 69	49	49 ... 79	49, 69	268.0			268.0		
	79	79	-	89	89	262.0			262.0		
	89	89	-	109	-	245.0			245.0		
	109	109	-	129	-	236.0			236.0		
	129	129	-	149	-	227.0			227.0		
	149	149	-	169	-	225.5			225.5		

© Siemens AG 2017

Overview (continued)

Further information about the motor plug can be found in
chapter "Motor options" on page 11/16.

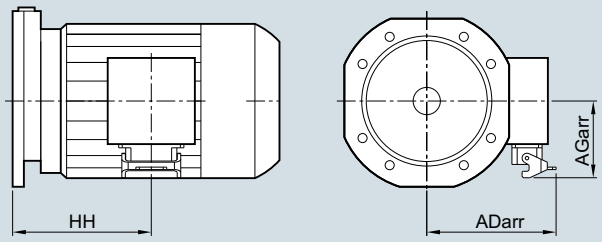

Fig. 1

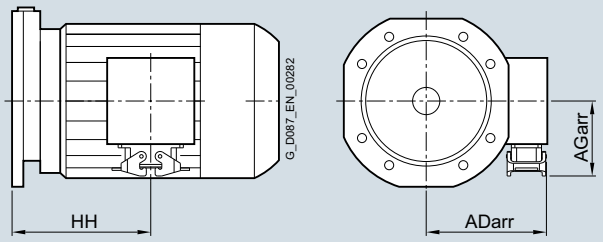

Fig. 2

Relevant figure						**Fig. 1**			**Fig. 2**		
Motor	**Gearbox type**					**HAN 10E motor plug with one bracket**			**HAN 10E motor plug with two brackets**		
	D/Z	FD/FZ	B	K	C	HH	ADarr	AGarr	HH	ADarr	AGarr
LE112	29, 39	29, 39	29, 39	39	29, 39	244.0	190.5	115.5	244.0	175.0	113.0
	49 ... 69	49, 69	49	49 ... 79	49, 69	234.5			234.5		
	79	79	-	89	89	228.5			228.5		
	89	89	-	109	-	211.5			211.5		
	109	109	-	129	-	202.5			202.5		
	129	129	-	149	-	193.5			193.5		
	149	149	-	169	-	192.0			192.0		
	169, 189	169, 189	-	189	-	179.5			179.5		
LE112Z	29, 39	29, 39	29, 39	39	29, 39	269.0	190.5	115.5	269.0	1175.0	113.0
	49 ... 69	49, 69	49	49 ... 79	49, 69	234.5			234.5		
	79	79	-	89	89	253.5			253.5		
	89	89	-	109	-	236.5			236.5		
	-	-	-	129	-	227.5			227.5		
	129	129	-	149	-	218.5			218.5		
	149	149	-	169	-	217.0			217.0		
	169, 189	169, 189	-	189	-	204.5			204.5		
LE132	49 ... 69	49, 69	49	49 ... 79	49, 69	266.0	209.5	138.0	266.0	223.0	135.5
	79	79	-	89	89	260.0			260.0		
	89	89	-	109	-	243.0			243.0		
	109	109	-	129	-	234.0			234.0		
	129	129	-	149	-	223.0			223.0		
	149	149	-	169	-	216.5			216.5		
	169, 189	169, 189	-	189	-	203.5			203.5		
LE132Z	49 ... 69	49, 69	49	49 ... 79	49, 69	316.0	209.5	138.0	316.0	223.0	135.5
	79	79	-	89	89	310.0			310.0		
	89	89	-	109	-	293.0			293.0		
	109	109	-	129	-	284.0			284.0		
	129	129	-	149	-	273.0			273.0		
	149	149	-	169	-	266.5			266.5		
	169, 189	169, 189	-	189	-	253.5			253.5		

© Siemens AG 2017

K4/4 motor plug

Overview

Further information about the motor plug can be found in
chapter "Motor options" on page 11/17.

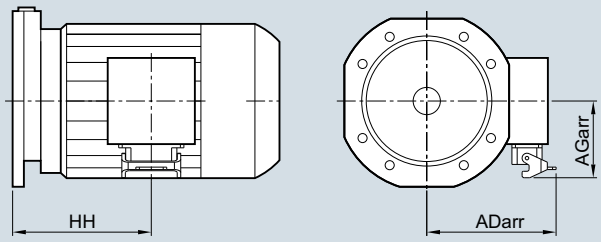

Fig. 1

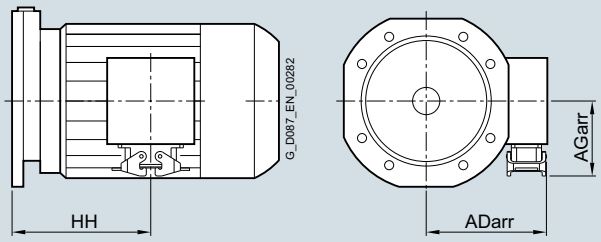

Fig. 2

Relevant figure						Fig. 1			Fig. 2		
Motor	**Gearbox type**					**K4/4 motor plug with one bracket**			**K4/4 motor plug with two brackets**		
	D/Z	FD/FZ	B	K	C	HH	ADarr	AGarr	HH	ADarr	AGarr
LE112	29, 39	29, 39	29, 39	39	29, 39	244.0	190.5	115.5	244.0	175.0	113.0
	49 ... 69	49, 69	49	49 ... 79	49, 69	234.5			234.5		
	79	79	-	89	89	228.5			228.5		
	89	89	-	109	-	211.5			211.5		
	109	109	-	129	-	202.5			202.5		
	129	129	-	149	-	193.5			193.5		
	149	149	-	169	-	192.0			192.0		
	169, 189	169, 189	-	189	-	179.5			179.5		
LE112Z	29, 39	29, 39	29, 39	39	29, 39	269.0	190.5	115.5	269.0	1175.0	113.0
	49 ... 69	49, 69	49	49 ... 79	49, 69	234.5			234.5		
	79	79	-	89	89	253.5			253.5		
	89	89	-	109	-	236.5			236.5		
	-	-	-	129	-	227.5			227.5		
	129	129	-	149	-	218.5			218.5		
	149	149	-	169	-	217.0			217.0		
	169, 189	169, 189	-	189	-	204.5			204.5		
LE132	49 ... 69	49, 69	49	49 ... 79	49, 69	266.0	209.5	138.0	266.0	223.0	135.5
	79	79	-	89	89	260.0			260.0		
	89	89	-	109	-	243.0			243.0		
	109	109	-	129	-	234.0			234.0		
	129	129	-	149	-	223.0			223.0		
	149	149	-	169	-	216.5			216.5		
	169, 189	169, 189	-	189	-	203.5			203.5		
LE132Z	49 ... 69	49, 69	49	49 ... 79	49, 69	316.0	209.5	138.0	316.0	223.0	135.5
	79	79	-	89	89	310.0			310.0		
	89	89	-	109	-	293.0			293.0		
	109	109	-	129	-	284.0			284.0		
	129	129	-	149	-	273.0			273.0		
	149	149	-	169	-	266.5			266.5		
	169, 189	169, 189	-	189	-	253.5			253.5		
LE160	49 ... 69	49, 69	49	49 ... 79	49, 69	299.5	138.5	138.0	299.5	123.0	135.5
	79	79	-	89	89	293.5			293.5		
	89	89	-	109	-	276.5			276.5		
	109	109	-	129	-	267.5			267.5		
	129	129	-	149	-	256.5			256.5		
	149	149	-	169	-	250.0			250.0		
	169, 189	169, 189	-	189	-	237.0			237.0		
LE160Z	49 ... 69	49, 69	49	49 ... 79	49, 69	359.5	138.5	138.0	359.5	123.0	135.5
	79	79	-	89	89	353.5			353.5		
	89	89	-	109	-	336.5			336.5		
	109	109	-	129	-	327.5			327.5		
	129	129	-	149	-	316.5			316.5		
	149	149	-	169	-	310.0			310.0		
	169, 189	169, 189	-	189	-	297.0			297.0		

© Siemens AG 2017

Overview (continued)

Further information about the motor plug can be found in
chapter "Motor options" on page 11/17.

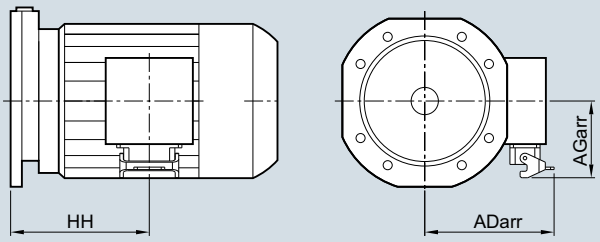

Fig. 1

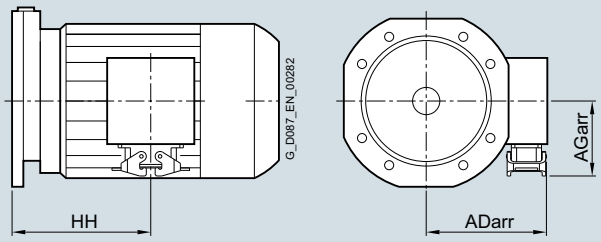

Fig. 2

Relevant figure						**Fig. 1**			**Fig. 2**		
Motor	**Gearbox type**					**K4/4 motor plug with one bracket**			**K4/4 motor plug with two brackets**		
	D/Z	FD/FZ	B	K	C	HH	ADarr	AGarr	HH	ADarr	AGarr
LES180	89	89	-	109	-	336.0	278.5	201.0	336.0	263.0	198.5
	109	109	-	129	-	327.0			327.0		
	129	129	-	149	-	316.0			316.0		
	149	149	-	169	-	309.5			309.5		
	169, 189	169, 189	-	189	-	296.0			296.0		
LES180Z	89	89	-	109	-	366.0	278.5	201.0	366.0	263.0	198.5
	-	-	-	129	-	357.0			357.0		
	129	129	-	149	-	346.0			346.0		
	149	149	-	169	-	339.5			339.5		
	169, 189	169, 189	-	189	-	326.0			326.0		
LES200	109	109	-	129	-	391.5	302.5	201.0	391.5	287.0	198.5
	129	129	-	149	-	380.5			380.5		
	149	149	-	169	-	374.0			374.0		
	169, 189	169, 189	-	189	-	360.5			360.5		
LES200Z	109	109	-	129	-	300.0	302.5	201.0	300.0	287.0	198.5
	129	129	-	149	-	350.0			350.0		
	149	149	-	169	-	405.0			405.0		
	169, 189	169, 189	-	189	-	466.0			466.0		

© Siemens AG 2017

HAN Q8 and HAN Q12 motor plugs

Overview

Further information about the motor plug can be found in
chapter "Motor options" on page 11/19 to page 11/23.

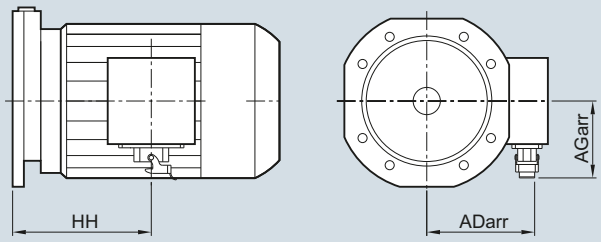

Fig. 1

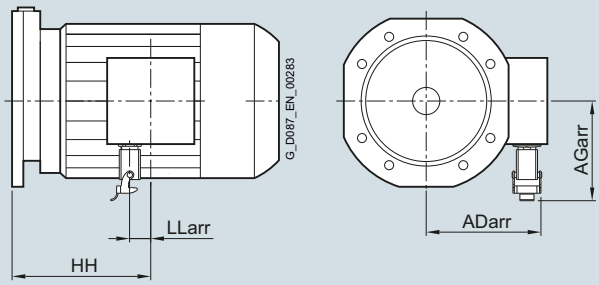

Fig. 2

Relevant figure						Fig. 1			Fig. 2			
Motor	Gearbox type					HAN Q8 motor plug			HAN Q12 motor plug			
	D/Z	FD/FZ	B	K	C	HH	ADarr	AGarr	HH	ADarr	AGarr	LLarr
LA63	19	-	19	-	-	61.5	110.0	87.5	61.5	104.0	109.0	18
	39	29, 39	29, 39	39	29, 39	95.0			95.0			
	49 ... 69	49, 69	49	49 ... 79	49.69	85.5			85.5			
LA71 **LA71Z**	19	-	19	-	-	93.5	120.0	87.5	93.5	114.0	109.0	
	29, 39	29, 39	29, 39	39	29, 39	135.0			135.0			
	49 ... 69	49, 69	49	49 ... 79	49, 69	125.5			125.5			
	79	79	-	89	89	123.5			123.5			
LE80	19	-	19	-	-	120.0	134.0	107.0	120.0	128.0	122.0	
	29, 39	29, 39	29, 39	39	29, 39	170.0			170.0			
	49 ... 69	49, 69	49	49 ... 79	49, 69	160.5			160.5			
	79	79	-	89	89	154.5			154.5			
	89	89	-	109	-	141.5			141.5			
LE80Z	19	-	19	-	-	155.0	134.0	107.0	155.0	233.0	122.0	
	29, 39	29, 39	29, 39	39	29, 39	205.0			205.0			
	49 ... 69	49, 69	49	49 ... 79	49, 69	195.5			195.5			
	79	79	-	89	89	189.5			189.5			
	89	89	-	109	-	176.5			176.5			
LE90	29, 39	29, 39	29, 39	39	29, 39	207.5	139.0	107.0	207.5	133.0	122.0	
	49 ... 69	49, 69	49	49 ... 79	49, 69	198.0			198.0			
	79	79	-	89	89	192.0			192.0			
	89	89	-	109	-	179.0			179.0			
	109	109	-	129	-	172.0			172.0			
	129	129	-	149	-	165.0			165.0			
LE90Z	29, 39	29, 39	29, 39	39	29, 39	247.5	139.0	107.0	247.5	152.5	122.0	
	49 ... 69	49, 69	49	49 ... 79	49, 69	238.0			238.0			
	79	79	-	89	89	232.0			232.0			
	89	89	-	109	-	219.0			219.0			
	109	109	-	129	-	212.0			212.0			
	129	129	-	149	-	205.0			205.0			
LE100	29, 39	29, 39	29, 39	39	29, 39	242.5	158.5	116.5	-	-	-	-
	49 ... 69	49, 69	49	49 ... 79	49, 69	233.0						
	79	79	-	89	89	227.0						
	89	89	-	109	-	210.0						
	109	109	-	129	-	201.0						
	129	129	-	149	-	192.0						
	149	149	-	169	-	190.5						
LE100Z	29, 39	29, 39	29, 39	39	29, 39	277.5	158.5	116.5	-	-	-	-
	49 ... 69	49, 69	49	49 ... 79	49, 69	268.0						
	79	79	-	89	89	262.0						
	89	89	-	109	-	245.0						
	109	109	-	129	-	236.0						
	129	129	-	149	-	227.0						
	149	149	-	169	-	225.5						

© Siemens AG 2017

Overview (continued)

Further information about the motor plug can be found in
chapter "Motor options" on page 11/19 to page 11/23.

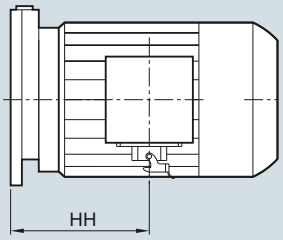

Fig. 1

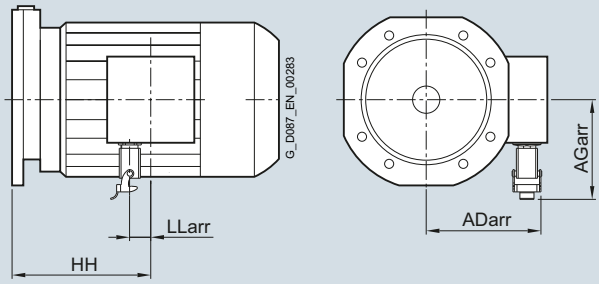

Fig. 2

Relevant figure						Fig. 1			Fig. 2			
Motor	**Gearbox type**					**HAN Q8 motor plug**			**HAN Q12 motor plug**			
	D/Z	FD/FZ	B	K	C	HH	ADarr	AGarr	HH	ADarr	AGarr	LLarr
LE112	29, 39	29, 39	29, 39	39	29, 39	244.0	169.5	116.5	-	-	-	-
	49 ... 69	49, 69	49	49 ... 79	49, 69	234.5						
	79	79	-	89	89	228.5						
	89	89	-	109	-	211.5						
	109	109	-	129	-	202.5						
	129	129	-	149	-	193.5						
	149	149	-	169	-	192.0						
	169, 189	169, 189	-	189	-	179.5						
LE112Z	29, 39	29, 39	29, 39	39	29, 39	269.0	169.5	116.5	-	-	-	-
	49 ... 69	49, 69	49	49 ... 79	49, 69	234.5						
	79	79	-	89	89	253.5						
	89	89	-	109	-	236.5						
	-	-	-	129	-	227.5						
	129	129	-	149	-	218.5						
	149	149	-	169	-	217.0						
	169, 189	169, 189	-	189	-	204.5						
LE132	49 ... 69	49, 69	49	49 ... 79	49, 69	266.0	188.5	130.0	-	-	-	-
	79	79	-	89	89	260.0						
	89	89	-	109	-	243.0						
	109	109	-	129	-	234.0						
	129	129	-	149	-	223.0						
	149	149	-	169	-	216.5						
	169, 189	169, 189	-	189	-	203.5						
LE132Z	49 ... 69	49, 69	49	49 ... 79	49, 69	316.0	188.5	130.0	-	-	-	-
	79	79	-	89	89	310.0						
	89	89	-	109	-	293.0						
	109	109	-	129	-	284.0						
	129	129	-	149	-	273.0						
	149	149	-	169	-	266.5						
	169, 189	169, 189	-	189	-	253.5						

© Siemens AG 2017

Notes

© Siemens AG 2017

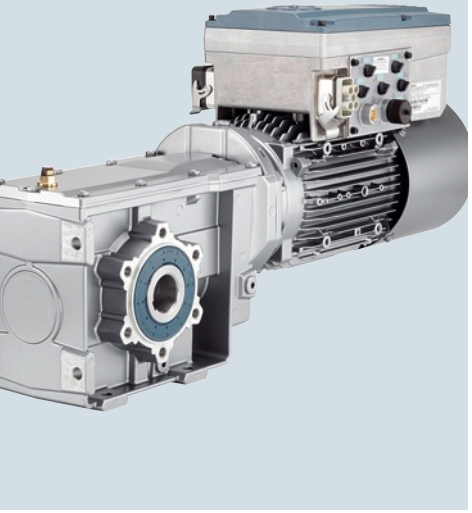

9/2 Introduction
9/2 Type designation SINAMICS G110M (integrated in the motor in SIMOGEAR)
9/3 Selection and ordering data
9/4 Application
9/4 More information

9/5 SINAMICS G110M motor integrated frequency inverter
9/5 Overview
9/6 Benefits
9/6 Design
9/8 Technical specifications

9/9 CU240M Control Units
9/9 Overview
9/10 Design
9/11 Integration
9/15 Technical specifications

9/17 PM240M Power Modules
9/17 Overview
9/18 Integration
9/19 Technical specifications
9/22 Characteristic curves

9/23 Line-side components
9/23 Repair switch
9/23 Fuses and circuit breakers

9/24 DC link components
9/24 Braking resistors
9/24 Overview
9/24 Technical specifications
9/24 Characteristic curve
9/25 24 V DC power supply
9/25 Overview
9/25 Technical specifications

9/26 Available motor/inverter combinations
9/26 Overview

9/27 Supplementary system components – Accessories
9/27 Intelligent Operator Panel IOP Handheld
9/28 Memory cards
9/28 PC inverter connection kit 2 (mini USB interface cable for communication with a PC)
9/28 Installation kits
9/28 STARTER commissioning tool
9/28 SINAMICS Startdrive commissioning tool
9/29 Connecting cables for the Control Unit
9/29 PROFINET connecting cable
9/29 PROFIBUS connecting cable
9/29 AS-Interface connecting cable
9/30 Connecting cables/connectors for supplying the Control Unit with power
9/30 Connecting cables and connectors for digital inputs and outputs
9/30 Connecting cables and connectors for analog inputs
9/30 Connecting cables to the power supply
9/30 Connecting cables pre-assembled at one end and connector sets to connect to the line supply
9/30 Connector insert for power loop-through
9/31 Power bus distribution 400 V in IP65 degree of protection
9/31 More information

9/31 Spare parts
9/31 Spare Parts Kit
9/31 Overview
9/31 Selection and ordering data

9/32 Dimensions
9/32 Motors with SINAMICS G110M

© Siemens AG 2017

Type designation SINAMICS G110M (integrated in the motor in SIMOGEAR) [1)]

Motor frame size		
	71	**A**
	80, 90	**B**
	100, 112	**C**

Power Module		
	0.37 kW	**0037**
	0.75 kW	**0075**
	1.1 kW	**0110**
	1.5 kW	**0150**
	2.2 kW	**0220**
	3.0 kW	**0300**
	4.0 kW	**0400**

Control Unit		
	Connection (line voltage and 24 V DC)	
	Terminal strip, cable entry via cable gland	**A**
	HAN Q4/2 + connector 7/8"	**B**

	Bus system	
	USS	**1**
	AS-Interface	**2**
	PROFIBUS	**3**
	PROFINET	**4**

Motor connection		
	Star	**S**
	Delta	**D**

Braking resistor		
	Without	**0**
	Internal (FSA)	**1**
	Internal (FSB)	**2**

Externally mounted components		
	Without	**0**
	24 V DC power supply	**1**
	Repair switch	**2**

Example:

G110M	**-**	**B**	**0110**	**-**	**A**	**1**	**S**	**-**	**0**	**0**
		⬇ (1)	⬇ (2)		⬇ (3)	⬇ (4)	⬇ (5)		⬇ (6)	⬇ (7)

(1) Motor frame size
(2) Power Module rated power
(3) Control Unit: Connection (line voltage and 24 V DC)
(4) Control Unit: Bus system
(5) Motor connection
(6) Braking resistor
(7) Externally mounted components

[1)] SINAMICS G110M can also be ordered as individual components. The components are supplied in separate packages. Installation must be performed by the customer.
For further details, see Catalog D 31 · 2015

© Siemens AG 2017

Selection and ordering data [1)]

Motor frame size	Power Module power kW	Motor connection	Type designation	Order code
71	0.37	Star	**G110M - A0037 - ■ ■ S - ■ ■**	**U01**
	0.75	Delta	**G110M - A0075 - ■ ■ D - ■ ■**	**U02**
80	0.75	Star	**G110M - B0075 - ■ ■ S - ■ ■**	**U07**
	1.1	Delta	**G110M - B0110 - ■ ■ D - ■ ■**	**U08**
		Star	**G110M - B0110 - ■ ■ S - ■ ■**	**U09**
	1.5	Delta	**G110M - B0150 - ■ ■ D - ■ ■**	**U10**
90	1.1	Star	**G110M - B0110 - ■ ■ S - ■ ■**	**U09**
	1.5	Star	**G110M - B0150 - ■ ■ S - ■ ■**	**U11**
	2.2	Delta	**G110M - B0220 - ■ ■ D - ■ ■**	**U12**
		Star	**G110M - B0220 - ■ ■ S - ■ ■**	**U13**
	3.0	Delta	**G110M - B0300 - ■ ■ D - ■ ■**	**U14**
100	2.2	Star	**G110M - C0220 - ■ ■ S - ■ ■**	**U19**
	3.0	Star	**G110M - C0300 - ■ ■ S - ■ ■**	**U21**
	4.0	Delta	**G110M - C0400 - ■ ■ D - ■ ■**	**U22**
		Star	**G110M - C0400 - ■ ■ S - ■ ■**	**U23**
112	4.0	Star	**G110M - C0400 - ■ ■ S - ■ ■**	**U23**

Type designation supplement and additional order code

Control Unit	**Connection (400 V 3 AC/24 V DC)**	**Bus system**					
	Cable gland *)	USS/Modbus RTU	**A**	**1**			**U40**
		AS-Interface	**A**	**2**			**U41**
		PROFIBUS DP (DP)	**A**	**3**			**U42**
		PROFINET/ EtherNet IP (PN)	**A**	**4**			**U43**
	HAN Q4/2 + connector 7/8"	AS-Interface	**B**	**2**			**U51**
		PROFIBUS DP (DP)	**B**	**3**			**U52**
		PROFINET/ EtherNet IP (PN)	**B**	**4**			**U53**
Braking resistor	Without				**0**		**-**
	Internal (FSA)				**1**		**U60**
	Internal (FSB)				**2**		**U61**
Externally mounted components	Without					**0**	**-**
	24 V DC power supply					**1**	**U70**
	Repair switch					**2**	**U71**

*) On delivery, the openings in the housing for 24 V DC line voltage and brake are sealed with a dummy screw cap (exception: on brake motors, the brake cable is already connected via a cable gland).
Cable glands are available optionally as an installation kit, see page 9/28.

1) SINAMICS G110M can also be ordered as individual components.
The components are supplied in separate packages. Installation must be performed by the customer.
For further details, see Catalog D 31 · 2015

© Siemens AG 2017

Application

Use	Requirements for torque accuracy/speed accuracy/position accuracy/coordination of axes/functionality					
	Continuous motion			Non-continuous motion		
	Basic	Medium	High	Basic	Medium	High
	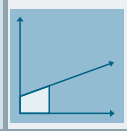	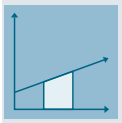	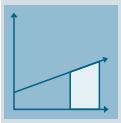	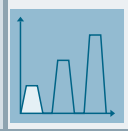	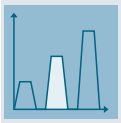	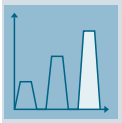
Pumping, ventilating, compressing	Centrifugal pumps Radial/axial fans Compressors	Centrifugal pumps Radial/axial fans Compressors	Eccentric screw pumps	Hydraulic pumps Metering pumps	Hydraulic pumps Metering pumps	Descaling pumps Hydraulic pumps
	V20 G110 G120C G120P	G120P G130/G150 G180 [1]	S120	G120	S110	S120
Moving 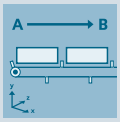	Conveyor belts Roller conveyors Chain conveyors	Conveyor belts Roller conveyors Chain conveyors Lifting/lowering devices Elevators Escalators/moving walkways Indoor cranes Marine drives Cable railways	Elevators Container cranes Mining hoists Excavators for open-cast mining Test bays	Acceleration conveyors Storage and retrieval machines	Acceleration conveyors Storage and retrieval machines Cross cutters Reel changers	Storage and retrieval machines Robotics Pick & place Rotary indexing tables Cross cutters Roll feeds Engagers/ disengagers
	V20 G110 G110D **G110M** G120C	G120 G120D G130/G150 G180 [1]	S120 S150 DCM	G120 G120D	S110 DCM	S120 DCM
Processing 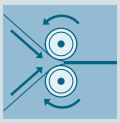	Mills Mixers Kneaders Crushers Agitators Centrifuges	Mills Mixers Kneaders Crushers Agitators Centrifuges Extruders Rotary furnaces	Extruders Winders and unwinders Lead/follower drives Calenders Main press drives Printing machines	Tubular bagging machines Single-axis motion control such as • Position profile • Path profile	Tubular bagging machines Single-axis motion control such as • Position profile • Path profile	Servo presses Rolling mill drives Multi-axis motion control such as • Multi-axis positioning • Cams • Interpolations
	V20 G120C	G120 G130/G150 G180 [1]	S120 S150 DCM	G120	S110	S120 DCM
Machining 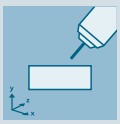	Main drives for • Turning • Milling • Drilling	Main drives for • Drilling • Sawing	Main drives for • Turning • Milling • Drilling • Gear cutting • Grinding	Axle drives for • Turning • Milling • Drilling	Axle drives for • Drilling • Sawing	Axle drives for • Turning • Milling • Drilling • Lasering • Gear cutting • Grinding • Nibbling and punching
	S110	S110 S120	S120	S110	S110 S120	S120

SINAMICS G110M fulfills all requirements that plant manufacturers demand from their frequency inverters in drives for conveyor system applications. It is available integrated in the motor up to IP66 degree of protection [2] and sets standards in efficiency – from the installation phase through commissioning as far as handling. SINAMICS G110M is also suitable for pump and fan applications in which a motor integrated inverter is required as a distributed system.

Practical application examples and descriptions are available on the Internet at

www.siemens.com/sinamics-applications
www.siemens.com/conveyor-technology

More information

You may also be interested in these frequency inverters:
- Simple applications with AS-Interface in IP65 degree of protection ⇒ SINAMICS G110D
- More performance for the control cabinet in IP20 degree of protection ⇒ SINAMICS G120, SINAMICS G120C
- With enhanced functionality, with positioning function in IP65 degree of protection ⇒ SINAMICS G120D
- With positioning function in the control cabinet in IP20 degree of protection ⇒ SINAMICS G120

[1] Industry-specific inverters.

[2] Geared motors are available to IP55 / IP65 degree of protection.

© Siemens AG 2017

Overview

The SINAMICS G110M motor integrated frequency inverters are the solution for drive tasks in which a motor integrated frequency inverter is required. With different device versions (frame sizes FSA and FSB) in a power range from 0.37 kW to 4 kW, the SINAMICS G110M is suitable for a wide variety of drive solutions. SINAMICS G110M supports continuous speed control of three-phase asynchronous motors and fulfills all the requirements of conveyor system applications from simple speed control through to demanding sensorless vector control. It can be integrated seamlessly into the system thanks to its compact design in IP65/IP66 degree of protection.

Through the integrated functions such as quick stop and the limit switch function, the SINAMICS G110M is particularly suited for conveyor system applications.

For applications that require safety engineering, the SINAMICS G110M has the integrated STO (Safe Torque Off [1]) function, which can be implemented without further external components.

Integration via PROFIBUS, PROFINET, AS-Interface or USS into a higher-level SIMATIC controller is very easy thanks to complete TIA Portal integration[1] – one tool and one operating and data storage concept.

Observe the configuring information when making your selection.



Fig. 9/1 SINAMICS G110M Control Unit CU240M PN, cable gland and Power Module PM240M FSA 1.5 kW



Fig. 9/2 SINAMICS G110M Control Unit CU240M PN, plug-in and Power Module PM240M FSA 1.5 kW

Reasons for using distributed drive systems

- Modular drive solutions – thus standardized mechatronic elements that can be individually tested
- No need for a cabinet, resulting in a smaller space requirement and less cooling
- Long cables between the inverter and motor can be avoided (which means lower power losses, reduced interference emission and lower costs for shielded cables and additional filters)
- Considerable benefits for conveyor systems with their extensive coverage (e.g. in the automotive and logistics industries)

Siemens family of distributed drives

Siemens offers an innovative portfolio of frequency inverters to optimally implement distributed drive solutions. The strengths of the individual members of the drive family permit simple adaptation to the widest range of application demands:

- Identical connection systems
- Standard commissioning and configuration tools

Products from the family of distributed drives:

- **SINAMICS G110M** inverters
- SINAMICS G110D inverters
- SINAMICS G120D inverters
- SIMATIC ET200pro FC-2 frequency converters
- SIRIUS M200D motor starters

Modularity

SINAMICS G110M is a modular, motor integrated inverter system with IP65/66 degree of protection comprising various function units. The main units are:

- Control Unit (CU)
- Power Module (PM)

The Control Unit controls and monitors the Power Module and the connected motor using several different closed-loop control types that can be selected. The digital and analog inputs and digital outputs on the device support the simple wiring of sensors and actuators directly at the drive. The input signals can either be directly linked within the Control Unit and initiate local responses independently or they can be transferred to the central control via PROFIBUS, PROFINET or AS-Interface for further processing within the context of the overall plant.

The Power Module supplies the motor in a power range from 0.37 kW to 4 kW. The Power Module is controlled by a microprocessor in the Control Unit. State-of-the-art IGBT technology with pulse width modulation is used for highly reliable and flexible motor operation. Comprehensive protection functions provide a high degree of protection for the Power Module and the motor.

The latest technical documentation (catalogs, dimension drawings, certificates, manuals and operating instructions) is available on the Internet at the following address:

www.siemens.com/sinamics-g110m

and offline on the DVD-ROM CA 01 in the Drive Technology Configurator (DT Configurator). In addition, the DT Configurator can be used on the Internet without requiring any installation. The DT Configurator can be found in the Siemens Industry Mall at the following address:

www.siemens.com/dt-configurator

[1] Available for firmware version V4.7 or higher.

© Siemens AG 2017

Overview (continued)

Safety Integrated

The distributed SINAMICS G110M inverters are already equipped with the integrated STO safety function (Safe Torque Off [1]), certified in accordance with IEC 61508 SIL 2 as well as ISO 13849-1 Category 3 and PL d). It can be activated either over PROFIsafe or over the safety input.

Benefits

Fast commissioning

- Preconfigured with SIMOGEAR
- Loop-through of 24 V DC and 400 V 3 AC and communication – no T-distributor necessary
- Internal braking resistors – typical applications can be implemented without external braking resistors
- Rugged, with IP65/66 degree of protection, up to 55° C ambient temperature
- Commissioning via fieldbus

Fast commissioning on site

- Local commissioning via DIP switch, standard USB interface and potentiometer or Intelligent Operator Panel (IOP)
- Plug-in connections for 400 V 3 AC and 24 V DC, plug-in I/Os and communication
- Local diagnostics with LEDs
- Uploading, saving and cloning of parameters with SINAMICS SD card and IOP Intelligent Operator Panel

Full functionality

- Integrated safety functions (STO locally via F-DI or via PROFIsafe)
- PROFINET communication to PROFIBUS at no extra cost
- Integrated communication: USS, Modbus RTU, PROFIBUS, PROFINET, EtherNet/IP and AS-Interface
- Basic PLC functions and additional conveyor technology functions
- I/O can be used as distributed I/O of the PLC

Efficient engineering

- Fully integrated in Totally Integrated Automation, Totally Integrated Automation Portal and Integrated Drive System
- Automatic diagnostics in combination with SIMATIC controller

Flexible commissioning

- Integrated, specific software functionality for conveyor systems:
  - Quick stop function for fast reaction times to sensors
  - Limit switch functionality, e.g. for rotary table, corner transfer unit
- Use of the same software tools (STARTER and SINAMICS Startdrive) as for all SINAMICS drives

Design

The SINAMICS G110M distributed inverters are modular frequency inverters for standard drives. Every SINAMICS G110M consists of two operative units: a Power Module and a Control Unit.



Fig. 9/3 SINAMICS G110M Control Unit CU240M PN Plug-in and Power Module PM240M FSA 1.5 kW

Power Modules

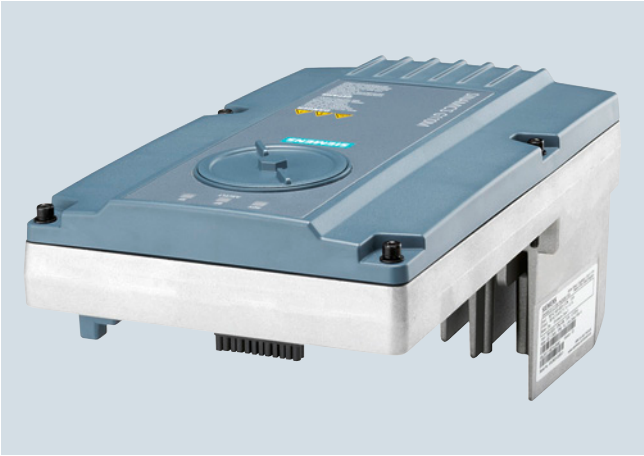

Fig. 9/4 SINAMICS G110M Power Module PM240M FSA 1.5 kW

The following PM240M Power Modules are available for the SINAMICS G110M distributed inverters:

PM240M Power Modules Rated power	Frame size
0.37 kW	FSA
0.75 kW	FSA
1.1 kW	FSA
1.5 kW	FSA
2.2 kW	FSB
3 kW	FSB
4 kW	FSB

[1] Available for firmware version V4.7 or higher.

© Siemens AG 2017

Design (continued)

Control Units

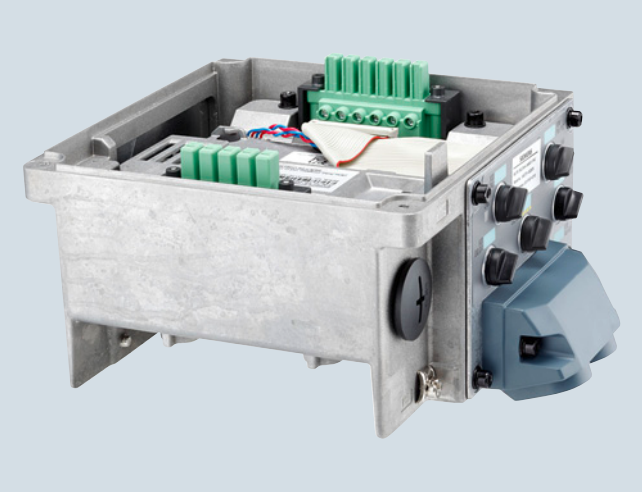

Fig. 9/5 SINAMICS G110M Control Unit CU240M PN Cable gland

A Control Unit performs closed-loop control functions for the inverter. In addition to closed-loop control, it has additional functions that can be adapted to the particular application through parameterization.

Various Control Units are available for SINAMICS G110M distributed inverters, see page 9/9.

Supplementary system components

Intelligent Operator Panel IOP Handheld

The IOP supports both entry-level personnel and drive experts. Thanks to the large plain text display, menu-based operation and the application wizards, it is easy to commission, diagnose and locally control standard drives.

Memory card

The parameter settings for an inverter can be stored on the SINAMICS SD card. When service is required, e.g. after the inverter has been replaced and the data has been downloaded from the memory card, the system is immediately ready for use again.

PC inverter connection kit (mini USB interface cable) for communication with a PC

For controlling and commissioning an inverter directly from a PC if the appropriate software (STARTER commissioning tool V4.3 and higher or SINAMICS Startdrive V13 and higher) has been installed.

Internal braking resistors

Excess energy in the DC link is dissipated in the internal braking resistor.

24 V DC power supply *)

A 24 V DC power supply is also available for SINAMICS G110M. This is mounted directly on the inverter and supplies the device with 24 V DC, so there is no need to connect an external 24 V DC power supply.

Repair switch

A repair switch is available for SINAMICS G110M inverters. This is installed directly on the inverter and disconnects the input end of the SINAMICS G110M from the 400 V line voltage.

Connecting cable for the Control Units

Flexible plug-in cables to transfer data between the Industrial Ethernet stations or PROFIBUS stations, as well as to supply power to the Control Unit (24 V DC).

Connector sets and pre-assembled cables can be ordered as accessories as well as pre-assembled cables for the line supply.

Installation kits

Different installation kits can be ordered as accessories for the Control Units with plug-in connections and Control Units with cable gland connections.

These contain caps or cable glands for protection or electrical connection respectively.

Spare Parts Kit

A Spare Parts Kit is available which comprises small parts such as seals, caps and screws.

*) The 24 V DC power supply is not compatible with AS-Interface.

© Siemens AG 2017

Technical specifications

Unless explicitly specified otherwise, the following technical specifications are valid for all the following SINAMICS G110M distributed inverter components listed here.

SINAMICS G110M	
Mechanical specifications	
Vibratory load	
• Transport acc. to EN 60721-3-2 [1]	Class 1M2
• Operation acc. to EN 60721-3-3	Class 3M3
Shock load	
• Transport acc. to EN 60721-3-2 [1]	Class 1M2
• Operation acc. to EN 60721-3-3	Class 3M3
Ambient conditions	
Protection class acc. to EN 61800-5-1	Class III (PELV)
Touch protection acc. to EN 61800-5-1	Class I (with protective conductor system)
Permissible ambient and coolant temperature (air) during operation for Power Modules	-10 ... +40 °C (14 ... 104 °F) without derating >40 ... 55 °C (104 ... 131 °F) see derating characteristics
Permissible ambient and coolant temperature (air) during operation for Control Units	-10 ... +55 °C (14 ... 131 °F) without derating
Humidity, max.	95 % at 40 °C (104 °F)
Ambient temperature	
• Storage [1] acc. to EN 60068-2-1	-40 ... +70 °C (-40 ... +158 °F)
• Transport [1] acc. to EN 60068-2-1	-40 ... +70 °C (-40 ... +158 °F)
• Operation acc. to EN 60068-2-2	-10 ... +40 °C (14 ... 104 °F) without derating
Environmental class/harmful chemical substances	
• Operation acc. to EN 60721-3-3	Class 3C2
Degree of pollution acc. to EN 61800-5-1	2
Certification for fail-safe versions	
• According to IEC 61508	SIL 2
• According to ISO 13849-1	PL d and Category 3
Standards	
Compliance with standards	UL, cUL, CE, C-Tick (RCM)
CE marking, according to	Low-Voltage Directive 2006/95/EC
EMC Directive [2]	
• Frame sizes FSA to FSB with integrated line filter class A	Category C2 [3] according to EN 61800-3 Note: The EMC product standard EN 61800-3 does not apply directly to a frequency inverter, but to a PDS (Power Drive System), which comprises the complete circuitry, motor and cables in addition to the inverter. The frequency inverters on their own do not generally require identification according to the EMC Directive.

[1] In product packaging.
[2] For further information, see Catalog D 31 · 2015
[3] With shielded motor cable up to 5 m.

© Siemens AG 2017

Overview

The Control Unit performs closed-loop control functions for the inverter. In addition to the primary closed-loop control function, it has many additional functions that can be adapted to the particular application through parameterization.

The Control Units are available in two versions for connection to 400 V 3 AC and 24 V DC – screw-type or plug-in. The version in USS fieldbus communication is only available as screw-type. The differences between the screw-type and plug-in versions are presented in the following pictures:

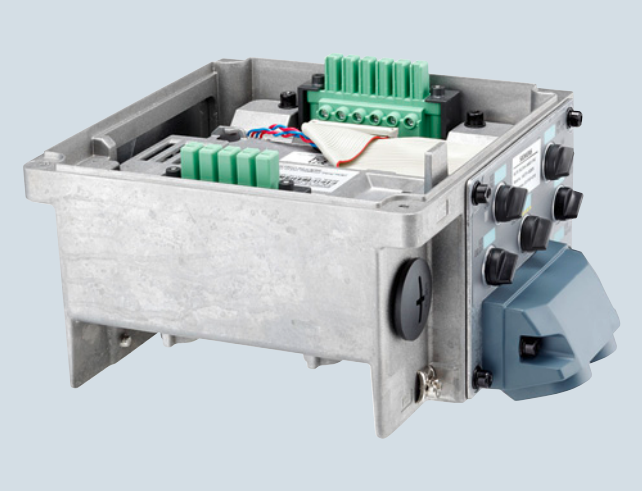

Fig. 9/6 SINAMICS G110M Control Unit CU240M PN
Cable gland

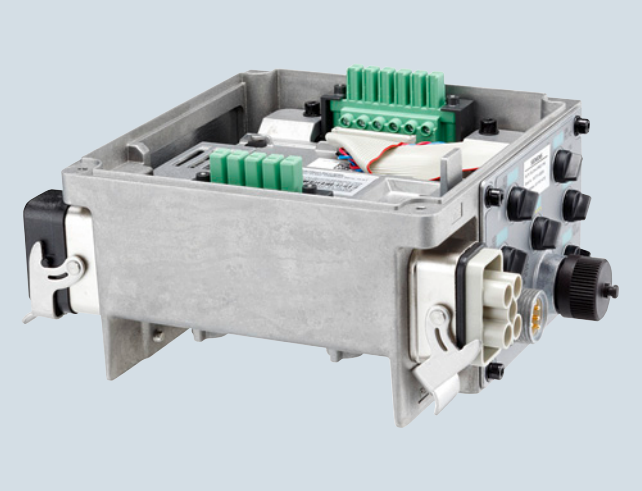

Fig. 9/7 SINAMICS G110M Control Unit CU240M PN
Plug-in

Each Control Unit is available in 4 different versions (for motor frame size 71, 80/90, 100/112) for mounting directly on the respective motor terminal box base.

Control Unit		Communication via	Connection system	For motor frame sizes
Control Unit CU240M, screw-type	CU240M	USS, Modbus RTU	Screw-type	71, 80/90, 100/112
Control Unit CU240M AS-i, screw-type	CU240M AS-i	AS-Interface	Screw-type	71, 80/90, 100/112
Control Unit CU240M AS-i, plug-in	CU240M AS-i	AS-Interface	Plug-in	71, 80/90, 100/112
Control Unit CU240M DP, screw-type	CU240M DP	PROFIBUS	Screw-type	71, 80/90, 100/112
Control Unit CU240M DP, plug-in	CU240M DP	PROFIBUS	Plug-in	71, 80/90, 100/112
Control Unit CU240M PN, screw-type	CU240M PN	PROFINET, EtherNet/IP	Screw-type	71, 80/90, 100/112
Control Unit CU240M PN, plug-in	CU240M PN	PROFINET, EtherNet/IP	Plug-in	71, 80/90, 100/112

Safety Integrated functions

The safety function "Safe Torque Off" (STO[1)]) (certified according to IEC 61508 SIL 2 and ISO 13849-1 PL d and Category 3) is already integrated into the basic versions of the CU240M series (CU240M, CU240M DP and CU240M PN). It prevents active movement of the drive. It can be activated either over PROFIsafe or over the safety input.

Existing systems in particular can be simply updated with safety technology without the need to change the motor or mechanical system.

1) Available for firmware version V4.7 or higher.

© Siemens AG 2017

Design

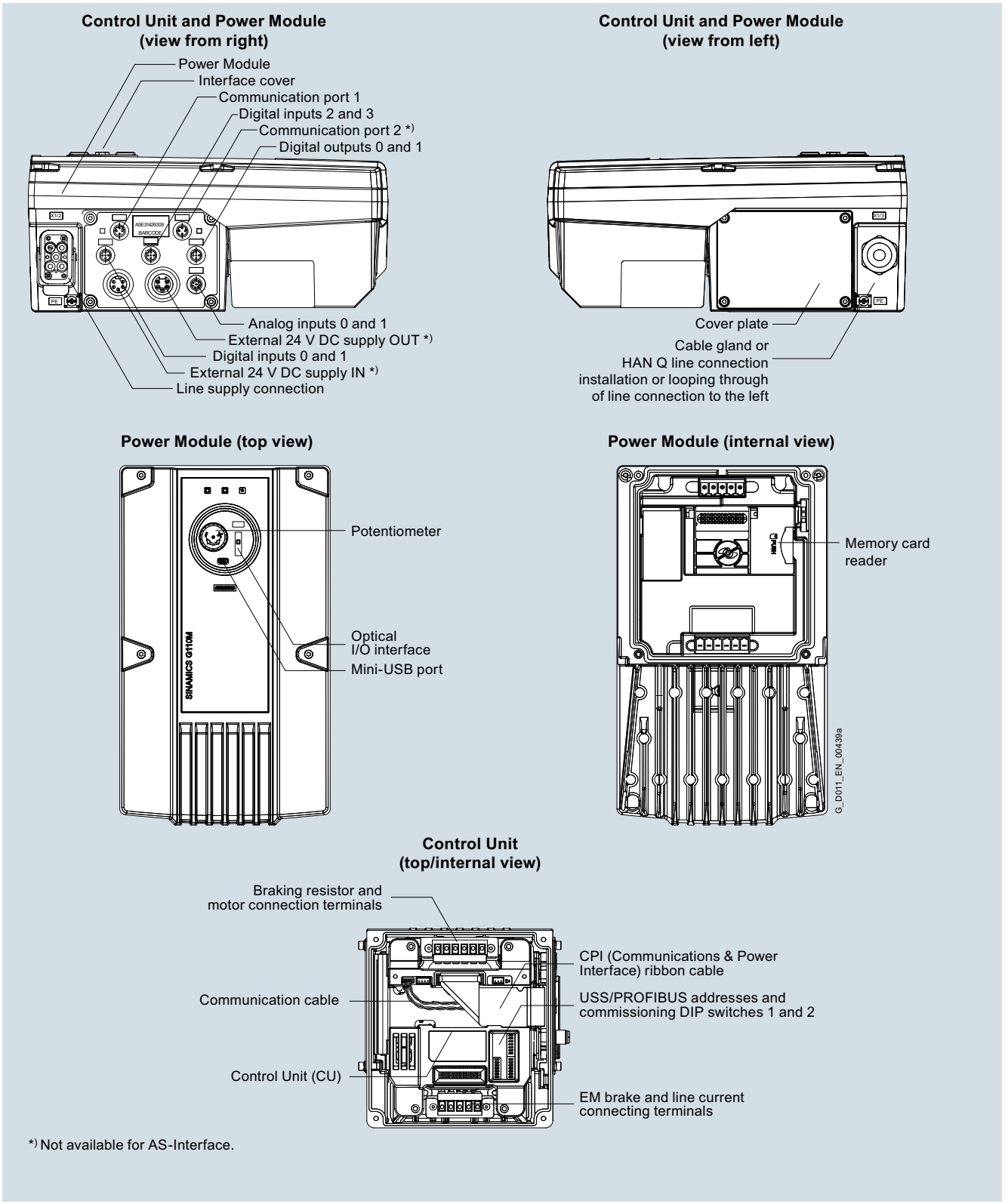

Fig. 9/8 Design of the Control Unit and Power Module

© Siemens AG 2017

Integration

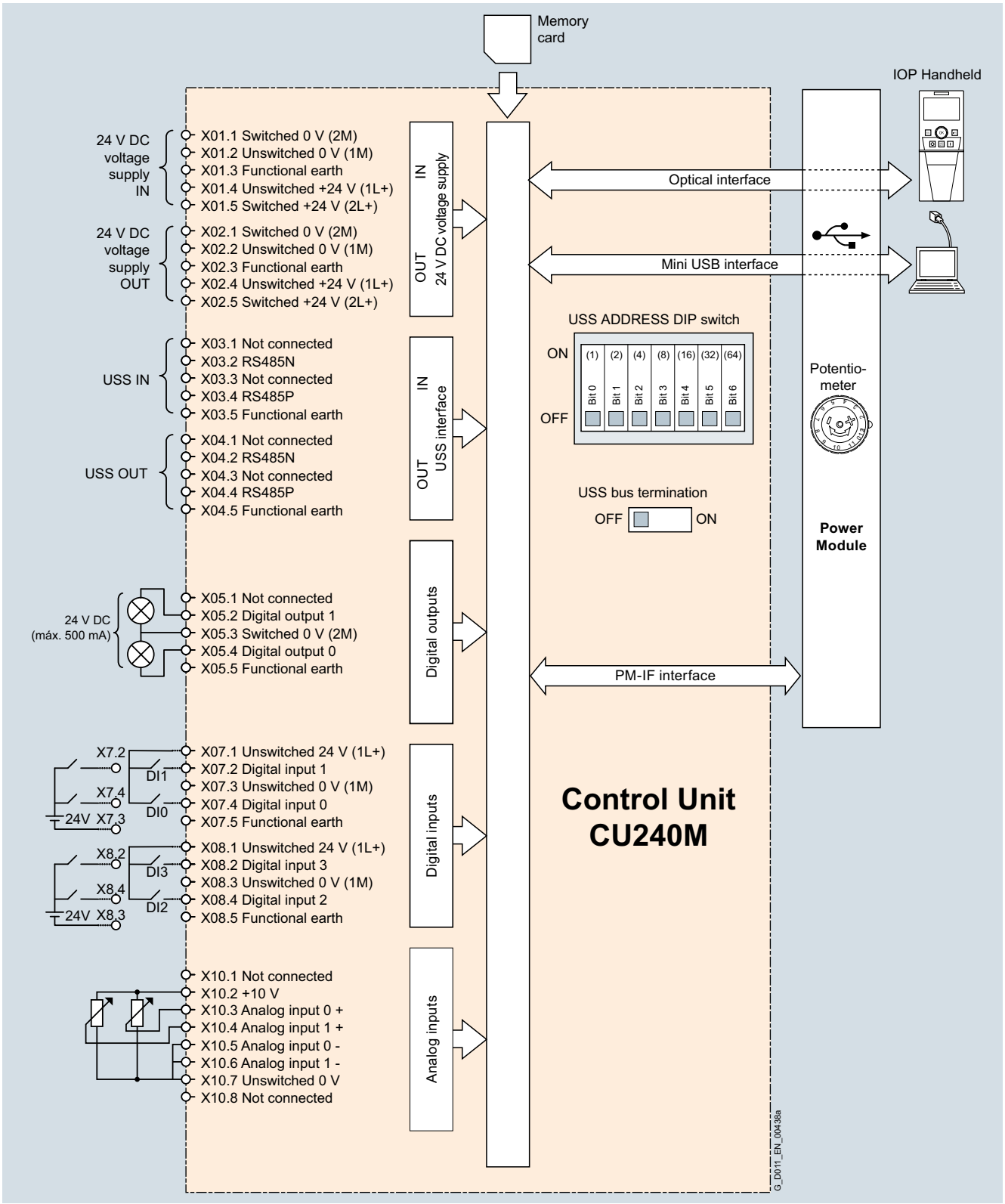

Fig. 9/9 Connection diagram for CU240M Control Units

© Siemens AG 2017

Integration (continued)

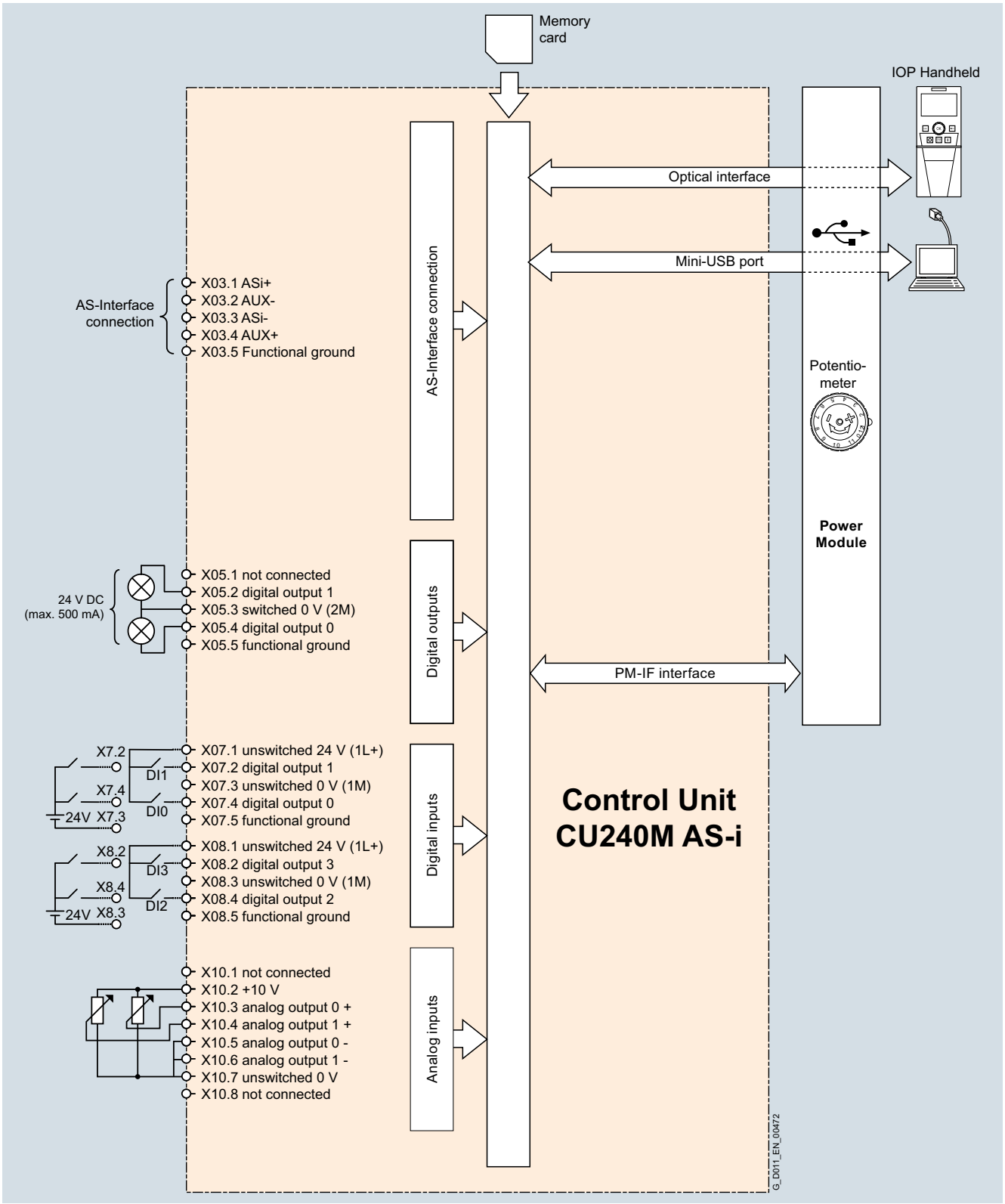

Fig. 9/10 Connection diagram for CU240M AS-i Control Units

© Siemens AG 2017

Integration (continued)

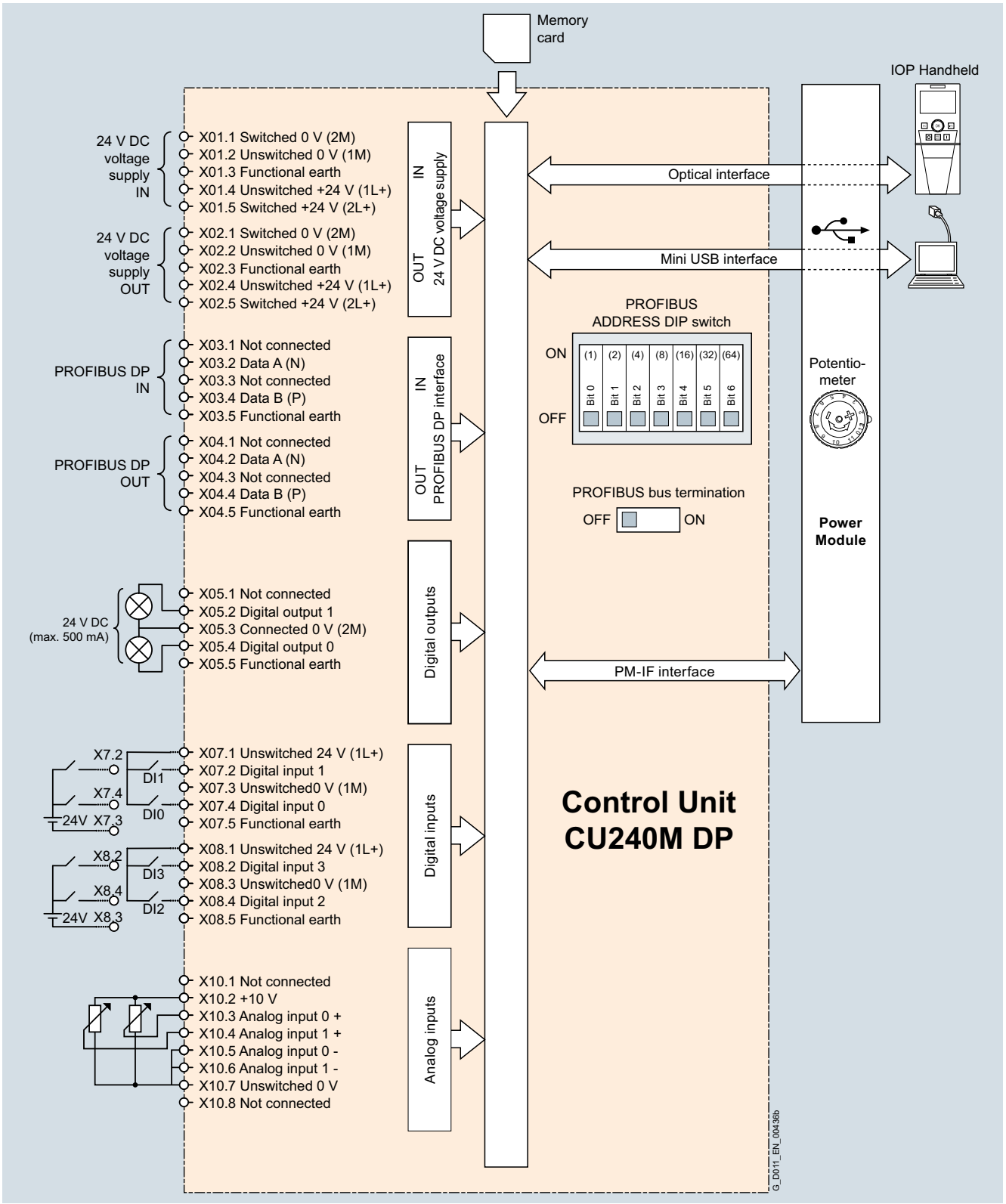

Fig. 9/11 Connection diagram for CU240M DP Control Units

© Siemens AG 2017

Integration (continued)

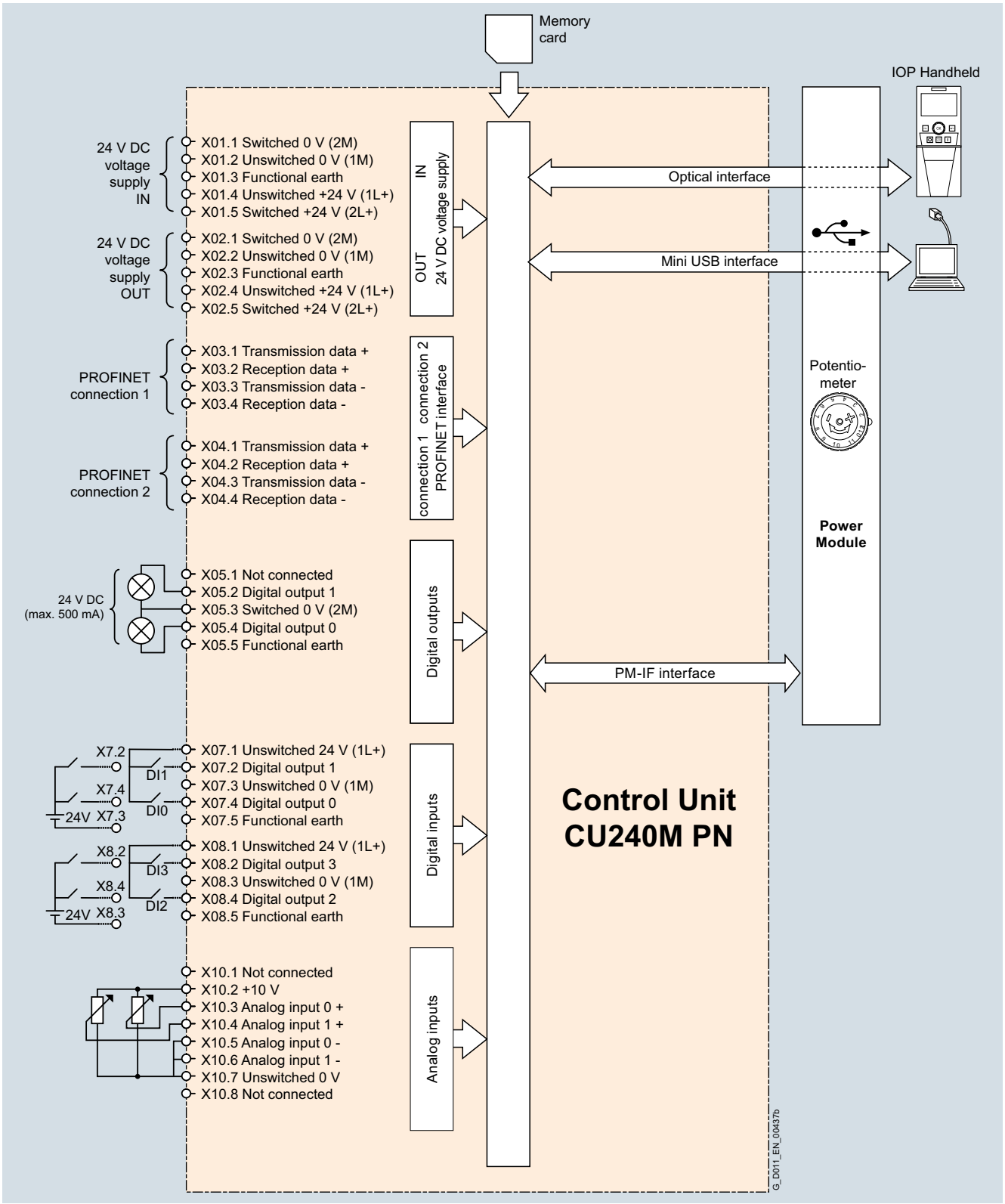

Fig. 9/12 Connection diagram for CU240M PN Control Units

© Siemens AG 2017

Technical specifications

Control Unit	**CU240M USS** With screw-type connections	**CU240M AS-i** With screw-type connections	**CU240M AS-i** With plug-in connections	**CU240M PROFIBUS** With screw-type connections	**CU240M PROFIBUS** With plug-in connections	**CU240M PROFINET** With screw-type connections	**CU240M PROFINET** With plug-in connections
Electrical specifications							
Operating voltage	External 24 V DC ± 15 % power supply with protective extra low voltage PELV acc. to EN 61800-5-1 must be used.	External 24 V DC ± 15 % power supply with protective extra low voltage PELV acc. to EN 61800-5-1 must be used.	External 24 V DC ± 15 % power supply with protective extra low voltage PELV acc. to EN 61800-5-1 must be used.	External 24 V DC ± 15 % power supply with protective extra low voltage PELV acc. to EN 61800-5-1 must be used.	External 24 V DC ± 15 % power supply with protective extra low voltage PELV acc. to EN 61800-5-1 must be used.	External 24 V DC ± 15 % power supply with protective extra low voltage PELV acc. to EN 61800-5-1 must be used.	External 24 V DC ± 15 % power supply with protective extra low voltage PELV acc. to EN 61800-5-1 must be used.
Current consumption [1] (from the 24 V DC supply)							
• With Power Module frame sizes FSA	235 mA	290 mA	290 mA	235 mA	235 mA	290 mA	290 mA
• With Power Module frame sizes FSB	235 mA	290 mA	290 mA	235 mA	235 mA	290 mA	290 mA
Interfaces							
Digital inputs (non-isolated)	4 programmable, PNP, SIMATIC compatible	4 programmable, PNP, SIMATIC compatible	4 programmable, PNP, SIMATIC compatible	4 programmable, PNP, SIMATIC compatible	4 programmable, PNP, SIMATIC compatible	4 programmable, PNP, SIMATIC compatible	4 programmable, PNP, SIMATIC compatible
• Optionally parameterizable as safe inputs	1	1	1	1	1	1	1
Analog inputs (0 ... 10 V or 0 ... 20 mA with 12-bit resolution)	2	2	2	2	2	2	2
Digital outputs (24 V DC, 0 ... 0.5 A)	2, programmable	2, programmable	2, programmable	2, programmable	2, programmable	2, programmable	2, programmable
Bus interface	USS	AS-Interface	AS-Interface	PROFIBUS DP	PROFIBUS DP	PROFINET	PROFINET
• Fieldbus protocols	USS Modbus RTU	AS-Interface	AS-Interface	PROFIBUS DP incl. PROFIsafe	PROFIBUS DP incl. PROFIsafe	PROFINET incl. PROFIsafe EtherNet/IP	PROFINET incl. PROFIsafe EtherNet/IP
• Profiles	–	3.0	3.0	PROFIdrive	PROFIdrive	PROFIdrive PROFIenergy	PROFIdrive PROFIenergy
PTC/KTY interface (connection via Power Module)	✓	✓	✓	✓	✓	✓	✓
• Motor temperature sensor	1 input, sensors that can be connected: PTC, KTY or bimetal	1 input, sensors that can be connected: PTC, KTY or bimetal	1 input, sensors that can be connected: PTC, KTY or bimetal	1 input, sensors that can be connected: PTC, KTY or bimetal	1 input, sensors that can be connected: PTC, KTY or bimetal	1 input, sensors that can be connected: PTC, KTY or bimetal	1 input, sensors that can be connected: PTC, KTY or bimetal
Control of a mechanical motor brake (connection via the Control Unit)	✓	✓	✓	✓	✓	✓	✓
Slot for SINAMICS memory card (SD card)	✓	✓	✓	✓	✓	✓	✓
Commissioning interface (mini USB)	✓	✓	✓	✓	✓	✓	✓
Safety functions							
Integrated safety functions [2] acc. to IEC 61508 SIL 2 and EN 13849-1 Category 3 and PL d	Safe Torque Off (STO)	Safe Torque Off (STO)	Safe Torque Off (STO)	Safe Torque Off (STO)	Safe Torque Off (STO)	Safe Torque Off (STO)	Safe Torque Off (STO)
Open-loop/closed-loop control techniques							
***V/f* linear/square/ parameterizable**	✓	✓	✓	✓	✓	✓	✓
V/f with flux current control (FCC)	✓	✓	✓	✓	✓	✓	✓
Vector control, sensorless	✓	✓	✓	✓	✓	✓	✓
Torque control, sensorless	✓	✓	✓	✓	✓	✓	✓

[1] The current consumption of connected sensors (total, max. 200 mA) as well as the current drawn from the digital outputs (total, max. 500 mA) might need to be added.

[2] Available for firmware version V4.7 or higher.

© Siemens AG 2017

Technical specifications

Control Unit	CU240M USS With screw-type connections	CU240M AS-i With screw-type connections	CU240M AS-i With plug-in connections	CU240M PROFIBUS With screw-type connections	CU240M PROFIBUS With plug-in connections	CU240M PROFINET With screw-type connections	CU240M PROFINET With plug-in connections
Software functions							
Fixed frequencies	✓	✓	✓	✓	✓	✓	✓
Signal interconnection with BICO technology	✓	✓	✓	✓	✓	✓	✓
Automatic restart after line supply failure or operational fault	✓	✓	✓	✓	✓	✓	✓
Slip compensation	✓	✓	✓	✓	✓	✓	✓
Free function blocks (FFB) for logical and arithmetic operations	✓	✓	✓	✓	✓	✓	✓
Ramp smoothing	✓	✓	✓	✓	✓	✓	✓
Selectable drive data sets	✓(4)	✓(4)	✓(4)	✓(4)	✓(4)	✓(4)	✓(4)
Selectable command data sets (CDS) (manual/auto)	✓(4)	✓(4)	✓(4)	✓(4)	✓(4)	✓(4)	✓(4)
Flying restart	✓	✓	✓	✓	✓	✓	✓
JOG	✓	✓	✓	✓	✓	✓	✓
Cyclic recording of ramp-up and ramp-down	✓	✓	✓	✓	✓	✓	✓
Technology controller (PID)	✓	✓	✓	✓	✓	✓	✓
Quick stop	✓	✓	✓	✓	✓	✓	✓
Limit switch logic	✓	✓	✓	✓	✓	✓	✓
Thermal motor protection	✓	✓	✓	✓	✓	✓	✓
Thermal inverter protection	✓	✓	✓	✓	✓	✓	✓
Setpoint input	✓	✓	✓	✓	✓	✓	✓
Motor identification	✓	✓	✓	✓	✓	✓	✓
Motor holding brake	✓	✓	✓	✓	✓	✓	✓
Mechanical specifications and ambient conditions							
Degree of protection	IP66/UL Type 3	IP66/UL Type 3	IP65/UL Type 3	IP66/UL Type 3	IP65/UL Type 3	IP66/UL Type 3	IP65/UL Type 3
Operating temperature	-10 ... +55 °C (14 ... 131 °F)	-10 ... +55 °C (14 ... 131 °F)	-10 ... +55 °C (14 ... 131 °F)	-10 ... +55 °C (14 ... 131 °F)	-10 ... +55 °C (14 ... 131 °F)	-10 ... +55 °C (14 ... 131 °F)	-10 ... +55 °C (14 ... 131 °F)
Air temperature	-40 ... +70 °C (40 ... 158 °F)	-40 ... +70 °C (40 ... 158 °F)	-40 ... +70 °C (40 ... 158 °F)	-40 ... +70 °C (40 ... 158 °F)	-40 ... +70 °C (40 ... 158 °F)	-40 ... +70 °C (40 ... 158 °F)	-40 ... +70 °C (40 ... 158 °F)
Relative humidity	<95 % RH, condensation not permissible	<95 % RH, condensation not permissible	<95 % RH, condensation not permissible	<95 % RH, condensation not permissible	<95 % RH, condensation not permissible	<95 % RH, condensation not permissible	<95 % RH, condensation not permissible
Dimensions							
• Width	205 mm	205 mm	205 mm	205 mm	205 mm	205 mm	205 mm
• Height	105 mm	105 mm	105 mm	105 mm	105 mm	105 mm	105 mm
• Depth	171 mm	171 mm	171 mm	171 mm	171 mm	171 mm	171 mm
Weight, approx.	1.75 kg	1.85 kg	1.85 kg	1.85 kg	1.85 kg	1.85 kg	1.85 kg

© Siemens AG 2017

Overview

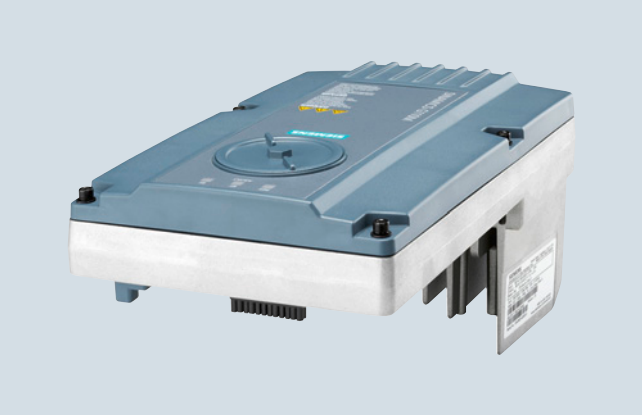

Fig. 9/13 SINAMICS G110M Power Module PM240M FSA (0.37 to 1.5 kW)

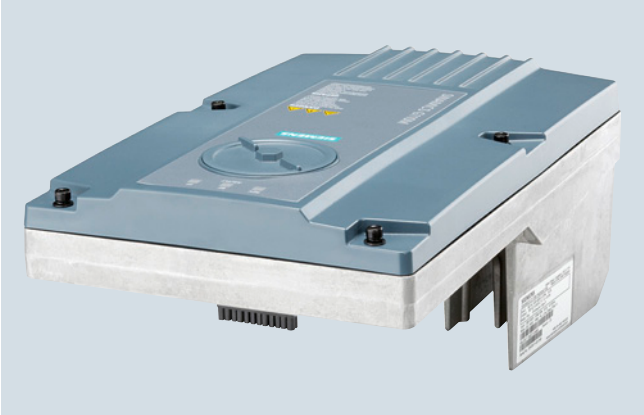

Fig. 9/14 SINAMICS G110M Power Module PM240M FSB (2.2 to 4 kW)

The PM240M Power Modules are suitable for safety-related applications. In conjunction with the CU240M Control Unit, the drive can be transformed into a Safety Integrated drive (see Control Units).

The PM240M Power Modules with integrated line filter class A are suitable for connection to TN and TT supply systems.

© Siemens AG 2017

Integration

PM240M Power Modules feature the following interfaces as standard:

- PM-IF interface for connection of the PM240M Power Module and Control Unit.
- Motor connection including control of the motor brake and temperature sensor
- Line connection via cable gland or HAN Q4/2 (connector)
- Line supply loop-through via cable gland/terminal or HAN Q4/2 (socket)
- USB connection for connection of a PC
- Analog potentiometer for setting a speed
- SD card slot for the use of memory cards

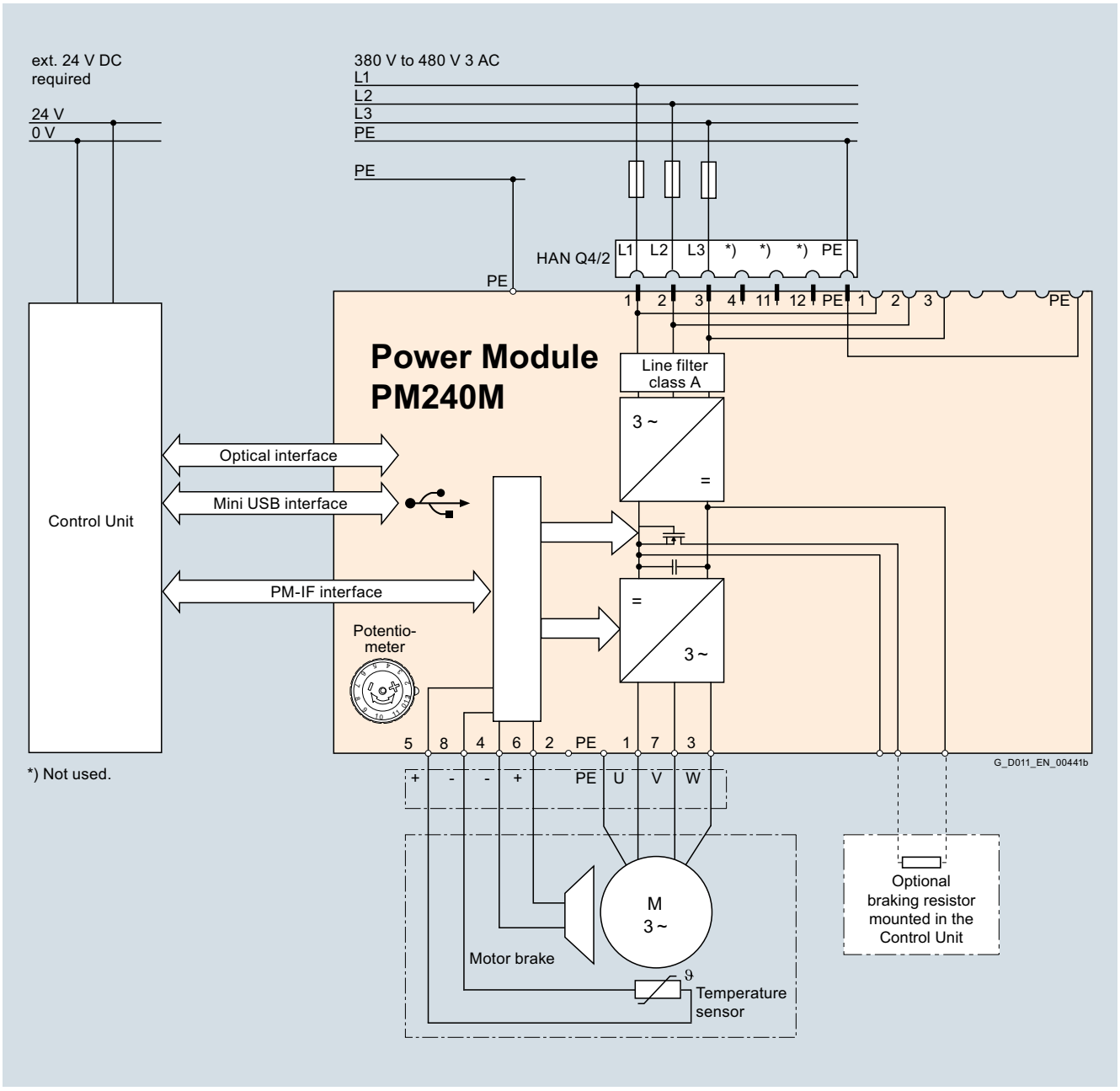

Fig. 9/15 Connection diagram for PM240M Power Module with integrated line filter class A

© Siemens AG 2017

Technical specifications

General technical specifications

	PM240M Power Modules
System operating voltage	380 V (-10 %) ... 480 V (+10 %) 3 AC
Line supply requirements **Short-circuit power ratio R_{SC}**	> 100
Input frequency	47 ... 63 Hz
Output frequency	
• Control type V/f	0 ... 550 Hz
• Control type Vector	0 ... 200 Hz
Pulse frequency	4 kHz (standard); 4 ... 16 kHz (in steps of 2 kHz), see derating data
Power factor	0.95
Inverter efficiency	95 ... 97 %
Output voltage, max. as % of input voltage	87 %
Overload capability	
• High overload (HO)	0.37 ... 3 kW: 2 x rated output current for 3 s, followed by 1.5 × rated output current for 57 s, over a cycle time of 300 s (110 % on average) 4 kW: 1.6 x rated output current for 3 s, followed by 1.5 × rated output current for 57 s, over a cycle time of 300 s (110 % on average)
Electromagnetic compatibility	Integrated line filter class A according to EN 55011
Possible braking methods	Dynamic braking with internal braking resistors (accessories) Dynamic braking with external braking resistors R_{min} = 200 Ω (for FSA), R_{min} = 60 Ω (for FSB) DC brake Integrated brake control supplies DC power supply for the brake

Line input voltage	380 V AC	400 V AC	440 V AC	480 V AC	400 V AC
Resulting brake voltage	171 V DC	180 V DC	198 V DC	216 V DC	225 V DC

Disconnection on the DC side permits "fast" braking (max. output current 1 A)
Degree of protection	IP66 (for Control Unit with screw-type connections) IP65 (for Control Unit with plug-in connections)
Operating temperature	-10 ... +55 °C (14 ... +131 °F)
Storage temperature	-40 ... +70 °C (-40 ... +158 °F)
Permissible mounting positions	All
Relative humidity	< 95 % RH, condensation not permissible
Cooling	External cooling with motor fan
Installation altitude	Up to 1000 m above sea level without derating Over 1000 m, see derating data
Short-Circuit Current Rating SCCR [1]	40 kA
Protection functions	• Undervoltage • Phase failure detection • Overvoltage • Overload • Ground fault • Short-circuit • Stall protection • Motor blocking protection • Motor overtemperature • Inverter overtemperature • Parameter locking
Compliance with standards	CE (UL, cUL, C-Tick)
CE marking, according to	EC Low-Voltage Directive 73/23/EEC; filtered variants also: EC Low Voltage Directive 89/336/EEC

[1] Applies to industrial control cabinet installations to NEC Article 409/UL 508A.

© Siemens AG 2017

Technical specifications (continued)

System operating voltage 380 V ... 480 V 3 AC		PM240M Power Modules			
Rated output current I_{rated} [1]	A	1.3	2.2	3.1	4.1
Maximum output current I_{max}	A	2.6	4.4	6.2	8.2
Rated power	kW	0.37	0.75	1.1	1.5
Rated pulse frequency	kHz	4	4	4	4
Efficiency η	%	96.8	98.1	98.2	97.3
Power loss [2] at rated output current	kW	0.025	0.032	0.041	0.052
Cooling air requirement	m^3/s	0.0048	0.0048	0.0048	0.0048
Sound pressure level L_{pA} (1 m)	dB	–	–	–	–
Rated input current [3]	A	1.3	2	2.8	3.6
Line supply connection U1/L1, V1/L2, W1/L3, PE					
• Conductor cross-section, recommended	mm^2	1 ... 2.5 18 ... 14 AWG	1 ... 2.5 18 ... 14 AWG	1 ... 2.5 18 ... 14 AWG	1 ... 2.5 18 ... 14 AWG
PE connection (external connection)					
• Conductor cross-section (recommended)	mm^2	10	10	10	10
Motor connection U2, V2, W2, PE, motor brake, temperature sensor					
• Conductor cross-section	mm^2	1 ... 2.5 18 ... 14 AWG	1 ... 2.5 18 ... 14 AWG	1 ... 2.5 18 ... 14 AWG	1 ... 2.5 18 ... 14 AWG
Motor cable length, max. Shielded	m	–	–	–	–
Degree of protection		IP66	IP66	IP66	IP66
Dimensions					
• Width	mm	161	161	161	161
• Height	mm	135	135	135	135
• Depth	mm	270	270	270	270
Frame size		FSA	FSA	FSA	FSA
Weight, approx.	kg	2.1	2.1	2.1	2.1

[1] The rated output current I_{rated} is based on the duty cycle for high overload (HO).

[2] Typical values. Additional information can be found on the Internet at https://support.automation.siemens.com/WW/view/en/94059311

[3] The input current depends on the motor load and line impedance. The input currents apply for load at rated power for a line impedance corresponding to u_K = 1 %.

© Siemens AG 2017

Technical specifications (continued)

System operating voltage 380 V ... 480 V 3 AC		PM240M Power Modules		
Rated output current I_{rated} [1]	A	5.6	7.3	8.8
Maximum output current I_{max}	A	11.2	14.6	14.1
Rated power	kW	2.2	3	4
Rated pulse frequency	kHz	4	4	4
Efficiency η	%	97.6	97.6	97.7
Power loss [2] at rated output current	kW	0.078	0.103	0.126
Cooling air requirement	m^3/s	0.024	0.024	0.024
Sound pressure level L_{pA} (1 m)	dB	–	–	–
Rated input current [3]	A	5.3	6.9	8
Line supply connection U1/L1, V1/L2, W1/L3, PE				
• Conductor cross-section, recommended	mm^2	1 ... 2.5 18 ... 14 AWG	1 ... 2.5 18 ... 14 AWG	1 ... 2.5 18 ... 14 AWG
PE connection (external connection)				
• Conductor cross-section (recommended)	mm^2	10	10	10
Motor connection U2, V2, W2, PE, motor brake, temperature sensor				
• Conductor cross-section	mm^2	1 ... 2.5 18 ... 14 AWG	1 ... 2.5 18 ... 14 AWG	1 ... 2.5 18 ... 14 AWG
Motor cable length, max. Shielded	m	–	–	–
Degree of protection		IP66	IP66	IP66
Dimensions				
• Width	mm	181	181	181
• Height	mm	135	135	135
• Depth	mm	309	309	309
Frame size		FSB	FSB	FSB
Weight, approx.	kg	3.4	3.4	3.4

1) The rated output current I_{rated} is based on the duty cycle for high overload (HO).

2) Typical values. Additional information can be found on the Internet at https://support.industry.siemens.com/cs/document/94059311.

3) The input current depends on the motor load and line impedance. The input currents apply for load at rated power for a line impedance corresponding to u_K = 1 %.

© Siemens AG 2017

Characteristic curves

Derating data

Rated power at 400 V 3 AC		**Rated output current in A** for a pulse frequency of (derating as a function of the pulse frequency)						
kW	hp	4 kHz	6 kHz	8 kHz	10 kHz	12 kHz	14 kHz	16 kHz
0.37	0.5	1.3	1.3	1.11	0.91	0.78	0.65	0.59
0.75	1.0	2.2	1.9	1.5	1.3	1.1	1.0	0.9
1.1	1.5	3.1	2.6	2.2	1.9	1.6	1.4	1.2
1.5	2.0	4.1	3.5	2.9	2.5	2.1	1.8	1.6
2.2	3.0	5.6	4.8	3.9	3.4	2.8	2.5	2.2
3.0	4.0	7.3	6.2	5.1	4.4	3.7	3.3	2.9
4.0	5.0	8.8	7.5	6.2	5.3	4.4	4.0	3.5

Ambient temperature

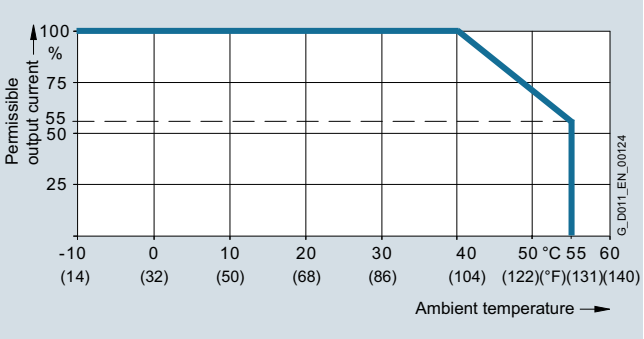

Fig. 9/16 Permissible output current as a function of ambient temperature for PM240M Power Modules, frame sizes FSA and FSB

Note:

The ambient temperature of the Control Units and the SIMOGEAR geared motors must be taken into account. The temperature ranges are specified in the technical specifications under Control Units.

Installation altitude

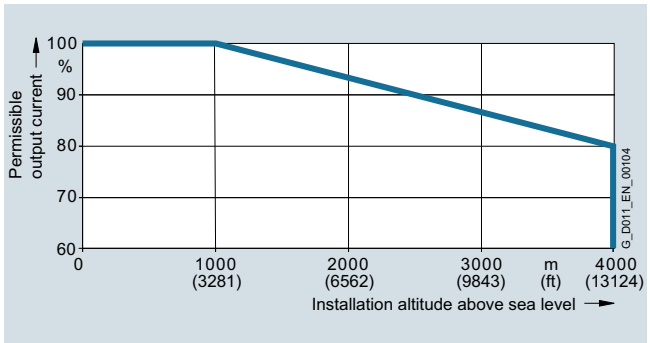

Fig. 9/17 Permissible output current as a function of installation altitude for PM240M Power Modules, frame sizes FSA and FSB

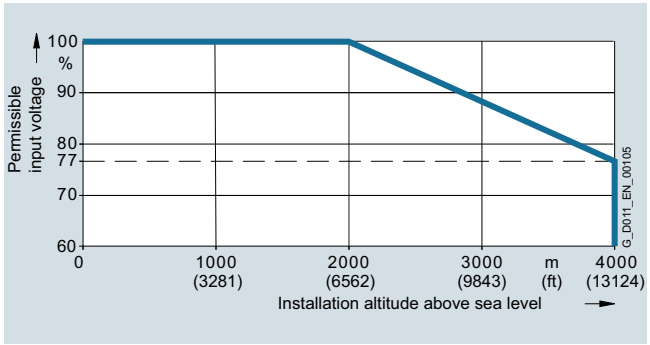

Fig. 9/18 Permissible input voltage as a function of installation altitude for PM240M Power Modules, frame sizes FSA and FSB

Motor frequency

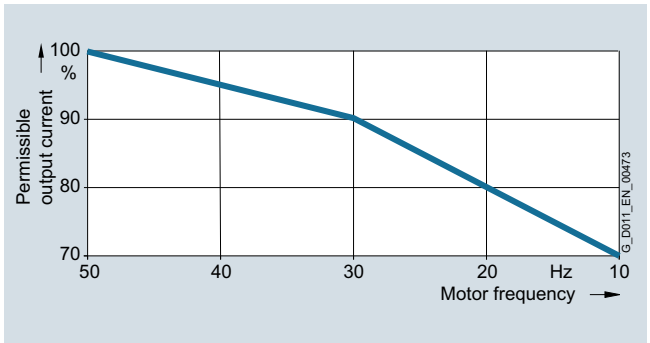

Fig. 9/19 Permissible output current as a function of motor frequency for PM240M Power Modules, frame sizes FSA and FSB

© Siemens AG 2017

Repair switch



Fig. 9/20 SINAMICS G110M repair switch

With the optional repair switch, the SINAMICS G110M can be isolated easily from the line supply at the 400 V 3 AC level on the input side. When this switch is used, no additional external components are required in the 400 V feeder cable.

The repair switch can be locked with three locks. It can therefore be locked to prevent unintentional restart of the drive system.



Fig. 9/21 SINAMICS G110M repair switch, installed

The repair switch is installed and delivered ready for use in combination with our SIMOGEAR geared motor.

Note:

It is possible to install either a repair switch or a 24 V DC power supply, but it is not possible to install both options on the same unit.

Fuses and circuit breakers

The following table lists recommendations for additional line-side components, such as fuses and circuit breakers.

Note regarding use in compliance with IEC standards:
3NA3 type fuses and 3RV type circuit breakers are recommended for European countries. The values in the table take into account the overload capability of the inverter.

Note regarding use in compliance with UL regulations:
Fuses for use in North America must be UL-certified, Class J fuses with a rated voltage of 600 V AC.

Short Circuit Current Rating (SCCR) according to UL

Applies to industrial control panel installations according to NEC Article 409 or UL 508A.

- PM240M: 40 kA

Additional information about the listed fuses and circuit breakers can be found in Catalogs LV 10, IC 10 and IC 10 AO.

Individual protection

Rated power			IEC-compliant			UL/cUL-compliant	
			Fuse		Circuit breaker	Fuse type	
						Rated voltage 600 V AC	
kW	hp	Frame size	A	Article No.	Article No.	Class	Current A
380 ... 480 V 3 AC							
0.37	0.5	FSA	10	**3NA3803**	**3RV2011-1JA10**	J, CC	10
0.75	1.0	FSA	10	**3NA3803**	**3RV2011-1JA10**	J, CC	10
1.1	1.5	FSA	10	**3NA3803**	**3RV2011-1JA10**	J, CC	10
1.5	2.0	FSA	10	**3NA3803**	**3RV2011-1JA10**	J, CC	10
2.2	3	FSB	20	**3NA3807**	**3RV2021-4BA10**	J, CC	20
3	4	FSB	20	**3NA3807**	**3RV2021-4BA10**	J, CC	20
4	5	FSB	20	**3NA3807**	**3RV2021-4BA10**	J, CC	20

The SINAMICS G110M system supports an inverter loop-through of line current to several inverters connected in series.

Further information can be found in the operating instructions on the Internet at
www.siemens.com/sinamics-g110m

Group protection (installation on power bus)

For installations with several inverters, the inverters are normally supplied from a 400 V power bus.

Further information can be found in the operating instructions on the Internet at:
www.siemens.com/sinamics-g110m/documentation

© Siemens AG 2017

Overview

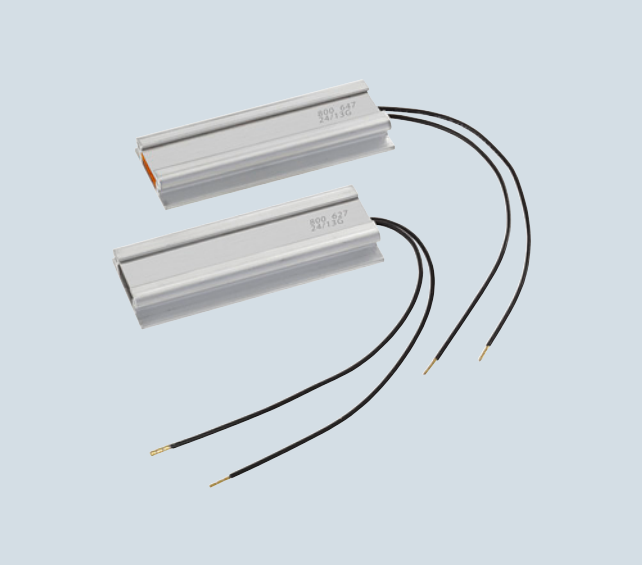

Fig. 9/22 SINAMICS G braking resistors FSA and FSB

Excess energy in the DC link is dissipated in the braking resistors in regenerative operation.

The braking resistors are intended for use with SINAMICS G110M, which have an integrated braking chopper, but cannot regenerate energy to the line supply. For regenerative operation, e.g. the braking of a rotating mass with high moment of inertia, a braking resistor must be connected to convert the resulting energy into heat.

The braking resistors can be mounted on the side of the Control Unit housing at the bottom. The heat from the braking resistor is dissipated over the Control Unit housing. Every braking resistor is equipped with thermal protection. The thermal protection prevents the braking resistor from being thermally overloaded.

All braking resistors are provided as standard with a cable for connecting to the internal terminals.

Technical specifications

Line voltage 380 ... 480 V 3 AC		**Braking resistor**	
Resistor	Ω	350	175
Rated power P_{DB} (Continuous braking power)	kW	0.0075	0.02
Peak power P_{max} (load duration t_a = 12 s with period t = 120 s)	kW	0.075	0.2
Degree of protection		IP20	IP20
Dimensions			
• Width	mm	11	11
• Height	mm	34	34
• Length	mm	84	84
Weight, approx.	kg	0.1	0.1
Suitable for SINAMICS G110M (frame size)		FSA	FSB

Characteristic curve

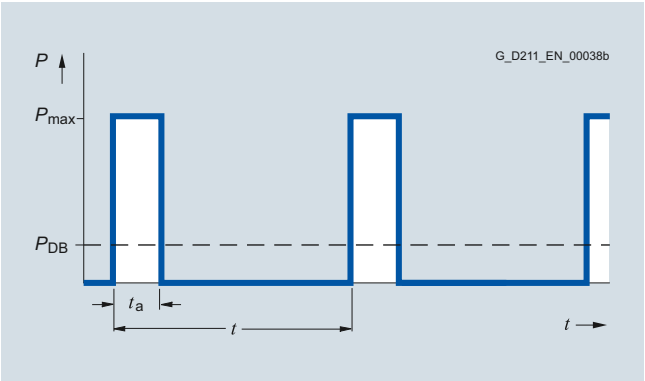

Fig. 9/23 Load diagram for the braking resistors
t_a = 12 s
t = 120 s

© Siemens AG 2017

Overview



Fig. 9/24 24 V DC power supply



Fig. 9/25 24 V DC power supply, installed

The optional 24 V DC power supply enables the internal electronics to be supplied with 24 V DC directly from the DC link. No external cable is thus needed for the 24 V DC supply and only the 400 V 3 AC line supply has to be connected. The optional 24 V DC power supply supplies power to the internal circuitry of the Control Unit, the low-voltage circuits of the Power Module and all inputs and outputs.

Note:

It is possible to install either a 24 V DC power supply or a repair switch, but it is not possible to install both options on the same unit.

The 24 V DC power supply is not compatible with AS-Interface.

Technical specifications

24 V DC power supply	
Operating voltage	24 V DC ±10 %
Current consumption (from DC link at full operation of Power Module and Control Unit including digital outputs)	1.2 A
Output current, max.	2 A

© Siemens AG 2017

Available motor/inverter combinations

Overview

The available motor/inverter combinations that are integrated in the motor as standard are listed in the tables below.

Due to the specific properties of SINAMICS G110M, the following restrictions apply to the options that can be ordered with the motors:

- The inverter and the manual release lever of the brake cannot be mounted in the same position.
- Standby heating is not possible for the motor
- Terminal box position 4 (i.e. the inverter is directed downwards in installation position M1) on request

4-pole, 1 500 rpm at 50 Hz power [1)]

Frame size	Motor	P_{50Hz}	Power Module						
			Frame Size A (FSA)					Frame Size B (FSB)	
		kW	0.37	0.75	1.1	1.5	2.2	3	4
Motors with Standard Efficiency IE1									
71	LA71MG4	0.25	✓						
	LA71MH4	0.37	✓						
Motors with High Efficiency IE2									
80	LE80MD4E	0.55		✓					
	LE80MH4E	0.75		✓	✓				
90	LE90SG4E	1.1			✓	✓			
	LE90LH4E	1.5				✓	✓		
100	LE100LE4E	2.2					✓	✓	
	LE100LK4E	3						✓	✓
112	LE112ME4E	4							✓
Motors with Premium Efficiency IE3									
80	LE80ZMQ4P	0.75		✓	✓				
90	LE90SM4P	1.1			✓	✓			
	LE90ZLR4P	1.5				✓	✓		
100	LE100ZLSA4P	2.2					✓	✓	
	LE100ZLSB4P	3						✓	✓
112	LE112ZMKB4P	4							✓

4-pole, 2 610 rpm at 87 Hz power [1)]

Frame size	Motor	P_{87Hz}	Power Module						
			Frame Size A (FSA)					Frame Size B (FSB)	
		kW	0.37	0.75	1.1	1.5	2.2	3	4
Motors with Standard Efficiency IE1									
71	LA71MG4	0.45		✓					
	LA71MH4	0.65		✓					
Motors with High Efficiency IE2									
80	LE80MD4E	0.95			✓				
	LE80MH4E	1.30				✓			
90	LE90SG4E	1.90					✓		
	LE90LH4E	2.60						✓	
100	LE100LE4E	3.60							✓
Motors with Premium Efficiency IE3									
80	LE80ZMQ4P	1.30				✓			
90	LE90SM4P	1.90					✓		
	LE90ZLR4P	2.60						✓	
100	LE100ZLSA4P	3.60							✓

[1)] Other motor/inverter combinations on request.

© Siemens AG 2017

Accessories

Intelligent Operator Panel IOP Handheld



Fig. 9/26 IOP Handheld for mobile use

The Intelligent Operator Panel IOP Handheld is a very user-friendly and powerful operator panel for commissioning and diagnostics as well as local operator control and monitoring of the SINAMICS G110M distributed inverter.

The IOP supports both entry-level personnel and drive experts. Thanks to the large plain text display, the menu-based operation and the application wizards, it is easy to commission standard drives. A drive can be essentially commissioned without having to use a printed parameter list – as the parameters are displayed in plain text, and explanatory help texts and the parameter filtering function are provided.

Application wizards interactively guide you when commissioning important applications such as conveyor technology, pumps, fans and compressors.

There is a basic commissioning wizard for general commissioning.

The drives are easily controlled manually using directly assigned buttons and the navigation wheel. The IOP Handheld has a dedicated switchover button to switch over from automatic to manual mode.

The drive can be diagnosed in a user-friendly fashion using the plain text display of faults and alarms. Help texts can be obtained by pressing the INFO button.

Up to 2 process values can be displayed graphically or numerically on the status screen/status display.

Process values can also be displayed in technological units.

The IOP Handheld supports standard commissioning of identical drives. For this purpose, a parameter list can be copied from a drive unit into the IOP Handheld and downloaded into other drive units of the same type as required.

The IOP supports the following languages [1]: German, English, French, Italian, Spanish, Portuguese, Dutch, Swedish, Russian, Czech, Polish, Turkish, Finnish.

[1] For additional information, see https://support.automation.siemens.com/WW/view/en/67273266

In addition to the IOP, the IOP Handheld includes a housing with the rechargeable batteries, charging unit and RS232 connecting cable. The charging unit is supplied with connector adapters for Europe, the US and UK. When the batteries are fully charged, the operating time is up to 8 hours.

To connect the IOP Handheld to SINAMICS G110M, the RS232 connecting cable with optical interface is required in addition.

Updating the IOP Handheld

The IOP Handheld can be updated and expanded using the integrated USB interface.

Data to support future drive systems can be transferred from the PC to the IOP Handheld via drag & drop. Further, the USB interface allows user languages and wizards that will become available in the future to be subsequently downloaded and the firmware to be updated for the IOP Handheld.

Selection and ordering data

Description	Article No.
IOP Handheld For use with SINAMICS G120, SINAMICS G120C, SINAMICS G120P, SINAMICS G110D, SINAMICS G120D, SINAMICS G110M Included in the scope of delivery: • IOP • Handheld housing • Rechargeable batteries (4 × AA) • Charging unit (international) • RS232 connecting cable (3 m long, can only be used for SINAMICS G110) • USB cable (1 m long)	**6SL3255-0AA00-4HA0**
RS232 connecting cable With optical interface to connect the SINAMICS G110D, SINAMICS G120D or SINAMICS G110M inverters to the IOP Handheld (2.5 m long)	**3RK1922-2BP00**

9

© Siemens AG 2017

Accessories (continued)

Memory cards



Fig. 9/27 SINAMICS memory card (SD card)

The parameter settings for an inverter can be stored on the SINAMICS SD card. When service is required, e.g. after the inverter has been replaced and the data has been downloaded from the memory card, the system is immediately ready for use again.

- Parameter settings can be written from the memory card to the inverter or saved from the inverter to the memory card.
- Up to 100 parameter sets can be stored.
- The memory card supports standard commissioning without the use of the Intelligent Operator Panel IOP Handheld or the STARTER and SINAMICS Startdrive commissioning tools.

Note:

The memory card is not required for operation and does not have to remain inserted.
In the case of SINAMICS G110M, the parameter set is stored on the Control Unit. Only when a Control Unit is replaced is it necessary to transfer the parameter set to the replacement device.

Selection and ordering data

Description	Article No.
Memory card **SINAMICS SD card** 512 MB	**6SL3054-4AG00-2AA0**
Optional firmware memory card	
SINAMICS SD card **512 MB + firmware V4.7** (Multicard V4.7)	**6SL3054-7EH00-2BA0**
SINAMICS SD card **512 MB + firmware V4.7 SP6 HF1** (Multicard V4.7 SP6 HF1)	**6SL3054-7TD00-2BA0**

For further information about firmware V4.7:

https://support.industry.siemens.com/cs/document/92554110

For further information about firmware V4.7 SP6 HF1:

https://support.industry.siemens.com/cs/document/109482094

PC inverter connection kit 2 (mini USB interface cable for communication with a PC)

For controlling and commissioning an inverter directly from a PC via a point-to-point connection if the appropriate software (STARTER commissioning tool [1], V4.3 SP3 and higher or SINAMICS Startdrive V13 and higher) has been installed.

Selection and ordering data

Description	Article No.
PC inverter connection kit 2 PC inverter connection kit 2 for CU240M Control Units including USB cable (3 m long)	**6SL3255-0AA00-2CA0**

Installation kits

Different installation kits can be ordered as accessories for the Control Units with plug-in connections and Control Units with cable gland connections.

These contain caps or cable glands for protection or electrical connection respectively.

Selection and ordering data

Description	Article No.
Installation kit **for Control Units with cable gland connections** Contains cable glands for the electrical connections	**6SL3566-2VA00-0GA0**
Installation kit **for Control Units with plug-in connections** Contains caps for protection of the electrical connections	**6SL3566-2LA00-0GA0**

STARTER commissioning tool

The STARTER commissioning tool (V4.3 SP3 and higher) supports the commissioning and maintenance of SINAMICS G110M inverters. The operator guidance combined with comprehensive, user-friendly functions for the relevant drive solution allow you to commission the device quickly and easily.

Selection and ordering data

Description	Article No.
STARTER commissioning tool [1] on DVD-ROM	**6SL3072-0AA00-0AG0**

SINAMICS Startdrive commissioning tool

The SINAMICS Startdrive commissioning tool (V13 and higher) supports the commissioning and maintenance of SINAMICS G110M inverters. SINAMICS Startdrive is part of the TIA Portal engineering platform. It supports the intuitive integration of SINAMICS drives in automation. The same operator control concept, the elimination of interfaces and a high degree of user-friendliness make it possible to quickly integrate SINAMICS into an automation process and start it up with the TIA Portal. The TIA Portal with SINAMICS Startdrive offers you a totally integrated engineering platform for the complete application from the project engineering phase through to commissioning and diagnostics.

Selection and ordering data

Description	Article No.
SINAMICS Startdrive commissioning tool [2] on DVD-ROM	**6SL3072-4DA02-0XG0**

[1] The STARTER commissioning tool is also available on the Internet at https://support.automation.siemens.com/WW/view/en/10804985/133100
[2] The SINAMICS Startdrive commissioning tool is also available on the Internet at https://support.automation.siemens.com/WW/view/en/68034568

© Siemens AG 2017

Accessories (continued)

An overview of all available accessories (e.g. connectors and cables) can be found under the following link:
www.siemens.com/distributeddrives-supplementaryproducts

Connecting cables for the Control Unit

PROFINET connecting cable

Flexible connecting cables and plug-in connectors that can be assembled in the field for transmission of data (up to 100 Mbit/s) between industrial Ethernet stations with IP65 degree of protection.

Selection and ordering data

Description	Article No.
IE connecting cable M12-180/M12-180 axial outlet Pre-assembled IE FC TP trailing cable GP 2 × 2 PROFINET type C with two 4-pole M12 plugs (4-pole, D-coded), degree of protection IP65/IP67, UL, plug connector/plug connector (IN/OUT) Length:	
• 0.3 m	**6XV1870-8AE30**
• 0.5 m	**6XV1870-8AE50**
• 1.0 m	**6XV1870-8AH10**
• 1.5 m	**6XV1870-8AH15**
• 2.0 m	**6XV1870-8AH20**
• 3.0 m	**6XV1870-8AH30**
• 5.0 m	**6XV1870-8AH50**
• 10 m	**6XV1870-8AN10**
• 15 m	**6XV1870-8AN15**
IE connecting cable M12-180/ IE FC RJ45 Plug 145 axial outlet Pre-assembled IE FC TP trailing cable GP 2 x 2 (PROFINET type C) with M12 plug (D-coded) and IE FC RJ45 plug, IP65/IP67 degree of protection Length:	
• 2.0 m	**6XV1871-5TH20**
• 3.0 m	**6XV1871-5TH30**
• 5.0 m	**6XV1871-5TH50**
• 10 m	**6XV1871-5TN10**
• 15 m	**6XV1871-5TN15**
IE M12 Plug PRO axial outlet For assembly in the field, M12 connector (D-coded), metal enclosure, UL, fast connection method, plug connector	
• 1 unit	**6GK1901-0DB20-6AA0**
• 8 units	**6GK1901-0DB20-6AA8**

PROFIBUS connecting cable

Flexible plug-in cables/connectors for transmission of data (up to 12 Mbit/s) from PROFIBUS stations.

Selection and ordering data

Description	Article No.
PROFIBUS M12 plug-in cable axial outlet Pre-assembled with two 5-pole M12 plug/socket connectors, UL Length:	
• 0.3 m	**6XV1830-3DE30**
• 0.5 m	**6XV1830-3DE50**
• 1.0 m	**6XV1830-3DH10**
• 1.5 m	**6XV1830-3DH15**
• 2.0 m	**6XV1830-3DH20**
• 3.0 m	**6XV1830-3DH30**
• 5.0 m	**6XV1830-3DH50**
• 10 m	**6XV1830-3DN10**
• 15 m	**6XV1830-3DN15**
PROFIBUS M12 plug connector axial outlet 5-pole, B-coded, metal enclosure, 1 package = 5 units	
• Pin insert	**6GK1905-0EA00**
• Female contact insert	**6GK1905-0EB00**

AS-Interface connecting cable

Selection and ordering data

Description	Article No.
AS-Interface M12 feeder to connect the AS-Interface and the U_{AUX} cable to an M12 socket, UL:	
• 1.0 m	**3RK1901-1NR21**
• 2.0 m	**3RK1901-1NR22**

© Siemens AG 2017

Accessories (continued)

Connecting cables/connectors for supplying the Control Unit with power

Selection and ordering data

Description	Article No.
7/8" plug-in cable, axial outlet For 24 V switched and unswitched, pre-assembled with 2 × 7/8'' at both ends (axial), 5 × 1.5 mm² 5-pole plug/socket connectors Length:	
• 0.3 m	**6XV1822-5BE30**
• 0.5 m	**6XV1822-5BE50**
• 1.0 m	**6XV1822-5BH10**
• 1.5 m	**6XV1822-5BH15**
• 2.0 m	**6XV1822-5BH20**
• 3.0 m	**6XV1822-5BH30**
• 5.0 m	**6XV1822-5BH50**
• 10 m	**6XV1822-5BN10**
• 15 m	**6XV1822-5BN15**
7/8" power cable, angled outlet, pre-assembled at one end For 24 V switched and unswitched, pre-assembled with 1 × 7/8" angled at one end, 5 × 1.5 mm² 5-pole socket connector Length:	
• 3.0 m	**3RK1902-3GB30**
• 5.0 m	**3RK1902-3GB50**
• 10 m	**3RK1902-3GC10**
7/8" power cable, angled outlet For 24 V switched and unswitched, pre-assembled with 2 × 7/8" angled at both ends, 5 × 1.5 mm², 5-pole plug/socket connectors Length:	
• 3.0 m	**3RK1902-3NB30**
• 5.0 m	**3RK1902-3NB50**
• 10 m	**3RK1902-3NC10**
7/8" plug-in connector, axial outlet 5-pole, B-coded, plastic enclosure, 1 package = 5 units	
• Pin insert (IN)	**6GK1905-0FA00**
• Female contact insert (OUT)	**6GK1905-0FB00**
7/8" plug-in connector, angled outlet 5-pole, B-coded, plastic enclosure, 1 package = 5 units	
• Pin insert (IN)	**3RK1902-3BA00**
• Female contact insert (OUT)	**3RK1902-3DA00**

Connecting cables and connectors for digital inputs and outputs

Selection and ordering data

Description	Article No.
M12 plug-in cable, pre-assembled at both ends, axial outlet M12 straight plug, M12 straight socket, screw mounting, 3-pole, 3 x 0.34 mm², A-coded, black PUR sheath, max. 4 A Length:	
• 1.5 m	**3RK1902-4PB15-3AA0**
M12 connector Y CABLE for distributed I/O for dual connection of I/Os using single 5-pole M12 cables, 200 mm	
• Straight	**6ES7194-6KA00-0XA0**

Connecting cables and connectors for analog inputs

Selection and ordering data

Description	Article No.
M12 cable connector 8-pole plug connector	
• Straight cable outlet	Ordered from and supplied by KnorrTec
T distribution piece To connect two analog inputs 8-pole M12 male connector to 2 × M12 socket, 4-pole, angled	Ordered from and supplied by KnorrTec

Connecting cables to the power supply

Connecting cable pre-assembled at one end and connector sets to connect to the line supply

Selection and ordering data

Description	Article No.
Connecting cable pre-assembled at one end Power supply cable, open at one end, for HAN Q4/2, angled, 4 × 4 mm²	
• 1.5 m long	**3RK1911-0DB13**
• 5 m long	**3RK1911-0DB33**
Connector set for the power supply Socket insert HAN Q4/2, 5 socket contacts, grommet housing, angled outlet including screw connection	
• 2.5 mm²	**3RK1911-2BE50**
• 4 mm²	**3RK1911-2BE10**
• 6 mm²	**3RK1911-2BE30**

Connector insert for power loop-through

Selection and ordering data

Description	Article No.
Connector set for power loop-through Plug insert HAN Q4/2, 4 socket contacts, grommet housing, angled outlet including screw connection	
• 2.5 mm²	**3RK1911-2BF50**
• 4 mm²	**3RK1911-2BF10**

© Siemens AG 2017

Accessories (continued)

Power bus distribution 400 V in IP65 degree of protection

Selection and ordering data

Not essential (daisy chaining within device);
use is optional.

Description	Article No. (to order, see Solution Partners)
Power T clamp connector for 2.5 ... 6 mm² With attached 7-pole connector, female contact insert, grommet housing, UL Seals for various cable cross-sections must be ordered separately	Ordered from and supplied by Harting
T clamp connector Completely pre-assembled	Ordered from and supplied by KnorrTec
T distributor box, IDC connection power cable Pre-assembled, UL, uncut power cable, 2.5 ... 6 mm², Push-in connection: 1.5 ... 6 mm² Seals for various cable cross-sections must be ordered separately	Ordered from and supplied by Weidmüller
Y distributor For direct connection of 400 V supply line, HAN Q4/2, conductor cross-section 1.5 ... 4 mm²	Ordered from and supplied by Harting

More information

An overview of supplementary products (connectors and cables) can be found under the following link:
www.siemens.com/distributeddrives-supplementaryproducts

For further information about the connecting cables and plug-in connectors mentioned above, please refer to Catalog IK PI.



Fig. 9/28 Siemens Solution Partners image

Further selected accessories are available from Siemens Solution Partners.
Please go to the "Solution Partner Finder" and select technology "Distributed Field Installation System".
www.siemens.com/automation/partnerfinder

Overview

A Spare Parts Kit can be ordered, comprising small parts such as replacement seals, caps, PROFIBUS address windows and screws.

Selection and ordering data

Description	Article No.
Spare Parts Kit for SINAMICS G110M Comprising replacement seals, caps, connectors and screws	**6SL3500-0TK02-0AA0**

© Siemens AG 2017

Motors with SINAMICS G110M

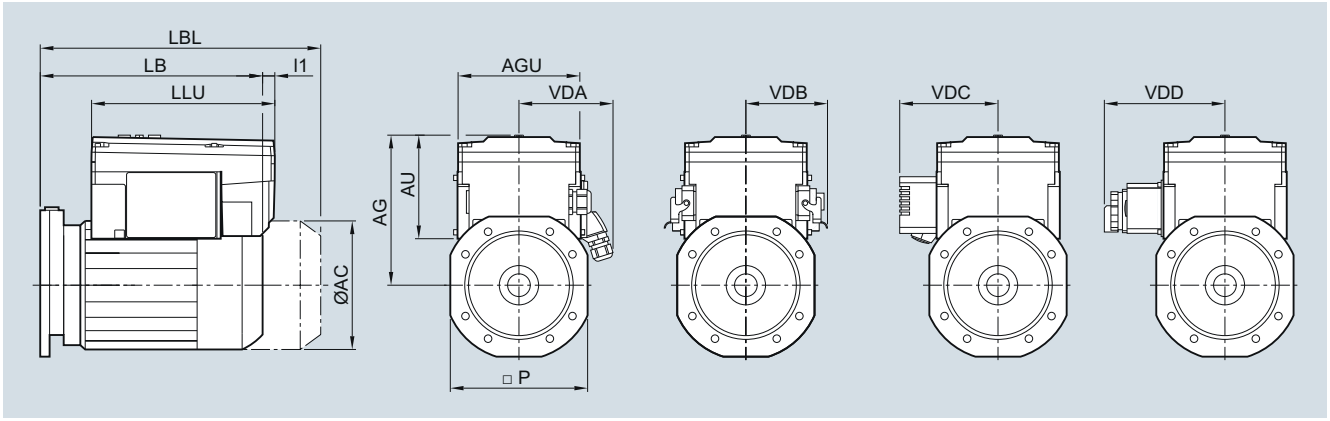

The diagram is for terminal box position 2A (for further information about the terminal box position, see page 11/11).

Motor	Gearbox type						SINAMICS G110M												
							Power Module	Dimensions									Cable gland	Plug-in tech-nology	24 V DC power supply	Repair switch
	D/Z	E	FD/FZ	B	K	C	Frame size	LB	LBL	P	AC	I1	AG	AU	LLU	AGU	VDA	VDB	VDC	VDD
LA71	19	-	-	19	-	-	**FSA**	184.5	239.5	-	138.8	74.5	184.5	137	270	161	124.5	108	130	171
	29	-	29	29	-	29		226	281	120										
	39	39	39	39	39	39														
	49	49	49	49	49	49		216.5	271.5	160										
	59	-	-	-	-	-														
	69	69	69	-	69	69														
	-	-	-	-	79	-														
	79	-	79	-	-	-		214.5	269.5	198										
	-	-	-	-	89	89														
LE80	19	-	-	19	-	-	**FSA**	240	300	-	156.3	35	191	137	270	161	124.5	108	130	171
	29	-	29	29	-	29		290	350	120										
	39	39	39	39	39	39														
	49	49	49	49	49	49		280.5	340.5	160										
	59	-	-	-	-	-														
	69	69	69	-	69	69														
	-	-	-	-	79	-														
	79	-	79	-	-	-		274.5	334.5	198										
	-	-	-	-	89	89														
	89	89	89	-	-	-		261.5	321.5	245										
	-	-	-	-	109	-														
LE80Z	19	-	-	19	-	-	**FSA**	275	335	-	156.3	35	191	137	270	161	124.5	108	130	171
	29	-	29	29	-	29		325	385	120										
	39	39	39	39	39	39														
	49	49	49	49	49	49		315.5	375.5	160										
	59	-	-	-	-	-														
	69	69	69	-	69	69														
	-	-	-	-	79	-														
	79	-	79	-	-	-		309.5	369.5	198										
	-	-	-	-	89	89														
	89	89	89	-	-	-		296.5	356.5	245										
	-	-	-	-	109	-														

© Siemens AG 2017

Motors with SINAMICS G110M (continued)

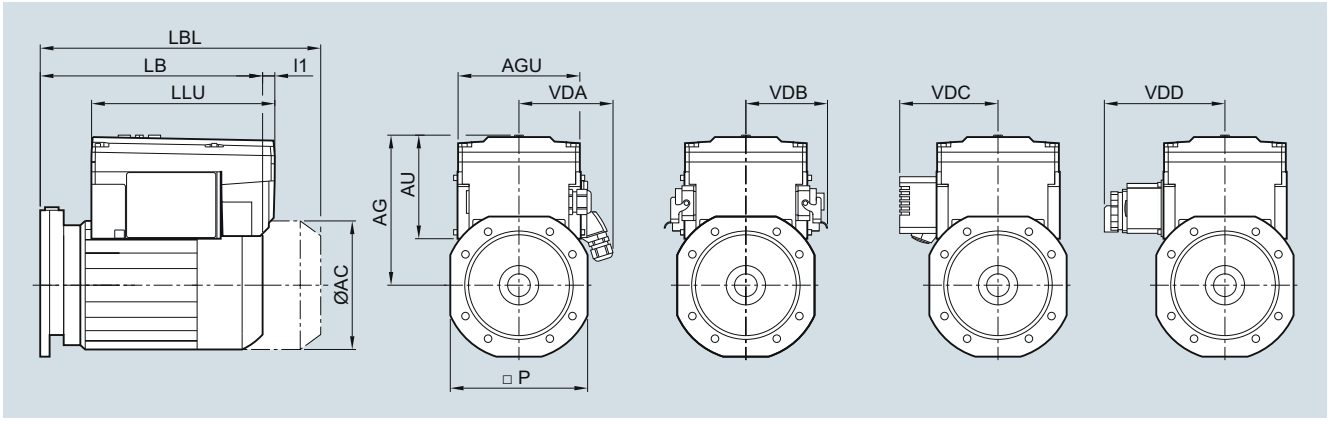

The diagram is for terminal box position 2A (for further information about the terminal box position, see page 11/11).

Motor	Gearbox type						SINAMICS G110M												
							Power Module	Dimensions									Cable gland	Plug-in tech-nology	24 V DC power supply	Repair switch
	D/Z	E	FD/FZ	B	K	C	Frame size	LB	LBL	P	AC	I1	AG	AU	LLU	AGU	VDA	VDB	VDC	VDD
LE90	29	-	29	29	-	29	**FSA**	351.5	421.5	120	173.8	11	196	137	270	161	124.5	108	130	171
	39	39	39	39	39	39														
	49	49	49	49	49	49		342	412	160										
	59	-	-	-	-	-														
	69	69	69	-	69	69														
	-	-	-	-	79	-														
	79	-	79	-	-	-		336	406	198										
	-	-	-	-	89	89														
	89	89	89	-	-	-		323	393	245										
	-	-	-	-	109	-														
	-	-	-	-	129	-		316	386	300										
	109	109	109	-	-	-														
	129	129	129	-	-	-		309	379	350										
	-	-	-	-	149	-														
LE90Z	29	-	29	29	-	29	**FSA**	391.5	461.5	120	173.8	11	196	137	270	161	124.5	108	130	171
	39	39	39	39	39	39														
	49	49	49	49	49	49		382	452	160										
	59	-	-	-	-	-														
	69	69	69	-	69	69														
	-	-	-	-	79	-														
	79	-	79	-	-	-		376	446	198										
	-	-	-	-	89	89														
	89	89	89	-	-	-		363	433	245										
	-	-	-	-	109	-														
	-	-	-	-	129	-		356	426	300										
	109	109	109	-	-	-														
	129	129	129	-	-	-		349	419	350										
	-	-	-	-	149	-														
LE90	29	-	29	29	-	29	**FSB**	351.5	421.5	120	173.8	50.5	196	137	309.5	181	124.5	108	130	171
	39	39	39	39	39	39														
	49	49	49	49	49	49		342	412	160										
	59	-	-	-	-	-														
	69	69	69	-	69	69														
	-	-	-	-	79	-														
	79	-	79	-	-	-		336	406	198										
	-	-	-	-	89	89														
	89	89	89	-	-	-		323	393	245										
	-	-	-	-	109	-														
	-	-	-	-	129	-		316	386	300										
	109	109	109	-	-	-														
	129	129	129	-	-	-		309	379	350										
	-	-	-	-	149	-														

9

© Siemens AG 2017

Motors with SINAMICS G110M (continued)

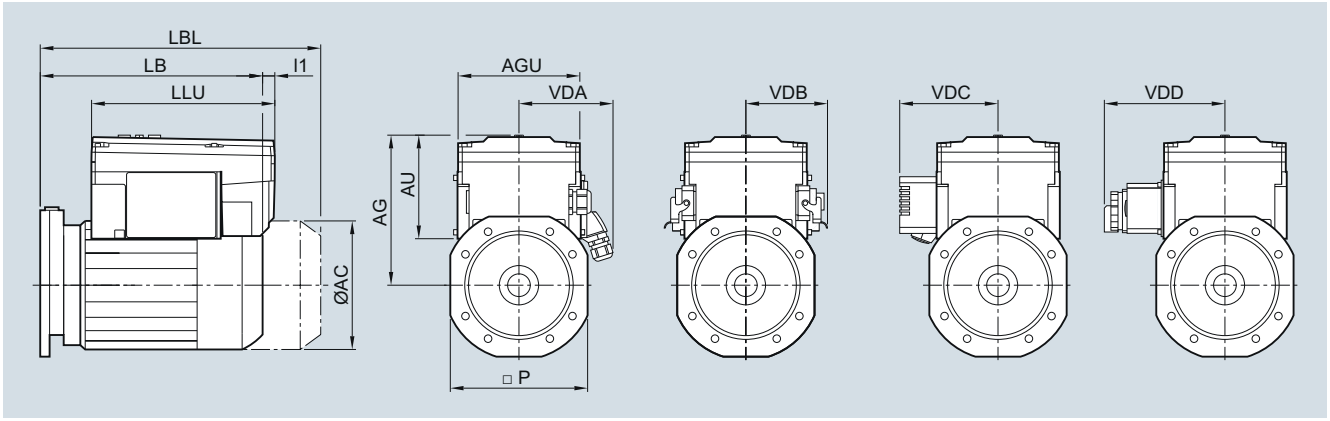

The diagram is for terminal box position 2A (for further information about the terminal box position, see page 11/11).

Motor	Gearbox type						SINAMICS G110M												
							Power Module	Dimensions								Cable gland	Plug-in	24 V DC power supply	Repair switch
	D/Z	E	FD/FZ	B	K	C	Frame size	LB	LBL	P	AC	I1	AG	AU	LLU	AGU	VDA	VDB	VDC	VDD
LE90Z	29	-	29	29	-	29	**FSB**	391.5	461.5	120	173.8	50.5	196	137	309.5	181	124.5	108	130	171
	39	39	39	39	39	39														
	49	49	49	49	49	49		382	452	160										
	59	-	-	-	-	-														
	69	69	69	-	69	69														
	-	-	-	-	79	-														
	79	-	79	-	-	-		376	446	198										
	-	-	-	-	89	89														
	89	89	89	-	-	-		363	433	245										
	-	-	-	-	109	-														
	-	-	-	-	129	-		356	426	300										
	109	109	109	-	-	-														
	129	129	129	-	-	-		349	419	350										
	-	-	-	-	149	-														
LE100	29	-	29	29	-	29	**FSB**	408	486.5	120	198	37.5	226	137	309.5	181	124.5	108	130	171
	39	39	39	39	39	39														
	49	49	49	49	49	49		398.5	477	160										
	59	-	-	-	-	-														
	69	69	69	-	69	69														
	-	-	-	-	79	-														
	79	79	79	-	-	-		392.5	471	198										
	-	-	-	-	89	89														
	89	89	89	-	-	-		375.5	454	245										
	-	-	-	-	109	-														
	-	-	-	-	129	-		366.5	445	300										
	109	109	109	-	-	-														
	129	129	129	-	-	-		357.5	436	350										
	-	-	-	-	149	-														
	149	149	149	-	169	-		356	434.5	405										
LE100Z	29	-	29	29	-	29	**FSB**	443	521.5	120	198	37.5	226	137	309.5	181	124.5	108	130	171
	39	39	39	39	39	39														
	49	49	49	49	49	49		433.5	512	160										
	59	-	-	-	-	-														
	69	69	69	-	69	69														
	-	-	-	-	79	-														
	79	-	79	-	-	-		427.5	506	198										
	-	-	-	-	89	89														
	89	89	89	-	-	-		410.5	489	245										
	-	-	-	-	109	-														
	-	-	-	-	129	-				300										
	109	109	109	-	-	-														
	129	129	129	-	-	-		392.5	471	350										
	-	-	-	-	149	-														
	149	149	149	-	169	-		391	469.5	405										

© Siemens AG 2017

Motors with SINAMICS G110M (continued)

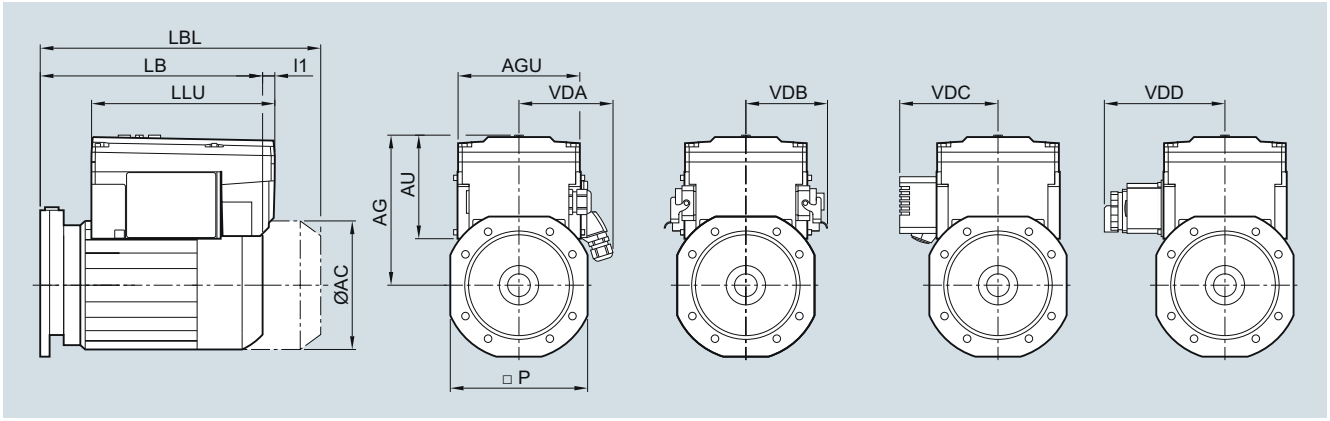

The diagram is for terminal box position 2A (for further information about the terminal box position, see page 11/11).

Motor	Gearbox type						SINAMICS G110M												
							Power Module	Dimensions									Cable gland	Plug-in	24 V DC power supply	Repair switch
	D/Z	E	FD/FZ	B	K	C	Frame size	LB	LBL	P	AC	I1	AG	AU	LLU	AGU	VDA	VDB	VDC	VDD
LE112	29	-	29	29	-	29	**FSB**	418	491	120	222	29	237	137	309.5	181	124.5	108	130	171
	39	39	39	39	39	39														
	49	49	49	49	49	49		408.5	481.5	160										
	59	-	-	-	-	-														
	69	69	69	-	69	69														
	-	-	-	-	79	-														
	79	-	79	-	-	-		402.5	475.5	198										
	-	-	-	-	89	89														
	89	89	89	-	-	-		385.5	458.5	245										
	-	-	-	-	109	-														
	-	-	-	-	129	-		376.5	449.5	300										
	109	109	109	-	-	-														
	129	129	129	-	-	-		367.5	440.5	350										
	-	-	-	-	149	-														
	149	149	149	-	169	-		366	439	405										
	169	-	169	-		-		353.5	426.5	465										
	189	-	189	-	189	-														
LE112Z	29	-	29	29	-	29	**FSB**	443	516	120	222	29	237	137	309.5	181	124.5	108	130	171
	39	39	39	39	39	39														
	49	49	49	49	49	49				160										
	59	-	-	-	-	-														
	69	69	69	-	69	69														
	-	-	-	-	79	-														
	79	-	79	-	-	-		427.5	500.5	198										
	-	-	-	-	89	89														
	89	89	89	-	-	-		410.5	483.5	245										
	-	-	-	-	109	-														
	-	-	-	-	129	-				300										
	109	109	109	-	-	-														
	129	129	129	-	-	-		392.5	465.5	350										
	-	-	-	-	149	-														
	149	149	149	-	-	-		391	464	405										
	169	-	169	-		-		353.5	426.5	465										
	189	-	189	-	189	-														

© Siemens AG 2017

Notes

© Siemens AG 2017

Gearbox options

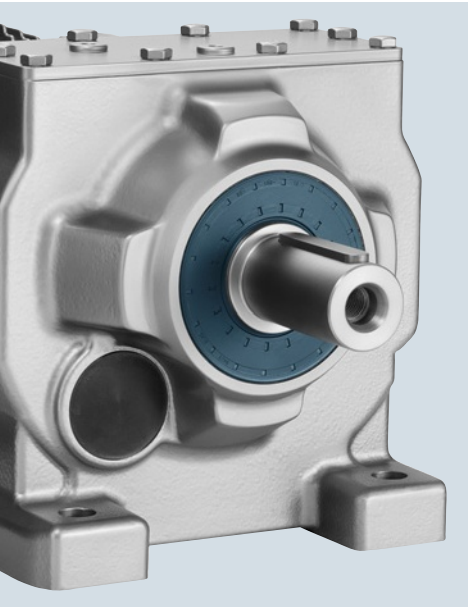

10/2 Mounting position

10/2 Overview

Helical gearbox

10/4 Foot-mounted design

10/7 Foot/flange-mounted design

10/9 Flange-mounted design or with housing flange

Parallel shaft gearbox

10/13 Shaft-mounted design

10/15 Flange-mounted design or with housing flange

10/17 Foot-mounted design

Bevel gearbox B

10/19 Foot-mounted design

10/21 Housing flange design and flange-mounted design

10/23 Shaft-mounted design

Bevel gearbox K

10/25 Foot-mounted design

10/26 Housing flange design and flange-mounted design

10/27 Shaft-mounted design

Helical worm gearbox

10/28 Shaft-mounted design

10/30 Housing flange design and flange-mounted design

10/32 Foot-mounted design

Worm gearbox

10/34 Foot-mounted, flange-mounted, shaft-mounted and housing flange designs

10/35 Tandem gearboxes

10/36 Special mounting positions

10/37 Mounting

Mounting types

10/37 Overview

10/38 Flange-mounted designs

10/39 • Water drain holes at the output flange

10/40 • Output flange seal

10/40 Parallel shaft gearboxes F.AD in a shaft-mounted design

10/40 Bevel gearboxes KAD in a shaft-mounted design

10/41 Bevel gearboxes BAD in a shaft-mounted design

10/41 Helical worm gearboxes CAD in a shaft-mounted design

10/42 Worm gearboxes SAD in a shaft-mounted design

Shaft designs

10/43 Selection and ordering data

10/45 SIMOLOC assembly system

10/46 Hollow shaft cover

10/46 Output shaft bearings

10/46 Radially reinforced output shaft bearings

10/47 Lubrication and sealing

Overview

10/47 • Lubrication

10/47 • Sealing

10/47 • Oil quantities

10/47 Sealing system

10/47 Roller bearing greases for gearboxes and motors

10/48 Selection

10/49 Venting and oil level control

Venting

10/49 Overview

10/51 Pressure breather valve

10/52 Oil expansion unit

Oil level control

10/54 Oil level checking screw

10/54 Oil drain

10/55 Electrical oil level monitoring system – Sensor

10/56 Special version

10/56 Reduced-backlash version

10/56 Shrink-glued output gearwheel

© Siemens AG 2017

Overview

The mounting position must be specified when you place your order to ensure that the gearbox is supplied with the correct quantity of oil.

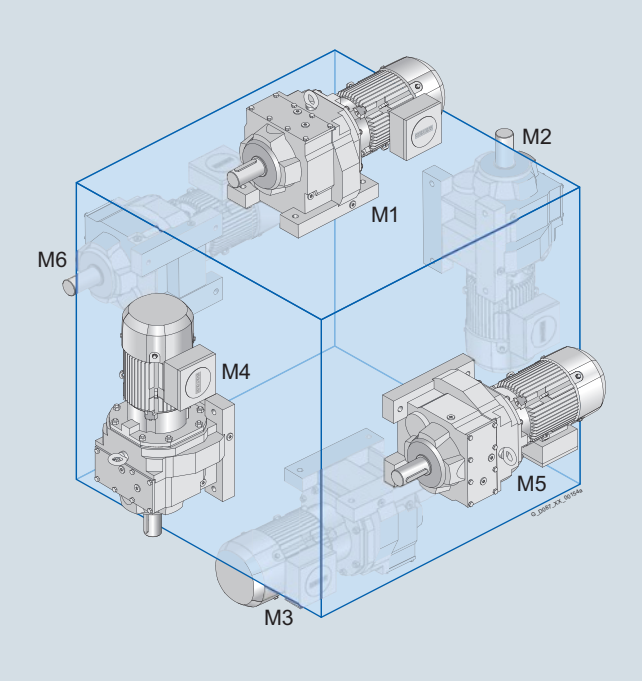

Fig. 10/1 Helical geared motors

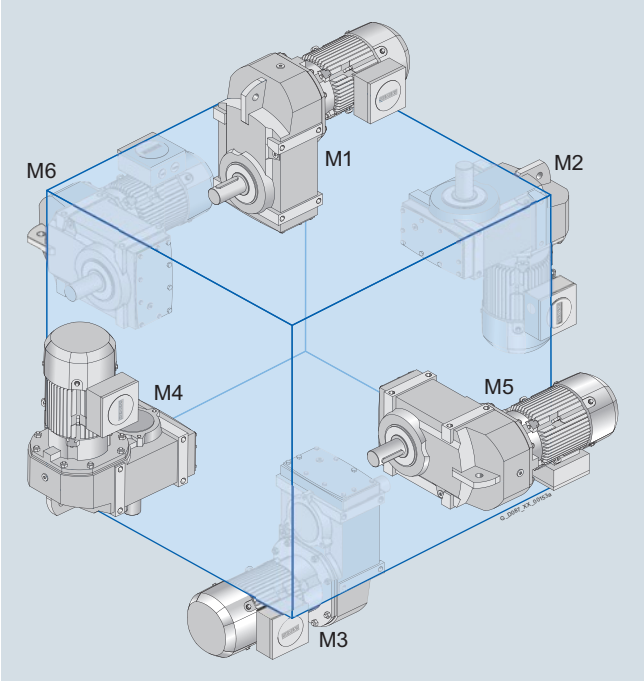

Fig. 10/2 Parallel shaft geared motors

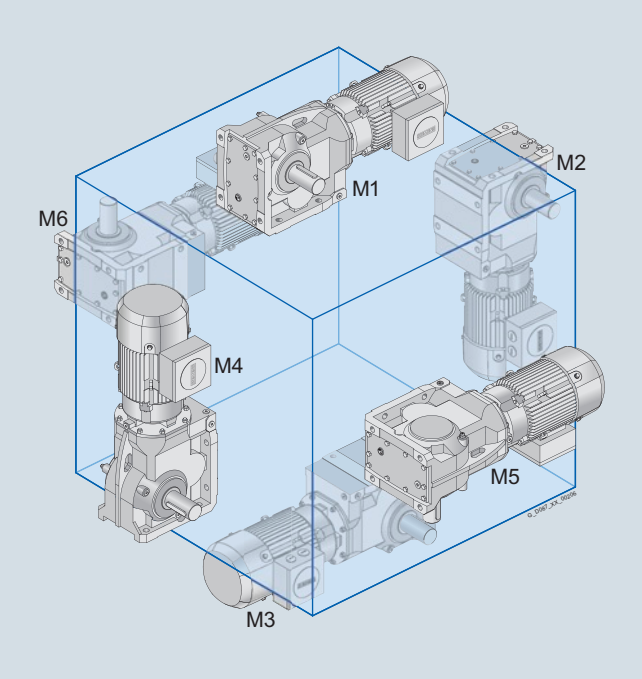

Fig. 10/3 Bevel geared motors

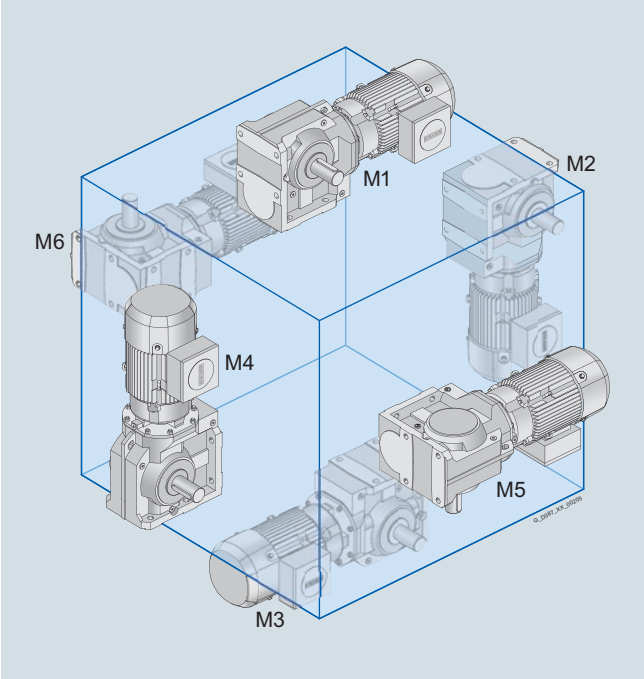

Fig. 10/4 Helical worm geared motors

© Siemens AG 2017

Overview (continued)

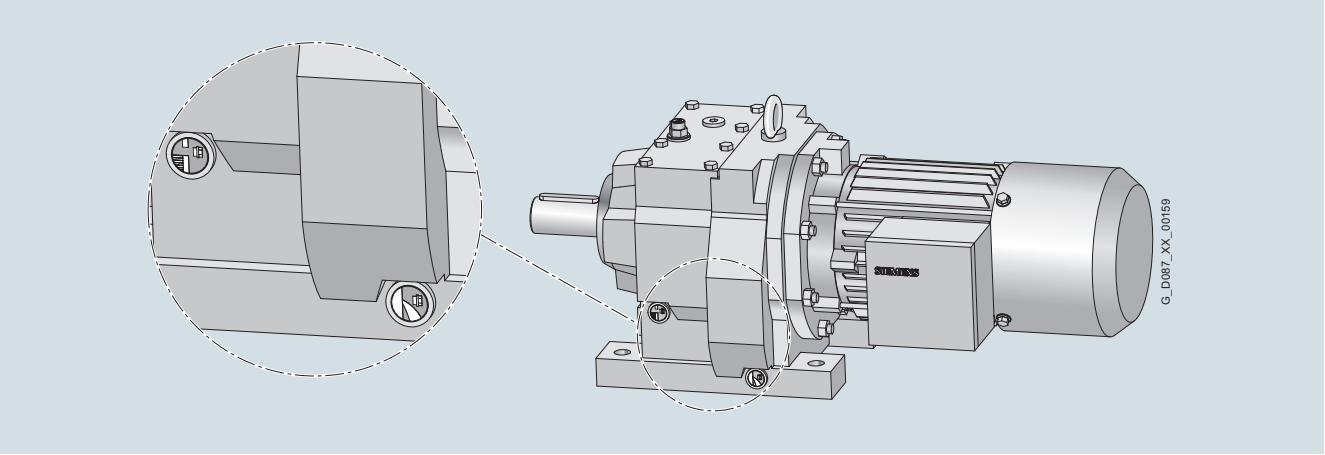

Fig. 10/5 Dimensional drawing from DT Configurator with details

An explanation of the symbols used to represent mounting positions can be found on the following pages

Symbol	
Oil valves	
	Venting
	Oil drain
	Oil level checking screw
	Venting main gearbox (applies only to tandem geared motors)
	Oil drain main gearbox (applies only to tandem geared motors)
Supplements	
*	On opposite side
A, B	Output side A, output side B
②	2-stage gearbox
③	3-stage gearbox
[1] ... [4]	Terminal box position

Note:

The DT Configurator can be used to configure SIMOGEAR geared motors.

The DT Configurator is available in conjunction with the electronic catalog CA 01 on DVD. In addition, the DT Configurator can be used on the Internet without requiring any installation.

The DT Configurator can be found in the Siemens Mall at the following address:
www.siemens.com/dt-configurator

For the selected mounting position, the 3D images show the exact position of the oil valves.

© Siemens AG 2017

Foot-mounted design

Helical gearboxes Z and D, sizes 19 and 29

Oil valves

Sizes 19 and 29 are lubricated for life.

For an explanation of the symbols, see page 10/3.

M1

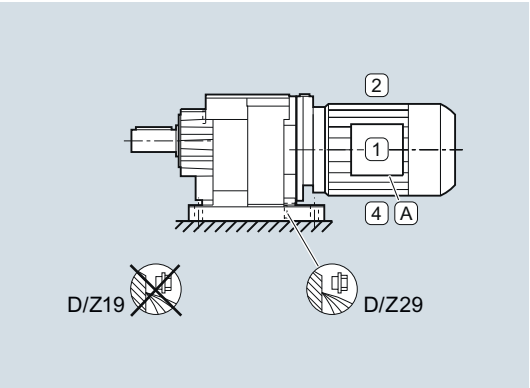

Order code:

M1 **D01**

M2

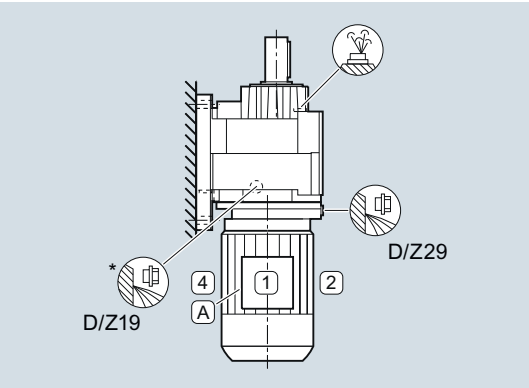

Order code:

M2 **D02**

M3

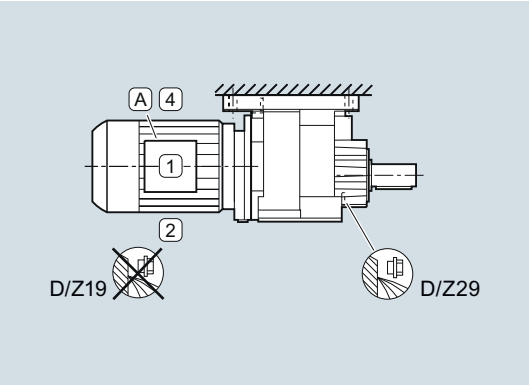

Order code:

M3 **D03**

M4

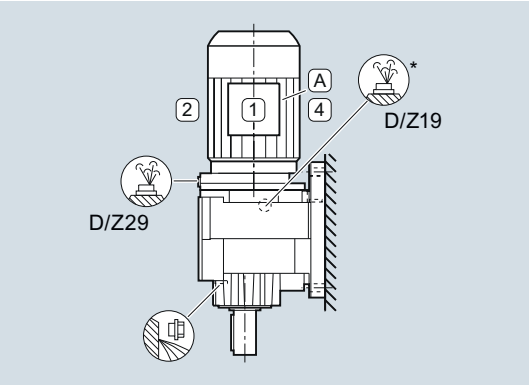

Order code:

M4 **D04**

M5

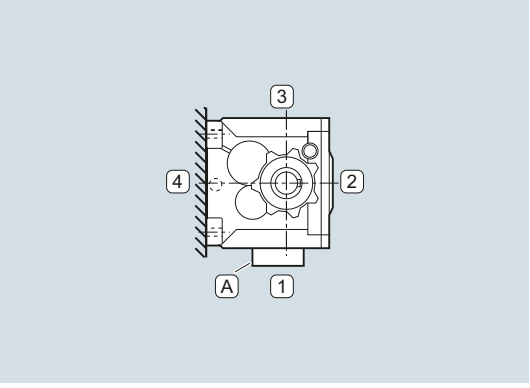

Order code:

M5 **D05**

M6

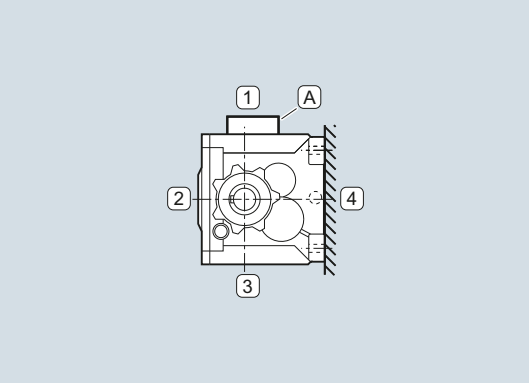

Order code:

M6 **D06**

© Siemens AG 2017

Foot-mounted design (continued)

Helical gearboxes Z and D, sizes 39 to 189

Oil valves

For an explanation of the symbols, see page 10/3.

M1

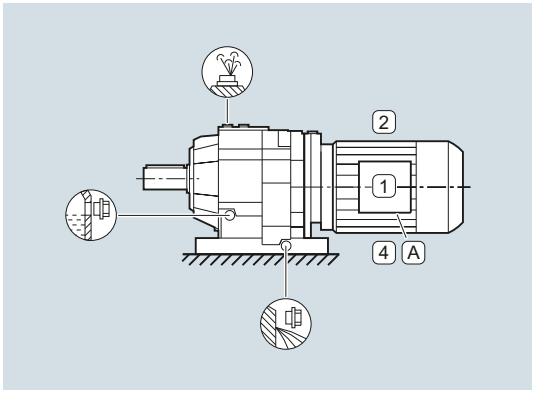

Order code:

M1 **D01**

M2

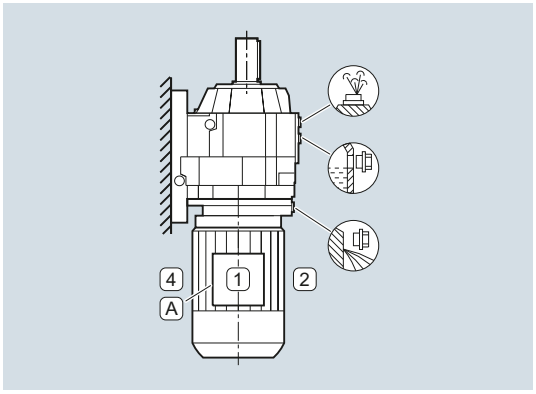

Order code:

M2 **D02**

M3

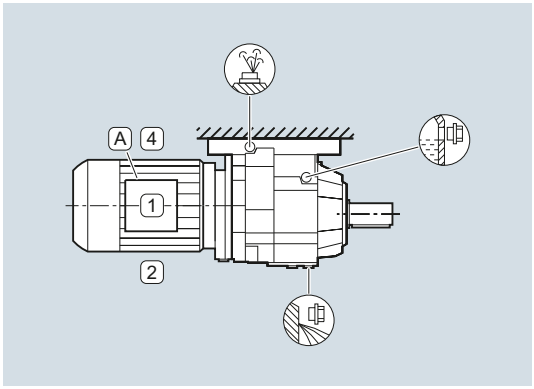

Order code:

M3 **D03**

M4

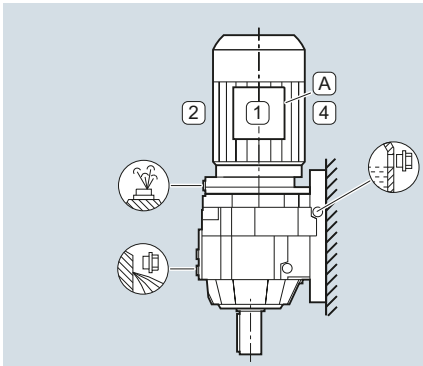

Order code:

M4 **D04**

M5

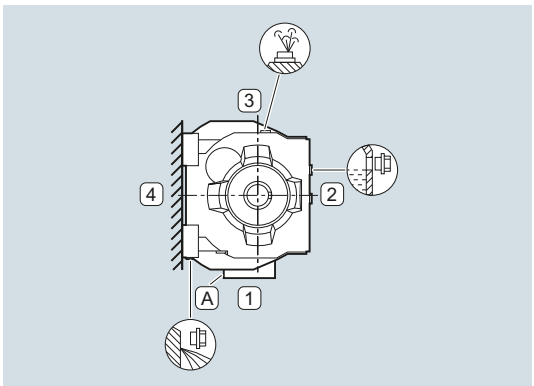

Order code:

M5 **D05**

M6

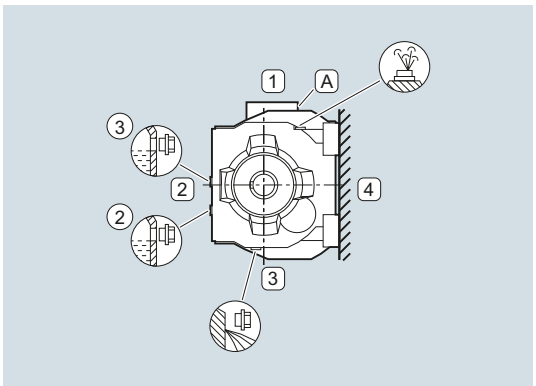

Order code:

M6 **D06**

© Siemens AG 2017

Foot-mounted design (continued)

Helical gearboxes E, sizes 39 to 149

Oil valves

For an explanation of the symbols, see page 10/3.

M1

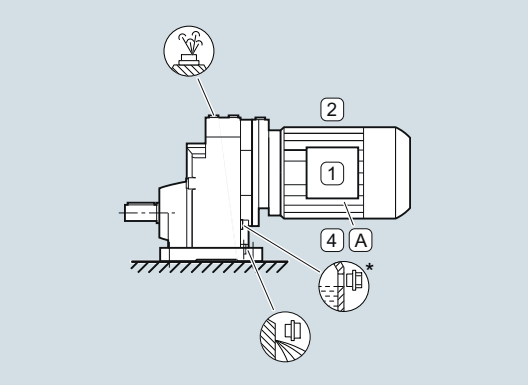

Order code:

M1	**D01**

M2

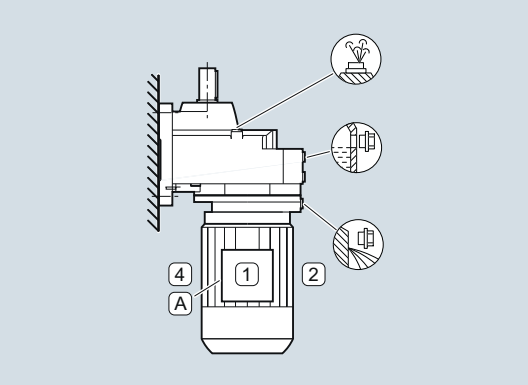

Order code:

M2	**D02**

M3

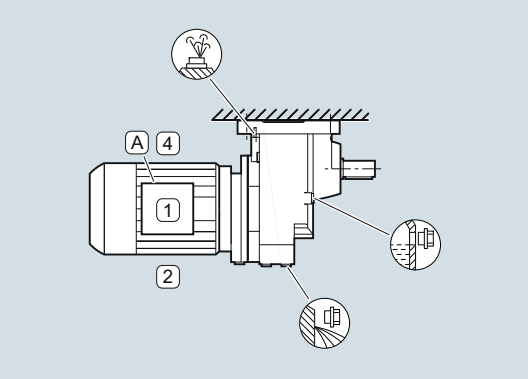

Order code:

M3	**D03**

M4

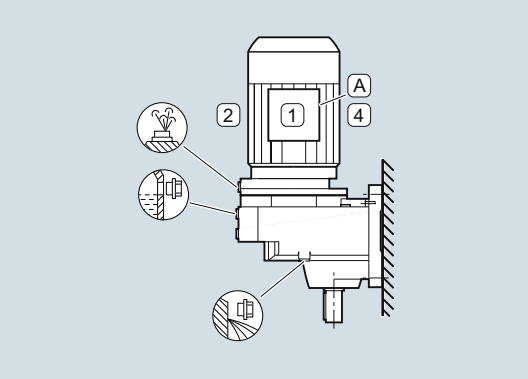

Order code:

M4	**D04**

M5

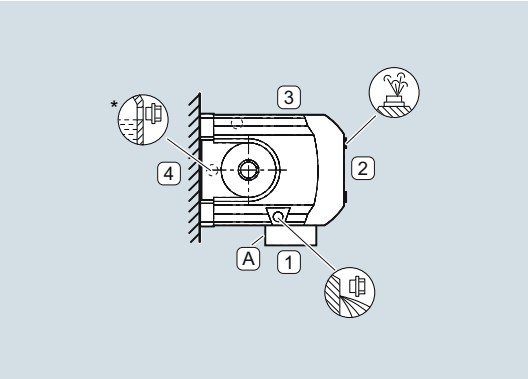

Order code:

M5	**D05**

M6

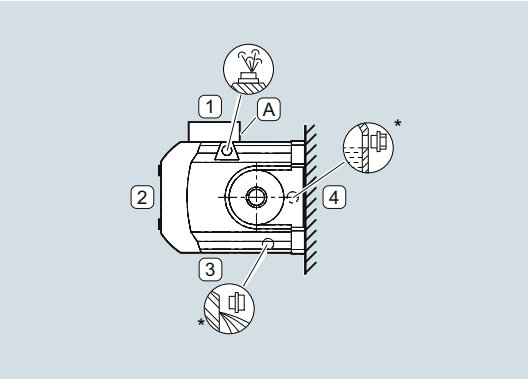

Order code:

M6	**D06**

© Siemens AG 2017

Foot/flange-mounted design

Helical gearboxes ZB and DB, size 29

Oil valves

Size 29 is lubricated for life.

For an explanation of the symbols, see page 10/3.

M1

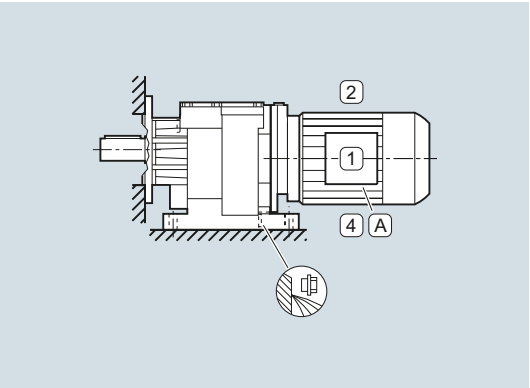

Order code:

M1 **D01**

M2

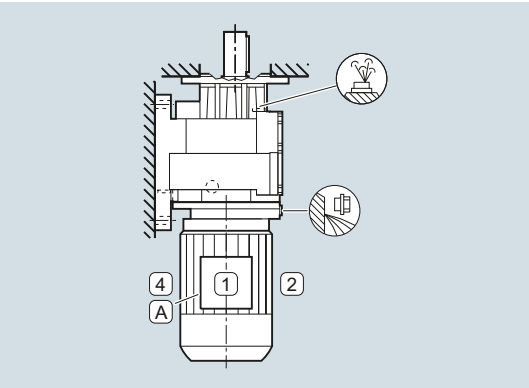

Order code:

M2 **D02**

M3

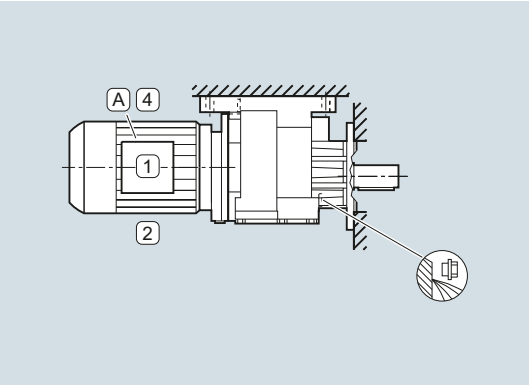

Order code:

M3 **D03**

M4

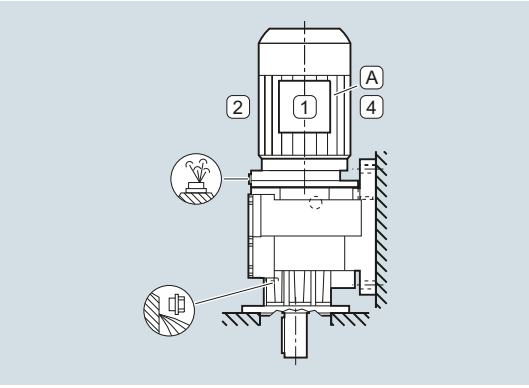

Order code:

M4 **D04**

M5

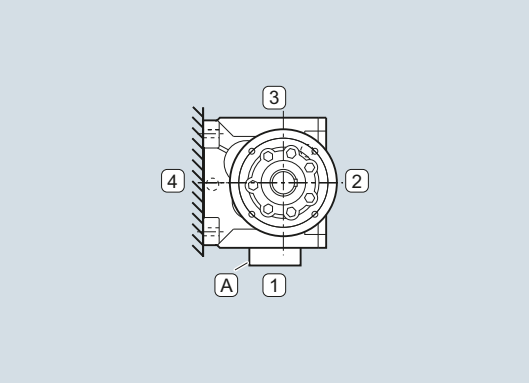

Order code:

M5 **D05**

M6

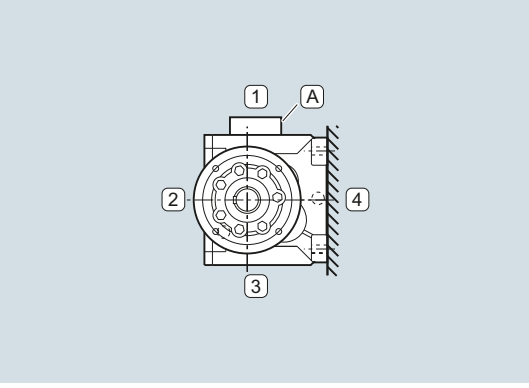

Order code:

M6 **D06**

© Siemens AG 2017

Foot/flange-mounted designs (continued)

Helical gearboxes ZB and DB, sizes 39 to 89

Oil valves

For an explanation of the symbols, see page 10/3.

M1

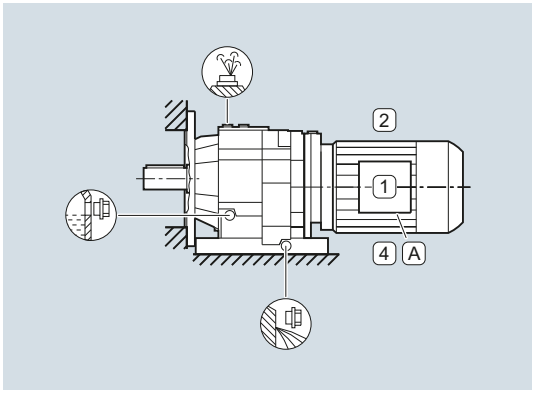

Order code:

M1	**D01**

M2

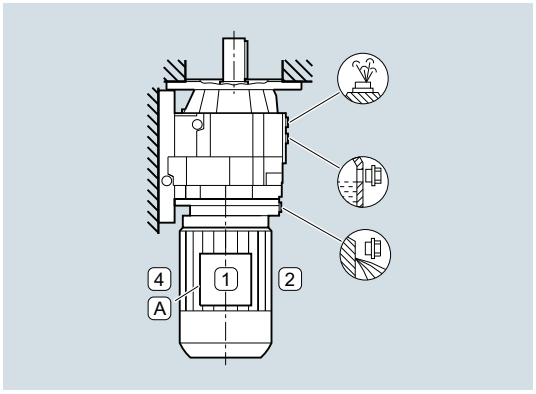

Order code:

M2	**D02**

M3

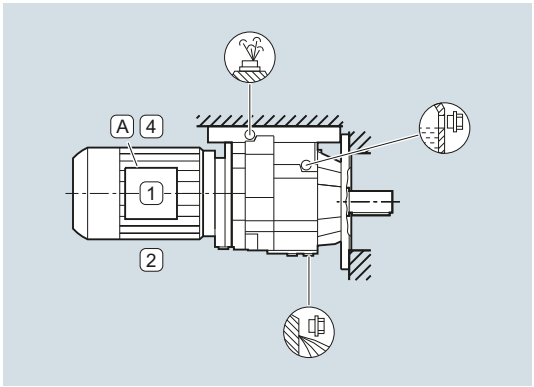

Order code:

M3	**D03**

M4

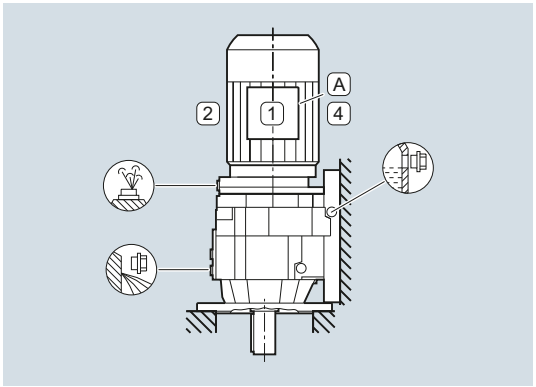

Order code:

M4	**D04**

M5

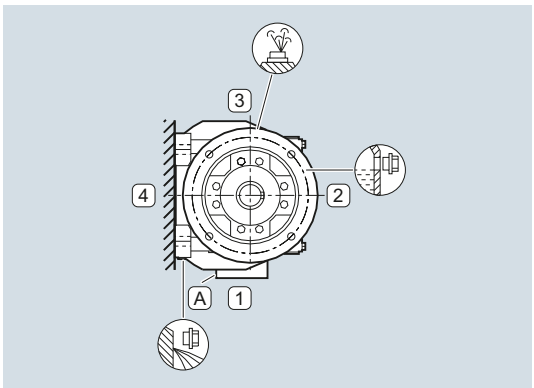

Order code:

M5	**D05**

M6

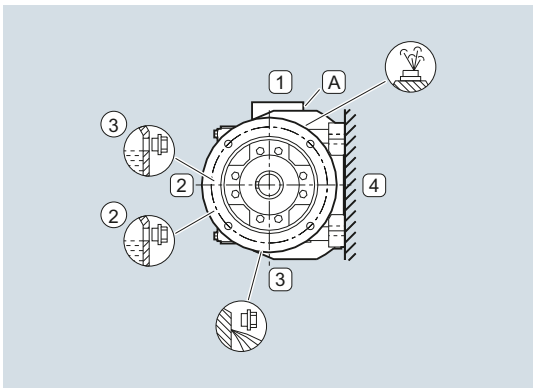

Order code:

M6	**D06**

© Siemens AG 2017

Flange-mounted design or with housing flange

Helical gearboxes ZF and DF or ZZ and DZ, sizes 19 and 29

Oil valves

Sizes 19 and 29 are lubricated for life.

For an explanation of the symbols, see page 10/3.

M1

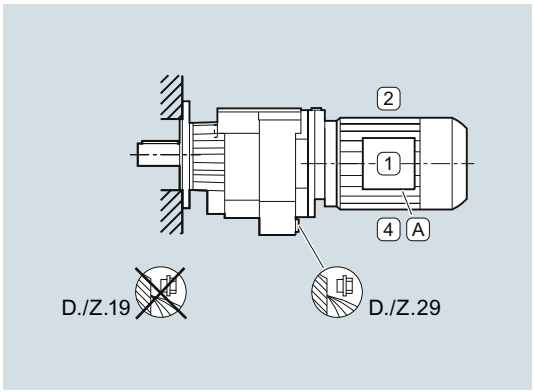

Order code:

M1 **D01**

M2

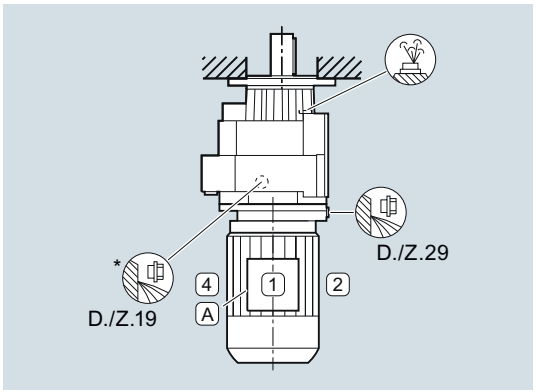

Order code:

M2 **D02**

M3

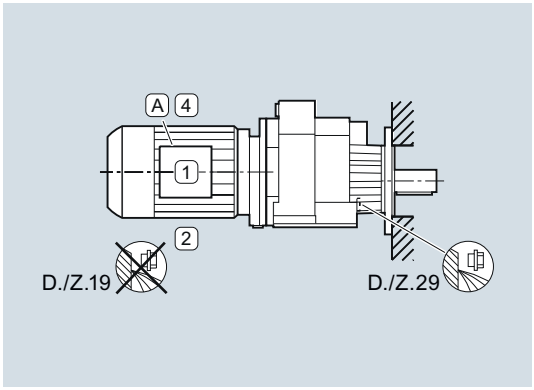

Order code:

M3 **D03**

M4

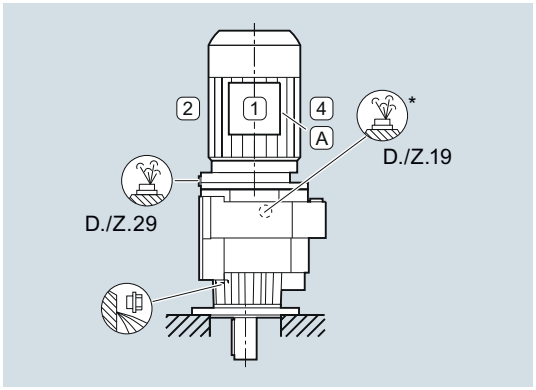

Order code:

M4 **D04**

M5

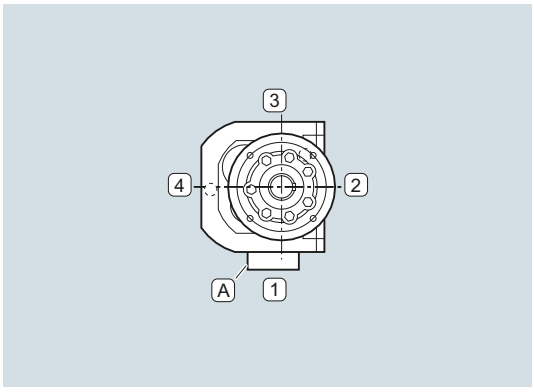

Order code:

M5 **D05**

M6

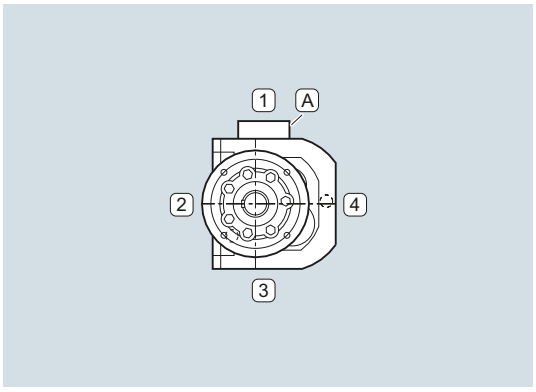

Order code:

M6 **D06**

10

© Siemens AG 2017

Flange-mounted design or with housing flange (continued)

Helical gearboxes ZF and DF or ZZ and DZ, size 39

Oil valves

For an explanation of the symbols, see page 10/3.

M1

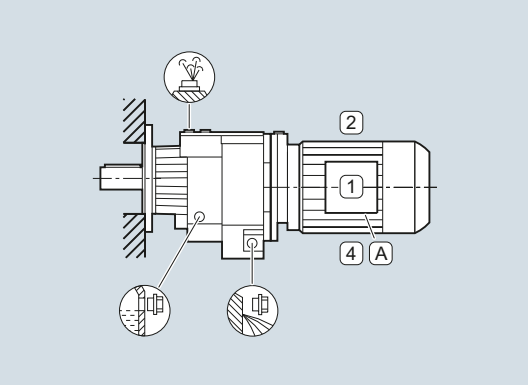

Order code:

M1	**D01**

M2

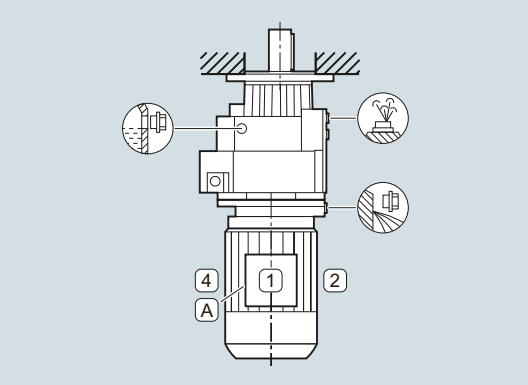

Order code:

M2	**D02**

M3

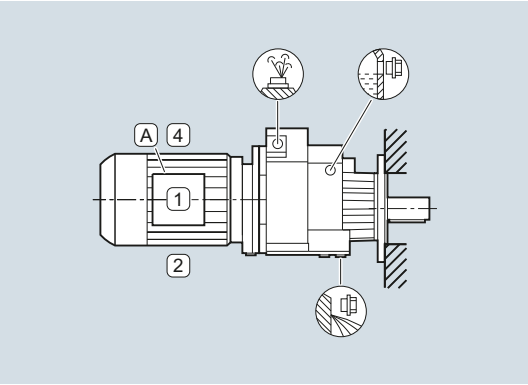

Order code:

M3	**D03**

M4

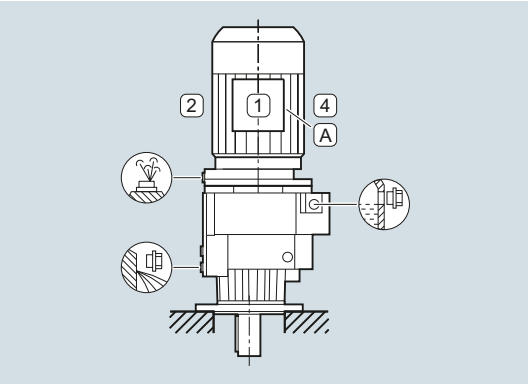

Order code:

M4	**D04**

M5

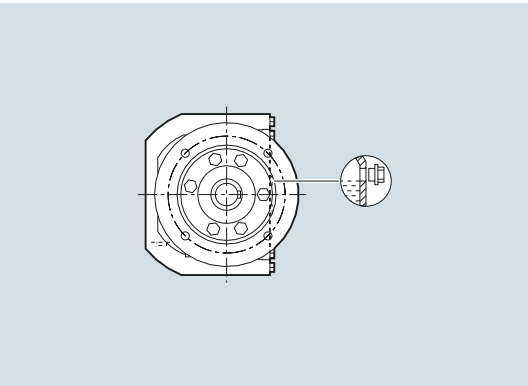

Order code:

M5	**D05**

M6

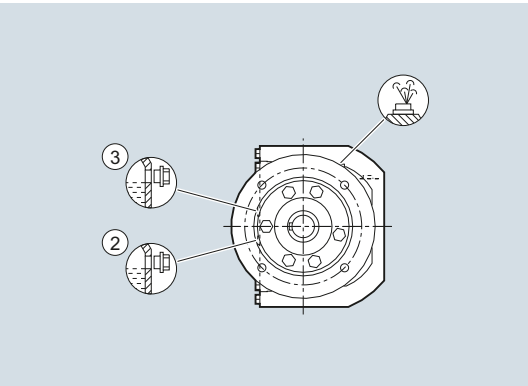

Order code:

M6	**D06**

© Siemens AG 2017

Flange-mounted design or with housing flange (continued)

Helical gearboxes ZF and DF, sizes 49 to 189, or ZZ and DZ, sizes 49 to 129

Oil valves

For an explanation of the symbols, see page 10/3.

M1

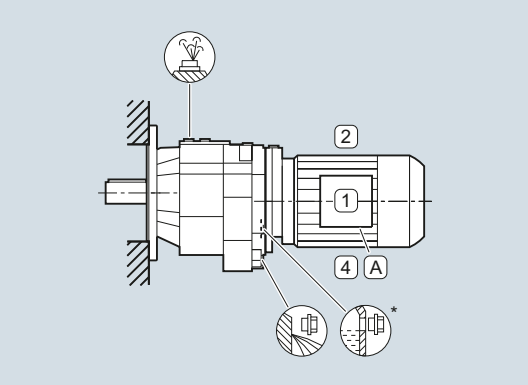

Order code:

M1 **D01**

M2

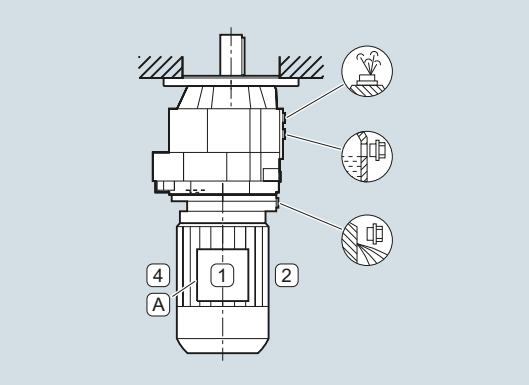

Order code:

M2 **D02**

M3

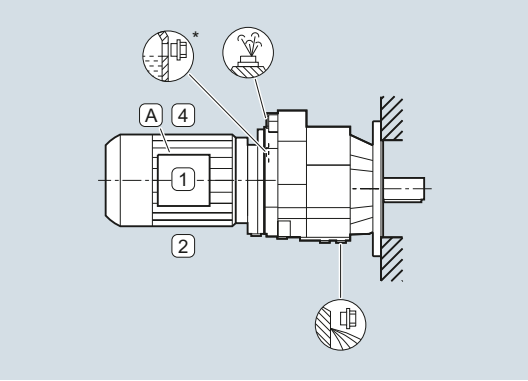

Order code:

M3 **D03**

M4

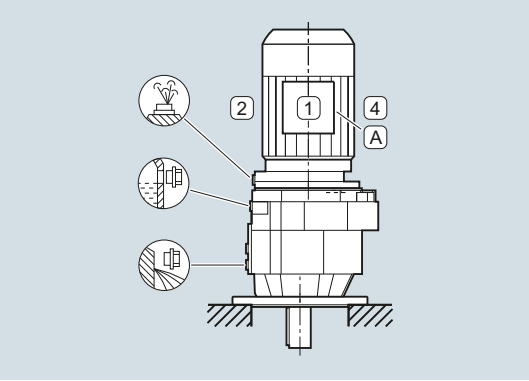

Order code:

M4 **D04**

M5

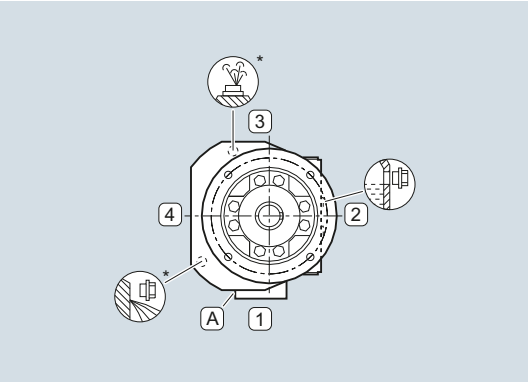

Order code:

M5 **D05**

M6

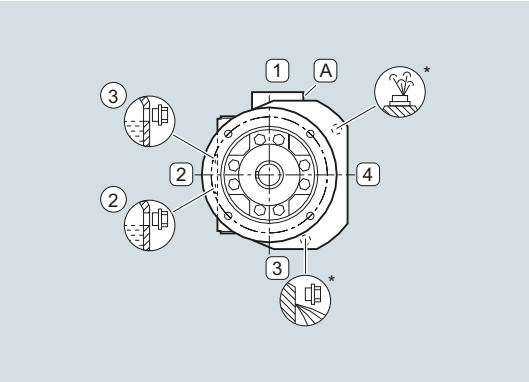

Order code:

M6 **D06**

© Siemens AG 2017

Flange-mounted design or with housing flange (continued)

Helical gearboxes EF, sizes 39 to 149

Oil valves

For an explanation of the symbols, see page 10/3.

M1

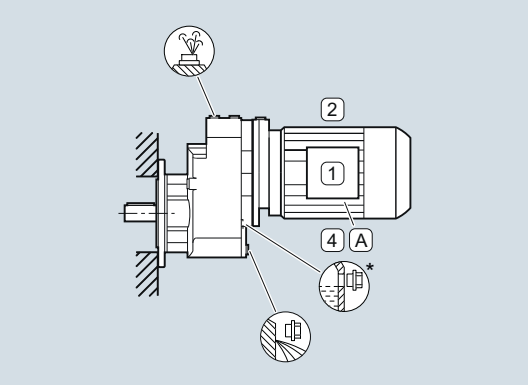

Order code:

M1 **D01**

M2

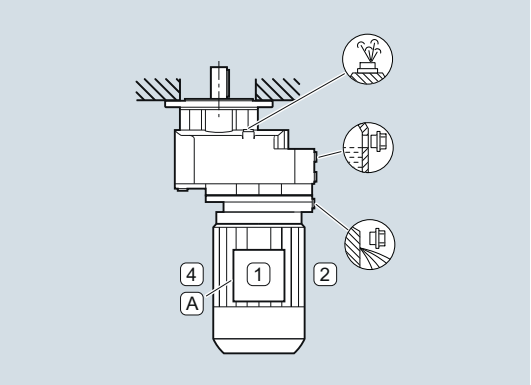

Order code:

M2 **D02**

M3

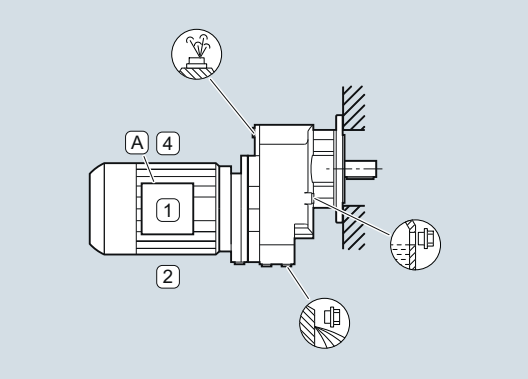

Order code:

M3 **D03**

M4

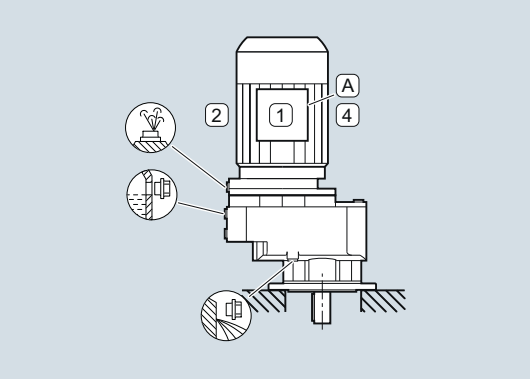

Order code:

M4 **D04**

M5

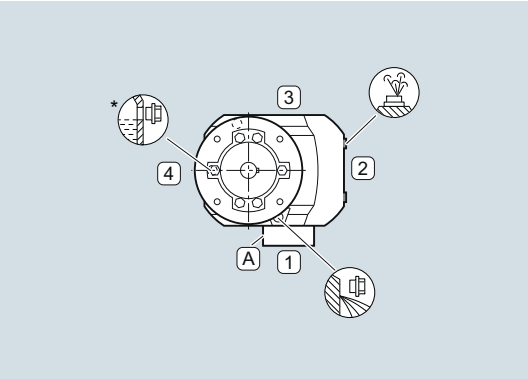

Order code:

M5 **D05**

M6

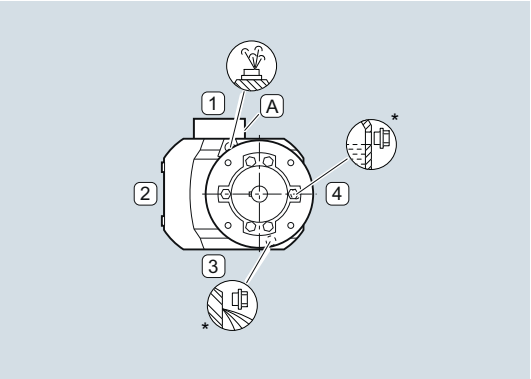

Order code:

M6 **D06**

© Siemens AG 2017

Shaft-mounted design

Parallel shaft gearboxes F.AD, size 29

Oil valves

Size 29 is lubricated for life.

For an explanation of the symbols, see page 10/3.

M1

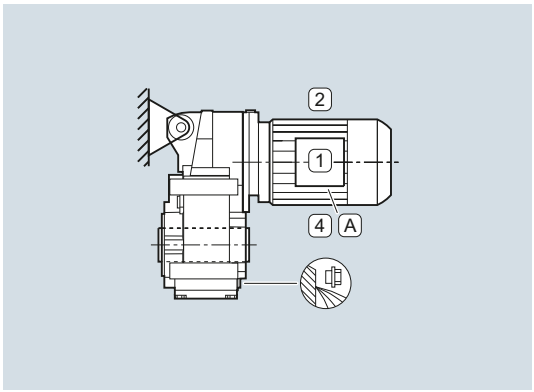

Order code:

M1 **D01**

M2

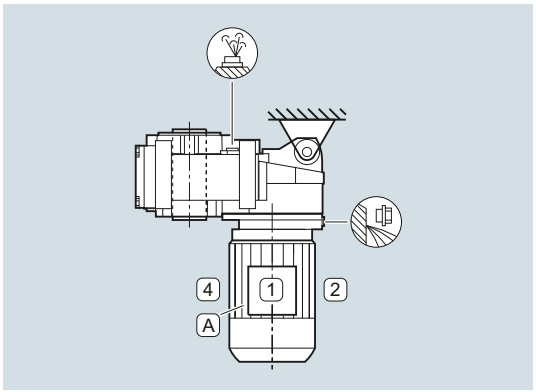

Order code:

M2 **D02**

M3

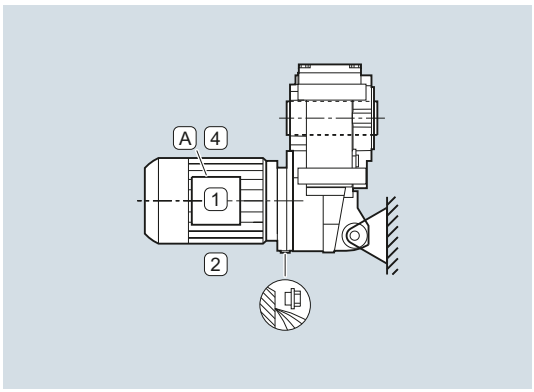

Order code:

M3 **D03**

M4

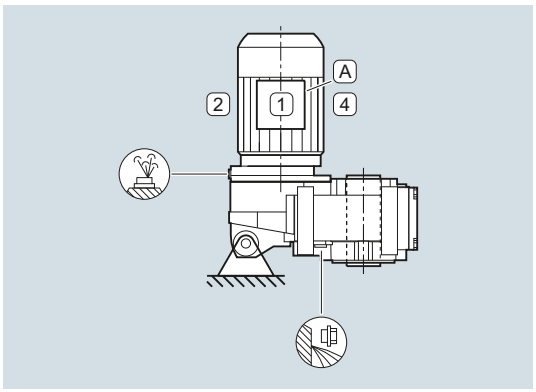

Order code:

M4 **D04**

M5

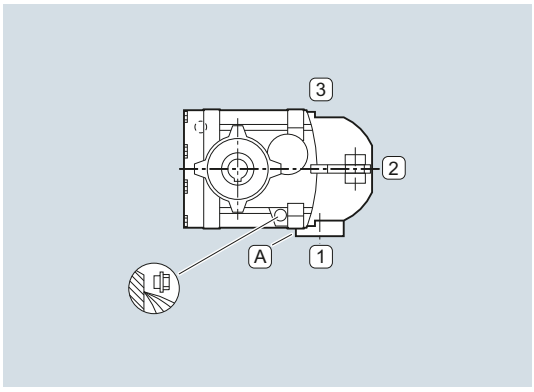

Order code:

M5 **D05**

M6

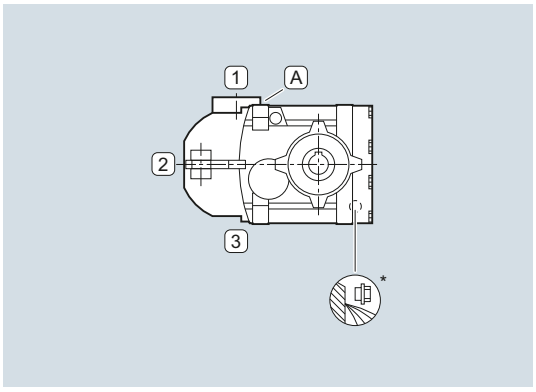

Order code:

M6 **D06**

© Siemens AG 2017

Shaft-mounted design (continued)

Parallel shaft gearboxes F.AD, sizes 39 to 189

Oil valves

For an explanation of the symbols, see page 10/3.

M1

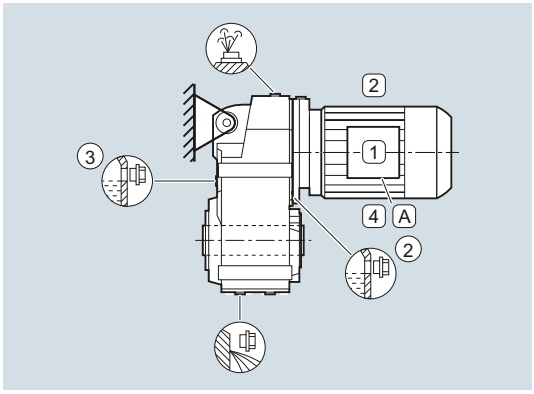

Order code:

M1 **D01**

M2

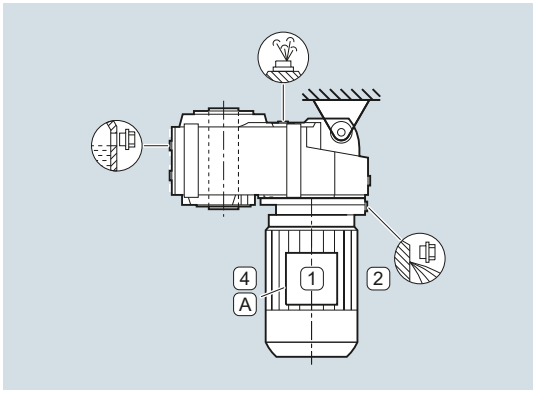

Order code:

M2 **D02**

M3

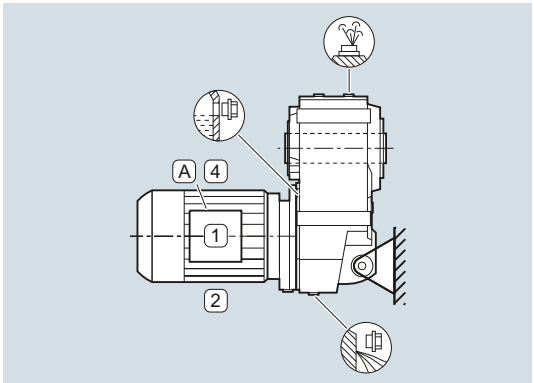

Order code:

M3 **D03**

M4

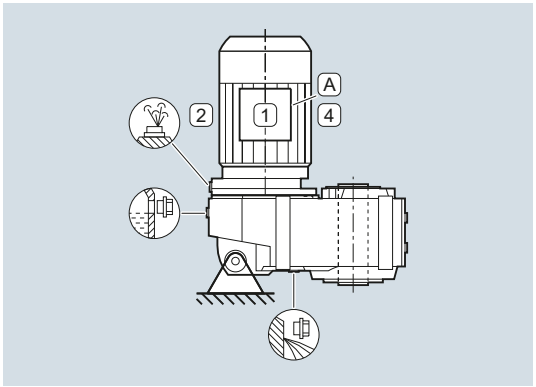

Order code:

M4 **D04**

M5

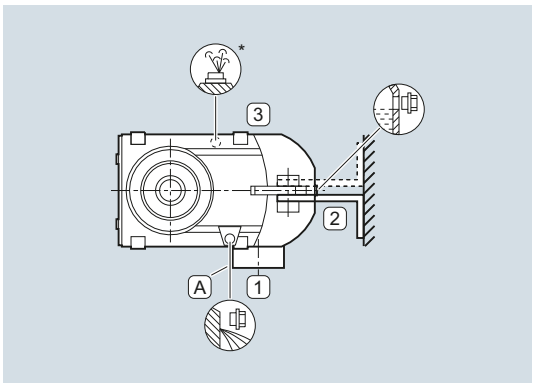

Order code:

M5 **D05**

M6

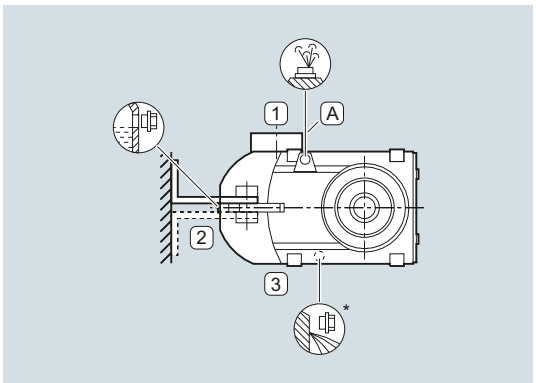

Order code:

M6 **D06**

© Siemens AG 2017

Flange-mounted design or with housing flange

Parallel shaft gearboxes F..F or F..Z, size 29

Oil valves

Size 29 is lubricated for life.

For an explanation of the symbols, see page 10/3.

M1

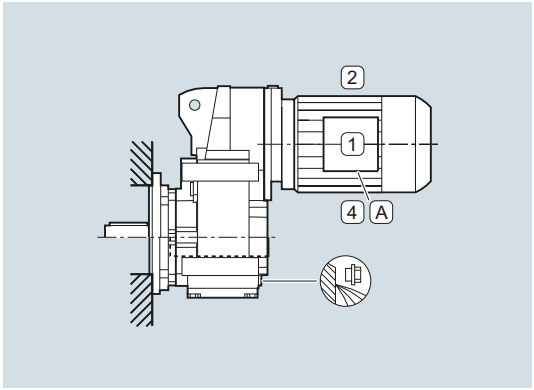

Order code:

M1 **D01**

M2

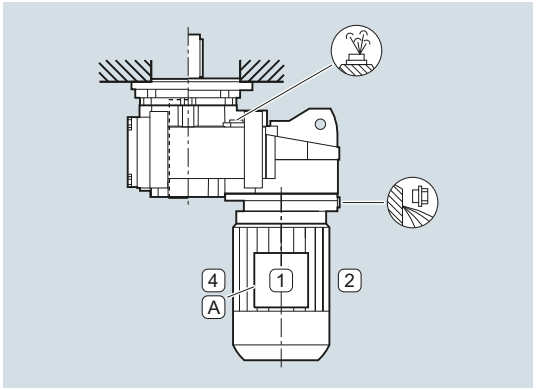

Order code:

M2 **D02**

M3

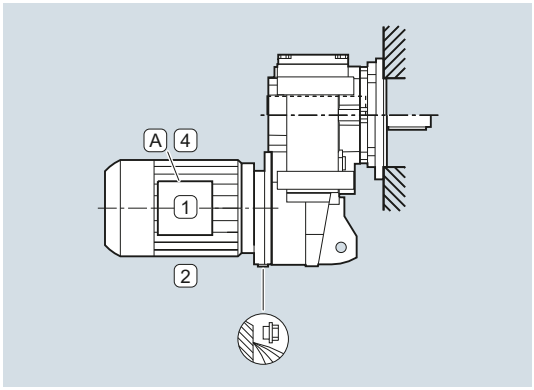

Order code:

M3 **D03**

M4

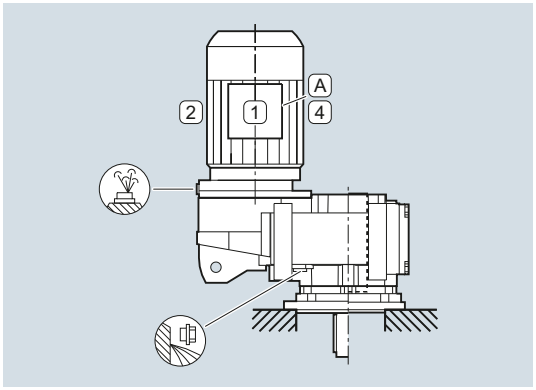

Order code:

M4 **D04**

M5

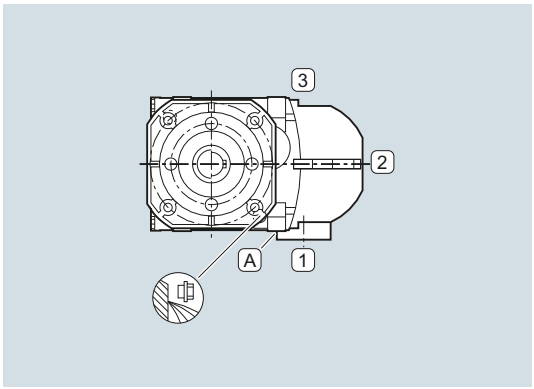

Order code:

M5 **D05**

M6

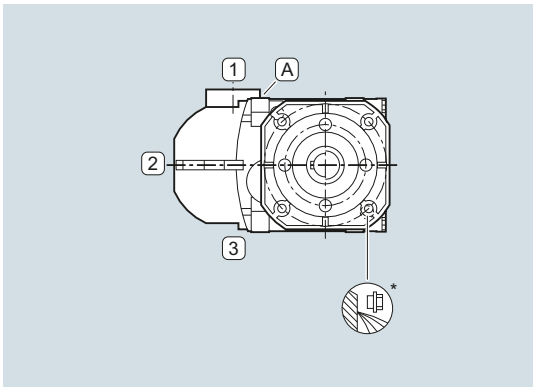

Order code:

M6 **D06**

© Siemens AG 2017

Flange-mounted design or with housing flange (continued)

Parallel shaft gearboxes F..F or F..Z, sizes 39 to 189

Oil valves

For an explanation of the symbols, see page 10/3.

M1

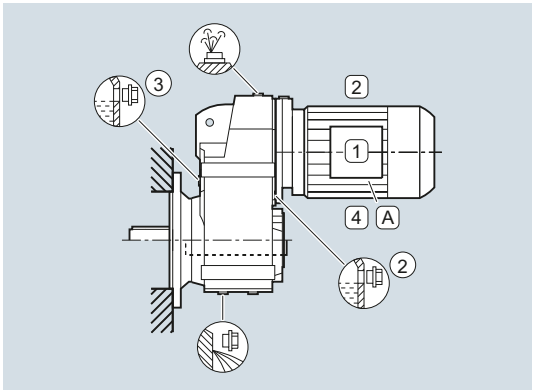

Order code:

M1	**D01**

M2

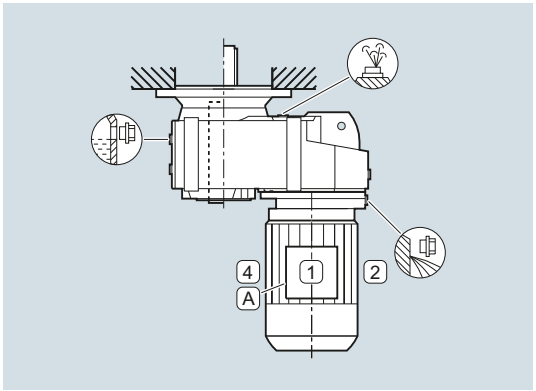

Order code:

M2	**D02**

M3

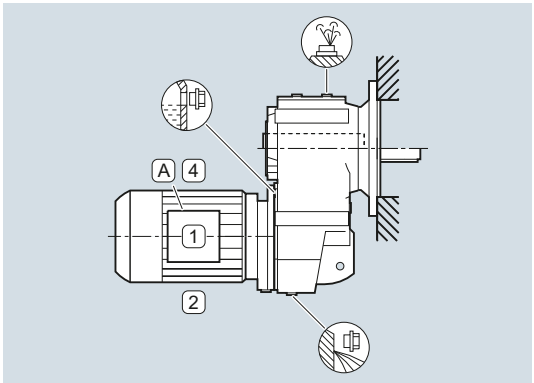

Order code:

M3	**D03**

M4

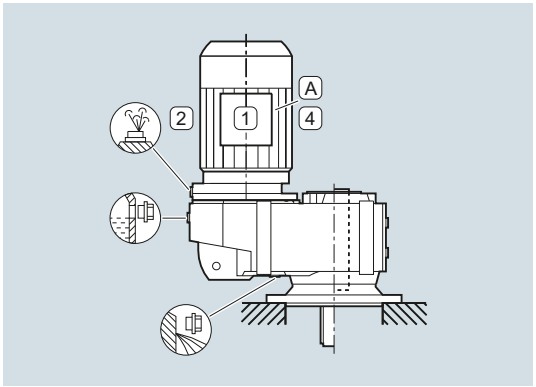

Order code:

M4	**D04**

M5

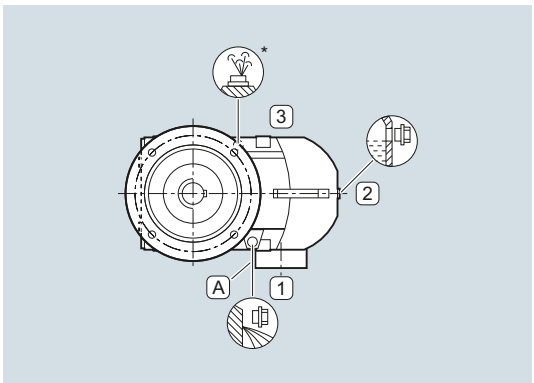

Order code:

M5	**D05**

M6

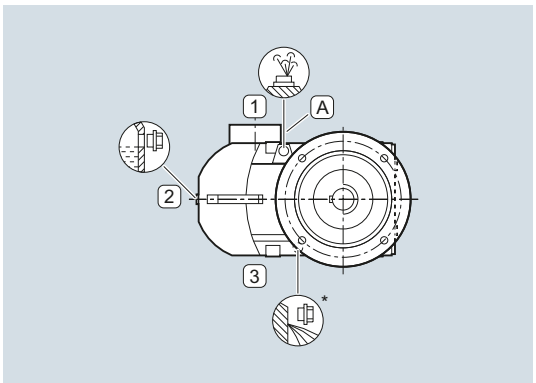

Order code:

M6	**D06**

© Siemens AG 2017

Foot-mounted design

Parallel shaft gearbox F, size 29

Oil valves

For an explanation of the symbols, see page 10/3.

M1

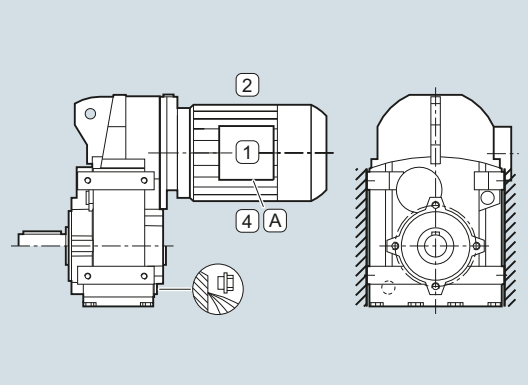

Order code:

M1 **D01**

M2

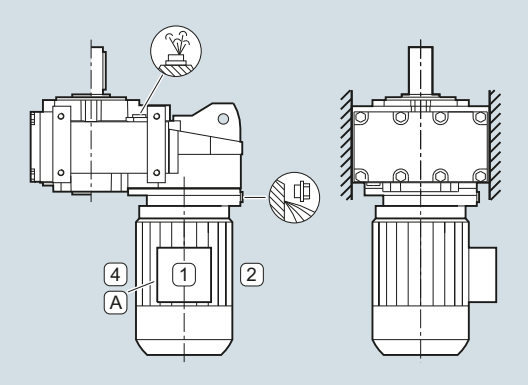

Order code:

M2 **D02**

M3

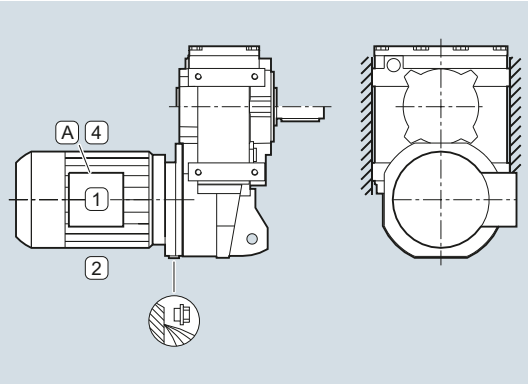

Order code:

M3 **D03**

M4

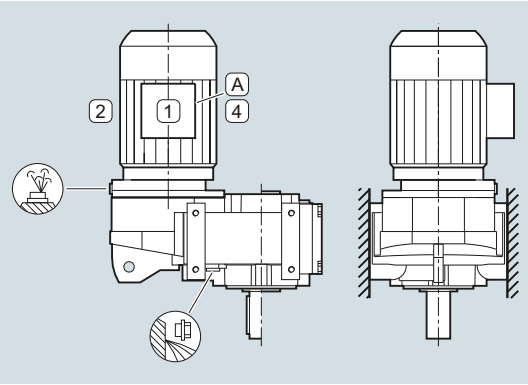

Order code:

M4 **D04**

M5

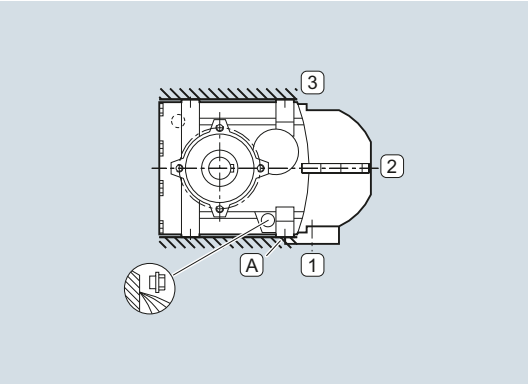

Order code:

M5 **D05**

M6

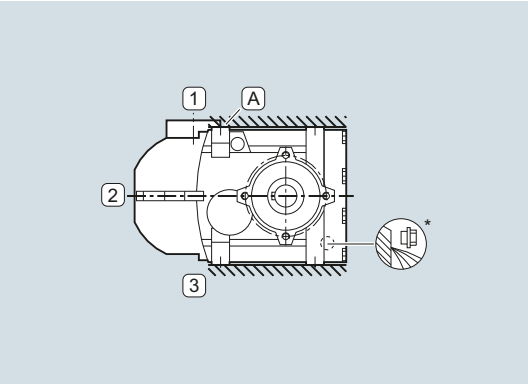

Order code:

M6 **D06**

© Siemens AG 2017

Foot-mounted design (continued)

Parallel shaft gearbox F, sizes 39 to 189

Oil valves

For an explanation of the symbols, see page 10/3.

M1

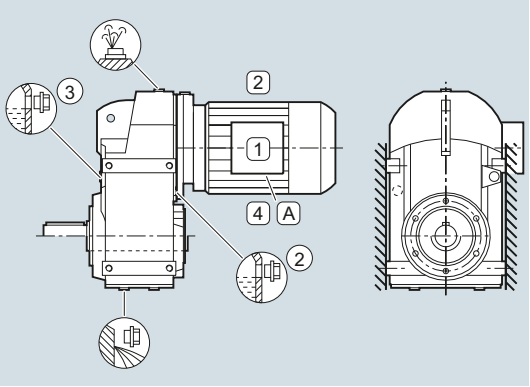

Order code:

M1 **D01**

M2

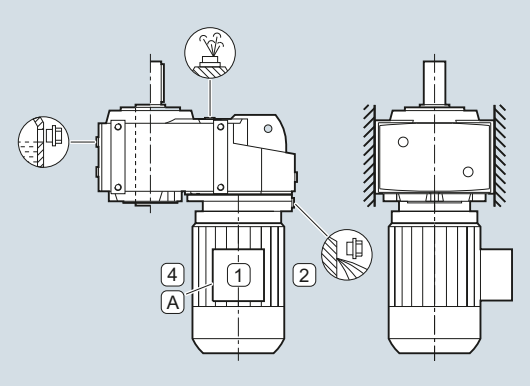

Order code:

M2 **D02**

M3

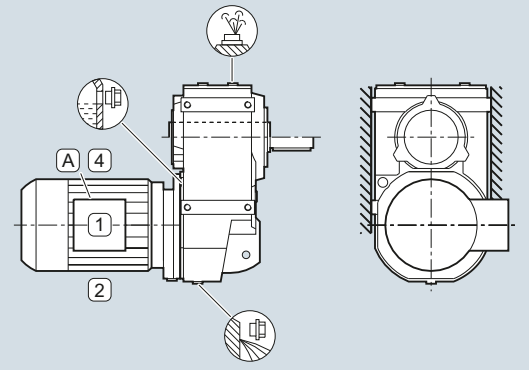

Order code:

M3 **D03**

M4

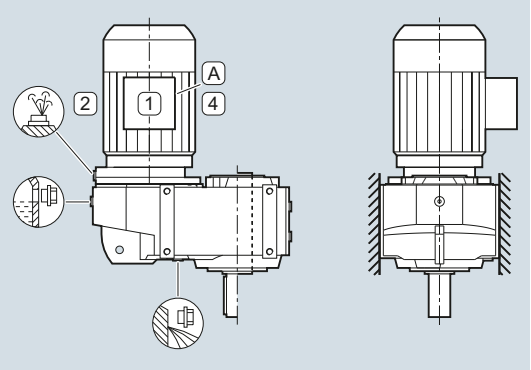

Order code:

M4 **D04**

M5

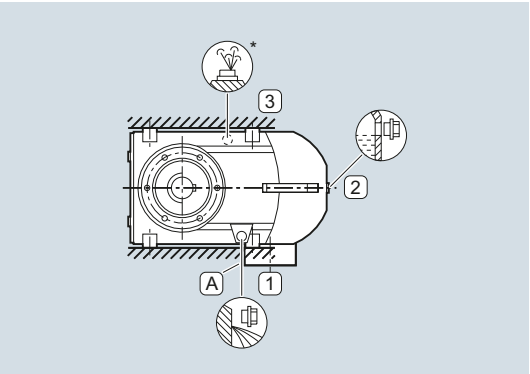

Order code:

M5 **D05**

M6

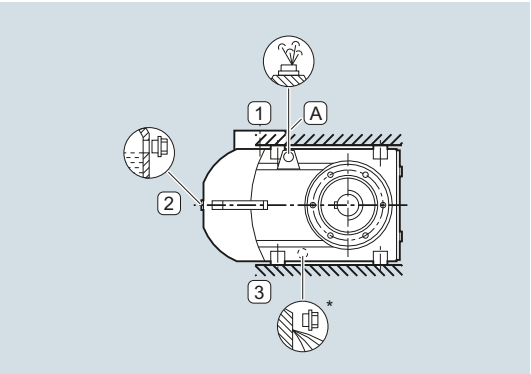

Order code:

M6 **D06**

© Siemens AG 2017

Foot-mounted design

Bevel gearboxes B, sizes 19 and 29

Oil valves

Sizes 19 and 29 are lubricated for life.

For an explanation of the symbols, see page 10/3.

M1

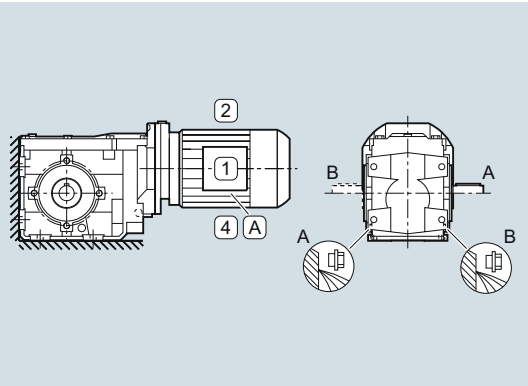

Order code:	
M1 output side A	**D11**
M1 output side B	**D21**

M2

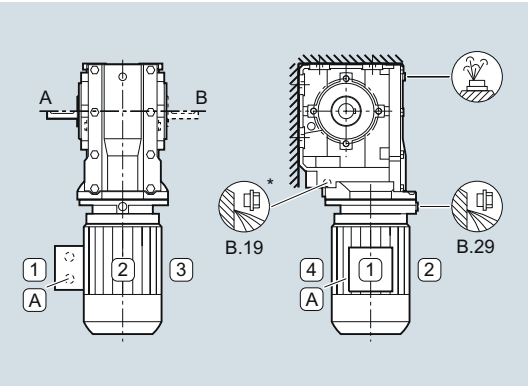

Order code:	
M2 output side A	**D12**
M2 output side B	**D22**

M3

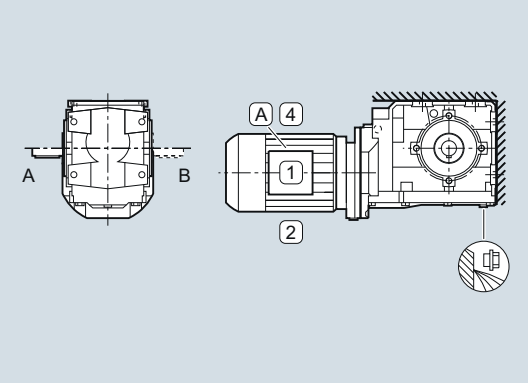

Order code:	
M3 output side A	**D13**
M3 output side B	**D23**

M4

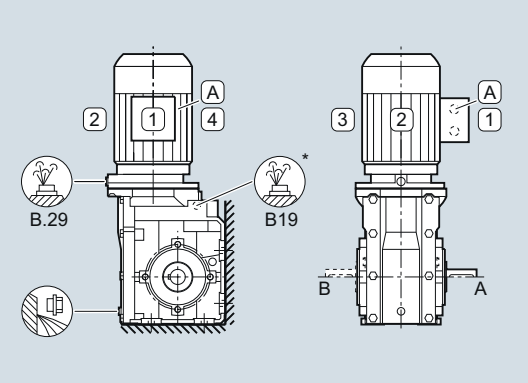

Order code:	
M4 output side A	**D14**
M4 output side B	**D24**

M5

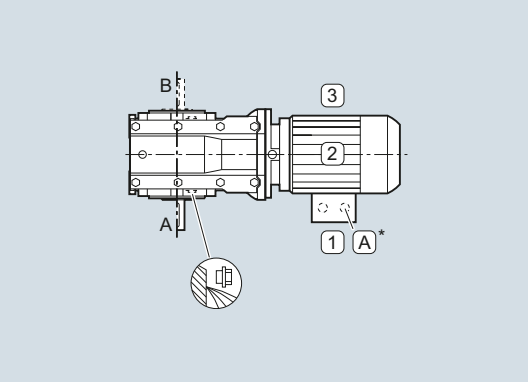

Order code:	
M5 output side A	**D15**
M5 output side B	**D25**

M6

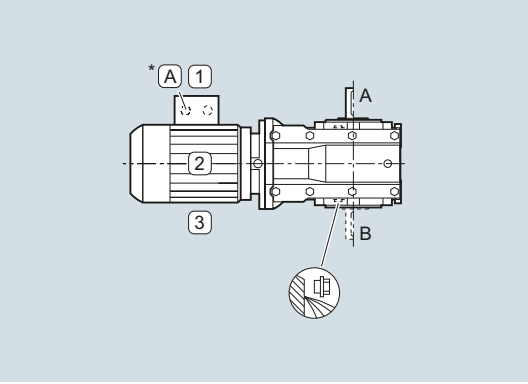

Order code:	
M6 output side A	**D16**
M6 output side B	**D26**

© Siemens AG 2017

Foot-mounted design (continued)

Bevel gearboxes B, sizes 39 and 49

Oil valves

For an explanation of the symbols, see page 10/3.

M1

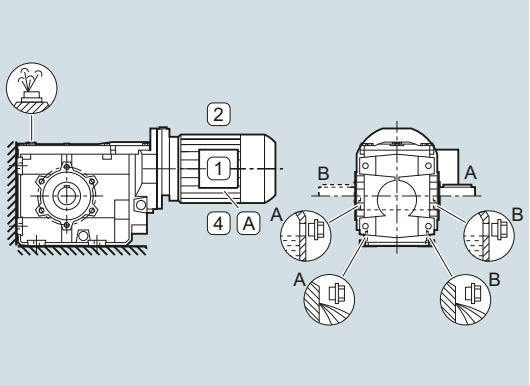

Order code:	
M1 output side A	**D11**
M1 output side B	**D21**

M2

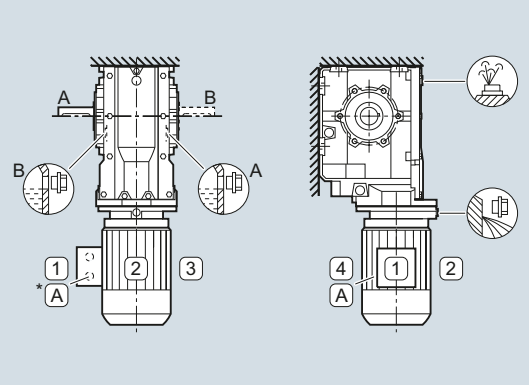

Order code:	
M2 output side A	**D12**
M2 output side B	**D22**

M3

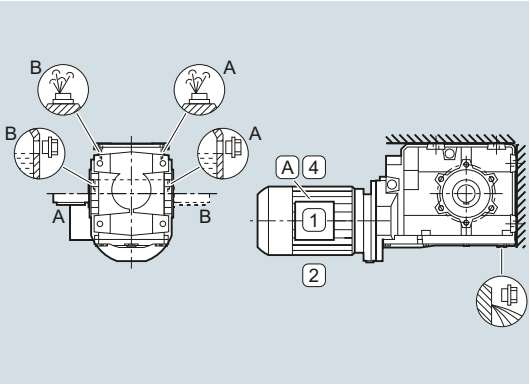

Order code:	
M3 output side A	**D13**
M3 output side B	**D23**

M4

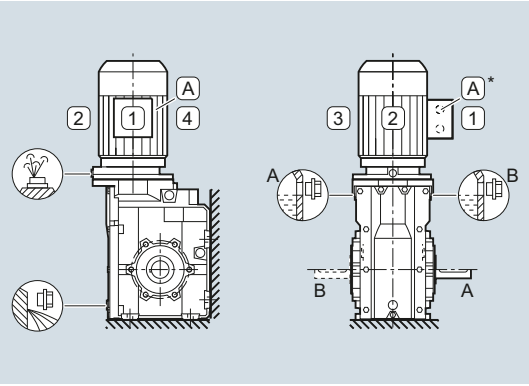

Order code:	
M4 output side A	**D14**
M4 output side B	**D24**

M5

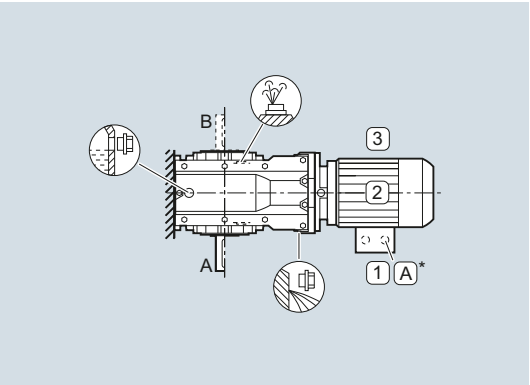

Order code:	
M5 output side A	**D15**
M5 output side B	**D25**

M6

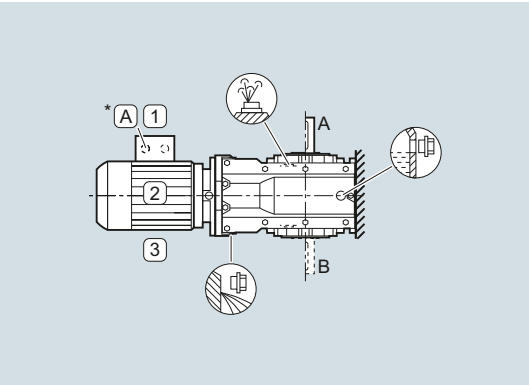

Order code:	
M6 output side A	**D16**
M6 output side B	**D26**

© Siemens AG 2017

Housing flange design and flange-mounted design

Bevel gearboxes B.Z and B.F, sizes 19 and 29

Oil valves

Sizes 19 and 29 are lubricated for life.

For an explanation of the symbols, see page 10/3.

M1

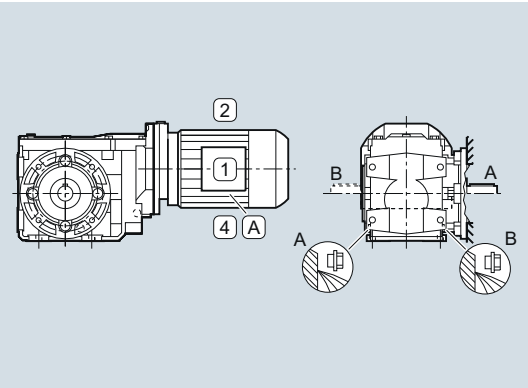

Order code:	
M1 output side A	**D11**
M1 output side B	**D21**

M2

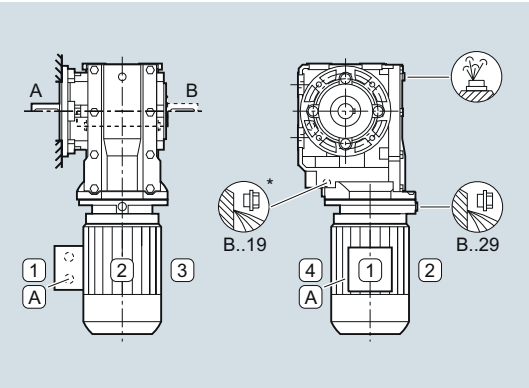

Order code:	
M2 output side A	**D12**
M2 output side B	**D22**

M3

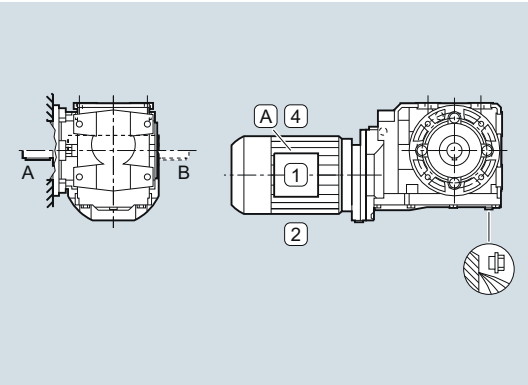

Order code:	
M3 output side A	**D13**
M3 output side B	**D23**

M4

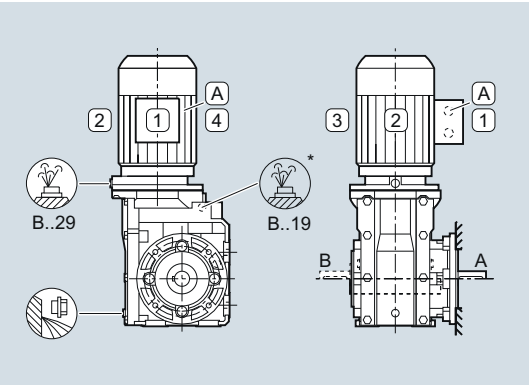

Order code:	
M4 output side A	**D14**
M4 output side B	**D24**

M5

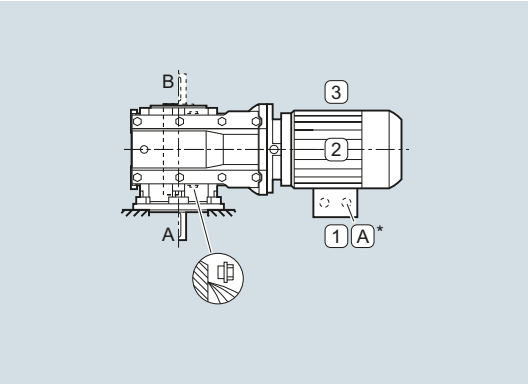

Order code:	
M5 output side A	**D15**
M5 output side B	**D25**

M6

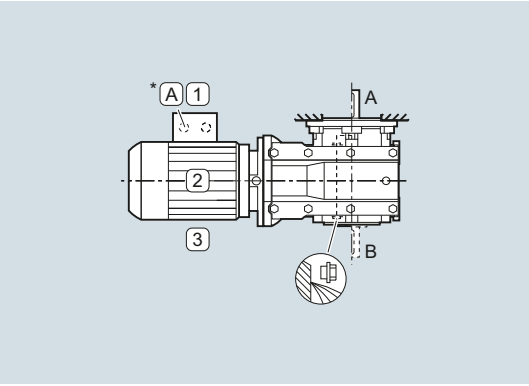

Order code:	
M6 output side A	**D16**
M6 output side B	**D26**

© Siemens AG 2017

Housing flange design and flange-mounted design (continued)

Bevel gearboxes B.Z and B.F, sizes 39 and 49

Oil valves

For an explanation of the symbols, see page 10/3.

M1

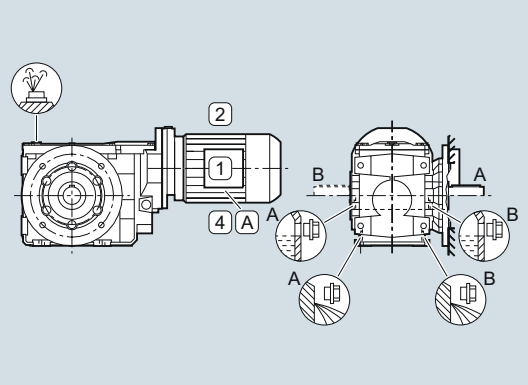

Order code:	
M1 output side A	**D11**
M1 output side B	**D21**

M2

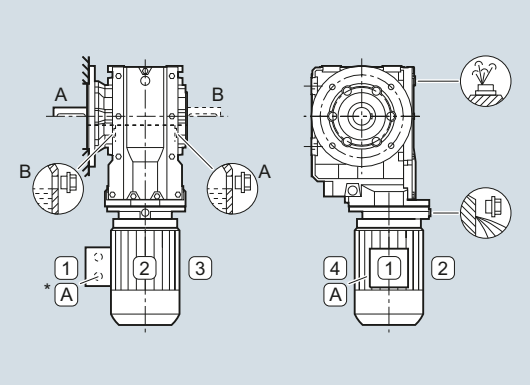

Order code:	
M2 output side A	**D12**
M2 output side B	**D22**

M3

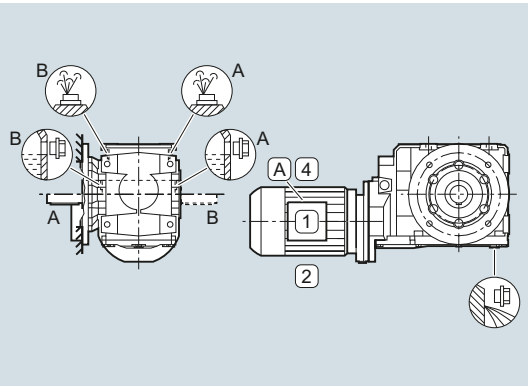

Order code:	
M3 output side A	**D13**
M3 output side B	**D23**

M4

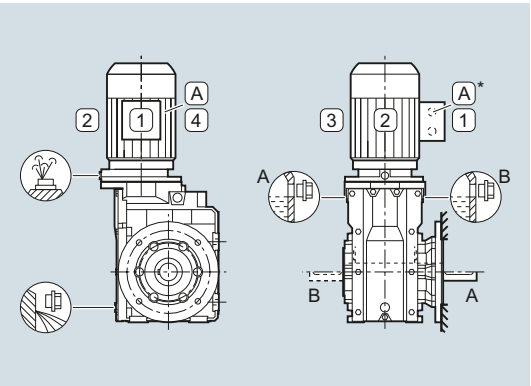

Order code:	
M4 output side A	**D14**
M4 output side B	**D24**

M5

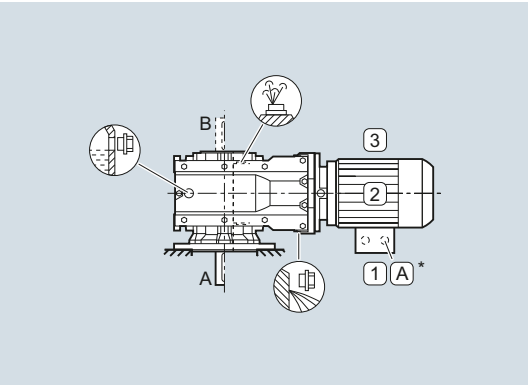

Order code:	
M5 output side A	**D15**
M5 output side B	**D25**

M6

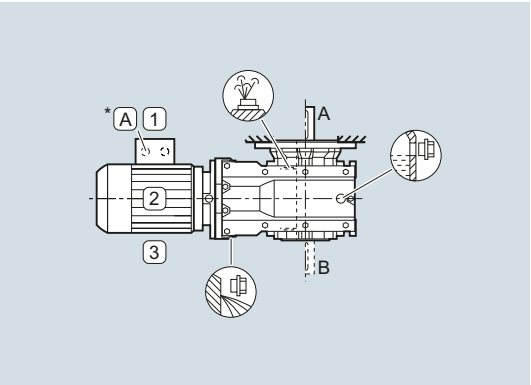

Order code:	
M6 output side A	**D16**
M6 output side B	**D26**

© Siemens AG 2017

Shaft-mounted design

Bevel gearboxes BAD, sizes 19 and 29

Oil valves

Sizes 19 and 29 are lubricated for life.

For an explanation of the symbols, see page 10/3.

M1

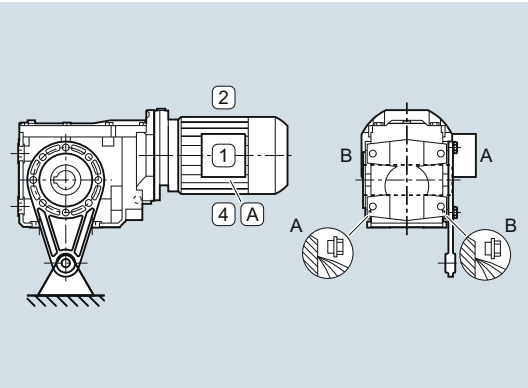

Order code:	
M1 output side A	**D11**
M1 output side B	**D21**

M2

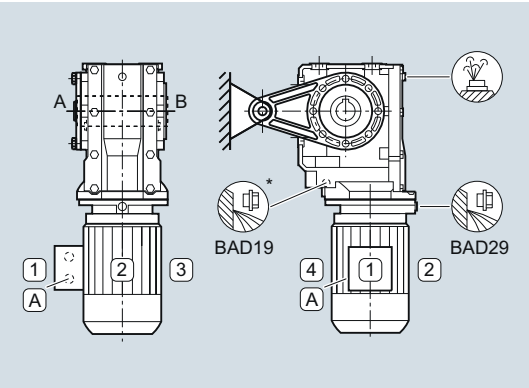

Order code:	
M2 output side A	**D12**
M2 output side B	**D22**

M3

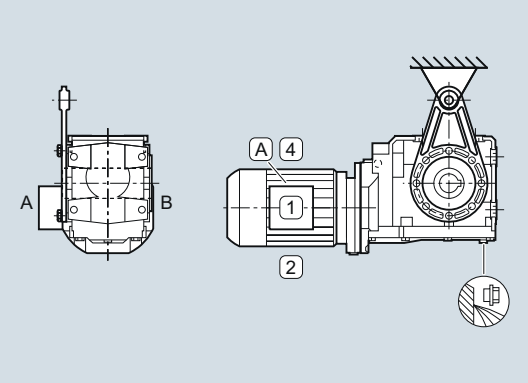

Order code:	
M3 output side A	**D13**
M3 output side B	**D23**

M4

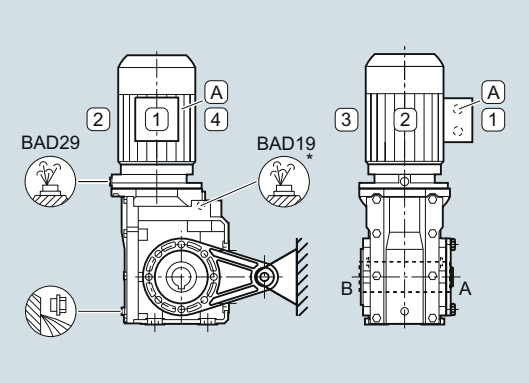

Order code:	
M4 output side A	**D14**
M4 output side B	**D24**

M5

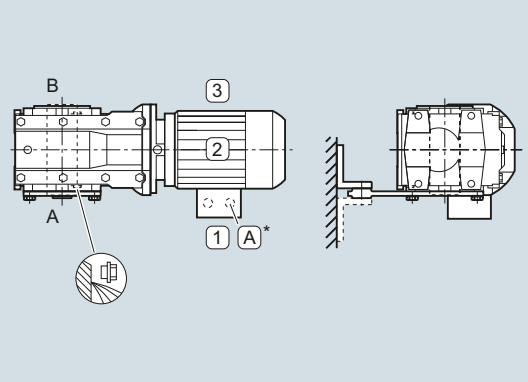

Order code:	
M5 output side A	**D15**
M5 output side B	**D25**

M6

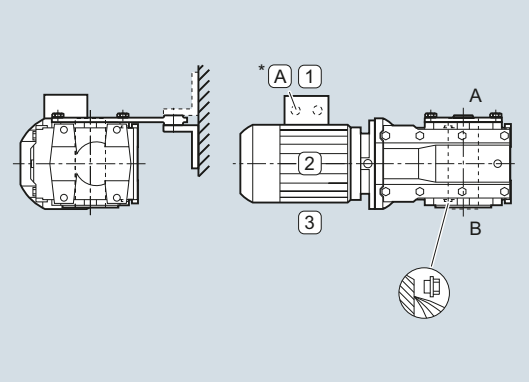

Order code:	
M6 output side A	**D16**
M6 output side B	**D26**

© Siemens AG 2017

Shaft-mounted design (continued)

Bevel gearboxes BAD, sizes 39 and 49

Oil valves

For an explanation of the symbols, see page 10/3.

M1

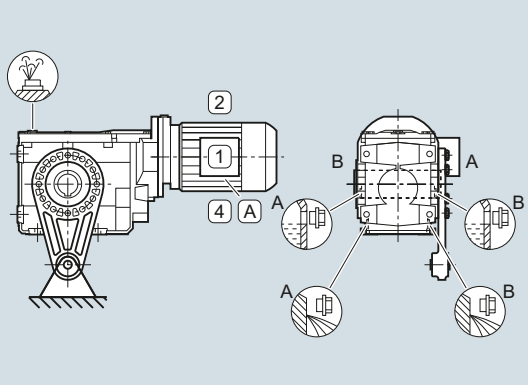

Order code:	
M1 output side A	**D11**
M1 output side B	**D21**

M2

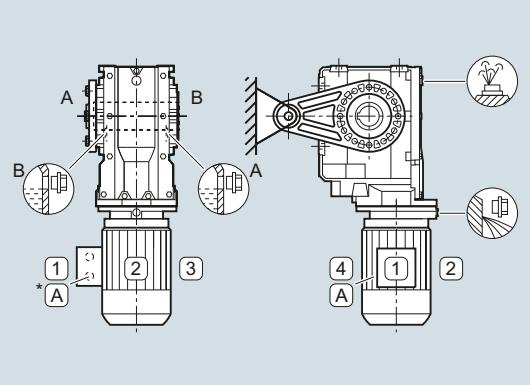

Order code:	
M2 output side A	**D12**
M2 output side B	**D22**

M3

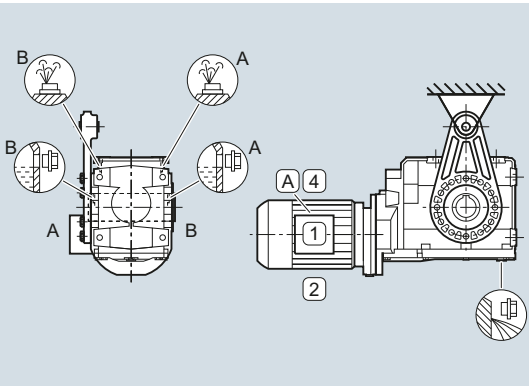

Order code:	
M3 output side A	**D13**
M3 output side B	**D23**

M4

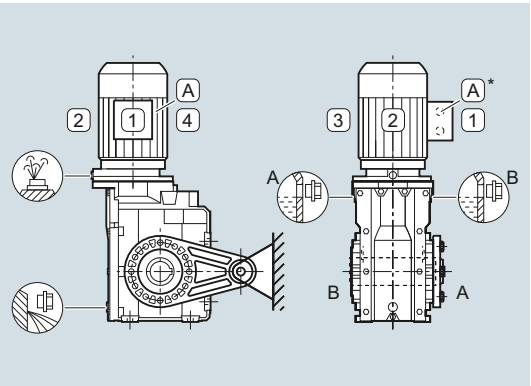

Order code:	
M4 output side A	**D14**
M4 output side B	**D24**

M5

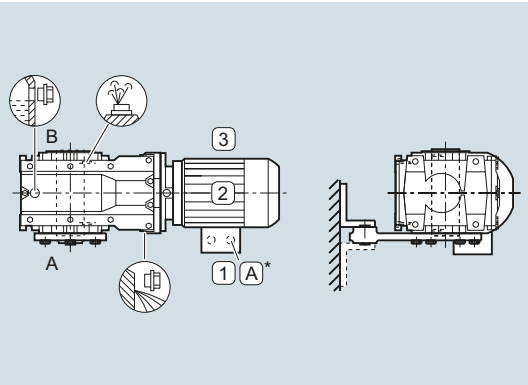

Order code:	
M5 output side A	**D15**
M5 output side B	**D25**

M6

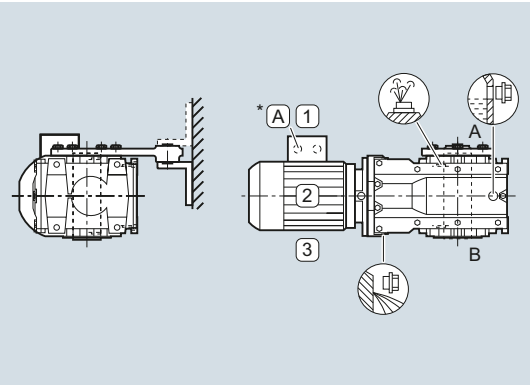

Order code:	
M6 output side A	**D16**
M6 output side B	**D26**

© Siemens AG 2017

Foot-mounted design

Bevel gearboxes K, sizes 39 to 189

Oil valves

For an explanation of the symbols, see page 10/3.

M1

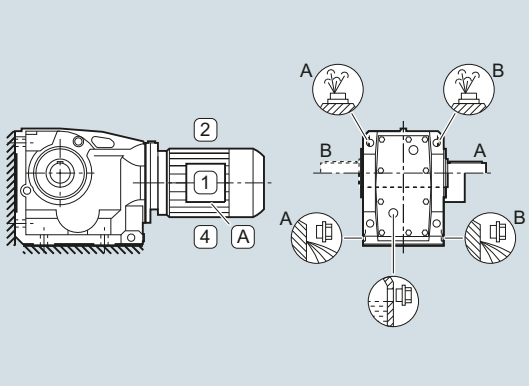

Order code:	
M1 output side A	**D11**
M1 output side B	**D21**

M2

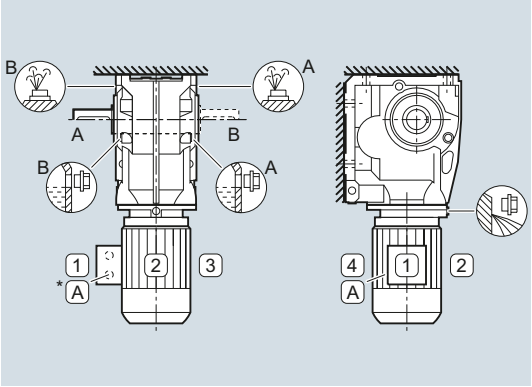

Order code:	
M2 output side A	**D12**
M2 output side B	**D22**

M3

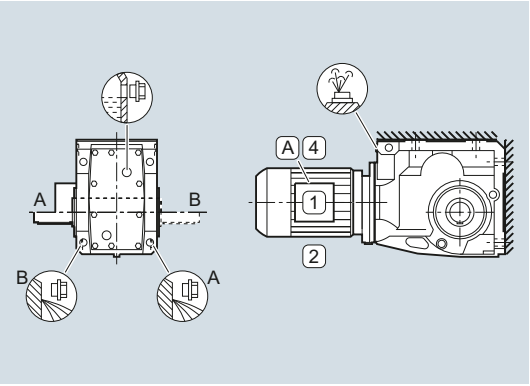

Order code:	
M3 output side A	**D13**
M3 output side B	**D23**

M4

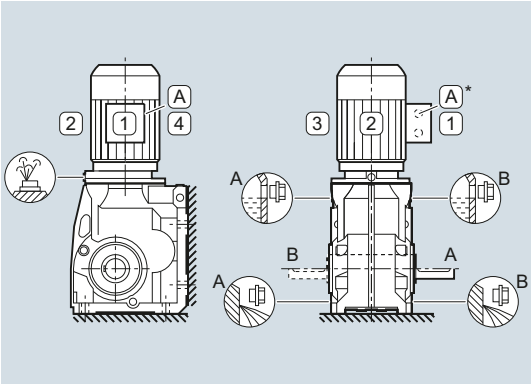

Order code:	
M4 output side A	**D14**
M4 output side B	**D24**

M5

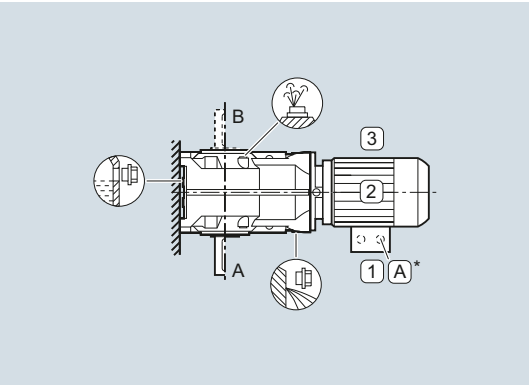

Order code:	
M5 output side A	**D15**
M5 output side B	**D25**

M6

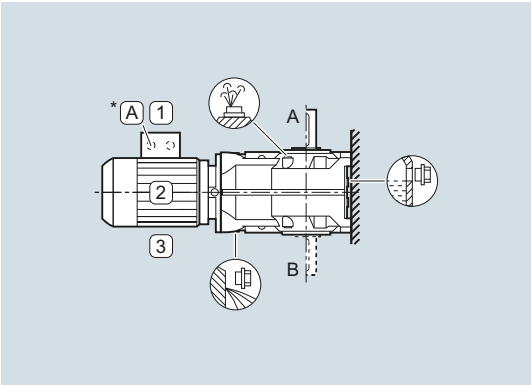

Order code:	
M6 output side A	**D16**
M6 output side B	**D26**

© Siemens AG 2017

Housing flange design and flange-mounted design

Bevel gearboxes KAZ and K.F, sizes 39 to 189

Oil valves

For an explanation of the symbols, see page 10/3.

M1

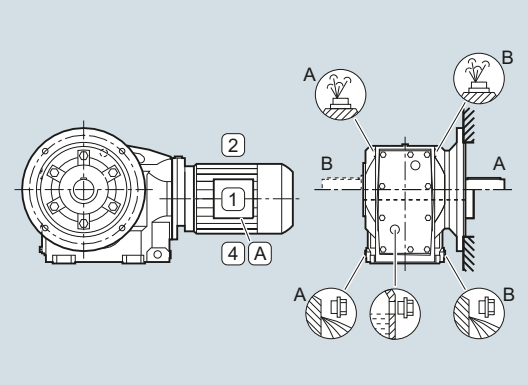

Order code:	
M1 output side A	**D11**
M1 output side B	**D21**

M2

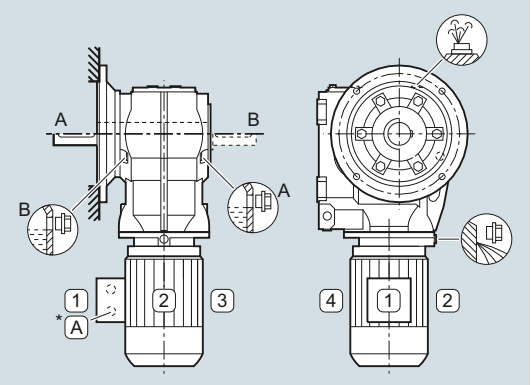

Order code:	
M2 output side A	**D12**
M2 output side B	**D22**

M3

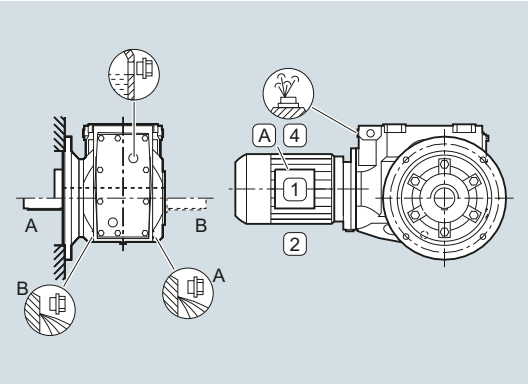

Order code:	
M3 output side A	**D13**
M3 output side B	**D23**

M4

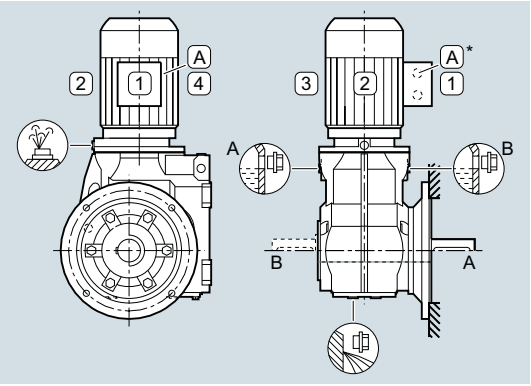

Order code:	
M4 output side A	**D14**
M4 output side B	**D24**

M5

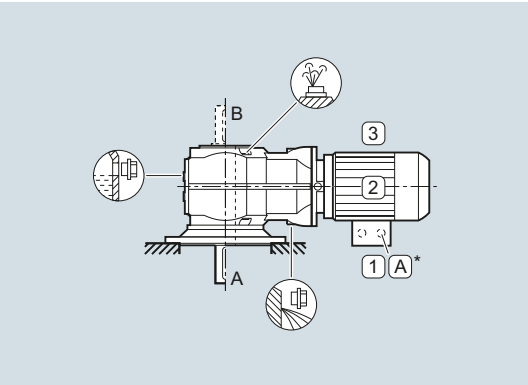

Order code:	
M5 output side A	**D15**
M5 output side B	**D25**

M6

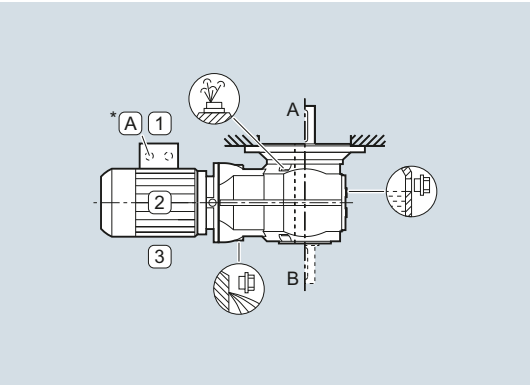

Order code:	
M6 output side A	**D16**
M6 output side B	**D26**

© Siemens AG 2017

Shaft-mounted design

Bevel gearboxes KAD, sizes 39 to 189

Oil valves

For an explanation of the symbols, see page 10/3.

M1

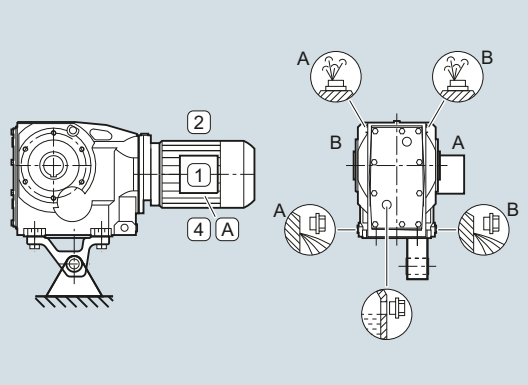

Order code:	
M1 output side A	**D11**
M1 output side B	**D21**

M2

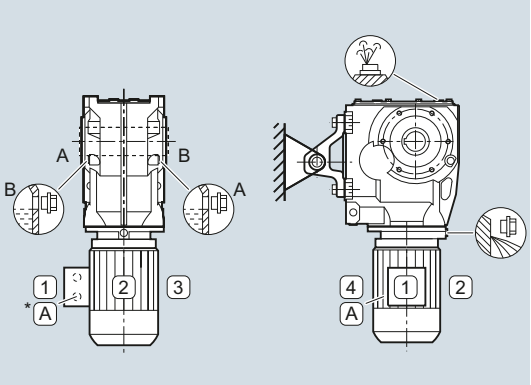

Order code:	
M2 output side A	**D12**
M2 output side B	**D22**

M3

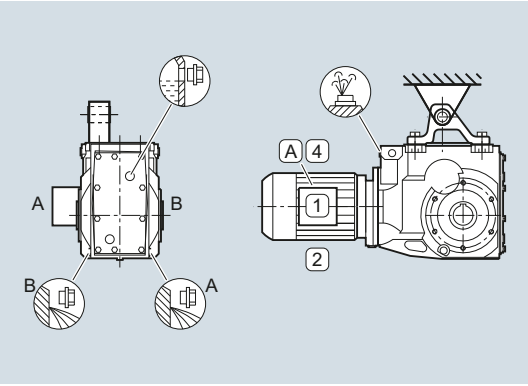

Order code:	
M3 output side A	**D13**
M3 output side B	**D23**

M4

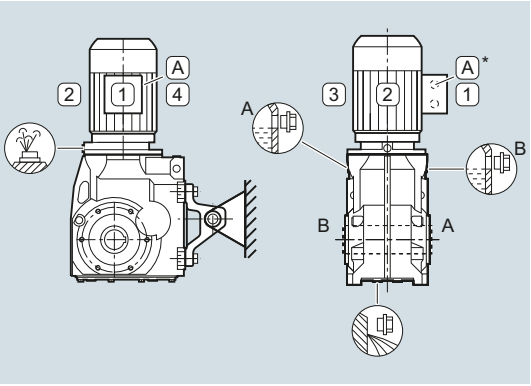

Order code:	
M4 output side A	**D14**
M4 output side B	**D24**

M5

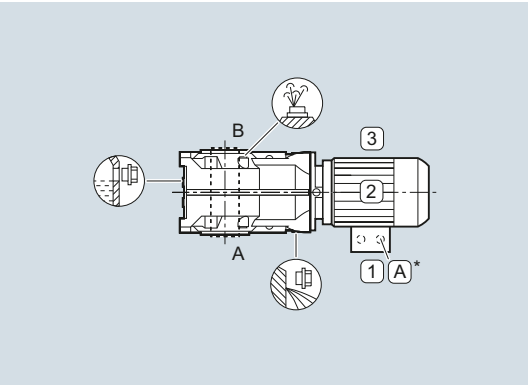

Order code:	
M5 output side A	**D15**
M5 output side B	**D25**

M6

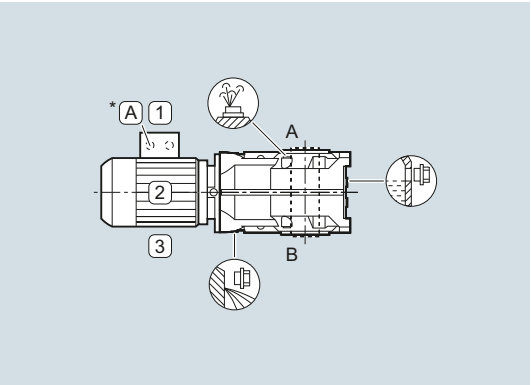

Order code:	
M6 output side A	**D16**
M6 output side B	**D26**

10

© Siemens AG 2017

Shaft-mounted design

Helical worm gearboxes CAD, size 29

Oil valves

Size 29 is lubricated for life.

For an explanation of the symbols, see page 10/3.

M1

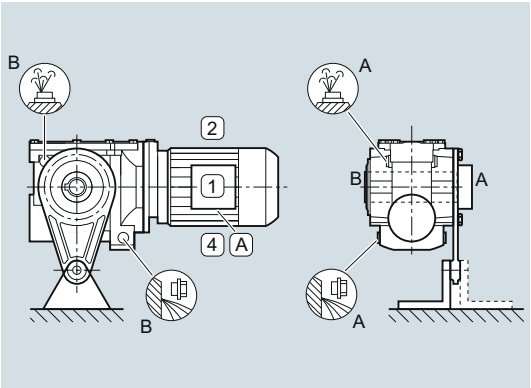

Order code:	
M1 output side A	**D11**
M1 output side B	**D21**

M2

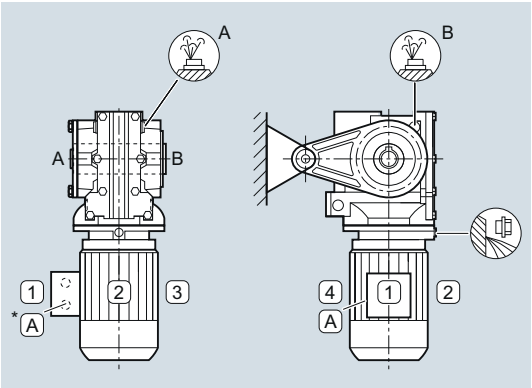

Order code:	
M2 output side A	**D12**
M2 output side B	**D22**

M3

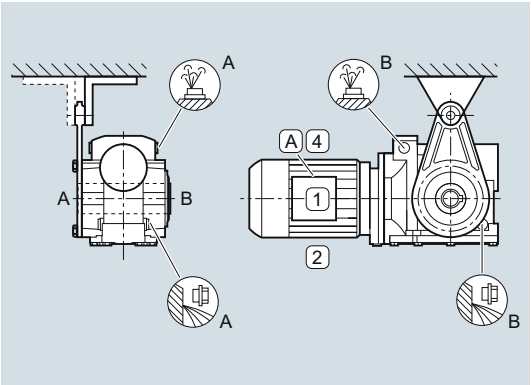

Order code:	
M3 output side A	**D13**
M3 output side B	**D23**

M4

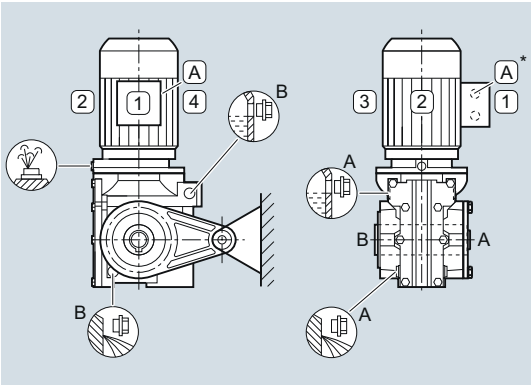

Order code:	
M4 output side A	**D14**
M4 output side B	**D24**

M5

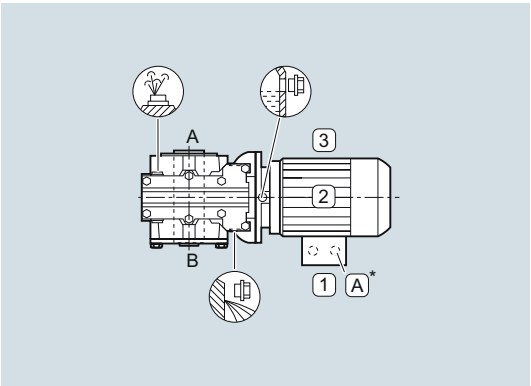

Order code:	
M5 output side A	**D15**
M5 output side B	**D25**

M6

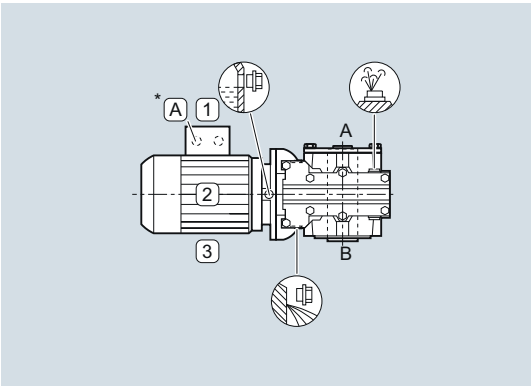

Order code:	
M6 output side A	**D16**
M6 output side B	**D26**

© Siemens AG 2017

Shaft-mounted design (continued)

Helical worm gearboxes CAD, sizes 39 to 89

Oil valves

For an explanation of the symbols, see page 10/3.

M1

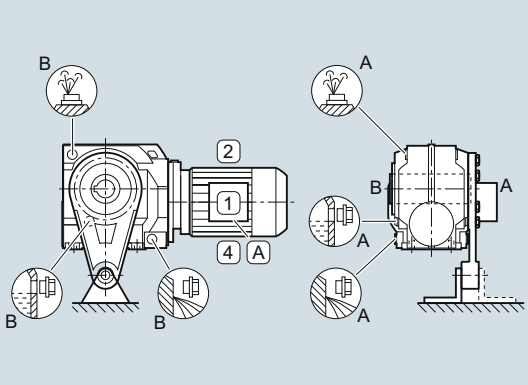

Order code:	
M1 output side A	**D11**
M1 output side B	**D21**

M2

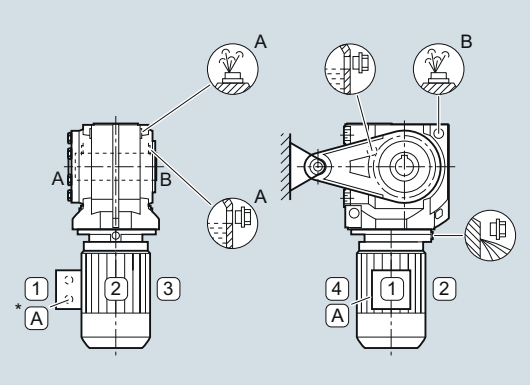

Order code:	
M2 output side A	**D12**
M2 output side B	**D22**

M3

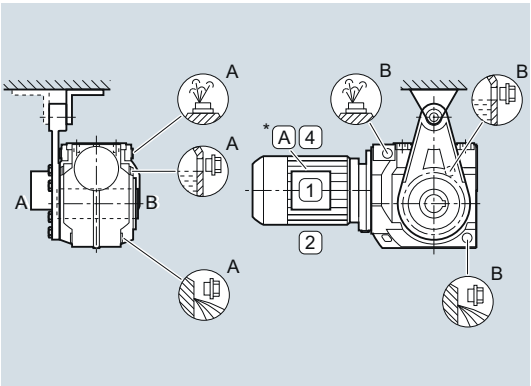

Order code:	
M3 output side A	**D13**
M3 output side B	**D23**

M4

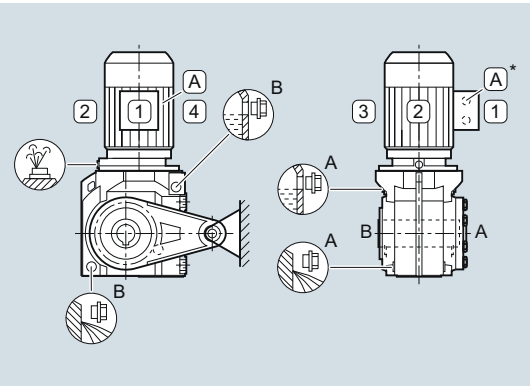

Order code:	
M4 output side A	**D14**
M4 output side B	**D24**

M5

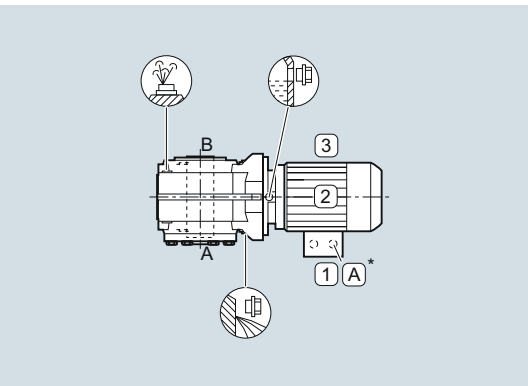

Order code:	
M5 output side A	**D15**
M5 output side B	**D25**

M6

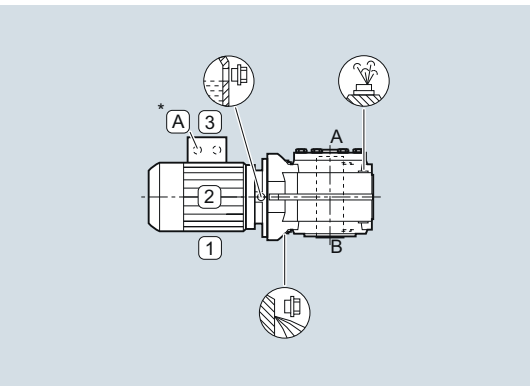

Order code:	
M6 output side A	**D16**
M6 output side B	**D26**

© Siemens AG 2017

Housing flange design and flange-mounted design

Helical worm gearboxes CAZ and C.F, size 29

Oil valves

Size 29 is lubricated for life.

For an explanation of the symbols, see page 10/3.

M1

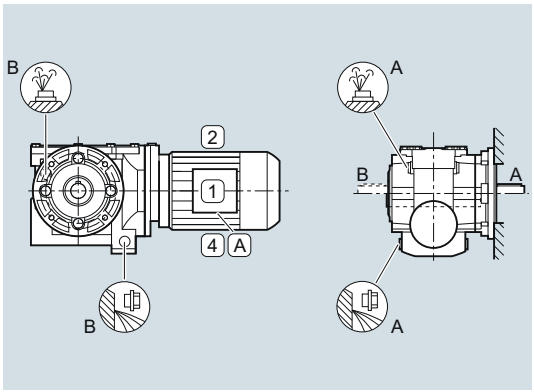

Order code:	
M1 output side A	**D11**
M1 output side B	**D21**

M2

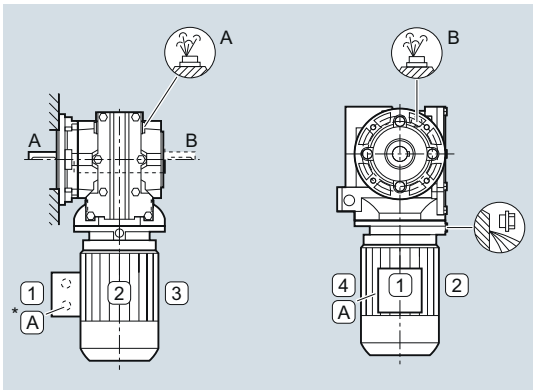

Order code:	
M2 output side A	**D12**
M2 output side B	**D22**

M3

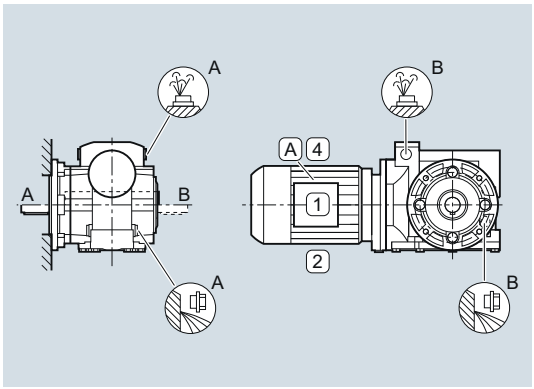

Order code:	
M3 output side A	**D13**
M3 output side B	**D23**

M4

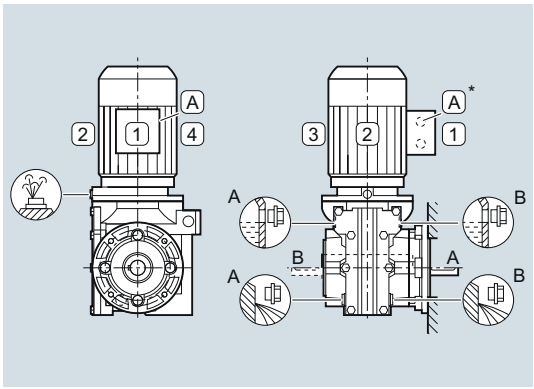

Order code:	
M4 output side A	**D14**
M4 output side B	**D24**

M5

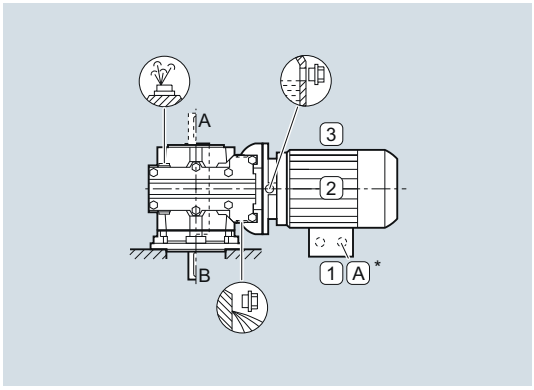

Order code:	
M5 output side A	**D15**
M5 output side B	**D25**

M6

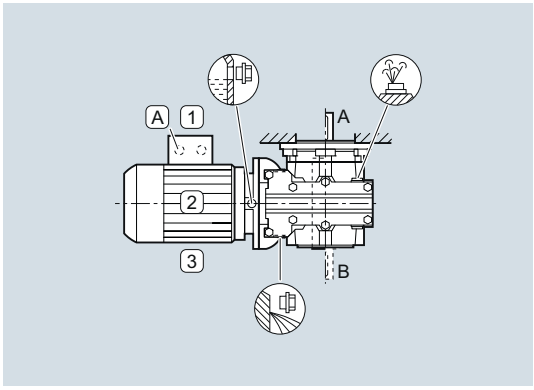

Order code:	
M6 output side A	**D16**
M6 output side B	**D26**

© Siemens AG 2017

Housing flange design and flange-mounted design (continued)

Helical worm gearboxes CAZ and C.F, sizes 39 to 89

Oil valves

For an explanation of the symbols, see page 10/3.

M1

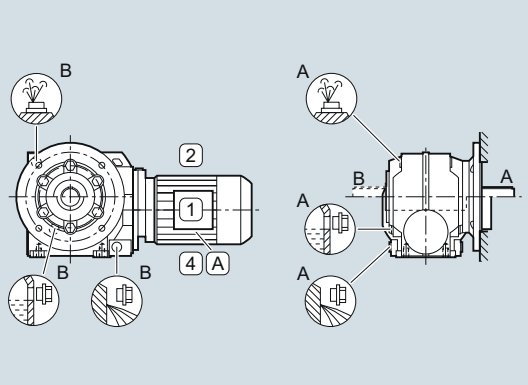

Order code:	
M1 output side A	**D11**
M1 output side B	**D21**

M2

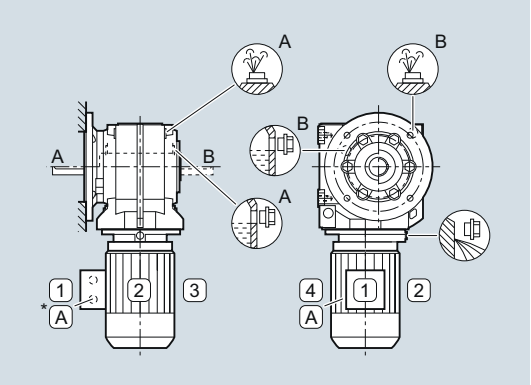

Order code:	
M2 output side A	**D12**
M2 output side B	**D22**

M3

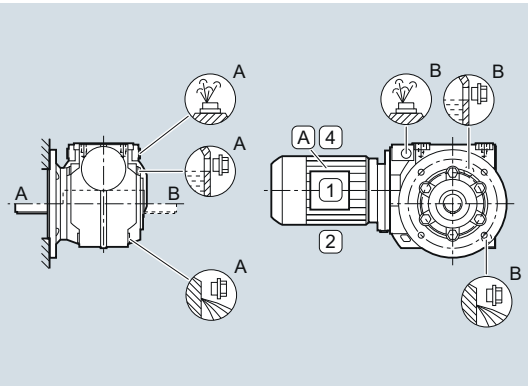

Order code:	
M3 output side A	**D13**
M3 output side B	**D23**

M4

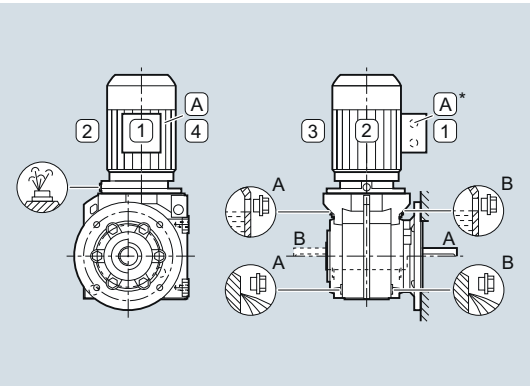

Order code:	
M4 output side A	**D14**
M4 output side B	**D24**

M5

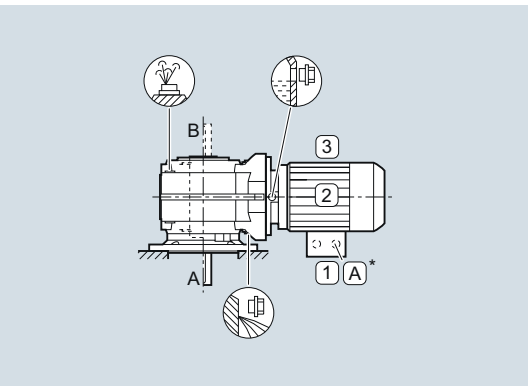

Order code:	
M5 output side A	**D15**
M5 output side B	**D25**

M6

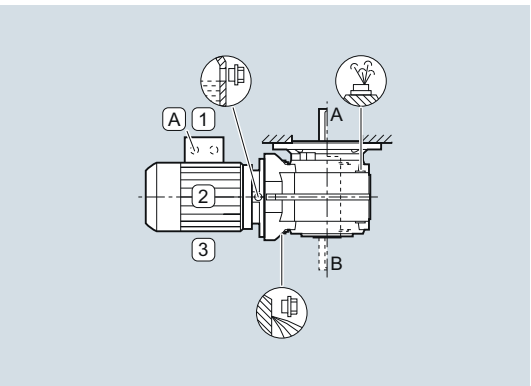

Order code:	
M6 output side A	**D16**
M6 output side B	**D26**

© Siemens AG 2017

Foot-mounted design

Helical worm gearboxes C, size 29

Oil valves

Size 29 is lubricated for life.

For an explanation of the symbols, see page 10/3.

M1

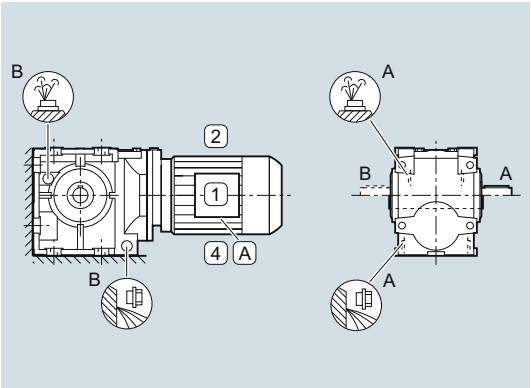

Order code:	
M1 output side A	**D11**
M1 output side B	**D21**

M2

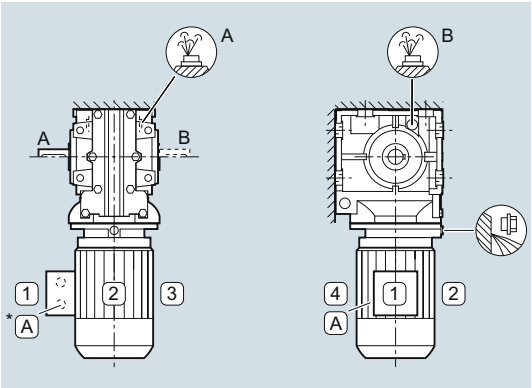

Order code:	
M2 output side A	**D12**
M2 output side B	**D22**

M3

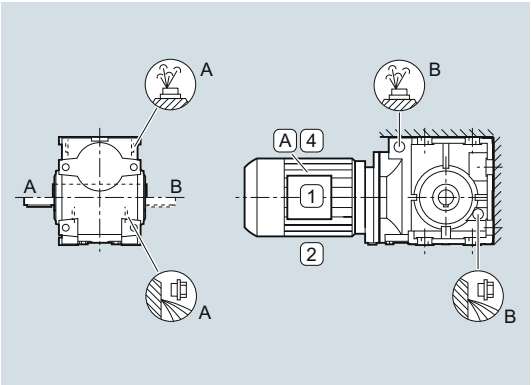

Order code:	
M3 output side A	**D13**
M3 output side B	**D23**

M4

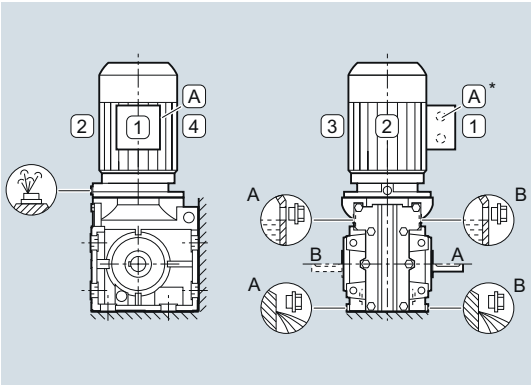

Order code:	
M4 output side A	**D14**
M4 output side B	**D24**

M5

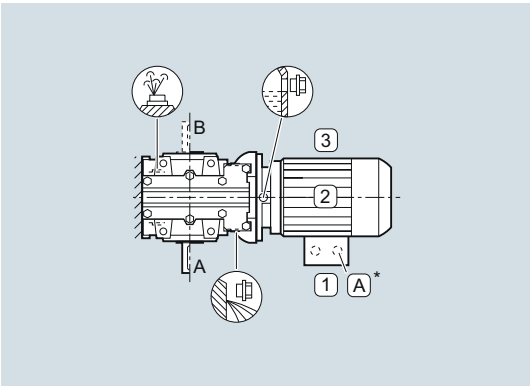

Order code:	
M5 output side A	**D15**
M5 output side B	**D25**

M6

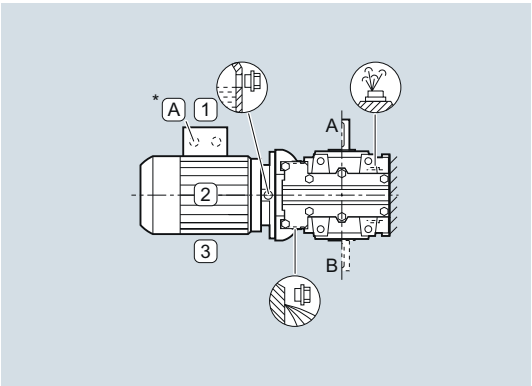

Order code:	
M6 output side A	**D16**
M6 output side B	**D26**

© Siemens AG 2017

Foot-mounted design (continued)

Helical worm gearboxes C, sizes 39 to 89

Oil valves

For an explanation of the symbols, see page 10/3.

M1

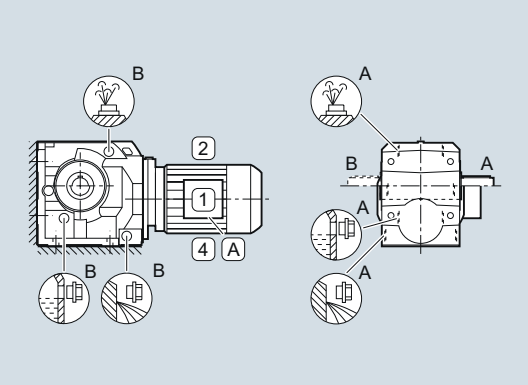

Order code:	
M1 output side A	**D11**
M1 output side B	**D21**

M2

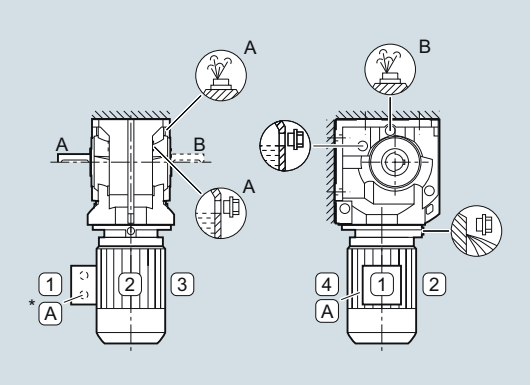

Order code:	
M2 output side A	**D12**
M2 output side B	**D22**

M3

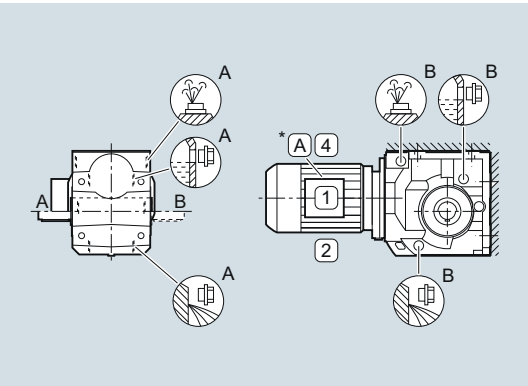

Order code:	
M3 output side A	**D13**
M3 output side B	**D23**

M4

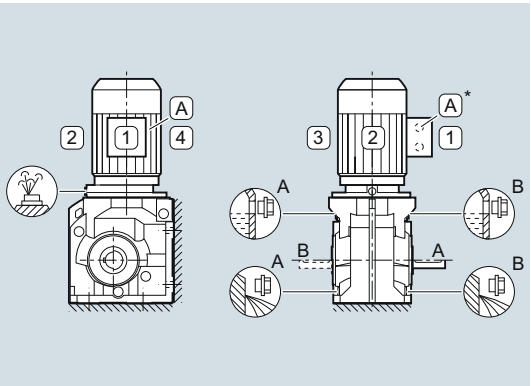

Order code:	
M4 output side A	**D14**
M4 output side B	**D24**

M5

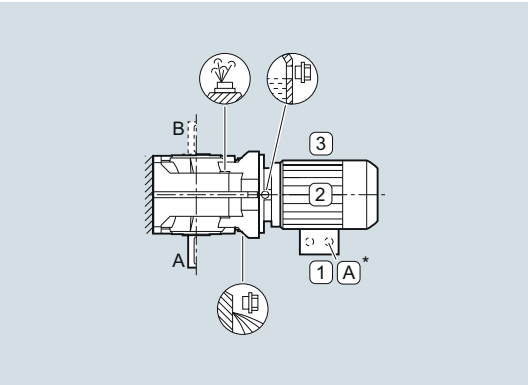

Order code:	
M5 output side A	**D15**
M5 output side B	**D25**

M6

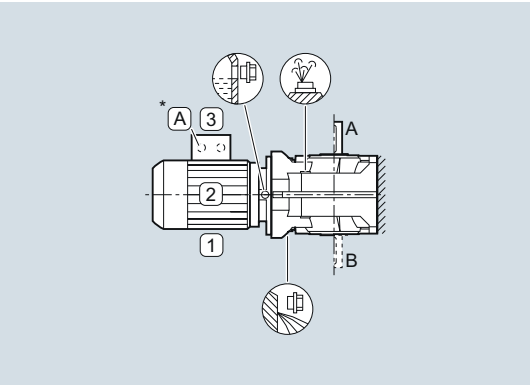

Order code:	
M6 output side A	**D16**
M6 output side B	**D26**

© Siemens AG 2017

Foot-mounted, flange-mounted, shaft-mounted and housing flange designs

Worm gearboxes S., sizes 09 to 29

Oil valves

The worm gearboxes S are lubricated for life.
For an explanation of the symbols, see page 10/3.

M0 is a universal mounting position in which the geared motor can be installed in any position.

Order code:

M0 output side A	**D10**
M0 output side B	**D20**

M1

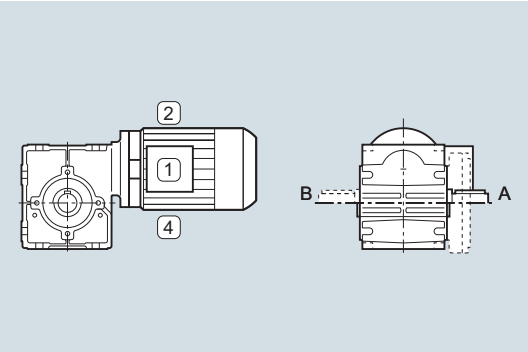

Order code:

M1 output side A	**D11**
M1 output side B	**D21**

M2

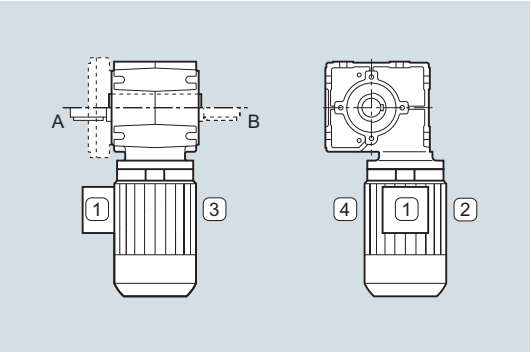

Order code:

M2 output side A	**D12**
M2 output side B	**D22**

M3

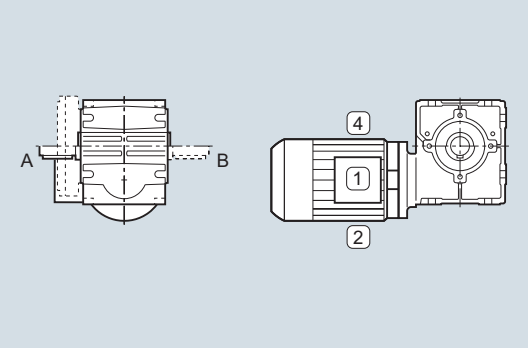

Order code:

M3 output side A	**D13**
M3 output side B	**D23**

M4

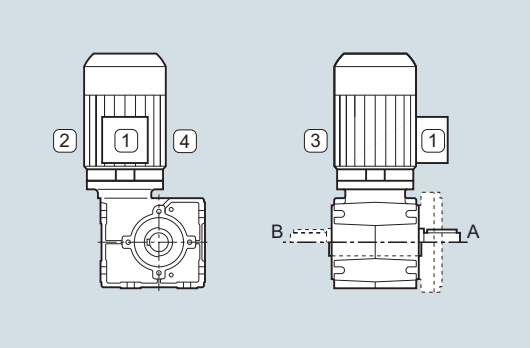

Order code:

M4 output side A	**D14**
M4 output side B	**D24**

M5

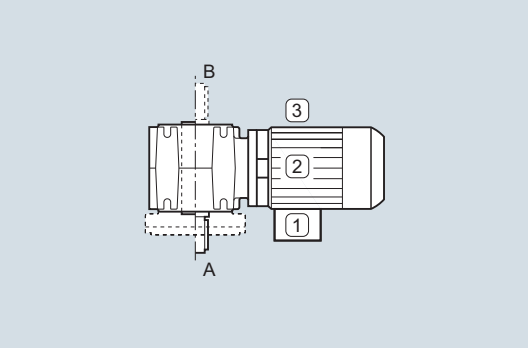

Order code:

M5 output side A	**D15**
M5 output side B	**D25**

M6

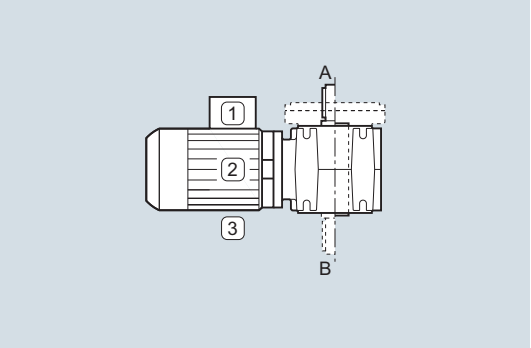

Order code:

M6 output side A	**D16**
M6 output side B	**D26**

© Siemens AG 2017

Overview

The tandem gearbox is mounted in the same position as the main gearbox. The diagrams below are only designed to show the position of the oil control valves of the 2nd gearbox.

Note:

In a horizontal operating position the convex face of the housing of the 2nd gearbox generally points vertically downwards.
For an explanation of the symbols, see page 10/3.

Tandem gearbox: 2nd gearbox size 19

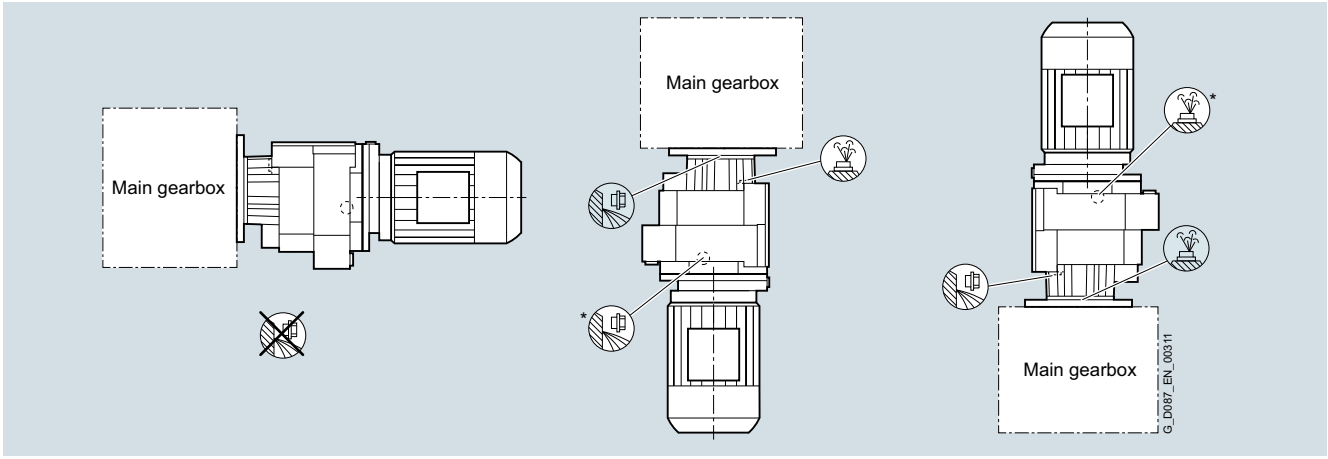

Tandem gearbox: 2nd gearbox size 39

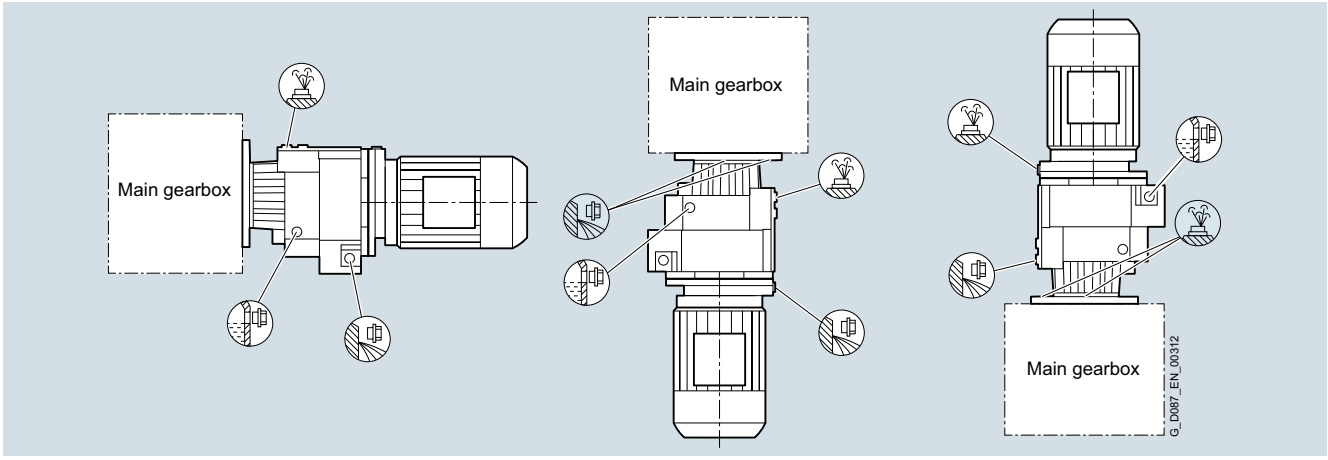

Tandem gearbox: 2nd gearbox sizes 49 to 69

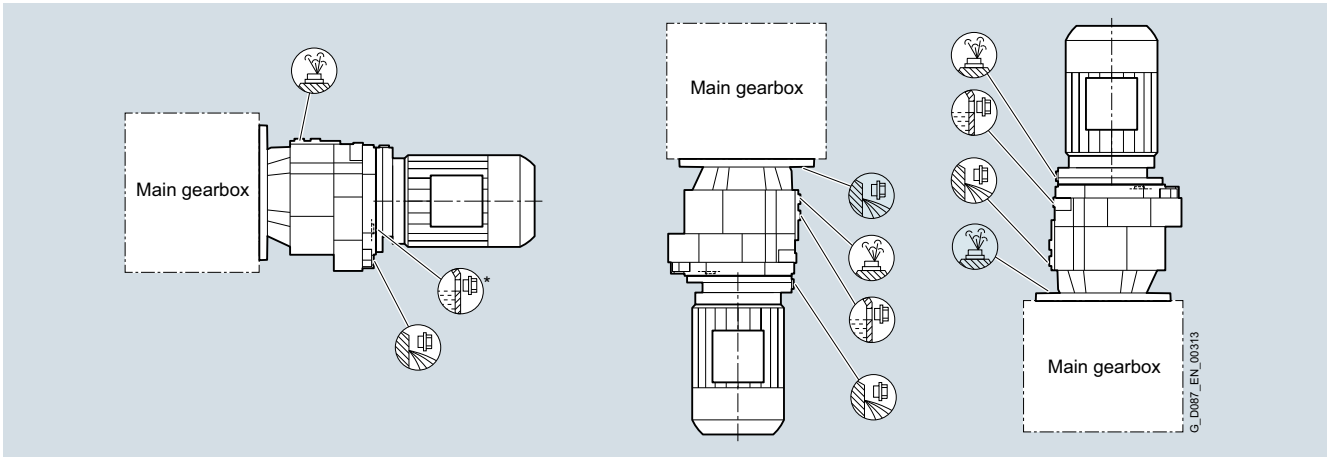

© Siemens AG 2017

Special mounting positions

Overview

Apart from the standard types of construction, geared motors can also be supplied in different inclined positions.

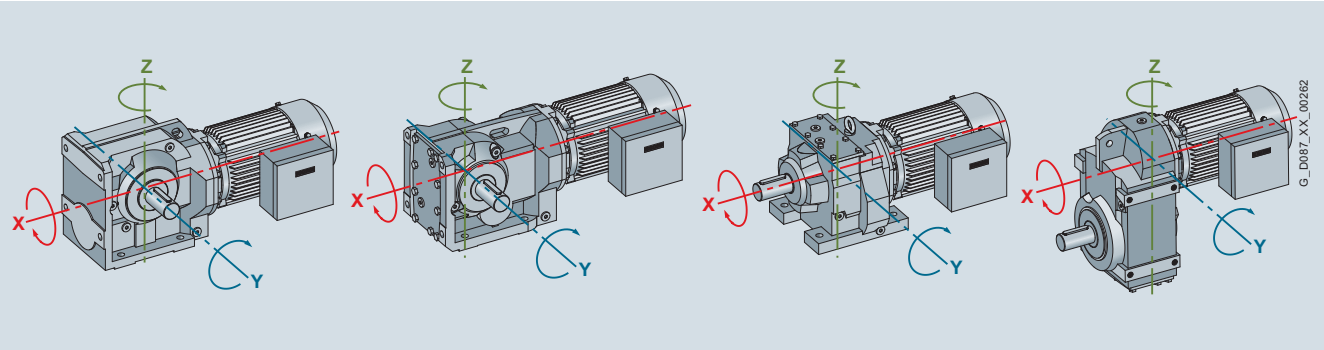

Fig. 10/6 Axes of rotation of the geared motors

Order code:

Y axis		X axis		Z axis	
Rotation angle 5 °	**E01**	Rotation angle 5 °	**E21**	Rotation angle 5 °	**E41**
Rotation angle 10 °	**E02**	Rotation angle 10 °	**E22**	Rotation angle 10 °	**E42**
Rotation angle 15 °	**E03**	Rotation angle 15 °	**E23**	Rotation angle 15 °	**E43**
Rotation angle 20 °	**E04**	Rotation angle 20 °	**E24**	Rotation angle 20 °	**E44**
Rotation angle 25 °	**E05**	Rotation angle 25 °	**E25**	Rotation angle 25 °	**E45**
Rotation angle 30 °	**E06**	Rotation angle 30 °	**E26**	Rotation angle 30 °	**E46**
Rotation angle 35 °	**E07**	Rotation angle 35 °	**E27**	Rotation angle 35 °	**E47**
Rotation angle 40 °	**E08**	Rotation angle 40 °	**E28**	Rotation angle 40 °	**E48**
Rotation angle 45 °	**E09**	Rotation angle 45 °	**E29**	Rotation angle 45 °	**E49**
Rotation angle 50 °	**E10**	Rotation angle 50 °	**E30**	Rotation angle 50 °	**E50**
Rotation angle 55 °	**E11**	Rotation angle 55 °	**E31**	Rotation angle 55 °	**E51**
Rotation angle 60 °	**E12**	Rotation angle 60 °	**E32**	Rotation angle 60 °	**E52**
Rotation angle 65 °	**E13**	Rotation angle 65 °	**E33**	Rotation angle 65 °	**E53**
Rotation angle 70 °	**E14**	Rotation angle 70 °	**E34**	Rotation angle 70 °	**E54**
Rotation angle 75 °	**E15**	Rotation angle 75 °	**E35**	Rotation angle 75 °	**E55**
Rotation angle 80 °	**E16**	Rotation angle 80 °	**E36**	Rotation angle 80 °	**E56**
Rotation angle 85 °	**E17**	Rotation angle 85 °	**E37**	Rotation angle 85 °	**E57**

Use the functions of the DT Configurator to precisely design the special mounting position you require.

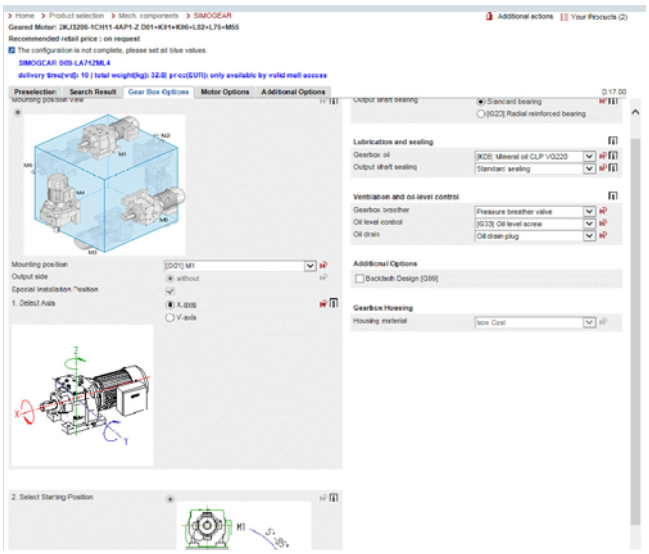

Fig. 10/7 DT Configurator

© Siemens AG 2017

Overview

Mounting type	Type designation 2nd data position	Possible for D, Z	E	F	B	K	C	S	Example	Article No. 14th data position
Foot-mounted design	-	✓	✓	✓	✓	✓	✓	✓	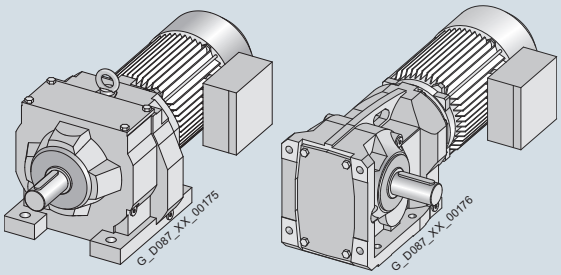	**A**
Foot/flange-mounted design	B	✓[1]		-	-	-	-	-	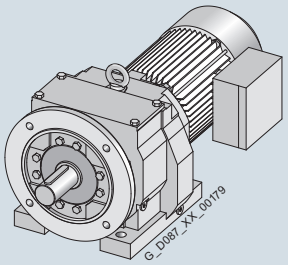	**B**
Flange-mounted design (A type)	F	✓	✓	✓	✓	✓	✓	✓	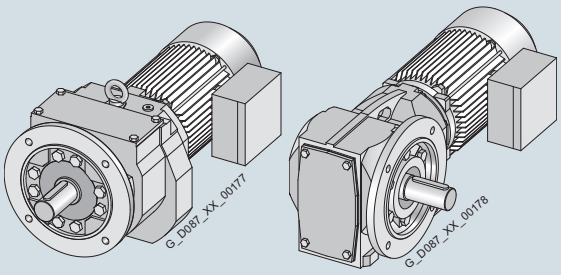	**F**
Housing flange (C type)	Z	✓	✓	✓	✓	✓	✓	✓	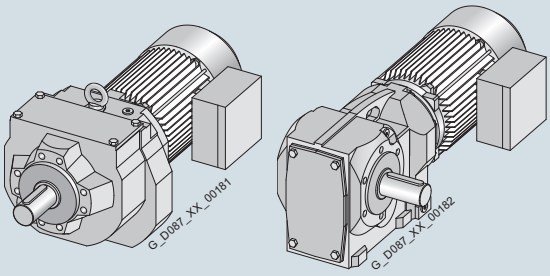	**H**
Shaft-mounted design (torque arm)	D	-	-	✓	✓	-	✓	✓	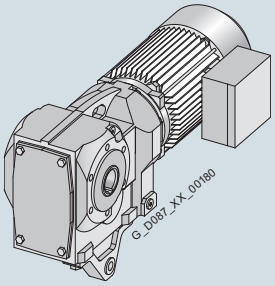	**D**
		-	-	-	-	✓	-	-		**C**

[1] Only for sizes 29 to 89

© Siemens AG 2017

Mounting types

Flange-mounted designs

The flange-mounted designs are available with different diameters.

Gearbox type	Flange diameter mm													Order code
Helical gearboxes DF and ZF														
Gearbox size	**19**	**29**	**39**	**49**	**59**	**69**	**79**	**89**	**109**	**129**	**149**	**169**	**189**	
	120	120	120											**H02**
	140	140		140										**H03**
	160	160	160	160	160									**H04**
			200	200	200	200								**H05**
					250	250	250							**H06**
							300	300						**H07**
								350	350	350				**H08**
									450	450	450	450		**H09**
											550	550	550	**H10**
													660	**H11**
Helical gearboxes DB and ZB														
Gearbox size	**29**		**39**		**49**		**59**		**69**		**79**		**89**	
	120		120											**H02**
					140									**H03**
					160		160							**H04**
									200					**H05**
											250			**H06**
													300	**H07**
Helical gearboxes EF														
Gearbox size	**39**		**49**		**69**		**89**		**109**		**129**		**149**	
	120													**H02**
	140													**H03**
	160		160											**H04**
	200		200		200									**H05**
			250		250		250							**H06**
							300		300					**H07**
									350		350		350	**H08**
											450		450	**H09**
Parallel shaft gearboxes F..F														
Gearbox size	**29**	**39**	**49**	**69**	**79**	**89**	**109**	**129**	**149**	**169**	**189**			
	120													**H02**
	160	160												**H04**
			200											**H05**
				250	250									**H06**
						300								**H07**
							350							**H08**
								450	450					**H09**
										550				**H10**
											660			**H11**
Bevel gearboxes B.F														
Gearbox size	**19**			**29**			**39**			**49**				
	120			120										**H02**
				160			160							**H04**
							200			200				**H05**
Bevel gearboxes K.F														
Gearbox size	**39**	**49**	**69**	**79**	**89**	**109**	**129**	**149**	**169**	**189**				
	160													**H04**
		200												**H05**
			250	250										**H06**
					300									**H07**
						350								**H08**
							450	450						**H09**
									550					**H10**
										660				**H11**

10

© Siemens AG 2017

Flange-mounted designs (continued)

Gearbox type	Flange diameter mm						Order code
Helical worm gearboxes C.F							
Gearbox size	**29**	**39**	**49**	**69**	**89**		
	120						**H02**
	160	160					**H04**
			200	200			**H05**
					250		**H06**
Worm gearboxes S.F							
Gearbox size	**09**	**19**	**29**				
	80	110	120				**H01**
	120 / Q90	120	160 / Q136				**H02**

Water drain holes at the output flange

For gearboxes in a flange-mounted design, water drain holes can be located at the output flange. This is required for mounting position M2 (output shaft facing upwards), if there is a risk that water will collect in the output flange.

Order code:	
Water drain holes at the output flange	**G77**

Flange diameter mm	Possible for												
Helical gearboxes Z and D													
Gearbox size	**19**	**29**	**39**	**49**	**59**	**69**	**79**	**89**	**109**	**129**	**149**	**169**	**189**
120													
140				✓									
160				✓	✓[1]								
200				✓	✓	✓[2]							
250					✓	✓	✓[1]						
300							✓	✓					
350								✓	✓	✓			
450									✓	✓	✓	✓	
550											✓	✓	✓
660													✓

[1] Water drain holes are also possible for foot/flange-mounted designs
[2] Water drain holes are only possible for foot/flange-mounted designs

Helical gearboxes E								
Gearbox size	**39**	**49**	**69**	**89**	**109**	**129**	**149**	
120	✓							
140	✓							
160	✓	✓						
200	✓	✓	✓					
250		✓	✓	✓				
300				✓	✓			
350					✓	✓	✓	
450						✓	✓	

Parallel shaft gearboxes F											
Gearbox size	**29**	**39**	**49**	**69**	**79**	**89**	**109**	**129**	**149**	**169**	**189**
120											
140											
160		✓									
200			✓								
250				✓	✓						
300						✓					
350							✓				
450								✓	✓		
550										✓	
660											✓

10

© Siemens AG 2017

Mounting types

Flange-mounted designs (continued)

Water drain holes at the output flange

Flange diameter mm	Possible for									
Bevel gearboxes K										
Gearbox size	**39**	**49**	**69**	**79**	**89**	**109**	**129**	**149**	**169**	**189**
160	✓									
200		✓								
250			✓	✓						
300					✓					
350						✓				
450							✓	✓		
550									✓	
660										✓

Output flange seal

The flange sealing option enables you to create a fluid-tight interface between the housing and the output flange. The seal prevents the escape of fluids (e.g. oil or water).

The gearbox in a flange-mounted design can be used when a fluid-tight space at the output is required. Input gears are a typical application.

The flange sealing option must always be ordered for use in combination with the "water drain holes at the output flange" option.

Order code:

Output flange seal	**G78**

Parallel shaft gearboxes F.AD in a shaft-mounted design

The rubber buffers (supplied loose) are used to flexibly support the gearbox on the housing plate provided.

When mounting, the rubber buffers must be pretensioned to the dimension specified in the dimensional drawing.

The elastomer used for support is manufactured out of natural rubber 70° ± 5 Shore A.

The rubber buffers are suitable for all mounting positions and can withstand temperatures of between -40 and +80 °C.

Article No. at 14th data position

Shaft-mounted design	**D**

The dimensions of the torque arm can be seen in the dimensional drawings.

Bevel gearboxes KAD in a shaft-mounted design

The torque arm of bevel gearboxes K is mounted on the underside of the housing. The rubber buffers are used to flexibly support the gearbox on the torque arm.

The elastomer used for support is manufactured out of natural rubber 60° Shore A.

The rubber elastic buffers are suitable for all mounting positions and can withstand temperatures of between -40 and +80 °C.

Article No. at 14th data position

Shaft-mounted design	**C**

The dimensions of the torque arm can be seen in the dimensional drawings.

© Siemens AG 2017

Bevel gearboxes BAD. in a shaft-mounted design

The torque arm can be screwed to the gearbox housing at various positions.

The elastomer used for support is manufactured out of natural rubber 60° Shore A. The rubber elastic buffers are suitable for all mounting positions and can withstand temperatures of between -40 and +80 °C.

Article No. at 14th data position	
Shaft-mounted design	**D**

When ordered, the torque arm is supplied loose.

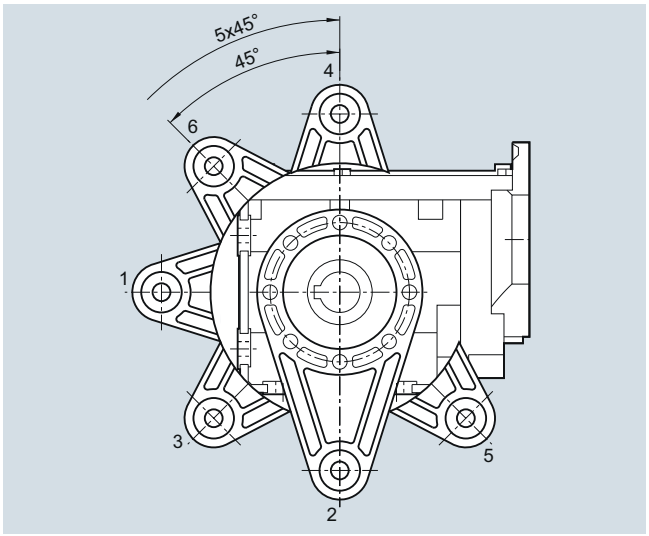

Fig. 10/8 Bevel gearboxes BAD, sizes 19 and 29

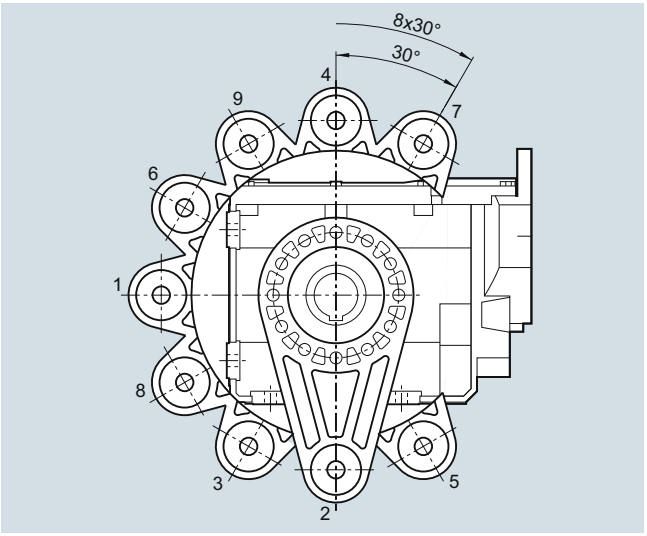

Fig. 10/9 Bevel gearboxes BAD, sizes 39 and 49

Helical worm gearboxes CAD. in a shaft-mounted design

Shaft-mounted design for size 29

The torque arm can be screwed to the gearbox housing at various positions.

The elastomer used for support is manufactured out of natural rubber 60° Shore A. The rubber elastic buffers are suitable for all mounting positions and can withstand temperatures of between -40 and +80 °C.

Article No. at 14th data position	
Shaft-mounted design	**D**

When ordered, the torque arm is supplied loose.

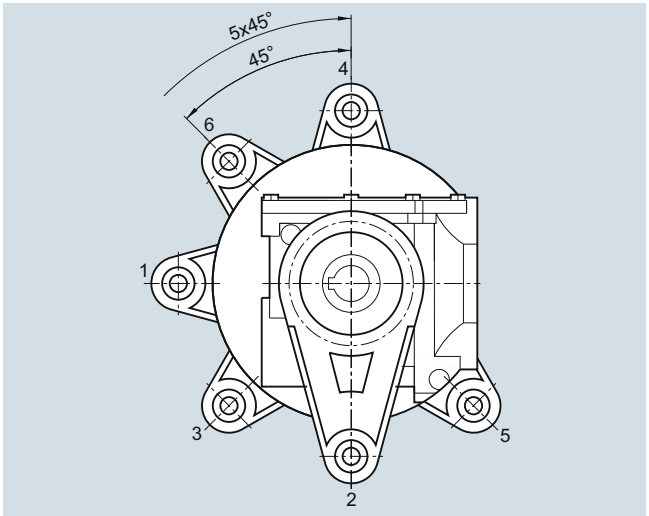

Fig. 10/10 Helical worm gearboxes CAD, size 29

© Siemens AG 2017

Mounting types

Helical worm gearboxes CAD. in a shaft-mounted design (continued)

Shaft-mounted design for sizes 39 to 89

The torque arm can be screwed to the gearbox housing at various positions.

The elastomer used for support is manufactured out of natural rubber 60° Shore A. The rubber elastic buffers are suitable for all mounting positions and can withstand temperatures of between -40 and +80 °C.

Article No. at 14th data position	
Shaft-mounted design	**D**

When ordered, the torque arm is supplied loose.

Order code:

Figure 1	**G09**
Figure 2	**G10**

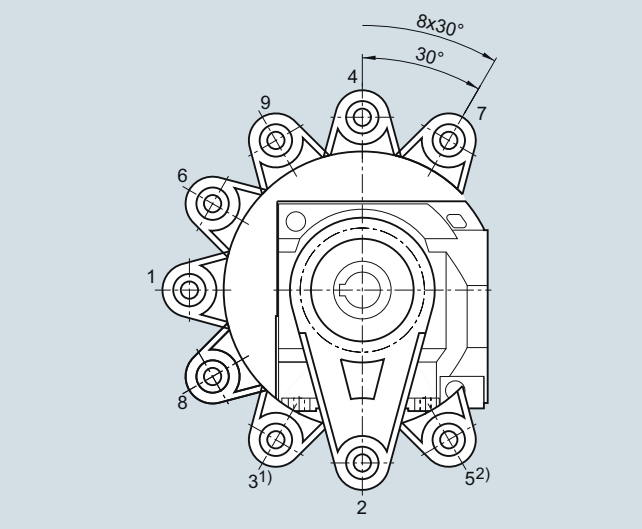

Fig. 10/11 Helical worm gearboxes CAD, Figure 1, sizes 39 to 89

1) Position not possible for sizes CAD.39 and CAD.69

2) Position not possible for size CAD.39

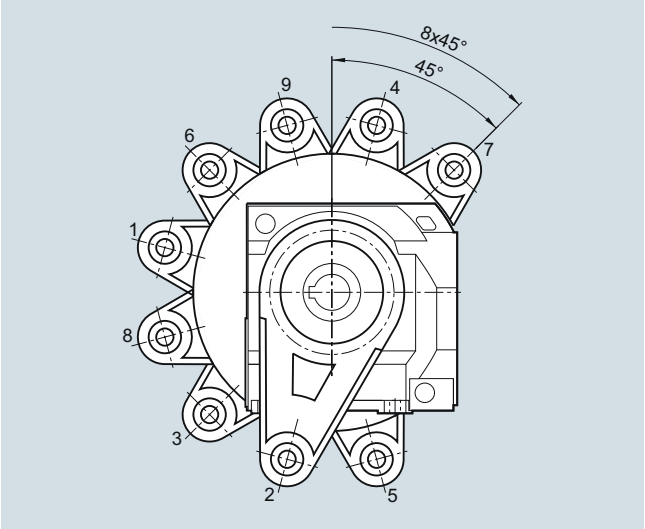

Fig. 10/12 Helical worm gearboxes CAD, Figure 2, sizes 39 to 89

10

Worm gearboxes SAD. in a shaft-mounted design

The torque arm can be screwed to the gearbox housing at various positions.

Article No. at 14th data position	
Shaft-mounted design	**D**

When ordered, the torque arm is supplied loose.

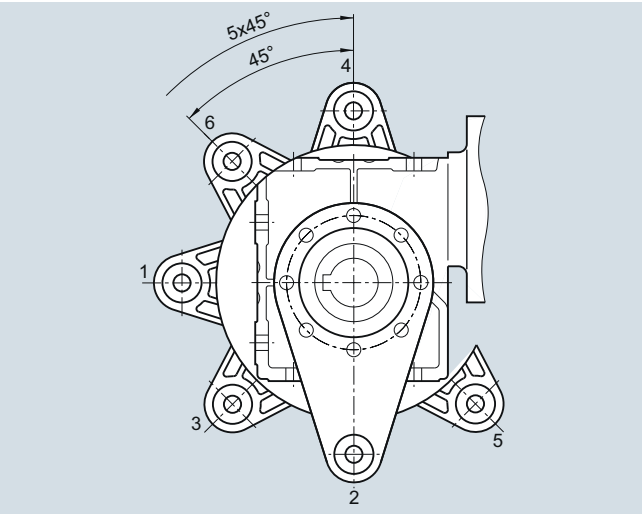

Fig. 10/13 Worm gearboxes S in a shaft-mounted design

© Siemens AG 2017

Selection and ordering data

Shaft design	Dimensions mm						Article No. 8th data position	Article No. supplement
Helical gearboxes Z and D								
Gearbox size	**19**	**29**	**39**	**49**	**59**	**69**		
Solid shaft	V20 x 40	V25 x 50	V25 x 50	V30 x 60	V35 x 70	V35 x 70	**1**	
	V16 x 28						**2**	
	V16 x 40						**3**	
Solid shaft without feather key	VG20 x 40	VG25 x 50	VG25 x 50	VG30 x 60	VG35 x 70	VG35 x 70	**9**	**H1G**
Solid shaft, inches	V0.75" x 1.57"	V1" x 1.97"	V1" x 1.97"	V1.25" x 2.36"	V1.375" x 2.76"	V1.375" x 2.76"	**9**	**H6A**
Gearbox size	**79**	**89**	**109**	**129**	**149**	**169**		
Solid shaft	V40 x 80	V50 x 100	V60 x 120	V70 x 140	V90 x 170	V110x210	**1**	
Solid shaft without feather key	VG40 x 80	VG50 x 100	-	-	-	-	**9**	**H1G**
Solid shaft, inches	V1.625" x 3.15"	V2.125" x 3.94"	V2.375" x 4.72"	V2.875" x 5.51"	V3.625" x 6.69"	V4.375"x8.27"	**9**	**H6A**
Gearbox size	**189**							
Solid shaft	V120x210						**1**	
Solid shaft, inches	V4.75"x8.27"						**9**	**H6A**
Helical gearboxes E								
Gearbox size	**39**	**49**	**69**	**89**	**109**	**129**	**149**	
Solid shaft	V20 x 40	V25 x 50	V30 x 60	V40 x 80	V50 x 100	V60 x 120	V70 x 140	**1**	
Solid shaft, inches	V0.75" x 1.57"	V1" x 1.97"	V1.25" x 2.36"	V1.625" x 3.15"	V2.125" x 3.94"	V2.375" x 4.725"	V2.875" x 5.51"	**9**	**H6A**
Parallel shaft gearboxes F								
Gearbox size	**29**	**39**	**49**	**69**	**79**	**89**		
Solid shaft	V25 x 50	V25 x 50	V30 x 60	V35 x 70	V40 x 80	V50 x 100	**1**	
Solid shaft without feather key	VG25 x 50	VG25 x 50	VG30 x 60	VG35 x 70	VG40 x 80	VG50 x 100	**9**	**H1G**
Solid shaft, inches	V1" x 1.97"	V1" x 1.97"	V1.25" x 2.36"	V1.375" x 2.76"	V1.625" x 3.15"	V2" x 3.94"	**9**	**H6A**
Hollow shaft	H25	H30	H35	H40	H40	H50	**5**	
Hollow shaft, inches	H1"	H1.25"	H1.375"	H1.5"	H1.5"	H2"	**9**	**H7A**
Hollow shaft with shrink disk	HS25	HS30	HS35	HS40	HS40	HS50	**9**	**H3A**
SIMOLOC assembly system, metric	HF25	HF30	HF35	HF40	HF40	HF50	**9**	**H3G**
	HF20	HF25	HF30	HF35	HF35	HF40	**9**	**H3H**
SIMOLOC assembly system, imperial	HF1.0"	HF1.25"	HF1.375"	HF1.5"	HF1.5"	HF2.0"	**9**	**H3J**
	HF0.75"	HF1.1875"	HF1.4375"	HF1.625"	HF1.625"	HF1.9375"	**9**	**H3K**
		HF1.0"	HF1.25"	HF1.4375"	HF1.4375"	HF1.75"	**9**	**H3L**
		-	HF1.1875"	HF1.375"	HF1.375"	HF1.625"	**9**	**H3M**
Splined hollow shaft		N30	N35	N35	N45	N50	**9**	**H4A**
Gearbox size	**109**	**129**	**149**	**169**	**189**			
Solid shaft	V60 x 120	V70 x 140	V90 x 170	V110x120	V120x210		**1**	
Solid shaft, inches	V2.375" x 4.72	V2.875 x 5.51	V3.625" x 6.69"	V4.375"x8.27"	V4.75"x8.27"		**9**	**H6A**
Hollow shaft	H60	H70	H90	H100	H120		**5**	
Hollow shaft, inches	H2.375"	H2.75"	H3.625"	H4"	H4.5"		**9**	**H7A**
Hollow shaft with shrink disk	HS65	HS75	HS95	HS105	HS125		**9**	**H3A**
Splined hollow shaft	N65	N70	N85	N90	N110		**9**	**H4A**
Bevel gearboxes B								
Gearbox size	**19**	**29**	**39**	**49**				
Solid shaft	V20 x 40	V20 x 40	V30 x 60	V35 x 70			**1**	
Solid shaft without feather key	VG20 x 40	VG20 x 40	VG30 x 60	VG35 x 70			**9**	**H1G**
Solid shaft, inches	V0.75" x 1.57"	V0.75" x 1.57"	V1" x 1.97"	V1.375" x 2.76"			**9**	**H6A**
Solid shaft, both ends [1]	VD20 x 40	VD20 x 40	VD30 x 60	VD35 x 70			**9**	**H5A**
Hollow shaft	H20	H20	H30	H40			**5**	
		H25	H35	H35			**6**	
			H40				**7**	
Hollow shaft, inches	H0.75"	H0.75"	H1.25"	H1.5"			**9**	**H7A**
Hollow shaft with shrink disk		HS20	HS35	HS40			**9**	**H3A**
SIMOLOC assembly system, metric		HF25	HF30	HF35			**9**	**H3G**
		HF20	HF25	HF30			**9**	**H3H**
		-	-	HF40			**9**	**H3I**

[1] Can only be selected in conjunction with foot-mounted design

© Siemens AG 2017

Shaft designs

Selection and ordering data

Shaft design	Dimensions mm					Article No. 8th data position	Article No. supplement
Bevel gearboxes B							
Gearbox size	**19**	**29**	**39**	**49**			
SIMOLOC assembly system, imperial		HF1.0"	HF1.25"	HF1.375"		**9**	**H3J**
		HF0.75"	HF1.1875"	HF1.4375"		**9**	**H3K**
			HF1.0"	HF1.25"		**9**	**H3L**
				HF1.1875"		**9**	**H3M**
				HF1.625"		**9**	**H3N**
Bevel gearboxes K							
Gearbox size	**39**	**49**	**69**	**79**	**89**		
Solid shaft	V25 x 50	V30 x 60	V35 x 70	V40 x 80	V50 x 100	**1**	
Solid shaft without feather key	VG25 x 50	VG30 x 60	VG35 x 70	VG40 x 80	VG50 x 100	**9**	**H1G**
Solid shaft, inches	V1" x 1.97"	V1.25" x 2.36"	V1.375" x 2.76"	V1.625" x 3.15"	V2" x 3.94"	**9**	**H6A**
Solid shaft, both ends [1]	VD25 x 50	VD30 x 60	VD35 x 70	VD40 x 80	VD50 x 100	**9**	**H5A**
Hollow shaft	H30	H35	H40	H40	H50	**5**	
Hollow shaft, inches	H1.25"	H1.375"	H1.5"	H1.5"	H2"	**9**	**H7A**
Hollow shaft with shrink disk	HS30	HS35	HS40	HS40	HS50	**9**	**H3A**
SIMOLOC assembly system, metric	HF30	HF35	HF40	HF40	HF50	**9**	**H3G**
	HF25	HF30	HF35	HF35	HF40	**9**	**H3H**
SIMOLOC assembly system, imperial	HF1.25"	HF1.375"	HF1.5"	HF1.5"	HF2.0"	**9**	**H3J**
	HF1.1875"	HF1.4375"	HF1.625"	HF1.625"	HF1.9375"	**9**	**H3K**
	HF1.0"	HF1.25"	HF1.4375"	HF1.4375"	HF1.75"	**9**	**H3L**
	-	HF1.1875"	HF1.375"	HF1.375"	HF1.625"	**9**	**H3M**
Splined hollow shaft	N30	N35	N35	N45	N50	**9**	**H4A**
Gearbox size	**109**	**129**	**149**	**169**	**189**		
Solid shaft	V60 x 120	V70 x 140	V90 x 170	V110x210	V120x210	**1**	
Solid shaft, inches	V2.375" x 4.72"	V2.875" x 5.51"	V3.625" x 6.69"	V4.375" x 8.27"	V4.75" x 8.27"	**9**	**H6A**
Solid shaft, both ends [1]	VD60 x 120	VD70 x 140	VD90 x 170	VD110 x 210	VD120 x 210	**9**	**H5A**
Hollow shaft	H60	H70	H90	H100	H120	**5**	
Hollow shaft, inches	H2.375"	H2.75"	H3.625"	H4"	H4.5"	**9**	**H7A**
Hollow shaft with shrink disk	HS65	HS75	HS95	HS105	HS125	**9**	**H3A**
Splined hollow shaft	N65	N70	N85	N90	N110	**9**	**H4A**
Helical worm gearboxes C							
Gearbox size	**29**	**39**	**49**	**69**	**89**		
Solid shaft	V20 x 40	V25 x 50	V30 x 60	V35 x 70	V45 x 90	**1**	
Solid shaft without feather key	VG20 x 40	VG25 x 50	VG30 x 60	VG35 x 70	VG45 x 90	**9**	**H1G**
Solid shaft, inches	V0.75" x 1.57"	V1" x 1.97"	V1.25" x 2.36"	V1.375" x 2.76"	V1.75" x 3.54"	**9**	**H6A**
Solid shaft, both ends [1]	VD20 x 40	VD25 x 50	VD30 x 60	VD35 x 70	VD45 x 90	**9**	**H5A**
Hollow shaft	H20	H25	H30	H40	H50	**5**	
		H30	H35	H45	H60	**6**	
Hollow shaft, inches	H0.75"	H1.25"	H1.375"	H1.5"	H2"	**9**	**H7A**
Hollow shaft with shrink disk	HS20	HS30	HS35	HS40	HS50	**9**	**H3A**
SIMOLOC assembly system, metric	HF25	HF30	HF35	HF40	HF50	**9**	**H3G**
	HF20	HF25	HF30	HF35	HF40	**9**	**H3H**
SIMOLOC assembly system, imperial	HF1.0"	HF1.25"	HF1.375"	HF1.5"	HF2.0"	**9**	**H3J**
	HF0.75"	HF1.1875"	HF1.4375"	HF1.625"	HF1.9375"	**9**	**H3K**
		HF1.0"	HF1.25"	HF1.4375"	HF1.75"	**9**	**H3L**
		-	HF1.1875"	HF1.375"	HF1.625"	**9**	**H3M**
Worm gearboxes S							
Gearbox size	**09**		**19**	**29**			
Solid shaft	V16 x 40		V20 x 40	V20 x 40		**1**	
	V14 x 30		V18 x 40	V25 x 50		**3**	
Solid shaft, both ends [1]	VD16 x 40		VD20 x 40	VD20 x 40		**9**	**H5A**
Hollow shaft	H16		H18	H20		**5**	
	H14		H20	H25		**6**	
Hollow shaft stainless steel	HX16		HX20	HX20		**9**	**H8A**
Plug-in shaft	VE16 x 40		VE20 x 40	VE20 x 40		**7**	

[1] Can only be selected in conjunction with foot-mounted design

© Siemens AG 2017

SIMOLOC assembly system

The new SIMOLOC assembly system has been designed to provide a friction-locked connection between the motor shaft made of drawn shaft material of grade h11 or lower and the hollow shaft in the gearbox.

The SIMOLOC assembly system offers a low-cost, easy-to-fit alternative to conventional shaft connections such as hollow shaft with a feather key, hollow shaft with shrink disk or hollow shaft with spline.

It is compatible with the shaft-mounted designs of the parallel shaft, bevel and helical worm gearboxes.

Several diameters are available for each gearbox size.

Components of the SIMOLOC assembly system

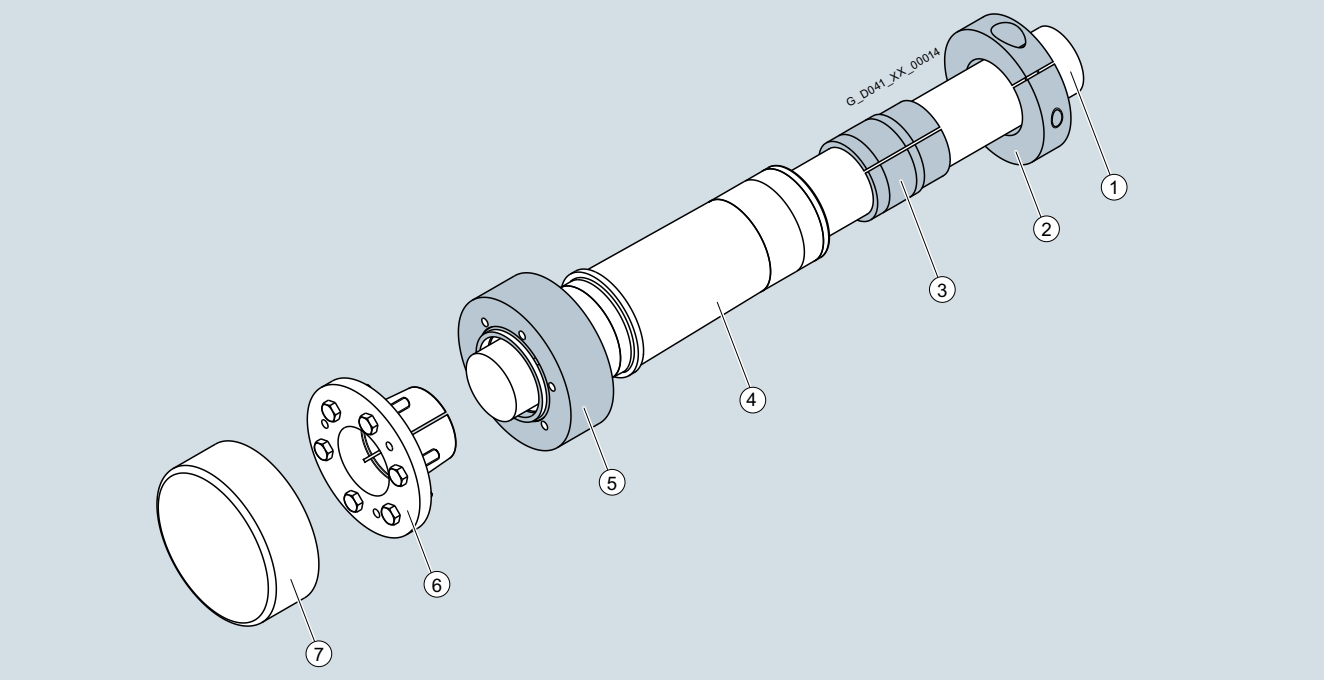

Fig. 10/14 SIMOLOC assembly system

① Machine shaft
② Clamping ring
③ Bronze bushing
④ Hollow shaft of gearbox
⑤ V-ring
⑥ Taper bushing
⑦ Rotating protection cover

Benefits

Cost reduction

- The drive shaft of the motor can be made of low-cost, drawn shaft material of grade h11 or lower.
- The shaft is cheaper to machine because there is no need to machine the shaft seat and a keyway is not required.

Quick and easy mounting

- Easy to mount and dismantle thanks to adequate clearance between the motor shaft and hollow shaft. The press fit is not made until the taper bushing is inserted.
- The press fit prevents the formation of fretting corrosion. The taper bushing can be removed easily in order to separate the press-fit connection.
- No tight fits need to be overcome when the gearbox is pushed onto the motor shaft.

Variability

- Quick adjustment of the gearbox to different motor shaft diameters is possible by replacement of the taper and bronze bushings.
- Easy conversion from metric to inch dimensions and vice versa.

Available diameters

The SIMOLOC assembly system can be supplied for shaft-mounted designs. 2 metric versions and 2 to 4 inch versions are available for all sizes.

Scope of supply

The gearbox is shipped with a SIMOLOC hollow shaft. The diameter-specific components are supplied as a separate assembly kit. The unit is supplied with pre-assembled rotating protection cover. The non-rotating protection cover can be ordered as an option.

© Siemens AG 2017

Shaft designs

Hollow shaft cover

Sealing cap

The bore of the hollow shaft is sealed using a plastic sealing cap.

Gearboxes in size 39 and larger with hollow shaft and shrink disk have a rotating protective cover.

The dimensions of the rotating protective cover can be seen in the dimensional drawings provided in the gearbox chapters.

For safety reasons, stationary protection covers may be required.

Protection cover

For sizes 19 to 189, a stationary protection cover for the hollow shaft or hollow shaft with shrink disk versions can be selected.

The dimensions of the protection cover can be seen in the separate dimensional drawing provided in the gearbox chapters.

Order code:

Protection cover	**G60**

Radially reinforced output shaft bearings

The gearboxes can be supplied with the standard design or with a reinforced output shaft bearing design. The reinforced bearings allow higher radial and combined forces (radial and axial) to be absorbed.

Design	Possible for													Order code
Helical gearboxes Z and D														
Gearbox size	**19**	**29**	**39**	**49**	**59**	**69**	**79**	**89**	**109**	**129**	**149**	**169**	**189**	
Radially reinforced output shaft bearings						✓	✓	✓	✓	✓	✓			**G20**
Parallel shaft gearboxes F														
Gearbox size	**29**	**39**	**49**	**69**	**79**	**89**	**109**	**129**	**149**	**169**	**189**			
Radially reinforced output shaft bearings			✓*)	✓	✓	✓	✓	✓	✓	✓	✓			**G20**
Bevel gearboxes K														
Gearbox size	**39**	**49**	**69**	**79**	**89**	**109**	**129**	**149**	**169**	**189**				
Radially reinforced output shaft bearings		✓*)	✓	✓	✓	✓	✓	✓	✓	✓				**G20**

*) Not possible for flange-mounted design with solid shaft (gearbox type FZF, FDF, KF)

© Siemens AG 2017

Overview

Lubrication

The gearboxes are filled in the factory with a high-quality lubricant. Lubricants permitted for the various gearbox types and applications are listed in the lubricant table.

Other oils from various lubricant manufacturers that have been approved by Siemens AG can be found on the Internet in the Service and Support pages in the List of approved and recommended gear lubricants T 7300:

https://support.automation.siemens.com/WW/view/en/44231658

Note:

For ambient conditions with a high air humidity and salt-laden atmosphere, we recommend that only mineral or PAO oils are used.

Oil quantities

The lubricant quantity depends on the gearbox type, size and mounting position. The corresponding oil quantities are specified in the operating instructions and on the rating plate of the geared motor.

Sealing

The standard models of gearbox are supplied with high-quality radial shaft sealing rings with dust protection lips. This sealing design is reliable for a wide range of applications.

Special application areas and environmental conditions require special radial shaft sealing rings and materials, which are coordinated with the particular gearbox oil and environment. This coordinated sealing system results in a high reliability and availability of the plant.

When compared to standard sealing systems, the maintenance intervals can be extended. This therefore reduces maintenance costs.

Sealing system

Output shaft sealing	Description	Ambient condition	Order code
Normal environmental stress			
Standard seal	High-quality NBR radial shaft sealing ring with dust protection lip.	Environment with low dust and pollution levels with low moisture.	**-**
Longer service life			
Seal with longer service life	Towards the inside of the gearbox, the radial shaft sealing ring with dust protection lip has an additional axial seal. This sealing system has a high degree of reliability as a result of its resistance to pollution in the oil.	Environment with low dust and pollution levels with low moisture.	**G23**
Longer service life and increased environmental stress			
Seal for increased environmental stress	This seal is equipped with an additional fiber disk. In addition to the longer service life, it also provides increased protection against higher environmental stress as a result of dust and dirt deposits. As a consequence, the sealing system has a high degree of reliability. For additional environmental stress, e.g. water jets or significant levels of pollution as a result of production materials, please contact your local Siemens office.	Environments with increased pollution and dust levels as well as low moisture. Typical applications: Production areas with increased pollution and dust, such as wood chips, dusts or granulate as well as occasional spray water.	**G24**

Roller bearing greases for gearboxes and motors

The roller bearings of gearboxes and motors are lubricated in the factory with a roller bearing grease that is coordinated with the selected application area. The quantity of grease between the rolling elements and the space in front of the bearing depends on the operating conditions and the gearbox mounting position. For operation in the selected application areas, it is not necessary to lubricate the roller bearings.

We recommend that the grease filling of the roller bearings is also changed when the oil or shaft sealing rings are replaced.

Other greases supplied by different lubricant manufacturers that have been approved by Siemens AG are specified in the List of approved and recommended gearbox lubricants T 7300.

© Siemens AG 2017

Selection

Gearboxes can be used for different applications. The following lubricants and seals can be selected to ensure that a gearbox is optimally designed for a specific application.

Note:

Note the ambient conditions specified in chapter "General options" on page 12/2.

Selection of lubricant				Selection of seal		
				Environmental stress		
				Standard	Standard	Increased
Area of application	Permissible ambient temperature of oil	Oil type		Service life		
				Standard	Longer	Longer
	°C	Designation acc. to DIN 51502	Order code	-	G23	G24
Helical gearboxes Z, D and E, parallel shaft gearboxes F and bevel gearboxes K						
Standard	-15 … +40	CLP ISO VG220	**K06**	✓	✓	✓
	-35 … +40	CLP ISO PAO VG220	**K12**	✓	✓	✓
	-40 … +10	CLP ISO PAO VG68	**K13**	✓	✓	✓
	-25 … +80	CLP ISO PG VG460	**K08**	✓	✓	✓
	-25 … +50	CLP ISO PG VG220	**K07**	✓	✓	✓
Foodstuff area	-25 … +40	CLP ISO H1 VG460	**K11**	✓	✓	-
	-30 … +10	CLP ISO H1 VG100	**K14**	✓	✓	-
Biodegradable oil	-20 … +40	CLP ISO E VG220	**K10**	✓	✓	-
Bevel gearboxes B						
Standard	-25 … +40	CLP ISO PG VG220	**K07**	✓	✓[1)]	✓[1)]
	-35 … +40	CLP ISO PAO VG220	**K12**	✓	✓[1)]	✓[1)]
	-40 … +10	CLP ISO PAO VG68	**K13**	✓	✓[1)]	✓[1)]
	-25 … +80	CLP ISO PG VG460	**K08**	✓	✓[1)]	✓[1)]
Foodstuff area	-25 … +40	CLP ISO H1 VG460	**K11**	✓	✓[1)]	-
	-30 … +10	CLP ISO H1 VG100	**K14**	✓	✓[1)]	-
Helical worm gearboxes C						
Standard	-25 … +40	CLP ISO PG VG220	**K07**	✓	✓	✓
	-25 … +60	CLP ISO PG VG460	**K08**	✓	✓	✓
	-35 … +40	CLP ISO PAO VG220	**K12**	✓	✓	✓
	-40 … +10	CLP ISO PAO VG68	**K13**	✓	✓	✓
Foodstuff area	-25 … +40	CLP ISO H1 VG460	**K11**	✓	✓	-
	-30 … +10	CLP ISO H1 VG100	**K14**	✓	✓	-
Worm gearboxes S						
Standard	-25 … +40	CLP ISO PG VG220	**K07**	✓	-	-
	-25 … +60	CLP ISO PG VG460	**K08**	✓	-	-
Foodstuff area	-25 … +40	CLP ISO H1 VG460	**K11**	✓	-	-
	-30 … +10	CLP ISO H1 VG100	**K14**	✓	-	-

[1)] Not possible with size B19

CLP = mineral oil
CLP PG = polyglycol oil
E = ester oil, organic oil (bio oil / risk of water pollution, class WGK1)
PAO = poly-alpha-olefin oil
CLP H1 = physiologically safe oil (USDA-H1 approval)

© Siemens AG 2017

Overview

Gearboxes from size 39 for standard mounting positions are supplied as standard with pressure breather valve, oil level control and drain screw.

Gearbox sizes 19 and 29 are supplied ready for operation, lubricated for life and can be operated in mounting positions M1, M3, M5 and M6 without requiring a pressure breather valve. For mounting positions M2 and M4, they are equipped with a pressure breather valve.

Possible venting and oil level control options

Design	Possible for													Order code	Technical information → page
Helical gearboxes Z and D															
Size	**19**	**29**	**39**	**49**	**59**	**69**	**79**	**89**	**109**	**129**	**149**	**169**	**189**		
Lubricated for life	✓	✓													
Pressure breather valve			✓	✓	✓	✓	✓	✓	✓	✓	✓	✓	✓	**G45**	page 10/51
Pressure breathe valve, stainless steel			✓	✓	✓	✓	✓	✓	✓	✓	✓	✓	✓	**G49**	page 10/51
Oil expansion unit			✓	✓	✓	✓	✓	✓	✓	✓	✓	✓	✓	**G47**	page 10/52
Oil sight glass with reflector				✓	✓	✓	✓	✓	✓	✓	✓	✓	✓	**G34**	page 10/54
Magnetic oil drain screw			✓	✓	✓	✓	✓	✓	✓	✓	✓	✓	✓	**G53**	page 10/54
Oil drain valve, straight			✓	✓	✓	✓	✓	✓	✓	✓	✓	✓	✓	**G54**	page 10/54
Oil drain valve, angled			✓	✓	✓	✓	✓	✓	✓	✓	✓	✓	✓	**G55**	page 10/54
Electrical oil level monitoring system								✓	✓	✓	✓	✓	✓	**G37**	page 10/55
Electrical oil level monitoring system ATEX								✓	✓	✓	✓	✓	✓	**G38**	page 10/55
Helical gearboxes E															
Size	**39**		**49**		**69**		**89**		**109**		**129**		**149**		
Pressure breather valve	✓		✓		✓		✓		✓		✓		✓	**G45**	page 10/51
Pressure breathe valve, stainless steel	✓		✓		✓		✓		✓		✓		✓	**G49**	page 10/51
Oil expansion unit	✓		✓		✓		✓		✓		✓		✓	**G47**	page 10/52
Oil sight glass with reflector	✓		✓		✓		✓		✓		✓		✓	**G34**	page 10/54
Magnetic oil drain screw	✓		✓		✓		✓		✓		✓		✓	**G53**	page 10/54
Oil drain valve, straight	✓		✓		✓		✓		✓		✓		✓	**G54**	page 10/54
Oil drain valve, angled	✓		✓		✓		✓		✓		✓		✓	**G55**	page 10/54
Electrical oil level monitoring system							✓		✓		✓		✓	**G37**	page 10/55
Electrical oil level monitoring system ATEX							✓		✓		✓		✓	**G38**	page 10/55
Parallel shaft gearboxes F															
Size	**29**		**39**	**49**	**69**	**79**	**89**	**109**	**129**	**149**	**169**	**189**			
Lubricated for life	✓														
Pressure breather valve			✓	✓	✓	✓	✓	✓	✓	✓	✓	✓		**G45**	page 10/51
Pressure breathe valve, stainless steel			✓	✓	✓	✓	✓	✓	✓	✓	✓	✓		**G49**	page 10/51
Oil expansion unit			✓	✓	✓	✓	✓	✓	✓	✓	✓	✓		**G47**	page 10/52
Oil sight glass with reflector				✓	✓	✓	✓	✓	✓	✓	✓	✓		**G34**	page 10/54
Magnetic oil drain screw			✓	✓	✓	✓	✓	✓	✓	✓	✓	✓		**G53**	page 10/54
Oil drain valve, straight			✓	✓	✓	✓	✓	✓	✓	✓	✓	✓		**G54**	page 10/54
Oil drain valve, angled			✓	✓	✓	✓	✓	✓	✓	✓	✓	✓		**G55**	page 10/54
Electrical oil level monitoring system							✓	✓	✓	✓	✓	✓		**G37**	page 10/55
Electrical oil level monitoring system ATEX							✓	✓	✓	✓	✓	✓		**G38**	page 10/55

© Siemens AG 2017

Venting

Overview (continued)

Possible venting and oil level control options

Design	Possible for								Order code	Technical information ➞ page
Bevel gearboxes B										
Size	**19**		**29**		**39**		**49**			
Lubricated for life	✓		✓							
Pressure breather valve	✓		✓		✓		✓		**G45**	page 10/51
Pressure breathe valve, stainless steel	✓		✓		✓		✓		**G49**	page 10/51
Oil expansion unit			✓		✓		✓		**G47**	page 10/52
Oil sight glass with reflector							✓		**G34**	page 10/54
Magnetic oil drain screw							✓		**G53**	page 10/54
Oil drain valve, straight							✓		**G54**	page 10/54
Oil drain valve, angled							✓		**G55**	page 10/54
Bevel gearboxes K										
Size	**39**	**49**	**69**	**79**	**89**	**109**	**129**	**149**		
Pressure breather valve	✓	✓	✓	✓	✓	✓	✓	✓	**G45**	page 10/51
Pressure breathe valve, stainless steel	✓	✓	✓	✓	✓	✓	✓	✓	**G49**	page 10/51
Oil expansion unit	✓	✓	✓	✓	✓	✓	✓	✓	**G47**	page 10/52
Oil sight glass with reflector		✓	✓	✓	✓	✓	✓	✓	**G34**	page 10/54
Magnetic oil drain screw	✓	✓	✓	✓	✓	✓	✓	✓	**G53**	page 10/54
Oil drain valve, straight	✓	✓	✓	✓	✓	✓	✓	✓	**G54**	page 10/54
Oil drain valve, angled	✓	✓	✓	✓	✓	✓	✓	✓	**G55**	page 10/54
Electrical oil level monitoring system					✓	✓	✓	✓	**G37**	page 10/55
Electrical oil level monitoring system ATEX					✓	✓	✓	✓	**G38**	page 10/55
Helical worm gearboxes C										
Size	**29**		**39**		**49**		**69**	**89**		
Lubricated for life	✓[1)]									
Pressure breather valve	✓		✓		✓		✓	✓	**G45**	page 10/51
Pressure breathe valve, stainless steel	✓		✓		✓		✓	✓	**G49**	page 10/51
Oil expansion unit			✓		✓		✓	✓	**G47**	page 10/52
Oil sight glass with reflector					✓		✓	✓	**G34**	page 10/54
Magnetic oil drain screw			✓		✓		✓	✓	**G53**	page 10/54
Oil drain valve, straight			✓		✓		✓	✓	**G54**	page 10/54
Oil drain valve, angled			✓		✓		✓	✓	**G55**	page 10/54
Worm gearboxes S										
Size	**09**		**19**		**29**					
Lubricated for life	✓		✓		✓					

[1)] Helical worm gearboxes for all mounting positions are equipped with a pressure breather valve.

© Siemens AG 2017

Pressure breather valve

Gearboxes from size 39 are supplied with an installed pressure breather valve; this is suitable for both indoors and outdoors use.

Gearbox sizes 19 and 29 can be operated in mounting positions M1, M3, M5 and M6 without requiring a pressure breather valve. For mounting positions M2 and M4, they are equipped with a pressure breather valve.

A stainless-steel version of the pressure breather valve is also available for use in special ambient conditions.

Order code:

Pressure breather valve	**G45**
Pressure breathe valve, stainless steel	**G49**

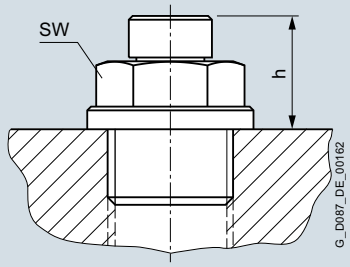

Fig. 10/15 Pressure breather valve

Technical specifications

Size	Width across flats	Thread	Dimension h
	SW		mm
Helical gearboxes Z and D			
19, 29	12	G 1/8 A	15
39	12	G 1/8 A	15
49 … 79	13	G 1/4 A	15
89 ... 129	17	G 3/8 A	15
149 ... 189	24	G 3/4 A	18
Helical gearboxes E			
39	12	G 1/8 A	15
49 … 69	13	G 1/4 A	15
89 ... 129	17	G 3/8 A	15
149	24	G 3/4 A	18
Parallel shaft gearboxes F			
29	12	G 1/8 A	15
39	12	G 1/8 A	15
49 … 79	13	G 1/4 A	15
89 ... 129	17	G 3/8 A	15
149 ... 189	24	G 3/4 A	18
Bevel gearboxes B			
19, 29	12	G 1/8 A	15
39	12	G 1/8 A	15
49	13	G 1/4 A	15
Bevel gearboxes K			
39	12	G 1/8 A	15
49 … 89	13	G 1/4 A	15
109 ... 129	17	G 3/8 A	15
149 ... 189	24	G 3/4 A	18
Helical worm gearboxes C			
29	12	G 1/8 A	15
39	12	G 1/8 A	15
49 … 89	13	G 1/4 A	15

© Siemens AG 2017

Venting

Oil expansion unit

The oil expansion unit increases the expansion space for the lubricant. For certain types of construction and at high operating temperatures, this avoids that lubricant escapes.

The oil expansion unit is supplied as a mounting kit, and can be mounted onto the geared motor vertically or at an angle.

Order code:

Oil expansion unit	**G47**

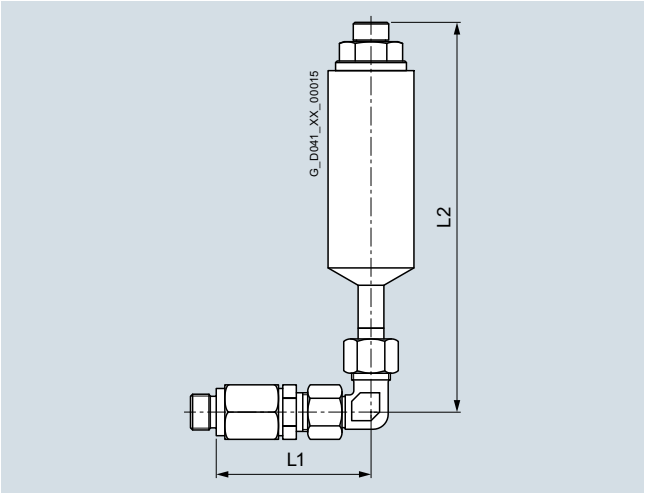

Fig. 10/16 Oil expansion unit type 1

Technical specifications

Size	Motor frame size	Width across flats	Thread	Dimension L1	Dimension L2
		SW		mm	mm
Helical gearboxes Z and D					
39	63 ... 90	22	G1/8A	69.5	155
	100 ... 112			82.5	
49 ... 69	63 ... 90	19/22	G1/4A	42	155
	100 ... 112			71.5	
	132			93.5	
79	80 ... 90	19/22	G1/4A	42	155
	100 ... 132			71.5	
	160			93.5	
89	100 ... 132	22	G3/8A	42.5	155
	160			71.5	
	180			105.0	
Helical gearboxes E					
39	63 ... 90	22	G1/8A	69.5	155
	100 ... 112			82.5	
49	63 ... 90	19/22	G1/4A	42	155
	100 ... 112			71.5	
	132			93.5	
69	71 ... 90	19/22	G1/4A	42	155
	100 ... 112			71.5	
	132 ... 160			93.5	
89	100 ... 132	22	G3/8A	42.5	155
	160			71.5	
	180			105	
Parallel shaft gearboxes F					
39	63 ... 90	22	G1/8A	69.5	155
	100 ... 112			82.5	
49 ... 69	63 ... 90	19/22	G1/4A	42	155
	100 ... 112			71.5	
	132			93.5	
79	80 ... 90	19/22	G1/4A	42.5	155
	100 ... 132			71.5	
	160			93.5	
89	100 ... 132	22	G3/8A	42.5	155
	160			71.5	
	180			105	

Size	Motor frame size	Width across flats	Thread	Dimension L1	Dimension L2
		SW		mm	mm
Bevel gearboxes B					
29	63 ... 90	22	G1/8A	69.5	155
	100			82.5	
39	63 ... 90	22	G1/8A	69.5	155
	100 ... 112			82.5	
49	63 ... 90	19/22	G1/4A	42	155
	100 ... 112			71.5	
	132			93.5	
Bevel gearboxes K					
39	63 ... 90	22	G1/8A	69.5	155
	100 ... 112			82.5	
49	63 ... 90	19/22	G1/4A	42	155
	100 ... 112			71.5	
69	71 ... 90	19/22	G1/4A	42	155
	100 ... 112			71.5	
	132			93.5	
79	71 ... 90	19/22	G1/4A	42	155
	100 ... 132			71.5	
89	80 ... 132	19/22	G1/4A	71.5	155
	160			93.5	
109	100 ... 132	22	G3/8A	42.5	155
	160			71.5	
	180			105	
Helical worm gearboxes C					
49 ... 69	63 ... 90	19/22	G1/4A	42	155
	100 ... 112			71.5	
	132			93.5	
89	80 ... 90	19/22	G1/4A	71.5	155
	100 ... 132			71.5	
	132			93.5	

© Siemens AG 2017

Oil expansion unit (continued)

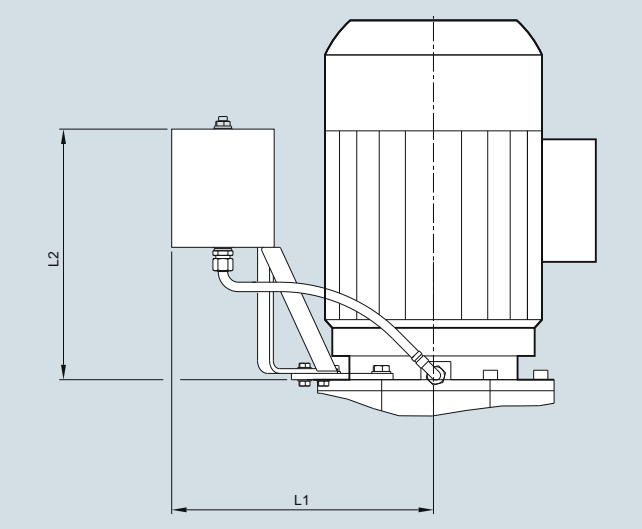

Fig. 10/17 Oil expansion unit type 2

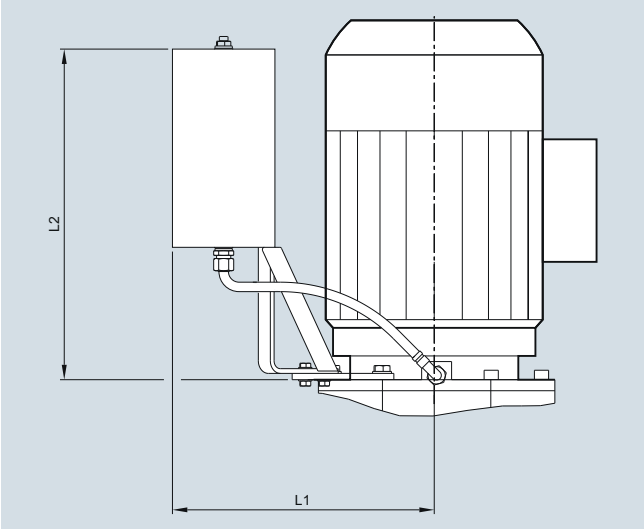

Fig. 10/18 Oil expansion unit type 3

Technical specifications

Size	Motor frame size	Type	Thread	Dimension L1	Dimension L2
				mm	mm
Helical gearboxes Z and D					
109	90 ... 225	2	G3/8A	406	334
129	90 ... 250	2	G3/8A	442	334
149	100 ... 250	3	G3/4A	465	505
169	112 ... 250	3	G3/4A	493	505
189	112 ... 250	3	G3/4A	493	505
Helical gearboxes E					
109	90 ... 225	2	G3/8A	406	334
129	90 ... 250	2	G3/8A	442	334
149	100 ... 250	3	G3/4A	465	505
Parallel shaft gearboxes F					
109	90 ... 225	2	G3/8A	406	334
129	90 ... 250	2	G3/8A	442	334
149	100 ... 250	3	G3/4A	465	505
169	112 ... 250	3	G3/4A	493	505
189	112 ... 250	3	G3/4A	493	505
Bevel gearboxes K					
129	90 ... 225	2	G3/8A	442	334
149	90 ... 250	2	G3/4A (G3/8A)	465	334
169	100 ... 250	3	G3/4A	493	505
189	112 ... 250	3	G3/4A	493	505

Value in parenthesis applies to mounting position M4.

© Siemens AG 2017

Oil level control

Oil level checking screw

For sizes 49 and higher, the oil level is checked using the oil level checking screw.

The oil sight glass is available with a reflector to facilitate visual monitoring.

Order code:

Oil sight glass with reflector	**G34**

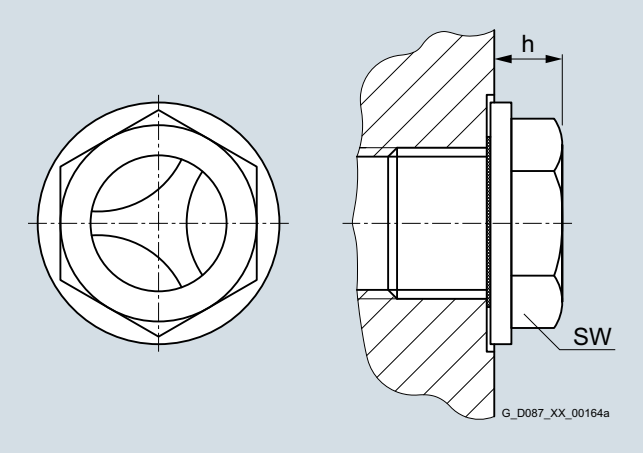

Fig. 10/19 Oil sight glass

Technical specifications

Size	Width across flats	Thread	Dimension h
	SW		mm
Helical gearboxes Z and D			
49 … 79	16	G 1/4 A	10
89 ... 129	19	G 3/8 A	9
149 ... 189	24	G 3/4 A	10
Helical gearboxes E			
49 … 69	16	G 1/4 A	10
89 129	19	G 3/8 A	9
149	24	G 3/4 A	10
Parallel shaft gearboxes F			
49 … 79	16	G 1/4 A	10
89 ... 129	19	G 3/8 A	9
149 ... 189	24	G 3/4 A	10
Bevel gearboxes B			
49	16	G 1/4 A	10
Bevel gearboxes K			
49 … 89	16	G 1/4 A	10
109 ... 129	19	G 3/8 A	9
149 ... 189	24	G 3/4 A	10
Helical worm gearboxes C			
49 … 89	16	G 1/4 A	10

Oil drain

10

Magnetic oil drain screw

For gearboxes from size 39, a magnetic oil drain screw is available that is inserted in the oil drain hole. This serves to collect any metal particles in the gearbox oil.

Order code:

Magnetic oil drain screw	**G53**

Oil drain valve

For gearboxes from size 39, an oil drain valve is available in either a straight or angled design.

The oil drain valve is supplied complete with screw plug as a kit.

Order code:

Oil drain valve, straight	**G54**
Oil drain valve, angled	**G55**

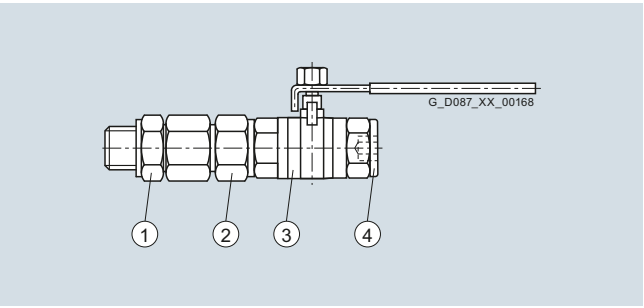

Fig. 10/20 Oil drain valve, straight

① Oil drain valve, straight
② Screw gland
③ Screw gland
④ Screw plug

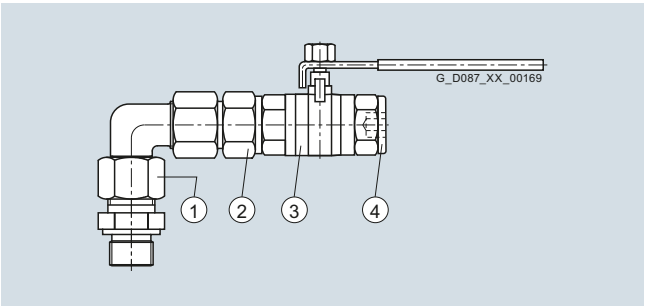

Fig. 10/21 Oil drain valve, angled

① Oil drain valve, angled
② Screw gland
③ Screw gland
④ Screw plug

© Siemens AG 2017

Electrical oil level monitoring system

If the area in which the gearbox is installed is difficult to access, the gearbox oil level will need to be monitored remotely by means of a capacitive sensor.

The capacitive sensor is supplied with a 2 m long cable. The oil level can be monitored only when the gearbox is stationary (i.e. monitoring prior to startup).

A disconnector approved for use in ATEX applications must be provided for explosion-proof (ATEX) gearboxes. This must be installed outside the hazardous area.

Order code:

Oil level sensor	**G37**
Oil level sensor ATEX version	**G38**
230 V disconnector	**G40**

The electrical oil level monitoring system is available for the following gearboxes

Size	Mounting position					
	M1	M2	M3	M4	M5	M6
Helical gearboxes Z						
89... 169	✓	✓	✓	✓	✓	✓
189		✓			✓	✓
Helical gearboxes D						
89	✓	✓	✓	✓	✓	
109 ... 169	✓	✓	✓	✓	✓	✓
189		✓			✓	✓
Helical gearboxes E						
89	✓	✓	✓	✓		
109	✓	✓		✓		
129 149	✓	✓	✓	✓	✓	✓
Parallel shaft gearboxes F						
89 ... 189	✓	✓	✓	✓	✓	✓
Bevel gearboxes K						
109 ... 189	✓	✓	✓	✓	✓	✓

The ATEX version of the electrical oil level monitoring system is available for the following gearboxes

Size	Mounting position					
	M1	M2	M3	M4	M5	M6
Helical gearboxes Z/ZB						
89... 129		✓			✓	✓
149		✓		✓	✓	✓
169	✓	✓	✓	✓	✓	✓
Helical gearboxes ZF						
89... 149		✓		✓	✓	✓
169	✓	✓	✓	✓	✓	✓
Helical gearboxes D/DB						
89		✓			✓	
109 ... 129		✓			✓	✓
149		✓		✓	✓	
169	✓	✓	✓	✓	✓	
Helical gearboxes DF						
89		✓		✓	✓	
109 ... 129		✓		✓	✓	✓
149		✓		✓	✓	
169	✓	✓	✓	✓	✓	
Helical gearboxes E						
89				✓		
109		✓				
129	✓		✓	✓		
149	✓	✓	✓	✓	✓	✓
Parallel shaft gearboxes F						
89 ... 129		✓		✓	✓	✓
149	✓	✓	✓	✓	✓	✓
169 ... 189		✓		✓	✓	✓
Bevel gearboxes K						
109	✓		✓		✓	
129	✓	✓	✓	✓	✓	
149 ... 189	✓	✓	✓	✓	✓	✓

© Siemens AG 2017

Reduced-backlash version

Gearboxes with reduced-backlash are required to perform high-precision positioning tasks. Reduced backlash is essential in ensuring high-quality control performance and accurate position information. A minimal torsional backlash also has a favorable effect on torque spikes during startup and on load switching in the drive train.

The torsional backlash of a geared motor depends on several factors. The total torsional backlash is influenced above all by the circumferential backlash. In addition to the standard versions, reduced-backlash versions of SIMOGEAR geared motors are also available. Thanks to the overall concept and the plug-on pinion system, motors with lower torsional backlash values can be supplied.

To ensure that the entire driven machine can be designed with minimum possible backlash, it is advisable to select the solution with integral motor mounting (without adapter), output shafts with shrink disk connection or with smooth shafts (without feather key). In this case, only backlash-free power transmission elements should be used.

The specified torsional backlash in minutes of the angle [’] is based on the maximum rotation angle of the output shaft (no load, max. 1 % of rated output torque) with stationary input shaft.

For the exact values, refer to the torque tables. If no values are specified in the tables, this means that a reduced-backlash version is not available for the specific version.

The dimensions of the reduced-backlash gearboxes are identical to those of the standard versions.

Order code:

Reduced-backlash version	**G99**

The following gearboxes are available in reduced-backlash versions

Gearbox	**Size**													
	09	19	29	39	49	59	69	79	89	109	129	149	169	189
Helical gearboxes Z and D		✓	✓	✓	✓	✓	✓	✓	✓	✓	✓	✓	✓	✓
Helical gearboxes E	On request													
Parallel shaft gearboxes F			✓	✓	✓		✓	✓	✓	✓	✓	✓	✓	✓
Bevel gearboxes B		✓	✓	✓	✓									
Bevel gearboxes K				✓	✓		✓	✓	✓	✓	✓	✓	✓	✓
Helical worm gearboxes C	Not possible													
Worm gearboxes S	Not possible													

Shrink-glued output gearwheel

The gearbox output stage is subjected to particular high levels of mechanical stress during rigorous reversing duty or acceleration of high mass moments of inertia. The strength of the shaft/hub connection can be further increased by the option "shrink-glued output gearwheel".

Order code:

Shrink-glued output gearwheel	**G97**

© Siemens AG 2017

Motor options

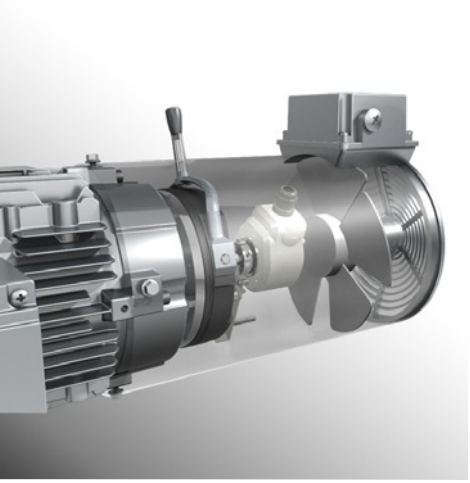

11/2 Electrical design

Voltages and frequencies
11/2 Duty types
11/2 Standard voltages

Motor protection
11/4 Temperature sensor
11/4 Temperature switch
11/5 KTY 84-130 temperature sensor
11/5 1× PT100 resistance thermometer
11/6 Selection and ordering data
11/6 Anti-condensation heating

Windings and insulation
11/7 Inverter operation
11/7 Impulse Voltage Insulation Class (IVIC) – category C (strong)
11/7 Example of how to design a drive system
11/8 DURIGNIT IR 2000 insulation
11/8 Temperature class
11/8 Increased air humidity/temperature with 30 to 60 g water per m^3 of air

11/9 Mechanical design

Degrees of protection
11/9 Overview

Cooling and ventilation
11/9 Self ventilation
11/10 Forced ventilation

Motor connection and terminal boxes
11/11 Connection, circuit and terminal boxes

Motor plug
11/16 Overview
11/16 HAN 10E motor plug
11/17 HAN K4/4 motor plug
11/19 HAN Q8 motor plug
11/21 HAN Q8 motor plug with cable
11/23 HAN Q12 motor plug

11/24 Mounted components

Brake
11/24 Overview
11/24 Design and principle of operation
11/25 Selecting the brake
11/26 Connecting the brake
11/26 Supply voltages
11/27 Brake control
11/28 Function rectifier
11/30 Brake options
11/35 Technical specifications

Encoder
11/40 Overview

Incremental encoders
11/41 • Incremental encoder 1XP8012
11/42 • Incremental encoder 1XP8032
11/43 • Incremental encoder 1XP8022

Resolvers
11/44 • Resolvers 1XP8013 and 1XP8023

Absolute encoders
11/45 • Absolute encoders 1XP8014 and 1XP8024
11/46 • Absolute encoder 1XP8024-21

Rugged encoders
11/47 • Rotary pulse encoder LL 861 900 220
11/47 • Rotary pulse encoder HOG9 D 1024 I
11/48 • Rotary pulse encoder HOG10 D 1024 I

Functionally safe rotary encoder
11/49 • Incremental encoder IN 8.5834
11/51 • Absolute encoder IA 8.5883

11/54 Mechanical protection
11/56 Motors prepared for encoder mounting
11/56 MOTION-CONNECT signal cables

Encoder accessories
11/57 • Connection system
11/57 • Technical specifications
11/58 • Connector
11/58 • Cable with end sleeves
11/59 • Cable with coupling socket
11/60 • EnDAT gateways for absolute encoders
11/60 • Application terminal box for sensors
11/61 • Modular system in combination with encoder systems

11/62 Backstop
11/63 Second shaft extension and handwheel
11/64 Hexagonal recess
11/64 Canopy

11/65 Designs for special environmental conditions

11/65 Condensation drain hole
11/65 Internal motor corrosion protection

© Siemens AG 2017

Voltages and frequencies

Duty types

The three-phase AC motors are designed for duty type S1 according to IEC 60034 (continuous duty).

For inverter operation, the motors with the applicable voltages are also stamped with duty type Inv. Duty.

With IE2 motors with power rating 0.75 kW and above, the notice "IE2 Inv. Duty only" is also attached to the motor.



Order code:

Duty type S1//Inv. Duty	**P91**
Duty type S3 - 75 %	**P90**
Duty type Inv. Duty	**P92**

Standard voltages

The three-phase motors are available with rated voltages from 200 up to 690 V.

Motor frame sizes 63 up to 112 are generally supplied for the voltage range 230/400 V at 50 Hz.

For motor frame sizes from 132 and above, the standard version is 400/690 V at 50 Hz.

At the customer's request, we can stamp a tolerance of ±10 % on the rating plate for a number of our standard voltages.

Order code:

Voltage tolerance ±10 %	**P80**

The following table lists the standard voltages and indicates those for which a ±10 % voltage tolerance can be stamped on the rating plate.

Standard motor voltages

Frequency	Voltages	Power	Possible specifications					Motor frame size												Article No.	Supplement Article No.	Voltage tolerance ± 10 %
Hz	V		CE	UL-R/ CSA	China	EAC	Export[1]	63	71	80	90	100	112	132	160	180	200	225	250	13th data position		P80
Voltages for 50/60 Hz																						
Voltages for 50/60 Hz, 50 Hz power																						
50 Hz	230 V Δ/400 V Y	P_{50}	✓ [4]	✓	✓ [2] [4]	✓ [4]	✓ [4]	✓	✓	✓	✓	✓	✓	-	-	-	-	-	-	4		✓
60 Hz	460 V Y	P_{50}																				
50 Hz	230 V Δ/400 V Y [4]	P_{50}	✓	✓	✓	✓	✓	-	-	-	-	-	-	✓	✓	✓	✓	✓	✓	9	N3A	-
60 Hz	460 V Y [4]	P_{50}																				
50 Hz	400 V Δ/690 V Y [4]	P_{50}	✓		✓	✓	✓	-	-	-	-	-	-	✓	✓	✓	✓	✓	✓	4		✓
60 Hz	460 V Δ [4]	P_{50}																				
50 Hz	400 V Δ/690 V Y	P_{50}	✓		✓ [3] [4]	✓	✓ [4]	✓	✓	✓	✓	✓	✓	-	-	-	-	-	-	9	N3B	✓
60 Hz	460 V Δ	P_{50}																				
50 Hz	220 V Δ/380 V Y [4]	P_{50}	✓	✓	✓ [2]	✓	✓	-	-	✓	✓	✓	✓	✓	✓	✓	✓	✓	✓	9	N3C	✓
60 Hz	440 V Y [4]	P_{50}																				
Voltages for 50/60 Hz, 60 Hz power																						
50 Hz	230 V Δ/400 V Y	P_{50}	✓	✓	✓	✓	✓	✓	✓	✓	✓	✓	✓	-	-	-	-	-	-	2		✓
60 Hz	460 V Y	P_{60}																				
50 Hz	230 V Δ/400 V Y	P_{50}	✓	✓	✓ [4]	✓ [4]	✓ [4]	-	-	-	-	-	-	✓	✓	✓	✓	✓	✓	9	N2A	✓
60 Hz	460 V Δ	P_{60}																				
50 Hz	400 V Δ/690 V Y [4]	P_{50}	✓	✓	✓	✓	✓	-	-	-	-	-	-	✓	✓	✓	✓	✓	✓	2		✓
60 Hz	460 V Δ [4]	P_{60}																				
50 Hz	400 V Δ/690 V Y	P_{50}	✓	✓	✓ [3] [4]	✓	✓ [4]	✓	✓	✓	✓	✓	✓	-	-	-	-	-	-	9	N2B	✓
60 Hz	460 V Δ	P_{60}																				
50 Hz	220 V Δ/380 V Y	P_{50}	✓	✓	✓	✓	✓	✓	✓	✓	✓	✓	✓	✓	✓	✓	✓	✓	✓	9	N2C	✓
60 Hz	440 V Y	P_{60}																				

■ With additional price

1) With motor power 0.75 kW or higher.
2) Can be selected for motor frame size 80 or higher.
3) Can be selected for motor frame size 100 or higher.
4) Cannot be selected for worm gearboxes S.

© Siemens AG 2017

Standard voltages (continued)

Standard motor voltages

Frequency	Voltages	Power	Possible specifications					Motor frame size												Article No. Supplement Article No.		Voltage tolerance ± 10 %
Hz	V		CE	UL-R/ CSA	China	EAC	Export [1]	63	71	80	90	100	112	132	160	180	200	225	250	13th data position		P80
Voltages for 50 Hz																						
50 Hz	500 V Y	P_{50}	✓			✓	✓	✓	✓	✓	✓	✓	✓	✓	✓	✓	✓	✓	✓	9	N1C	-
50 Hz	500 V Δ [4]	P_{50}	✓			✓	✓	-	-	-	-	✓	✓	✓	✓	✓	✓	✓	✓	9	N1D	-
50 Hz	220 V Δ/380 V Y	P_{50}	✓		✓ [3] [4]	✓	✓	■	■	■	■	■	■	■	■	■	■	■	■	9	N1R	✓
50 Hz	380 V Δ/660 V Y	P_{50}	✓		✓ [3] [4]	✓	✓	■	■	■	■	■	■	■	■	■	■	■	■	9	N1S	✓
50 Hz +3/-5 %	240 V Δ/415 V Y	P_{50}	✓			✓	✓	■	■	■	■	■	■	■	■	■	■	■	■	9	N1T	✓
50 Hz +3/-5 %	415 V Δ	P_{50}	✓			✓	✓	■	■	■	■	■	■	■	■	■	■	■	■	9	N1U	✓
50 Hz	200 V Δ	P_{50}	✓			✓	✓	■	■	■	■	■	■	■	■	■	■	■	■	9	N1K	-
Voltages for 60 Hz																						
Voltages for 60 Hz, 50 Hz power																						
60 Hz	220 V Δ/380 V Y	P_{50}	✓			✓		■	■	■	■	■	■	■	■	■	■	■	■	9	N4C	-
60 Hz	380 V Δ/660 V Y	P_{50}	✓			✓		■	■	■	■	■	■	■	■	■	■	■	■	9	N4D	-
60 Hz	440 V Y	P_{50}	✓			✓		■	■	■	■	■	■	■	■	■	■	■	■	9	N4E	-
60 Hz	440 V Δ	P_{50}	✓			✓		■	■	■	■	■	■	■	■	■	■	■	■	9	N4F	-
60 Hz	460 V Y	P_{50}	✓	✓		✓		■	■	■	■	■	■	■	■	■	■	■	■	9	N4H	✓
60 Hz	460 V Δ	P_{50}	✓	✓		✓		■	■	■	■	■	■	■	■	■	■	■	■	9	N4J	✓
60 Hz	575 V Y	P_{50}	✓	✓		✓		■	■	■	■	■	■	■	■	■	■	■	■	9	N4L	✓
60 Hz	575 V Δ [4]	P_{50}	✓	✓		✓		-	-	-	-	■	■	■	■	■	■	■	■	9	N4M	✓
60 Hz	230 V YY/460 V Y	P_{50}	✓	✓		✓		■	■	■	■	■	■	■	■	■	■	■	■	9	N4N	✓
60 Hz	230 V Δ/400 V Y	P_{50}	✓			✓		■	■	■	■	■	■	■	■	■	■	■	■	9	N4A	-
60 Hz	400 V Δ/690 V Y	P_{50}	✓			✓		■	■	■	■	■	■	■	■	■	■	■	■	9	N4B	-
60 Hz	200 V Δ	P_{50}	✓			✓		■	■	■	■	■	■	■	■	■	■	■	■	9	N4P	-
60 Hz	208 V Δ	P_{50}	✓			✓		■	■	■	■	■	■	■	■	■	■	■	■	9	N4Q	-
Voltages for 60 Hz, 60 Hz power																						
60 Hz	220 V Δ/380 V Y	P_{60}	✓			✓		■	■	■	■	■	■	■	■	■	■	■	■	9	N5C	-
60 Hz	380 V Δ/660 V Y	P_{60}	✓			✓		■	■	■	■	■	■	■	■	■	■	■	■	9	N5D	-
60 Hz	440 V Y	P_{60}	✓			✓		■	■	■	■	■	■	■	■	■	■	■	■	9	N5E	-
60 Hz	440 V Δ	P_{60}	✓			✓		■	■	■	■	■	■	■	■	■	■	■	■	9	N5F	-
60 Hz	460 V Y	P_{60}	✓	✓		✓		✓	✓	✓	✓	✓	✓	✓	✓	✓	✓	✓	✓	9	N5H	✓
60 Hz	460 V Δ	P_{60}	✓	✓		✓		✓	✓	✓	✓	✓	✓	✓	✓	✓	✓	✓	✓	9	N5J	✓
60 Hz	575 V Y	P_{60}	✓	✓		✓		■	■	■	■	■	■	■	■	■	■	■	■	9	N5L	✓
60 Hz	575 V Δ [4]	P_{60}	✓	✓		✓		-	-	-	-	■	■	■	■	■	■	■	■	9	N5M	✓
60 Hz	230 V YY/460 V Y	P_{60}	✓	✓		✓		■	■	■	■	■	■	■	■	■	■	■	■	9	N5N	✓
Motor voltages for inverter operation																						
50 Hz	400 V Y	P_{50}	✓		✓ [3] [4]	✓		✓	✓	✓	✓	✓	✓	✓	✓	✓	✓	✓	✓	9	N6B	✓
50 Hz	400 V Δ [4]	P_{50}	✓		✓ [3]	✓		✓	✓	✓	✓	✓	✓	✓	✓	✓	✓	✓	✓	9	N6C	✓
50/87 Hz	230 V Δ/400 V Δ	P_{50}/P_{87}	✓		✓ [3] [4]	✓		✓	✓	✓	✓	✓	✓	✓	✓	✓	✓	✓	✓	9	N6A	✓
Voltages for brake motors with function rectifier [4]																						
50 Hz	400 V Y	P_{50}	✓			✓		✓	✓	✓	✓	✓	✓	✓	✓	✓	✓	-	-	9	N6B	✓
50 Hz	400 V Δ	P_{50}	✓			✓		✓	✓	✓	✓	✓	✓	✓	✓	✓	✓	-	-	9	N6C	✓
60 Hz	440 V Δ	P_{50}	✓			✓		✓	✓	✓	✓	✓	✓	✓	✓	✓	✓	-	-	9	N4G	On request
60 Hz	440 V Δ	P_{60}	✓			✓		✓	✓	✓	✓	✓	✓	✓	✓	✓	✓	-	-	9	N5G	On request
60 Hz	460 V Δ	P_{50}	✓			✓		✓	✓	✓	✓	✓	✓	✓	✓	✓	✓	-	-	9	N4K	On request
60 Hz	460 V Δ	P_{60}	✓			✓		✓	✓	✓	✓	✓	✓	✓	✓	✓	✓	-	-	9	N5K	On request

■ With additional price

1) With motor power 0.75 kW or higher.
2) Can be selected for motor frame size 80 or higher.
3) Can be selected for motor frame size 100 or higher.
4) Cannot be selected for worm gearboxes S.

© Siemens AG 2017

Temperature sensor

The temperature sensor is a **positive temperature coefficient** (PTC) thermistor which offers comprehensive protection against thermal motor overload. The temperature of the winding can be accurately monitored thanks to its low thermal capacity and the excellent heat contact with the winding. The PTC thermistor exhibits a sudden change in resistance when a rated response temperature is reached.

A tripping unit is used to evaluate the change in resistance and to open auxiliary circuits via auxiliary contacts.

The switching hysteresis of the PTC thermistor is low, which facilitates fast restarting of the drive. Motors with this type of protection are recommended for heavy duty starting, switching duty, extreme changes in load, high ambient temperatures or fluctuating supply systems.

In order to prevent serious damage by impulse voltage peaks to the sensor and the downstream evaluation electronic circuitry which can occur in inverter operation as a result of the close contact between PTC thermistor and winding, the connecting cables and the PTC thermistor have reinforced insulation designed to provide "protective separation".

Order code:

PTC thermistor for disconnection	**M10**
PTC thermistor for warning and disconnection [1]	**M11**

[1] Not possible for worm geared motors S

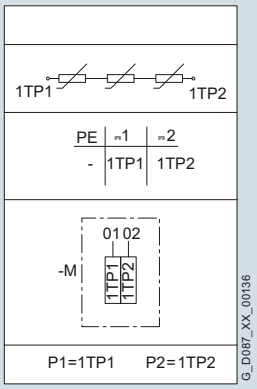

Fig. 11/1 Connection circuit diagram

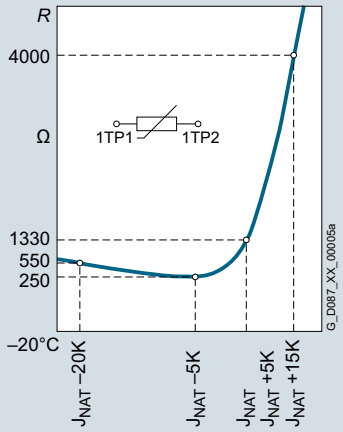

Fig. 11/2 Temperature sensor characteristic

Temperature switch

The temperature switch is a **winding thermostat** (NC contact) and is suitable as a protection device for slowly increasing motor temperatures. When the rated response temperature is reached, it can open an auxiliary circuit. When the motor temperature decreases, the winding thermostat closes again as soon as the temperature falls significantly below the rated response temperature.

When the motor current rises quickly (e.g. with a locked rotor), these switches are not suitable due to their large thermal time constants.

The temperature switch provides safety isolation in accordance with EN 61800-5-1 up to max. 500 V.

The temperature switch is not compatible with the functionally safe rotary encoder.

Order code:

Winding thermostat for disconnection	**M12**
Winding thermostat for warning and disconnection [1]	**M13**

[1] Not possible for worm geared motors S

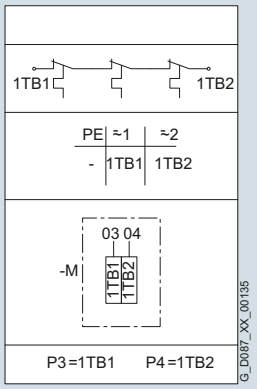

Fig. 11/3 Connection circuit diagram

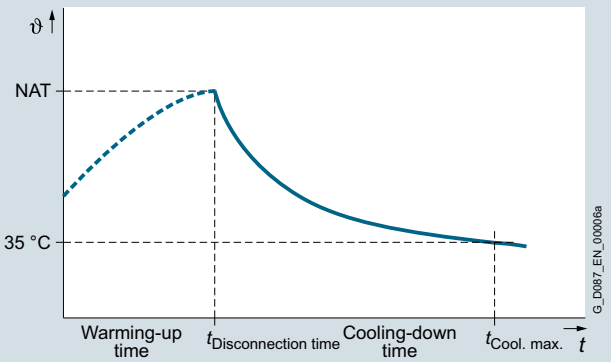

Fig. 11/4 Temperature switch characteristic

© Siemens AG 2017

KTY 84-130 temperature sensor

This sensor is a PTC thermistor that changes its resistance depending on the temperature in accordance with a defined curve. The KTY 84-130 temperature sensor can be used for monitoring the motor temperature for inverter operation.

Some inverters determine the motor temperature using the resistance of the temperature sensor. They can be set to a required temperature for warning and disconnection.

In order to prevent serious damage by impulse voltage peaks to the sensor and the downstream evaluation electronic circuitry which can occur in inverter operation as a result of the close contact between temperature sensor and winding, the connecting cables and the temperature sensor have reinforced insulation designed to provide "protective separation".

Order code:

KTY 84-130 temperature sensor [1]	**M16**

[1] Not possible for worm geared motors S

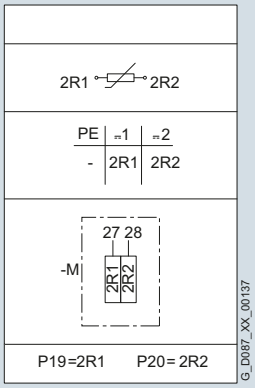

Fig. 11/5 Connection circuit diagram

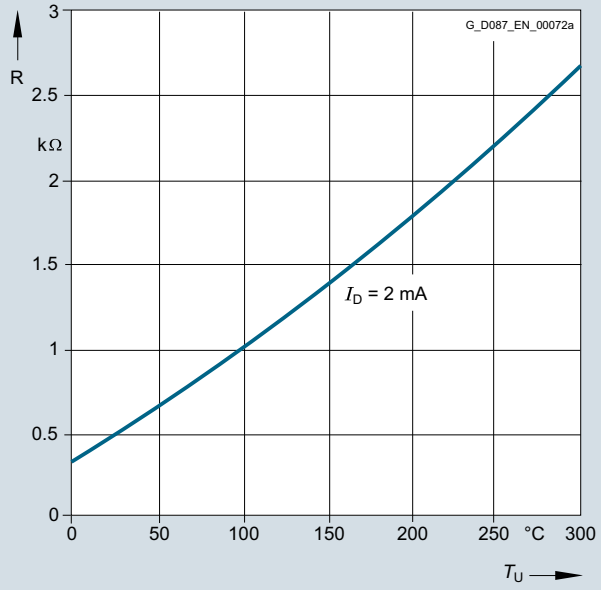

Fig. 11/6 Temperature sensor characteristic

1x PT100 resistance thermometer

This sensor is a PTC thermistor and at 0 °C has a resistance of 100 Ω. Its resistance changes almost linearly in the range between 0 and 100 °C. Changes in temperature are transferred to an evaluation device in the form of resistance changes.

The evaluation device is not included in the scope of supply.

In order to prevent serious damage by impulse voltage peaks to the sensor and the downstream evaluation electronic circuitry which can occur in inverter operation as a result of the close contact between resistance thermometer and winding, the connecting cables and the resistance thermometer have reinforced insulation designed to provide "protective separation".

Order code:

1x PT100 resistance thermometer	**M19**

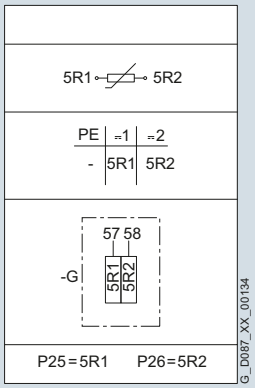

Fig. 11/7 Connection circuit diagram

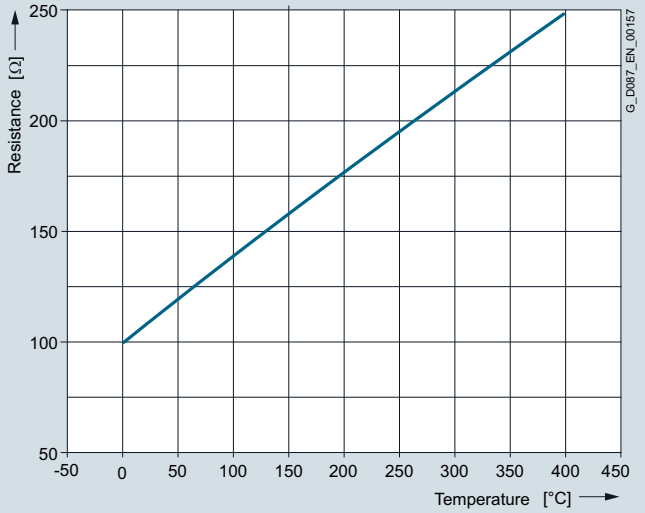

Fig. 11/8 Resistance thermometer characteristic

© Siemens AG 2017

Motor protection

Selection and ordering data

Motor protection	Motor frame size												Order code
	63	71	80	90	100	112	132	160	180	200	225	250	
PTC thermistor disconnection	✓	✓	✓	✓	✓	✓	✓	✓	✓	✓	✓	✓	**M10**
PTC thermistor, warning and disconnection [1]	✓	✓	✓	✓	✓	✓	✓	✓	✓	✓	✓	✓	**M11**
Winding thermostat, disconnection [3]	✓	✓	✓	✓	✓	✓	✓	✓	✓	✓	✓	✓	**M12**
Winding thermostat, warning and disconnection [1] [2] [3]	✓	✓	✓	✓	✓	✓	✓	✓	✓	✓	✓	✓	**M13**
KTY 84-130 temperature sensor [1]	✓	✓	✓	✓	✓	✓	✓	✓	✓	✓	✓	✓	**M16**
1 × PT100 resistance thermometer	✓	✓	✓	✓	✓	✓	✓	✓	✓	✓	✓	✓	**M19**

[1] Not possible for worm geared motors S
[2] Not possible for inverter operation
[3] Not possible for functionally safe rotary encoder

Protective devices

Number of windings	Example	Function	Number of temperature-dependent protective devices	Number of terminals
1	Motors with one pole number	Disconnection	3 or 1 (motor frame sizes 80 and 90)	2
		Warning and disconnection	6	3 (motor frame size 71 to 200)
				4 (motor frame size 225 to 250)

Anti-condensation heating

Motors whose windings are at risk of condensation due to the climatic conditions, e.g. inactive motors in humid atmospheres or motors that are exposed to widely fluctuating temperatures, can be equipped with anti-condensation heaters. Anti-condensation heating must not be switched on during operation.

Instead of an anti-condensation heater, another possibility is to connect a voltage that is approximately 4 to 10 % of the rated motor voltage to stator terminals U1 and V1; 20 to 30 % of rated motor current is sufficient to heat the motor.

Order code:	
115 V anti-condensation heating	**M40**
230 V anti-condensation heating	**M41**

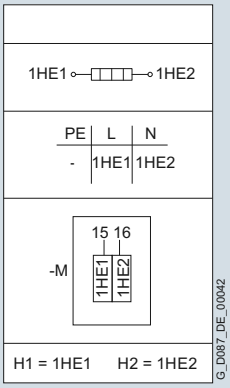

Fig. 11/9 Connection circuit diagram for the anti-condensation heating

Technical specifications

Motor frame size	Heating power
	W
63 … 80 [1]	12.5
90 … 112	25
132 … 200	50
225 ... 250	92

[1] Only possible for worm geared motors S in motor frame size 71

© Siemens AG 2017

Inverter operation

All motors used in SIMOGEAR geared motors are equipped with innovative insulation systems, consisting of high-quality enamel wires and insulating sheet materials in conjunction with highly temperature-resistant impregnations.

The motors can be operated with SINAMICS G and SINAMICS S converters and inverters (controlled and uncontrolled infeed) provided that the permissible voltage peaks listed in the relevant table are not exceeded.

Continuous operation while utilizing the admissible voltage tolerances must be avoided and is not recommended in accordance with IEC 60034-1 2011 Chapter 7.3.

Preferred supply system configurations are TT systems and TN systems with neutral-point grounding. In the case of a fault when connected to an IT supply system (ground fault), the insulation is excessively stressed. In this case, the process should be terminated as quickly as possible (t < 2 h), and the fault resolved. We do not recommend operation on TN supply systems with transition-point grounding.

For motors with brought-out connection cables (**K50** to **K55**), please ask for further information with regard to inverter operation. During installation, the EMC guidelines must be complied with.

Note:

When motors are operated on SINAMICS inverters additional losses occur which, depending on the admissible winding overtemperature, can make it necessary to reduce the torque. The admissible torque values can be obtained from the SIZER engineering tool. The lowest frequency specified there is 5 Hz. For stationary inverter operation at lower frequencies, particularly in the case of frame sizes < 100, it is necessary to inquire at the Quotation Center.

For inverter operation with the outputs specified in the catalog, the motors are used according to temperature class 155 (F), i.e. in this case neither a service factor > 1 nor an increased coolant temperature is possible.

Impulse Voltage Insulation Class (IVIC) – category C (strong)

The insulation system of the motors meets the requirements of EN 60034-18-41:2014 according to the stress category C (strong).

The insulation systems of the motors are optimized for operation on SINAMICS inverters. The admissible voltage peaks specified in the table must not be exceeded.

Thanks to the high-quality insulation systems, the requirements of IVIC C are significantly exceeded; see the comparison in the table. This also means that significantly more stringent requirements can be met by the system operator.

The table below shows a comparison between the maximum admissible peak-peak voltage at the motor terminal as stipulated by EN 60034-18-41 and the peak-peak voltage tolerance of SIMOTICS insulation systems.

	Line voltage U_{rated}			
	400 V		480 V	
Standard	IVIC C	Siemens	IVIC C	Siemens
$\hat{U}_{phase\text{-}ground}$	1 680	2 200	2 016	2 200
$\hat{U}_{phase\text{-}phase}$	2 360	3 000	2 832	3 000

The following applies for the voltage rise time: $T_a > 0.3 \pm 0.2$ µs

The voltages specified are peak-peak values (Vpk/pk).

Example of how to design a drive system for a line voltage of 400 V in compliance with the specifications for the motor and inverter

When SIMOGEAR geared motors are operated on SINAMICS inverters, reflections may cause voltage peaks in excess of the upper tolerance limits. These effects may also be influenced by the design and length of the cables used.

A = standard power cable (NYCWY)
B = power cable with symmetrical shield (e.g. Protoflex)

In the example below, various motor configurations are assessed on the basis of the following general conditions:

- Configuration with a single motor:
  Each motor has its own Motor Module with a separate infeed for each module
- Configuration with multiple motors:
  Each motor has its own Motor Module; these modules are interconnected via a common DC link which is supplied by an Active Line Module combined with an Active Interface Module (AIM).
- TN system U_k = 5 %
- $U_{DC\,Link} = 1.5 \times U_{Line}$ with a modulation depth $ALM_{max} < 0.97$ and $U_{DC,max}$
- Motor Modules in booksize format
- Active Line Module (ALM) with matching Active Interface Module (AIM)
- No parallel connection of Active Line Modules
- Pulse frequencies set to factory defaults

On this basis, the maximum recommended cable lengths [m] are:

Rated power kW	**Rated voltage** U_{Line} = 400 V ± 10 % (DC link voltage $U_{DC\,Link}$ = 640 V_{DC})			
	Multi-motor operation		**Single-motor operation**	
	Cable type A	Cable type B	Cable type A	Cable type B
0.09 ... 4	50 [1]	50 [1]	50 [1]	50 [1]
5.5 ... 7.5	55	70 [1]	70 [1]	70 [1]
11 ... 18.5	50	75	100 [1]	100 [1]
22 ... 45	100 [1]	100 [1]		
55 ... 90	85			

[1] Cable length limitation by SINAMICS Motor Module

Provided that the cables do not exceed the recommended lengths and on the basis of the specified general conditions, it can be assumed that the system will operate in compliance with the product specifications.

Other lengths of cable may be used, but the potential voltage peaks and front times must be checked separately according to the table for compliance with the product specifications.

© Siemens AG 2017

DURIGNIT IR 2000 insulation

The DURIGNIT IR 2000 insulating system consists of high-quality enamel wires and insulating sheet materials in conjunction with temperature-resistant resin impregnation.

This ensures that these motors will have a high mechanical and electrical strength, high service value, and a long service life. The insulating system protects the winding to a large degree against aggressive gases, vapors, dust, oil, and increased air humidity. It can withstand the usual vibration stressing.

Temperature class

All motors are designed for temperature class 155 (F). They are utilized to temperature class 130 (B).

The 4-pole motors can be optionally implemented for temperature class 180 (H). The winding is utilized to temperature class 155 (F).

Order code:

Temperature class 180 (H) [1]	**M08**

[1] Not possible for worm geared motors S

Increased air humidity/temperature with 30 to 60 g water per m³ of air

The motors in the standard range are designed for up to 30 g water per m³. A design for increased air humidity in the range between 30 and 60 g water per m³ air as a function of the temperature is possible, as shown in the following table.

Order code:

Increased air humidity/temperature with 30 to 60 g water per m³ of air [1]	**N54**

[1] Not possible for worm geared motors S

Relative humidity	**Temperature**						
	+20 °C	+30 °C	+40 °C	+50 °C	+60 °C	+70 °C	+80 °C
10 %	2	3	5	8	13	20	29
15 %	3	5	8	12	19	30	44
20 %	3	6	10	17	26	39	58
25 %	4	8	13	21	32	49	
30 %	5	9	15	25	39	59	
35 %	6	11	18	29	45		
40 %	7	12	20	33	52		
45 %	8	14	23	38	58		
50 %	9	15	26	41			
55 %	10	17	28	46			
60 %	10	19	31	50			
65 %	11	20	33	54			
70 %	12	21	36	58			
75 %	13	23	38				
80 %	14	24	41				
85 %	15	26	43				
90 %	16	27	46				
95 %	16	29	49				
100 %	17	30	51				

© Siemens AG 2017

Degrees of protection

Overview

Note:

The degree of protection only applies to the electrical equipment (motor, brake, encoder). Depending on the application area, the applicable measures must be applied to the gearbox.

Available degrees of protection

Degree of protection	Motor options that can be mounted	Order code
IP55	No restrictions	**K01**
IP56 [1]	Possible in conjunction with separately driven fan, incremental encoder and absolute encoder	**K02**
IP65 [1]	Possible in conjunction with a brake, backstop, separately driven fan, incremental encoder, absolute encoder, resolver, and motor plug.	**K03**

[1] Not possible for worm geared motors S

Cooling and ventilation

Overview

The motors have radial-flow fans, which cool regardless of the direction of rotation of the motor (cooling method IC 411, IEC 60034-6). The air flows from the non-drive end (NDE) to the drive end (DE).

Self ventilation

The motor fan can either be a standard fan, metal fan, or high inertia fan.

Fan design

Motor frame size	Fan	Material		Order code
		Fan	Fan cover	
63 ... 90	Standard fan	Plastic	Sheet metal	
	Metal fan	Aluminum	Sheet metal	**M21**
	High inertia fan	Steel core with fan blades made of plastic	Sheet metal	**M22**
100 ... 132	Standard fan	Plastic	Sheet metal	
	Metal fan	Aluminum	Sheet metal	**M21**
	High inertia fan	Cast iron	Sheet metal	**M22**
160	Standard fan	Plastic	Sheet metal	
	Metal fan	Aluminum	Sheet metal	**M21**
180 ... 250	Standard fan	Plastic	Plastic / sheet metal [1]	
	Metal fan	Steel	Plastic / sheet metal [1]	**M21**

[1] The fan cover is made of sheet metal for motors with brake

Standard fan

As standard, the motors are equipped with a plastic fan. This can be used for the entire standard ambient temperature range.

Metal fan

As an alternative to the standard plastic fans, aluminum fans are available for the motors.

Metal fans are used for specific environmental conditions, e.g.:

- If there are solid or dirt particles, such as wood chips, textile fibers in the cooling air
- Special motor designs for increased ambient temperatures exceeding +60 °C

Order code:

Metal fan	**M21**

High inertia fan

When required, 4-pole motors in frame sizes 71 to 132 can be equipped with a high inertia fan.

High inertia fans as an additional inertia are finely balanced according to DIN ISO 1940. Typical applications are drives for traveling gear, conveying equipment, or in general for supporting soft starting and/or soft braking in line operation.

Order code:

High inertia fan [1]	**M22**

[1] Not possible for worm geared motors S

A high inertia fan increases the moment of inertia of the motor according to the table below.

Motor frame size	J_Z 10^{-4} kgm^2	m_{fan} kg
71	17.1	1.38
80	27.9	1.75
90S/90L	54.0	2.55
100L	116.0	3.30
112M	230.0	5.30
132S/132M/132ZM	562.0	9.10

© Siemens AG 2017

Cooling and ventilation

Forced ventilation

Forced ventilation (separately driven fan) can be combined with almost all brakes and encoders as required.

Order code:

Separately driven fan [1]	**M23**

[1] Not possible for worm geared motors S

Technical specifications

Motor frame size	Frequency	Rated voltage range			Rated current	Power consumption	Volume flow	Weight
	Hz	Phase	V	Connection	A	W	m^3/h	kg
71	50	1 AC	230 ... 277	⊥(Δ)	0.10	27.0	78	1.45
		3 AC	220 ... 303/346 ... 525	Δ/Y	0.11/0.06	31.0		
	60	1 AC	230 ... 277	⊥(Δ)	0.12	33.0	98	
		3 AC	220 ... 332/380 ... 575	Δ/Y	0.10/0.06	29.0		
80	50	1 AC	230 ... 277	⊥(Δ)	0.11	29.0	127	1.50
		3 AC	200 ... 303/346 ... 525	Δ/Y	0.11/0.06	31.0		
	60	1 AC	230 ... 277	⊥(Δ)	0.14	37.0	148	
		3 AC	220 ... 332/380 ... 575	Δ/Y	0.10/0.06	34.0		
90	50	1 AC	230 ... 277	⊥(Δ)	0.25	65.0	200	1.90
		3 AC	200 ... 303/346 ... 525	Δ/Y	0.38/0.22	91.0		
	60	1 AC	230 ... 277	⊥(Δ)	0.29	65.0	240	
		3 AC	220 ... 332/380 ... 575	Δ/Y	0.33/0.19	77.0		
100	50	1 AC	230 ... 277	⊥(Δ)	0.28	66.0	260	2.05
		3 AC	200 ... 303/346 ... 525	Δ/Y	0.37/0.22	91.0		
	60	1 AC	230 ... 277	⊥(Δ)	0.30	75.0	310	
		3 AC	220 ... 332/380 ... 575	Δ/Y	0.31/0.18	87.0		
112	50	1 AC	230 ... 277	⊥(Δ)	0.28	71.0	337	2.15
		3 AC	200 ... 303/346 ... 525	Δ/Y	0.35/0.20	97.0		
	60	1 AC	230 ... 277	⊥(Δ)	0.37	94.0	411	
		3 AC	220 ... 332/380 ... 575	Δ/Y	0.31/0.18	103.0		
132	50	1 AC	230 ... 277	⊥(Δ)	0.52	125.0	560	3.00
		3 AC	200 ... 303/346 ... 525	Δ/Y	0.64/0.37	160.0		
	60	1 AC	230 ... 277	⊥(Δ)	0.61	163.0	650	
		3 AC	220 ... 332/380 ... 575	Δ/Y	0.35/0.20	180.0		
160	50	1 AC	230 ... 277	⊥(Δ)	1.05	246.0	980	
		3 AC	200 ... 303 / 346... 525	Δ/Y	1.28 / 0.74	314.0		
	60	1 AC	230 ... 277	⊥(Δ)	1.52	390.0	1170	
		3 AC	220 ... 332 / 380... 575	Δ/Y	1.08 / 0.62	391.0		
180	50	1 AC	230 ... 277	⊥(Δ)	1.05	246.0	1166	8.15
		3 AC	200 ... 303 / 346... 525	Δ/Y	1.28 / 0.74	314.0		
	60	1 AC	230 ... 277	⊥(Δ)	1.52	390.0	1306	
		3 AC	220 ... 332 / 380... 575	Δ/Y	1.08 / 0.62	391.0		
200	50	1 AC	230 ... 277	⊥(Δ)	1.05	246.0	1331	9.75
		3 AC	200 ... 303 / 346... 525	Δ/Y	1.28 / 0.74	314.0		
	60	1 AC	230 ... 277	⊥(Δ)	1.52	390.0	1586	
		3 AC	220 ... 332 / 380... 575	Δ/Y	1.08 / 0.62	391.0		
225 ... 250	50	3 AC	220 ... 240 / 380 ... 420	Δ/Y	2.0 / 1.15	450.0	On request	22.0
	60		440 ... 480	Y	1.05	520.0		

Modular system in combination with self ventilation and forced ventilation for motor frame size 63 to 200

Cooling method	Motor plug	Encoder							Brake				Back-stop	2nd shaft extension
		Incremental encoder		Absolute encoder		Resolver [3]	Encoder under cover [2]	Encoder accessories	Without manual release	With manual release	Microswitch			
		Functionally safe		Functionally safe										
		no	yes	no	yes						Air flow monitoring [1]	Wear monitoring		
Self ventilation														
Standard fan	✓	✓	✓	✓	✓	✓	✓	✓	✓	✓	✓	On request	✓	✓
Metal fan	✓	✓	✓	✓	✓	✓	✓	✓	✓	✓	✓		✓	✓
High inertia fan [2] [4]	✓	✓	-	✓	-	✓	✓	✓	✓	✓	✓		✓	✓
Canopy	✓	✓	✓	✓	✓	✓	✓	✓	✓	✓	✓		✓	-
Forced ventilation [2] [4]														
Canopy	✓	✓	✓	✓	✓	✓	-	✓	✓	✓	✓	On request	✓	-

[1] Can be selected for brake type L32 or higher
[2] Can be selected for motor frame size 71 or higher
[3] Cannot be combined with brake motor
[4] Not possible for worm geared motors S

© Siemens AG 2017

Connection, circuit and terminal boxes

Location and position of the terminal box

The terminal box of the motor can be mounted in four different locations or positions. The position of the terminal box is always when viewing the drive end (DE) of the motor.

The standard position of the terminal box is on the right-hand side, with the cable entry from below (1A).

The terminal box is always located at the non-drive end (NDE) of the motor.

Selection data, cable entry

Terminal box position	Position of the cable entry	Order code
Motor	**LA63 … 71, LE80 … 160, LES180 ... 250**	
1	A	**M55**
	B	**M56**
	C	**M57**
	D	**M58**
2	A	**M59**
	B	**M60**
	C	**M61**
	D	**M62**
3	A	**M63**
	B	**M64**
	C	**M65**
	D	**M66**
4	A	**M67**
	B	**M68**
	C	**M69**
	D	**M70** [1]

[1] Not possible for worm geared motors S

Terminal box position

When viewing DE

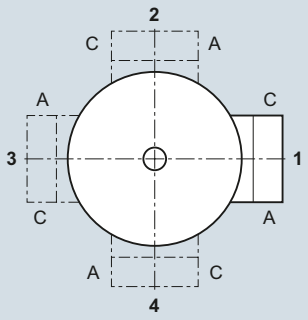

Position of the cable entry

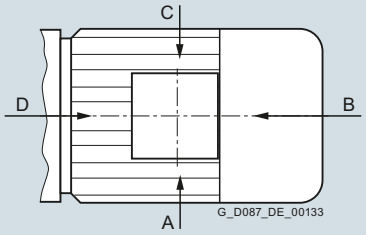

Fig. 11/10 Terminal box position and cable entry

Motor connection

The number of winding ends depends on the winding design. Three-phase AC motors are connected to the three phase conductors L1, L2, and L3 of a three-phase line supply. The motor rated voltage in the operating connection must match the phase conductor voltages of the line supply.

When the three phases operate in sequence and are connected to the terminals of the motor in alphabetical order U1, V1 and W1, the motor rotates clockwise when viewing the DE motor shaft.

The direction of rotation of the motor can be reversed if two connecting cables are interchanged. Labeled terminals are provided to connect the protective conductor.

The connections for a brake, anti-condensation heating or thermal motor protection are also located in the terminal box.

Note:

Different sizes of terminal box are used depending on the connections required.
Additional notes see "Terminal box type" on page 11/14.

© Siemens AG 2017

Connection, circuit and terminal boxes (continued)

Terminal box assignment

Motor frame size	Terminals					Auxiliary terminals	
	Number	Contact screw thread	Max. connectable conductor	Cable entry		Number	Max. connectable conductor
			mm^2	metric	NPT		mm^2
63	6 (9 for YY/Y motor connection)	M4	1.5 (2.5 with cable lug)	1 x M25 x 1.5 + 1 x M20 x 1.5	2 x 1/2"	8	2.5
71							
80							
90							
100			4	2 x M32 x 1.5	3/4" + 1/2"	10	
112							
132			6				
160		M5	16	2 x M40 x 1.5	1 1/4" + 1/2"		
180		M6	25		1 1/2" + 1/2"		
200				2 x M50 x 1.5			
225		M8	35				
		M10	120	2 x M63 x 1.5			
250					2 1/2" + 1/2"		
		M12	240				

Motor connection Δ/Y

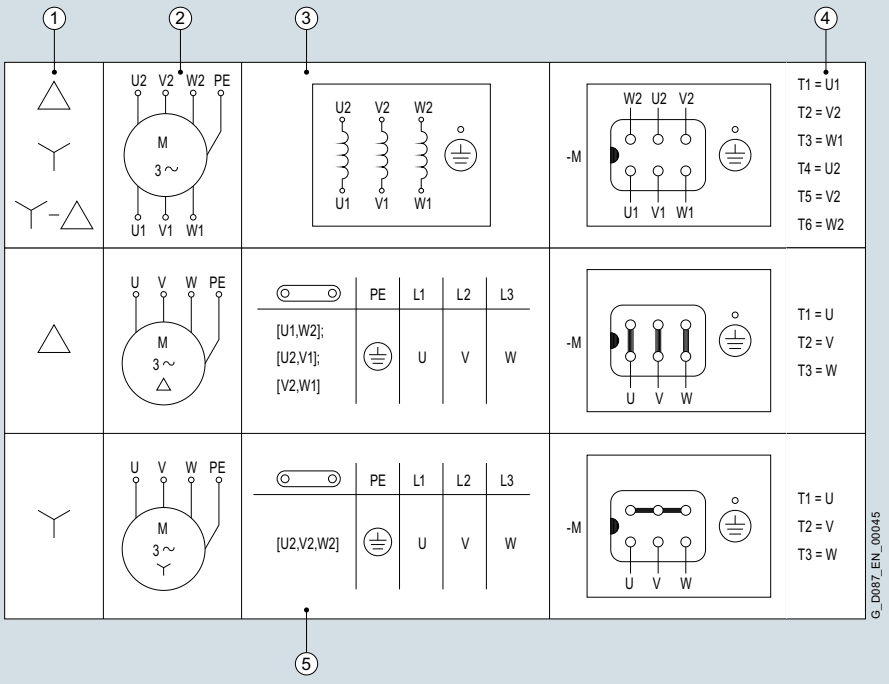

Fig. 11/11 Connection circuit diagram, motor connection Δ/Y

① Motor connection
② Circuit diagram symbols
③ Winding arrangement in the motor
④ Comparison:
Terminal designation acc. to NEMA MG1/acc. to IEC 60034-8
⑤ Location of the jumpers on the terminal board and juxtaposition of the line connection with the motor connection

© Siemens AG 2017

Connection, circuit and terminal boxes (continued)

Motor connection Y

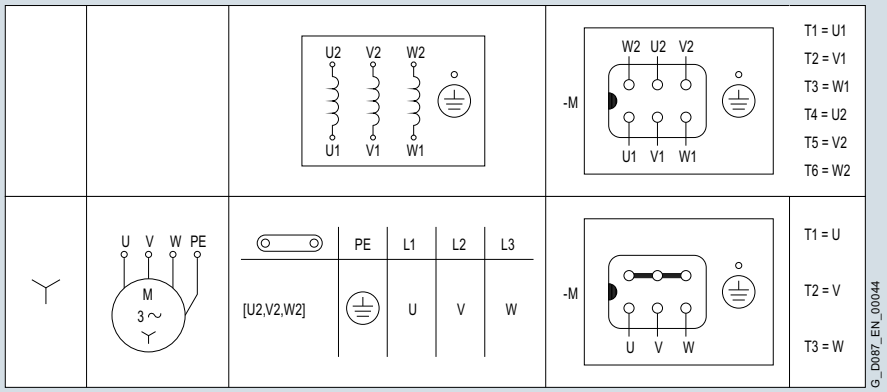

Fig. 11/12 Connection circuit diagram, motor connection Y

Motor connection YY/Y

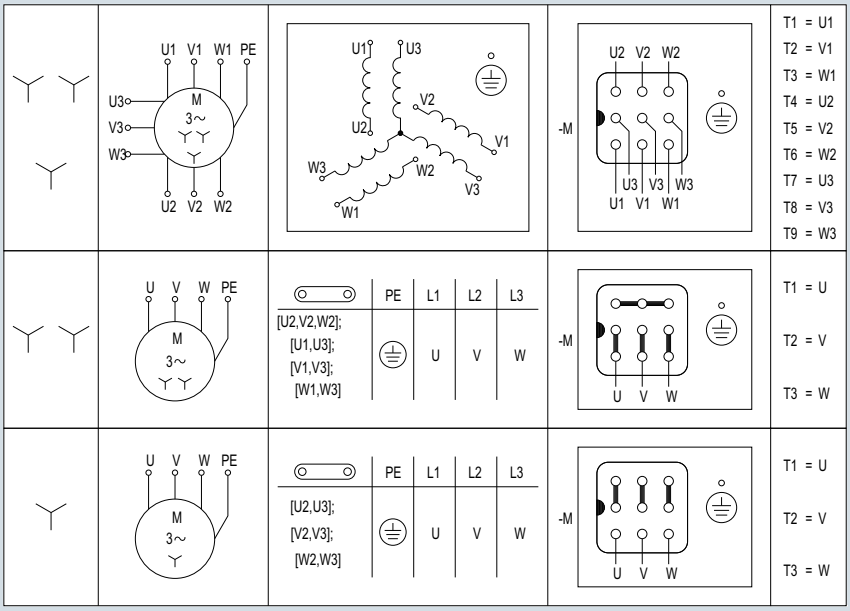

Fig. 11/13 Connection circuit diagram, motor connection YY/Y

Terminal connection

The terminal board accommodates the terminals that are connected to the leads to the motor windings.

The terminals are designed so that up to size 160, the external (line) connections can be established without requiring cable lugs.

Cable entries

Motor frame size	Number of cable entries	Terminal box material	Line feeder cable connection
63 ... 160	2 cable entries with screw plugs	Aluminum alloy	With or without cable lug
180 ... 250	2 cable entries with screw plugs	Cast iron	With cable lug

© Siemens AG 2017

Connection, circuit and terminal boxes (continued)

Terminal box type

The terminal box contains all the electrical connections that are installed in the motor. Different sizes of terminal box are used depending on the connections required.

The dimensions of terminal boxes can be found in chapter "Motors" from page 8/36.



Fig. 11/14 Terminal box type gk030, TB1E00, TB1F00, TB1H00, TB1J00

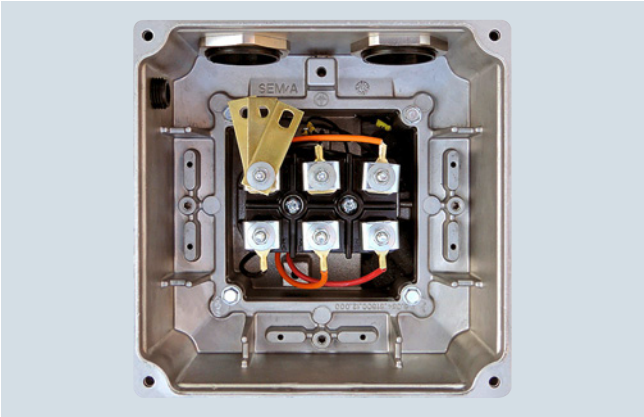

Fig. 11/15 Terminal box type gk127, TB1E10, TB1F10, TB1H10, TB1J10, TB1K01, TB1L01, TB1N01

Cable entry metric

Motor frame size	Motor options				Terminal box type
	Brake	Winding protection	Heating	Application terminal box	
63 ... 71	Without	PTC thermistor for disconnection	Without	Without	gk030 [1]
		Winding thermostat for disconnection			
		KTY 84-130 temperature sensor			
		1x PT100 resistance thermometer			
		Without	With		
	With	No restriction			gk127 [1] [2]
80 ... 90	Without	PTC thermistor for disconnection	No restriction	Without	TB1E00
		Winding thermostat for disconnection			
		KTY 84-130 temperature sensor			
		1x PT100 resistance thermometer			
	With	No restriction			TB1E10
100 ... 112	Without	PTC thermistor for disconnection	No restriction	Without	TB1F00
		Winding thermostat for disconnection			
		KTY 84-130 temperature sensor			
		1x PT100 resistance thermometer			
	With	No restriction			TB1F10
132	Without	PTC thermistor for disconnection	No restriction	Without	TB1H00
		Winding thermostat for disconnection			
		KTY 84-130 temperature sensor			
		1x PT100 resistance thermometer			
	With	No restriction			TB1H10
160	Without	PTC thermistor for disconnection	No restriction	Without	TB1J00
		Winding thermostat for disconnection			
		KTY 84-130 temperature sensor			
		1x PT100 resistance thermometer			
	With	No restriction			TB1J10
180	Without	No restriction			TB1K01
	With				
200	Without	No restriction			TB1L01
	With				
225	Without	No restriction		-	TB1L01
	With			-	TB1N01
250	Without	No restriction		-	TB1N01
	With			-	

[1] For terminal boxes with 9 terminals (circuit YY/Y) terminal box type TB1E10
[2] For brake motors in UL-R and CSA version terminal box type TB1E10

© Siemens AG 2017

Connection, circuit and terminal boxes (continued)

Cable entry NPT

The cable entry with national pipe thread (NPT) can be ordered as an option. The dimensions of terminal boxes can be found in chapter "Motors" from page 8/36.

Order code:

Cable entry NPT	**M45**

Motor frame size	Terminal box type
63 ... 71	gk127 [1) 2)]
80 ... 90	TB1E10
100 ... 112	TB1F10
132	TB1H10
160	TB1J10
180	TB1K01
200 ... 225	TB1L01
250	TB1N01

1) For terminal boxes with 9 terminals (circuit YY/Y) terminal box type TB1E10
2) For brake motors in UL-R and CSA version terminal box type TB1E10

Terminal box cast

Motors can be supplied with the bottom half of the terminal box cast onto the motor housing in order to prevent water ingress into the housing.

In this case, no further changes can be made to the position of the terminal box.

Order code:

Terminal box cast	**M53**

External grounding

IEC 60034 specifies additional external grounding for motors with ratings of 100 kW and higher. For motors, sizes 63 up to 160, this is optionally available.

Motors in sizes 180 to 250 are supplied as standard with external grounding.

Order code:

External grounding	**N53**

Maximum conductor connection for external grounding

Motor frame size	Thread size
63 ... 90	M4
100 ... 112	M5
132 ... 180	M6
200	2 x M6
225 ... 250	2 x M8

Modular system in combination with motor connection and terminal box

Modular system	Encoder system	Brake					Self ventilation Forced ventilation	Backstop	Second shaft extension
		Without	With manual release		Microswitch				
		manual release	Without locking mechanism	With locking mechanism [1)]	Fan monitoring [2)]	Wear monitoring			
Terminal box	✓	✓	✓	✓	✓	On request	✓	✓	✓
Motor plug	✓	✓	✓	✓	-	On request	✓	✓	✓

1) Only manual brake release with locking mechanism can be selected for motor frame sizes 225 and 250.
2) Can be selected for brake type L32 or higher

© Siemens AG 2017

Motor plug

Overview

The motor plug is supplied ready for use, and replaces the terminal box with terminal board.

Motor plugs are also available in an EMC design. A counterplug can also be provided.

In the basic design, the motor plug connection is in position B, see page11/11. The dimensions depend on the motor frame size.

Particularly in cases where a brake with a manual release lever is used in the direction of the non-drive end (NDE), a check must be made to ensure that the motor plug does not collide with the manual release lever in the direction of the drive end (DE).

The main advantages of a motor plug over a terminal box with terminals are as follows:

- Peripheral equipment can be quickly installed
- Reduction of installation and repair times for end users
- No wiring errors as a result of the plug system
- Replacement of a geared motor without having to make any intervention in the electronics

The winding connections and, optionally, the power supply for the brake and the signal cables for the temperature sensors are connected in the plug housing.

HAN 10E motor plug

The motor plug is compatible with the products from the ECOFAST field device system. It is available for motor frame sizes 63 to 132 and can be used for line voltages at the motor plug ≤ 500 V and rated currents ≤ 16 A.

The motor plug can be used in the standard temperature range from -20 up to +40 °C. A special design is required for higher temperatures.

The motor connection (star or delta connection) is selected by the customer in the form of the counterplug used.

Technical specifications

Number of contacts	10 + ⏚
Max. voltage	500 V
Max. current load per PIN	16 A
Specifications	CE, cUL-Rus
Degree of protection	IP65

Order code:

HAN 10E motor plug (2 brackets) [1]	**N00**
HAN 10E motor plug (2 brackets) EMC [1]	**N01**
HAN 10E motor plug (1 bracket) [1]	**N04**
HAN 10E motor plug (1 bracket) EMC [1]	**N06**
HAN 10E counterplug [1]	**N18**

[1] Not possible for worm geared motors S

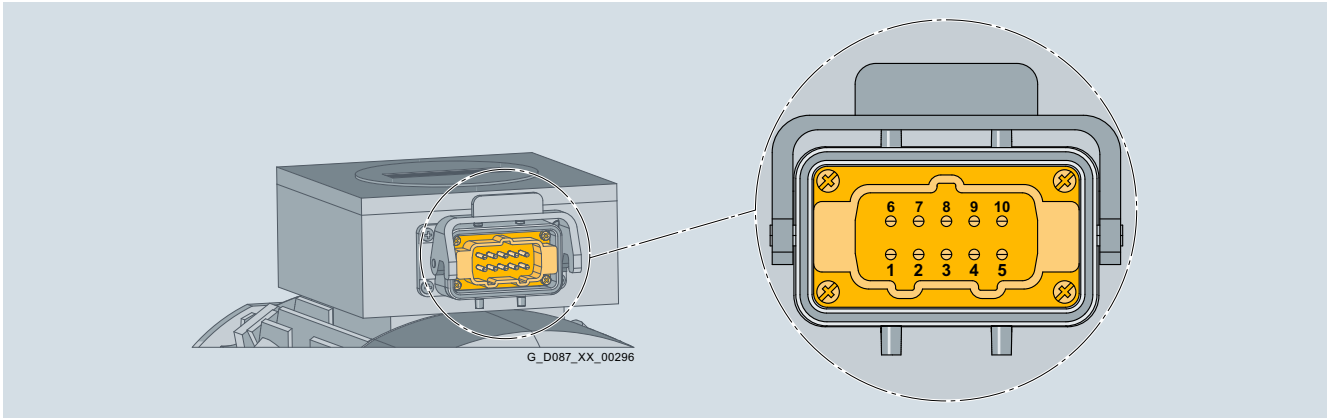

Fig. 11/16 HAN 10 E motor plug with pin assignments

Connection assignment

PIN	1	2	3	4	5	6	7	8	9	10	PE
Connection	U1	V1	W1	Brake	Brake	W2	U2	V2	Temperature-dependent winding protection		Protective conductor

© Siemens AG 2017

HAN 10E motor plug (continued)

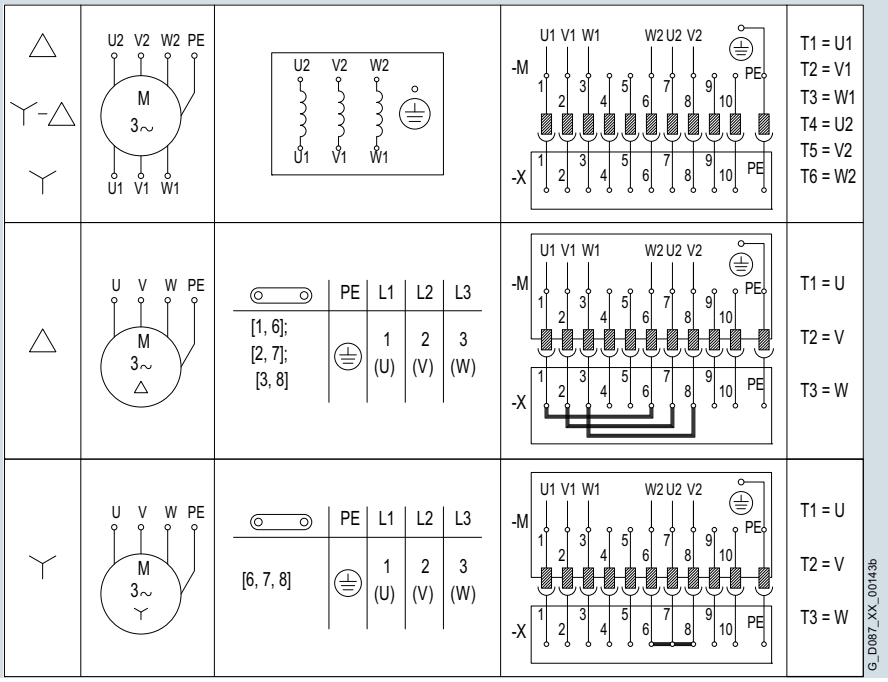

Fig. 11/17 Connection circuit diagram for motor winding

HAN K4/4 motor plug

The motor plug is available for motor frame sizes 132 up to 200, and can be used for line voltages ≤ 690 V at the power connection and ≤ 250 V at the control connection – as well as rated currents ≤ 63 A at the power connection and ≤ 16 A at the control connection. The jumpers are connected to the terminal board at the factory depending on the selected circuit or voltage.

Technical specifications

Number of contacts	4 + 4 + ⏚
Max. voltage power range	690 V (pollution degree 3)
Max. current load power range per PIN	63 A
Max. voltage control range	250 V (pollution degree 3)
Max. current load control range per PIN	16 A
Specifications	CE, cUL-Rus
Degree of protection (interlocked)	IP65

Order code:

HAN K4/4 motor plug (1 bracket) [1)]	**N08**
HAN K4/4 motor plug (1 bracket) EMC [1)]	**N09**
HAN K4/4 motor plug (2 brackets) [1)]	**N10**
HAN K4/4 motor plug (2 brackets) EMC [1)]	**N11**
HAN K4/4 counterplug [1)]	**N19**

[1)] Not possible for worm geared motors S

© Siemens AG 2017

HAN K4/4 motor plug (continued)

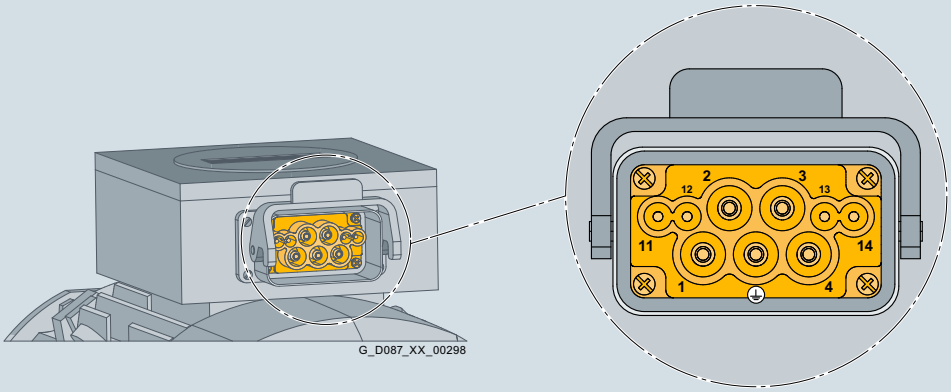

Fig. 11/18 HAN K4/4 motor plug with pin assignments

Connection assignment

PIN	1	2	3	4	11	12	13	14	PE
Connection	U	V	W	-	Brake	Brake	Temperature-dependent winding protection		Protective conductor

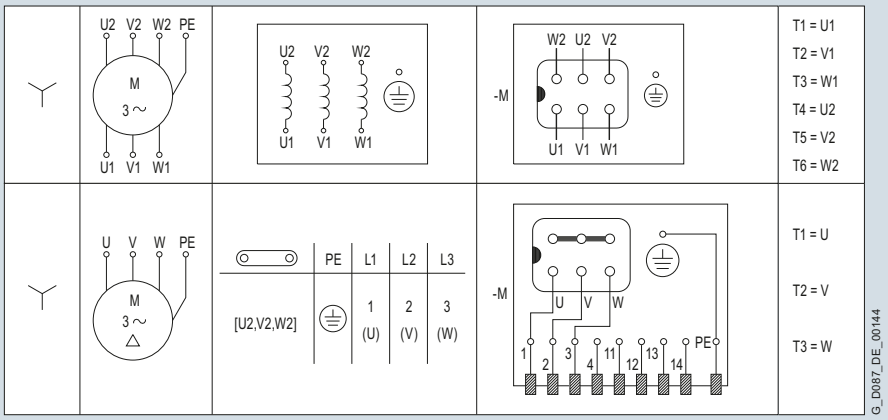

Fig. 11/19 Connection circuit diagram for motor winding Y connection

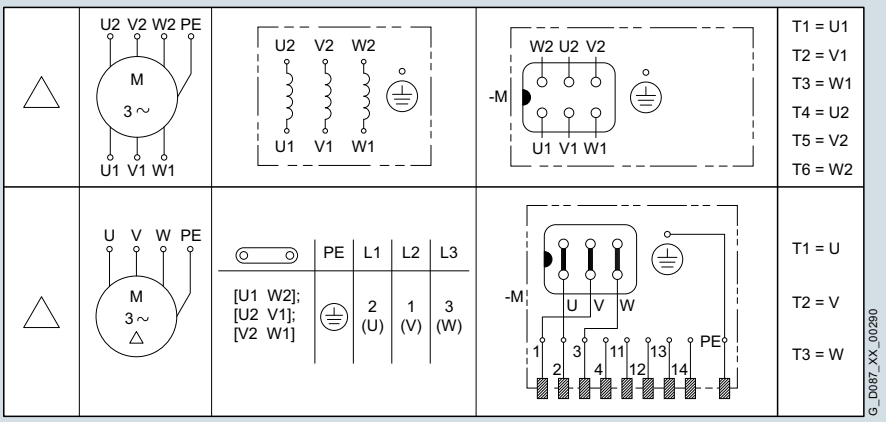

Fig. 11/20 Connection circuit diagram for motor winding Δ connection

© Siemens AG 2017

HAN Q8 motor plug

The motor plug is available for motor frame sizes 63 to 132 and can be used for line voltages ≤ 500 V as well as rated currents ≤ 16 A. The jumpers are connected to the terminal board at the factory depending on the selected circuit or voltage.

Order code:

HAN Q8 motor plug (1 bracket) EMC [1]	**N12**

[1] Not possible for worm geared motors S

Technical specifications

Number of contacts	8 + ⏚
Max. voltage	500 V (pollution degree 3)
Max. current load per PIN	16 A
Specifications	CE, cUL-Rus
Degree of protection (interlocked)	IP65

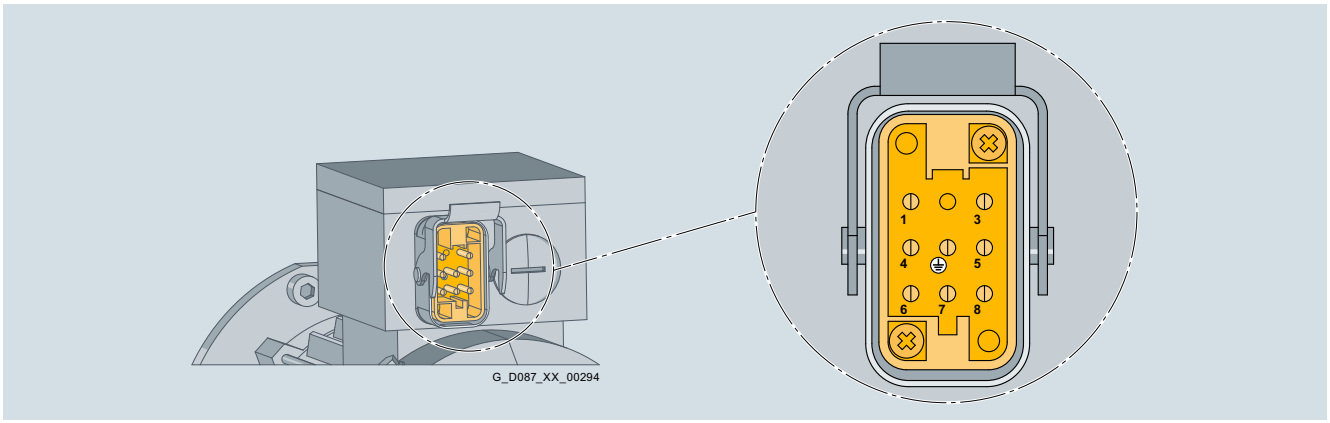

Fig. 11/21 HAN Q8 motor plug with pin assignments for motor frame sizes 63 and 71

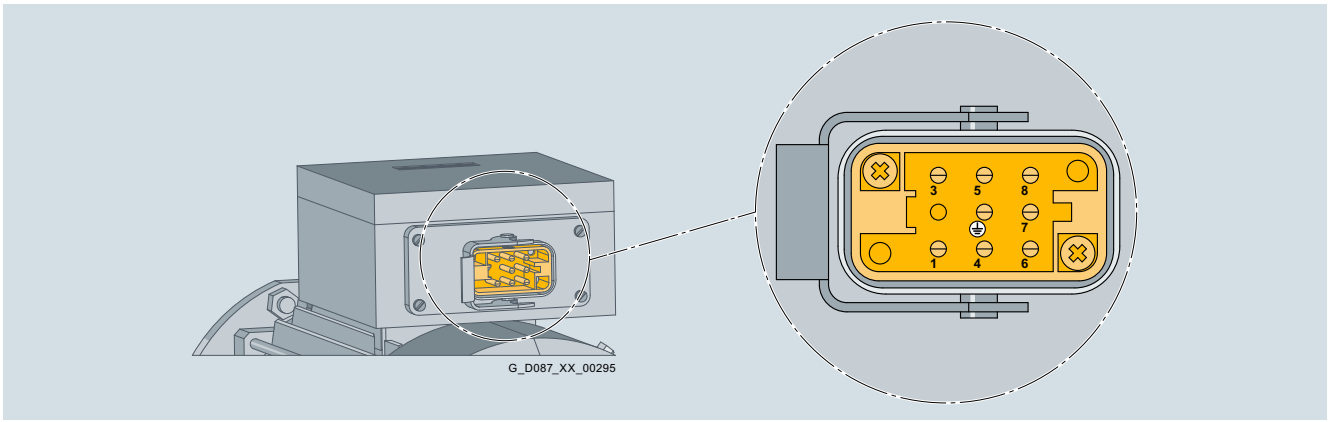

Fig. 11/22 HAN Q8 motor plug with pin assignments for motor frame sizes 80 to 132

Connection assignment

PIN	1	2	3	4	5	6	7	8	PE
Connection	U	-	W	Brake	Temperature-dependent motor protection	Brake	V	Temperature-dependent motor protection	Protective conductor

© Siemens AG 2017

HAN Q8 motor plug (continued)

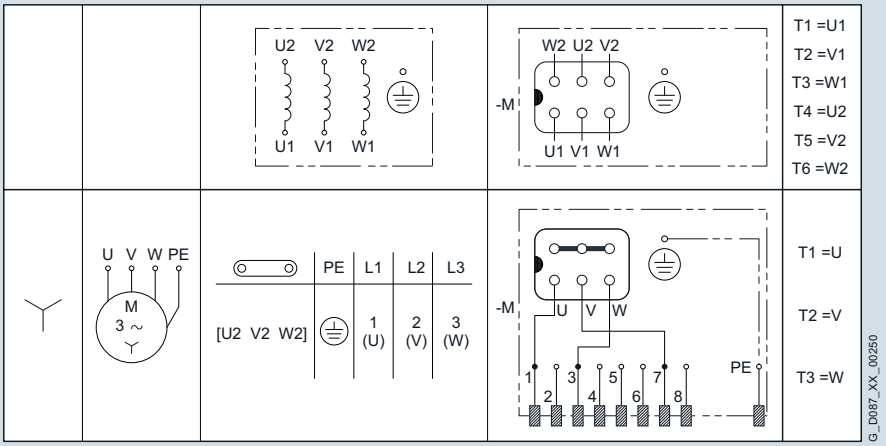

Fig. 11/23 Connection circuit diagram for motor winding Y connection

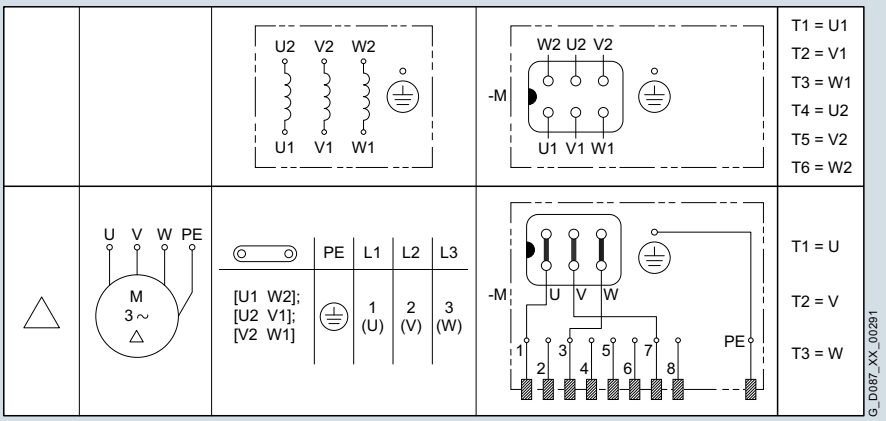

Fig. 11/24 Connection circuit diagram for motor winding Δ connection

11

© Siemens AG 2017

HAN Q8 motor plug with cable

The motor plug with cable is available for motor frame sizes 63 to 100 and can be used for line voltages ≤ 500 V as well as rated currents ≤ 16 A.

One of the intended uses of the motor plug with cable is to provide an optimum connection to SINAMICS G120D.

The jumpers are connected to the terminal board at the factory depending on the selected circuit or voltage.

Technical specifications

Motor plug	
Number of contacts	8 + ⏚
Max. voltage	500 V / UL 600 V + 10 % (pollution degree 3)
Max. current load per PIN	16 A
Specifications	CE, cUL-Rus
Degree of protection (interlocked)	IP65
Cable suitable for cable carriers	
Approvals	
• VDE	yes
• cULus or UL/CSA	yes
• UL-CSA File No.	E172204/LL104758
Rated voltage	
• Power cores U_0/U	600 / 1 000 V
• Signal cores U_0/U	300 V
Operating temperature on the surface	
• Permanently installed	-50 °C ... +90 °C
• Moving	-30 °C ... +80 °C
Smallest bending radius	
• Permanently installed	5 x outer diameter
• Moving	12 x outer diameter
Bending operations	Typically 2 x 10^6 cycles
Oil resistance	DIN VDE 0282 Part 10 + HD22.10
Outer jacket	Polyurethane (PUR)
Design	4x1.5 mm^2+2x(2x0.75 mm^2) (shielded)
Outer diameter	11.7 ... 12.7 mm

Note:

With the HAN Q8 motor plug version with 0.5 m cable (**K50**), the plug insert in the plug is rotated by 180°, see Fig. 11/26.

Order code:

HAN Q8 motor plug with 0.5 m cable (plug insert rotated by 180°)	**K50**
HAN Q8 motor plug with 1 m cable	**K51**
HAN Q8 motor plug with 2 m cable	**K52**
HAN Q8 motor plug with 3 m cable	**K53**
HAN Q8 motor plug with 4 m cable	**K54**
HAN Q8 motor plug with 5 m cable	**K55**

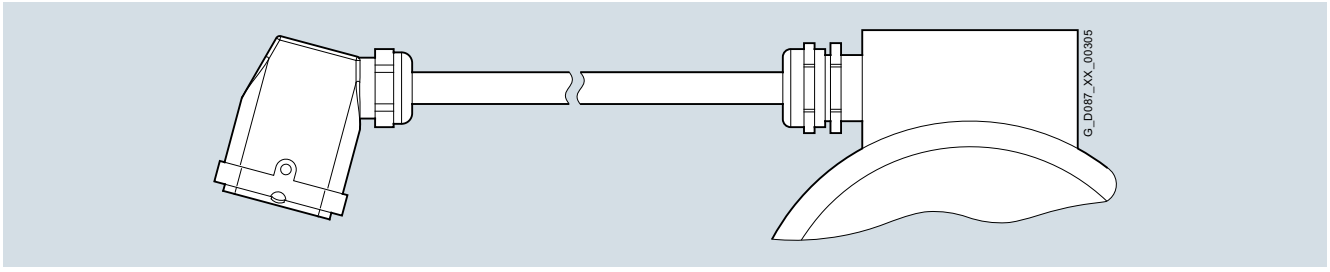

Fig. 11/25 HAN Q8 motor plug with cable

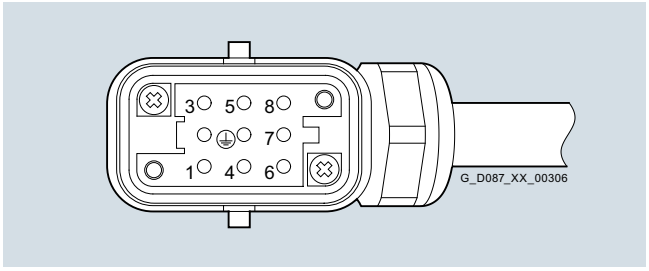

Fig. 11/26 Pin assignments for motor plug with 0.5 m cable, plug insert rotated by 180°

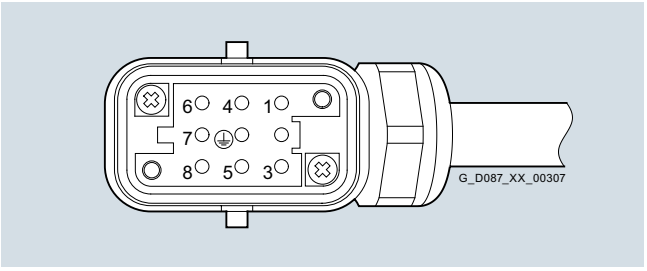

Fig. 11/27 Pin assignments for motor plug with 1 m to 5 m cable, plug insert rotated by 0°

© Siemens AG 2017

HAN Q8 motor plug with cable (continued)

Connection assignment

PIN	1	2	3	4	5	6	7	8	PE
Connection	U	-	W	Brake	Temperature-dependent motor protection	Brake	V	Temperature-dependent motor protection	Protective conductor

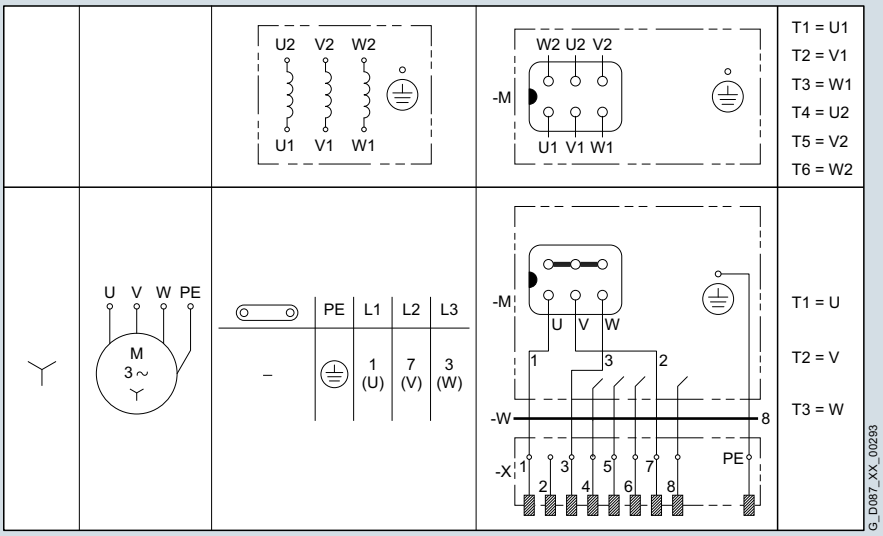

Fig. 11/28 Connection circuit diagram for motor winding Y connection

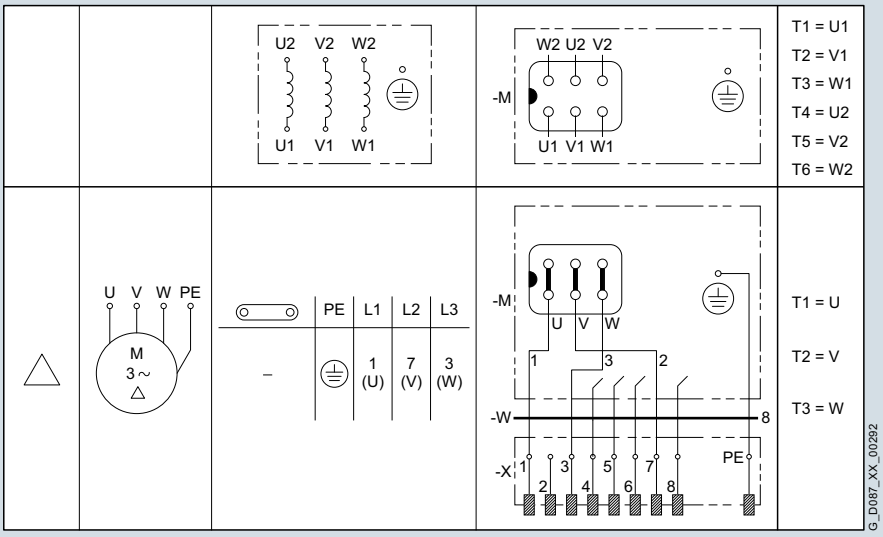

Fig. 11/29 Connection circuit diagram for motor winding Δ connection

© Siemens AG 2017

HAN Q12 motor plug

The motor plug is available for motor frame sizes 63 to 90 and can be used for line voltages ≤ 400 V as well as rated currents ≤ 10 A. The motor connection (star or delta connection) is selected by the customer.

Technical specifications

Number of contacts	12 + ⏚
Max. voltage	400 V (pollution degree 3)
Max. current load per PIN	10 A
Specifications	CE
Degree of protection (interlocked)	IP65

Order code:

HAN Q12 motor plug (1 bracket) EMC [1]	**N13**

[1] Not possible for worm geared motors S

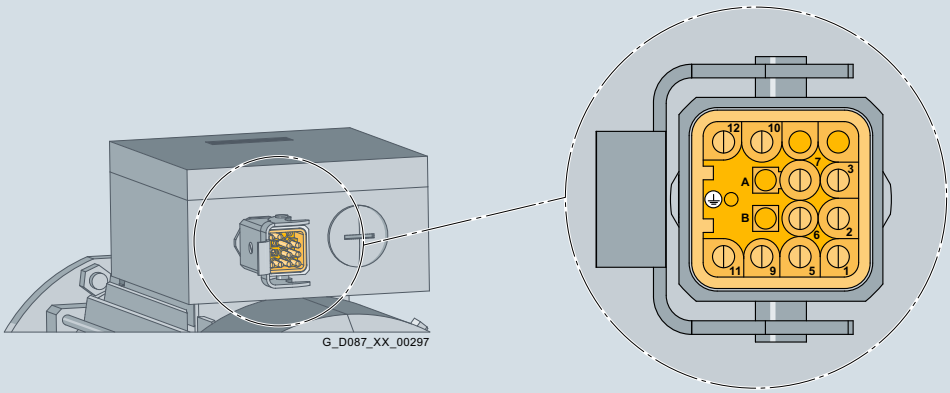

Fig. 11/30 HAN Q12 motor plug with pin assignments

Connection assignment

PIN	1	2	3	4	5	6	7	8	9	10	11	12	PE
Connection	U1	V1	W1	-	W2	U2	V2	-	Brake	Temperature-dependent winding protection	Brake	Temperature-dependent winding protection	Protective conductor

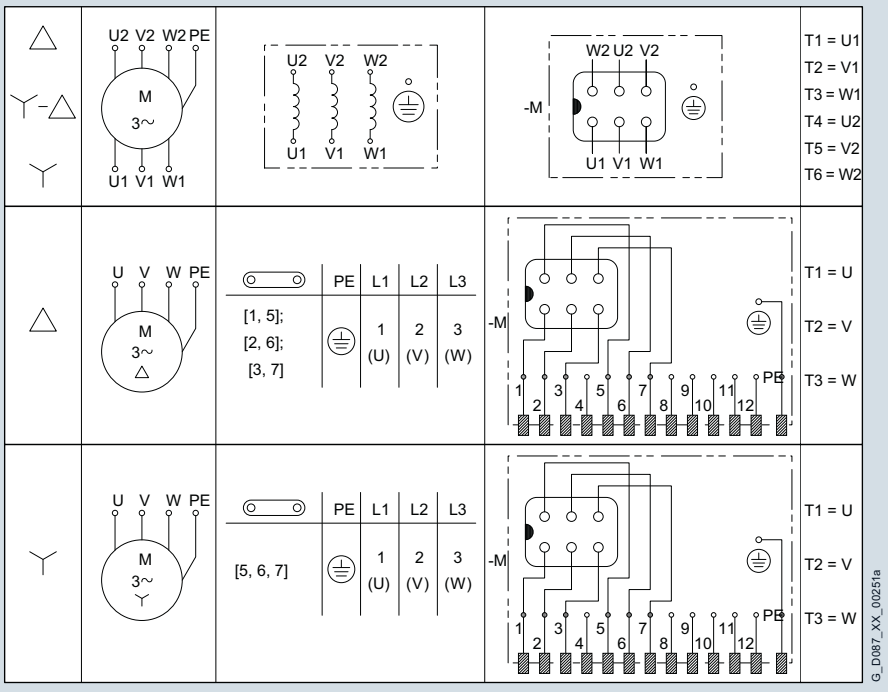

Fig. 11/31 Connection circuit diagram for motor winding

© Siemens AG 2017

Overview

SIMOGEAR geared motors can be supplied with spring-operated disk brakes in order to reduce the motor run-on time or to hold loads, for example.

Our MODULOG modular system allows several brake sizes to be used with one motor frame size. This chapter specifies the assignment to the motor frame sizes and possible brake options.

Design and principle of operation

Single-disk, spring-operated brakes have two friction surfaces. When the brake is in a zero current state, a braking torque is generated using several springs.

The brake is released electromagnetically. When the motor brakes, the rotor which can be axially shifted on the hub or the shaft is pressed via the armature disk against the friction surface by means of the springs. In the braked state, there is a gap between the armature disk and the solenoid component.

To release the brake, the solenoid is energized with DC voltage. The resulting magnetic force attracts the armature disk onto the solenoid component against the spring force.

The spring force is then no longer applied to the rotor, which can now rotate freely.

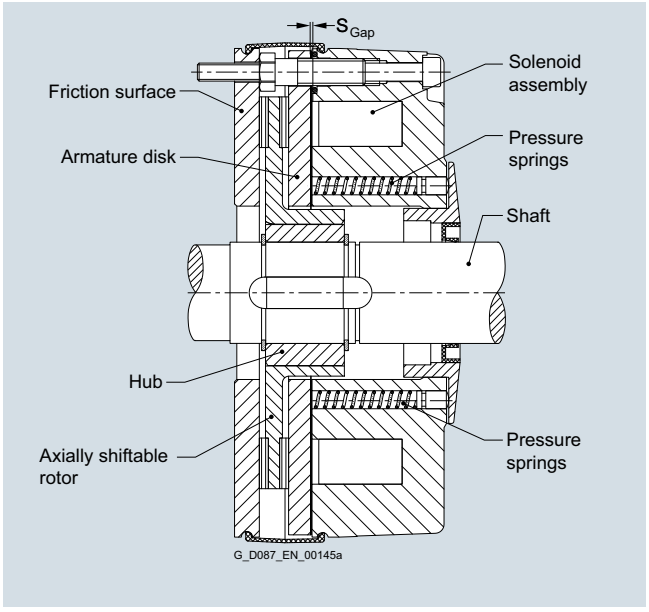

Fig. 11/32 Brake L

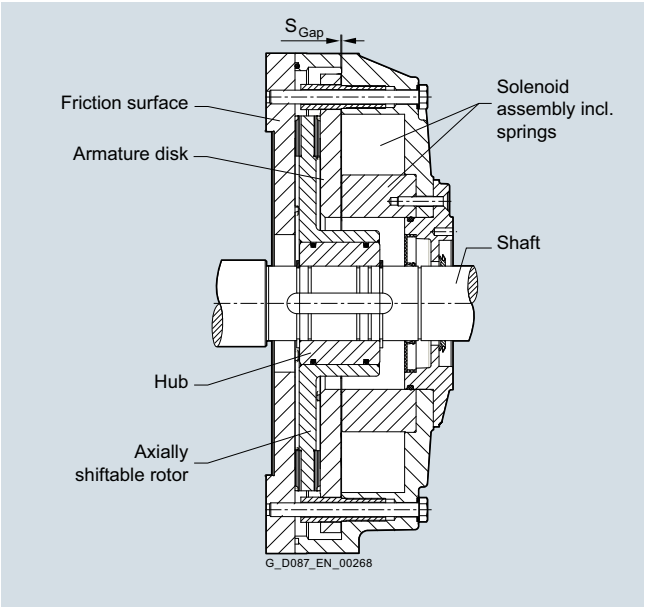

Fig. 11/33 Brake FDX

© Siemens AG 2017

Selecting the brake

Our MODULOG modular system allows several brake sizes to be used with one motor frame size.

Brake assignment

Brake type	Braking torque	Motor frame size												Order code
	Nm	63	71	80	90	100	112	132	160	180	200	225	250	
L4/1.4	1.4	❍	❍	❍										**B01**
L4/2	2	❍	❍	❍										**B02**
L4/3	3	❍	❍	❍										**B03**
L4	4	❑	❑	❍										**B00**
L4/5	5	❍	❍	❍										**B57**
L8/3	3		❍ [1]	❍	❍									**B05**
L8/4	4		❍ [1]	❍	❍									**B06**
L8/5	5		❍ [1]	❍	❍									**B07**
L8/6.3	6.3		❍ [1]	❍	❍									**B08**
L8	8		❍ [1]	❑	❍									**B04**
L8/10	10		❍ [1]	❍	❍									**B09**
L16/8	8			❍	❍	❍								**B14**
L16/10	10			❍	❍	❍								**B11**
L16/13	13			❍	❍	❍								**B12**
L16	16			●	❑	❍								**B10**
L16/20	20				❍	❍								**B13**
L32/14	14				❍	❍	❍							**B66**
L32/18	18				❍	❍	❍							**B16**
L32/23	23				❍	❍	❍							**B17**
L32	32				❍	❑	❑							**B15**
L32/40	40					❍	❍							**B18**
L60/25	25					❍	❍							**B67**
L60/38	38					❍	❍							**B20**
L60/50	50					❍	❍							**B21**
L60	60						❍							**B19**
L80/25	25							❍						**B24**
L80/35	35							❍						**B25**
L80/50	50							❍						**B26**
L80/63	63							❍						**B27**
L80	80							❑						**B22**
L80/100	100							❍						**B23**
L150/60	60							❍	❍					**B31**
L150/80	80							❍	❍					**B32**
L150/100	100							❍	❍					**B29**
L150/125	125							❍	❍					**B30**
L150	150							❍	❑					**B28**
L260/100	100								❍	❍	❍			**B34**
L260/145	145								❍	❍	❍			**B35**
L260/180	180								❍	❍	❍			**B36**
L260/200	200								❍	❍	❍			**B37**
L260/240	240								❍	❍	❍			**B38**
L260	260								❍	❑	❑			**B33**
L260/315	315									❍	❍			**B58**
L400/265	265										❍	❍		**B40**
L400/300	300										❍	❍		**B41**
L400/360	360										❍	❍		**B42**
L400	400										❍	❍		**B39**
L400/600	600										●	●		**B59**
FDX30/265	265											❍	❍	**B50**
FDX30/300	300											❍	❍	**B51**
FDX30/360	360											❍	❍	**B52**
FDX30/400	400											❑	❍	**B53**
FDX30/500	500											❍	❍	**B54**
FDX30/650	650											❍	❍	**B55**
FDX30/750	750												❍	**B56**
FDX30/850	850												❍	**B64**
FDX40/650	650												❍	**B60**
FDX40/750	750												❍	**B61**
FDX40/850	850												❑	**B62**
FDX40/1000	1 000												❍	**B63**

❑ Standard assignment
❍ Working brake and holding brake
● Can only be used as holding brake

[1] Not possible for worm geared motors S

© Siemens AG 2017

Connecting the brake

Labeled terminals are provided in the main terminal box of the motor to connect the brake.

Connection circuit diagram with AC or DC control

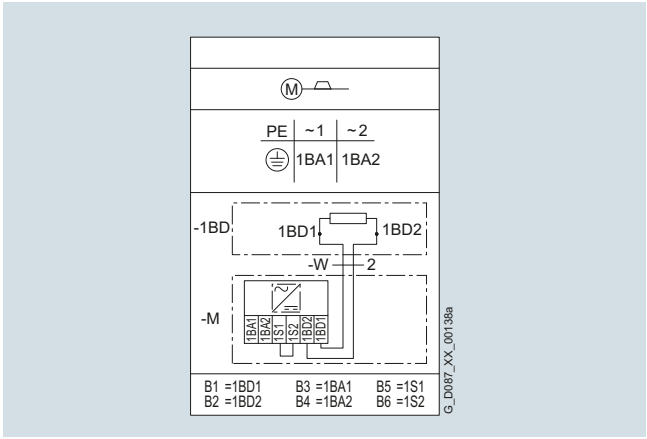

Fig. 11/34 Connection circuit diagram with AC control voltage

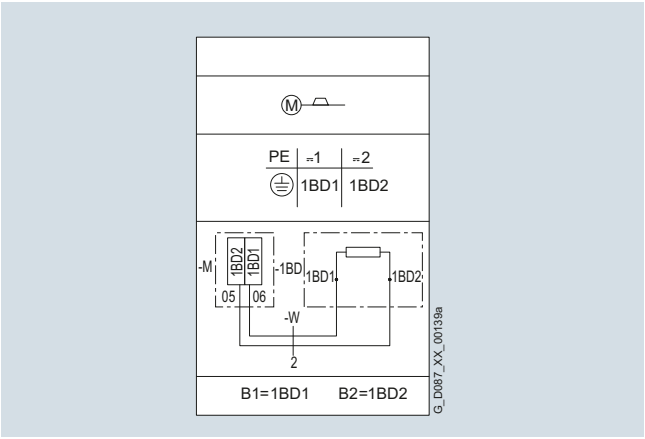

Fig. 11/35 Connection circuit diagram with DC control voltage

Function diagram of a brake switched on the AC or DC and AC sides

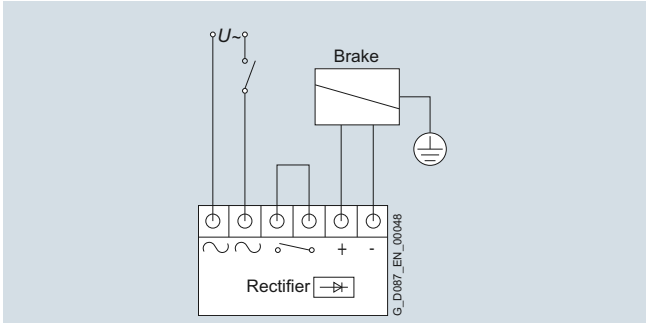

Fig. 11/36 Function diagram of a brake switched on the AC side

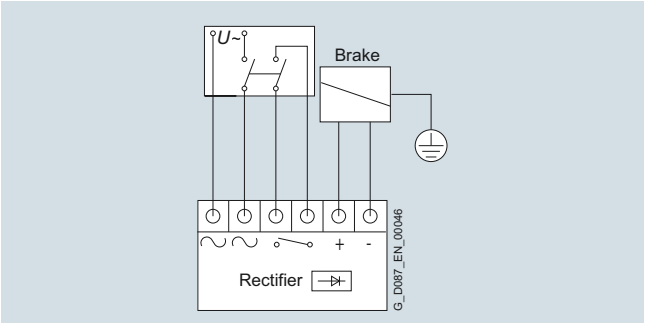

Fig. 11/37 Function diagram of a brake switched on the DC and AC sides

Supply voltages

The following supply voltages are available for brakes.

Supply voltage	Possible specifications					Motor frame sizes	Brake type		Rectifier		Coil voltage		Order code
	CE	UL-R/CSA	China	EAC	Export[1]		L4 ... L400	FDX30/ FDX40	Brake L	Brake FDX	Brake L	Brake FDX	
DC voltages													
24 V DC ± 10 %	✓	✓	✓	✓	✓	63 ... 200	✓	-	-	-	-	-	**C66**
103 V DC ± 10 %	✓	✓	✓	✓	✓	63 ... 200	✓	-	-	-	-	-	**C52**
180 V DC ± 10 %	✓	✓	✓	✓	✓	63 ... 200	✓	-	-	-	-	-	**C53**
205 V DC ± 10 %	✓	✓	✓	✓	✓	63 ... 200	✓	-	-	-	-	-	**C64**
AC voltages													
200 V AC ± 10 %	✓	✓	✓	✓	✓	63 ... 250	✓	✓	Rectifier bridge	Rectifier PMG	180 V DC	103 V DC	**C45**
230 V AC ± 10 %	✓	✓	✓	✓	✓	63 ... 250	✓	✓	Half-wave rectifier		103 V DC	103 V DC	**C46**
380 V AC ± 10 %	✓	✓	✓	✓	✓	63 ... 250	✓	✓			180 V DC	180 V DC	**C48**
400 V AC ± 10 %	✓	✓	✓	✓	✓	63 ... 250	✓	✓			180 V DC	180 V DC	**C47**
415 V AC ± 10 %	✓	✓	✓	✓	✓	63 ... 250	✓	✓			180 V DC	180 V DC	**C50**
460 V AC ± 10 %	✓	✓	✓	✓	✓	63 ... 250	✓	✓			205 V DC	205 V DC	**C63**
AC voltages with function rectifier with disconnection on the DC side using current or voltage sensing [1]													
230 V AC ± 10 %	✓		✓	✓	✓	63 ... 200	✓	-	Function rectifier	-	103 V DC	-	**C72**
400 V AC ± 10 %	✓		✓	✓	✓	63 ... 200	✓	-		-	205 V DC	-	**C47**
460 V AC ± 10 %	✓		✓	✓	✓	63 ... 200	✓	-		-	215 V DC	-	**C74**

[1] Not possible for worm geared motors S

© Siemens AG 2017

Brake control

The brakes are released by DC voltage. The brake is controlled by the DC supply voltage in systems without a rectifier, or by the AC supply voltage in systems with a rectifier. Half-wave rectifiers or rectifier bridges are used as rectifiers.

The rectifiers are listed in the following table.

Supply voltage	DC voltages	AC voltages	Switching frequency
Brake L	Without	Rectifier	No restriction
		Function rectifier	See Section "Function rectifier" page 11/28
Brake FDX	-	Rectifier PMG	See table "Switching frequency of PMG rectifiers"

Switching frequency of PMG rectifiers

Duty cycle/switching frequency for the 205 V DC brake solenoid

Supply voltage	Switching frequency s/h^{-1}														
V_{AC}	1	10	20	30	40	50	60	70	80	90	100	110	120	130	140
410 ... 480 V AC															
410	100.00	100.00	100.00	100.00	100.00	100.00	100.00	100.00	100.00	100.00	100.00	100.00	100.00	100.00	100.00
420	100.00	100.00	100.00	100.00	100.00	100.00	100.00	100.00	100.00	100.00	100.00	100.00	100.00	100.00	100.00
440	100.00	100.00	100.00	100.00	100.00	100.00	100.00	100.00	100.00	99.40	98.53	97.66	96.80	95.93	95.06
460	98.08	97.21	96.34	95.48	94.61	93.74	92.88	92.01	91.14	90.28	89.41	88.54	87.68	86.81	85.94
480	90.07	89.21	88.34	87.47	86.61	85.74	84.87	84.01	83.14	82.27	81.41	80.54	79.67	78.81	77.94

Duty cycle/switching frequency for the 180 V DC brake solenoid

Supply voltage	Switching frequency s/h^{-1}														
V_{AC}	1	10	20	30	40	50	60	70	80	90	100	110	120	130	140
380 ... 440 AC															
380	100.00	100.00	100.00	100.00	100.00	100.00	100.00	100.00	100.00	100.00	100.00	100.00	100.00	99.54	98.67
400	100.00	99.13	98.27	97.40	96.53	95.67	94.80	93.93	93.07	92.20	91.33	90.47	89.60	88.73	87.87
410	95.18	94.31	93.45	92.58	91.71	90.85	89.98	89.11	88.25	87.38	86.51	85.65	84.78	83.91	83.05
420	90.70	89.84	88.97	88.10	87.24	86.37	85.50	84.64	83.77	82.90	82.04	81.17	80.30	79.44	78.57
440	82.64	81.78	80.91	80.04	79.18	78.31	77.44	76.58	75.71	74.84	73.98	73.11	72.24	71.38	70.51

Duty cycle/switching frequency for the 103 V DC brake solenoid

Supply voltage	Switching frequency s/h^{-1}														
V_{AC}	1	10	20	30	40	50	60	70	80	90	100	110	120	130	140
190 ... 240 V AC															
190	100.00	100.00	100.00	100.00	100.00	100.00	100.00	100.00	100.00	100.00	100.00	100.00	100.00	100.00	100.00
200	100.00	100.00	100.00	100.00	100.00	100.00	100.00	100.00	100.00	100.00	100.00	100.00	100.00	100.00	100.00
210	100.00	100.00	100.00	100.00	100.00	100.00	100.00	100.00	100.00	100.00	100.00	100.00	100.00	100.00	100.00
220	100.00	100.00	100.00	100.00	100.00	100.00	100.00	100.00	100.00	100.00	99.58	98.71	97.84	96.98	96.11
230	99.04	98.17	97.30	96.44	95.57	94.70	93.84	92.97	92.10	91.24	90.37	89.50	88.64	87.77	86.90
240	90.96	90.09	89.22	88.36	87.49	86.62	85.76	84.89	84.02	83.16	82.29	81.42	80.56	79.69	78.82

© Siemens AG 2017

Function rectifier

The following table provides an overview of brake control with function rectifiers.

Function rectifier		**High-speed rectifier + disconnection on the DC side using**	
Technical specifications	Unit	**Current sensing** [4]	**Voltage sensing** [4]
Supply voltage	V_{AC} ± 10 %	220 … 460	220 … 500
Supply frequency	Hz	40 … 60	40 … 60
Max. output current up to an ambient temperature of +40 °C[1]	A_{DC}	1.2	1.2
Output voltage	V_{DC}	0.445 x supply voltage (0.89 - max. 8 %) x supply voltage	0.445 x supply voltage (0.89 - max. 8 %) x supply voltage
Permissible continuous current of the current sensor	A_{DC}	0.27 … 34	-
Max. switching frequency[2]	rpm	76[2)3)]	76[2)3)]
Supported motors		Max. motor current 34 A	No restrictions
Supported brakes		L4 … L400	L4 … L400
Suitable for		Braking operation for fast brake release + application	Braking operation for fast brake release + application
Inverter operation		Not suitable	Separate power supply required
Line operation		Direct-on-line starting	Direct-on-line Y/Δ starting
Motor starters		Not suitable	No restrictions
Operation with driving loads and/or high moment of inertia		No restrictions	Separate power supply required
Suppressor circuit		Spark suppressor	Spark suppressor
Order code		**C59** [5]	**C60**

1) At higher ambient temperatures the output current decreases.
2) The specified maximum switching frequencies are upper limit values. They are essentially dependent on the braking power and the permissible operating energy of the brakes.
3) The maximum switching frequency is obtained from the overexcitation and recovery times as well as switching-off in holding operation.
4) Not possible for worm geared motors S
5) The function rectifier **C59** is connected to the terminal board at the factory depending on the selected circuit or voltage.

Duty cycle, function rectifier

The high-speed rectifier releases the brake with overexcitation and thus reduces the maximum duty cycle (on-load factor) of the brake.

Depending on the supply voltage and the switching frequency, the maximum duty cycle of the brake solenoid can be taken from the following diagrams and tables.

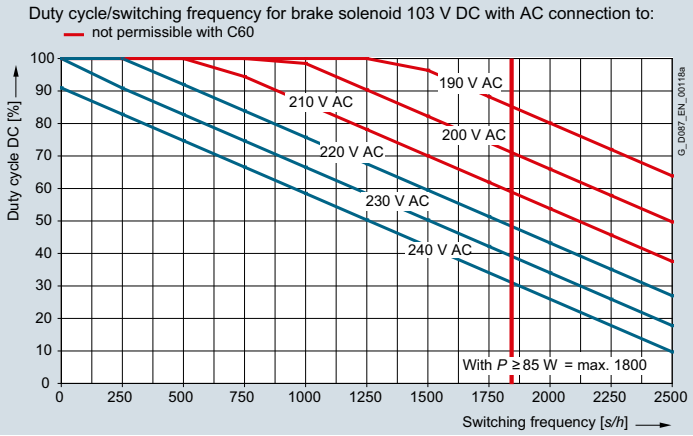

Fig. 11/38 Duty cycle/switching frequency for the 103 V DC brake solenoid

Supply voltage	**Switching frequency** s/h^{-1}								Up to brake size L80		
V_{AC}	1	250	500	750	1 000	1 250	1 500	1 750	2 000	2 250	2 500
220 … 240 V AC for separate power supply											
220	100	100	91	83	75	67	59	51	43	35	26
230	100	90	82	74	66	58	50	42	34	25	17
240	100	82	74	66	58	50	42	34	25	17	9

© Siemens AG 2017

Function rectifier (continued)

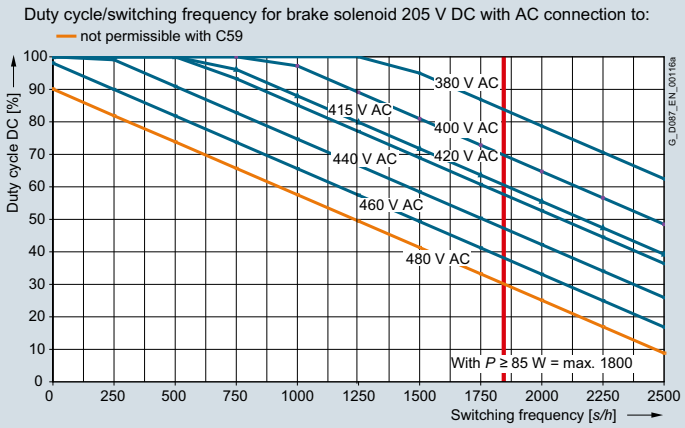

Fig. 11/39 Duty cycle/switching frequency for the 205 V DC brake solenoid

Supply voltage	Switching frequency s/h^{-1}								Up to brake size L80		
V_{AC}	1	250	500	750	1 000	1 250	1 500	1 750	2 000	2 250	2 500
400 V AC for connection at the motor terminal board											
380	100	100	100	100	100	100	94	86	78	70	62
400	100	100	100	100	97	89	80	72	64	56	48
420	100	100	100	93	85	77	68	60	52	44	36
380 ... 440 V AC for separate power supply											
380	100	100	100	100	100	100	94	86	78	70	62
400	100	100	100	100	97	89	80	72	64	56	48
440	100	99	90	82	74	66	58	50	42	34	25

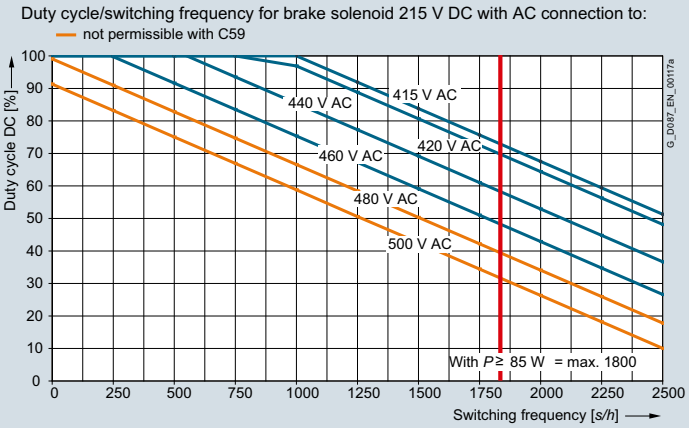

Fig. 11/40 Duty cycle/switching frequency for the 215 V DC brake solenoid

Supply voltage	Switching frequency s/h^{-1}								Up to brake size L80		
V_{AC}	1	250	500	750	1 000	1 250	1 500	1 750	2 000	2 250	2 500
410 ... 480 V AC for separate power supply[1)]											
410	100	100	100	100	100	95	87	78	70	62	54
460	100	99	91	83	75	67	59	51	42	34	26
480	100	90	82	74	66	58	50	42	34	25	17

[1)] The brake power supply voltage can be limited by the rectifier.

© Siemens AG 2017

Brake options

Manual brake release

The brakes L can be supplied with a manual brake release lever. The manual brake release lever can be used to release the brake at zero current. When the brake has been released, the motor shaft can rotate freely in order to bring the output shaft to a certain position or for use as an emergency release in the event of a power failure, for example.

The manual brake release lever can be fixed in the released position using an additional locking mechanism mounted on the brake.

Only the manual brake release lever with locking mechanism can be selected for brakes FDX.

The manual brake release lever can be mounted in various different positions. The position of the manual brake release lever relates to the standard design of the motor. The standard position is "2".

Order code:	
Manual brake release lever	**C02**
Manual brake release lever with locking mechanism [1]	**C03**

[1] Not possible for worm geared motors S

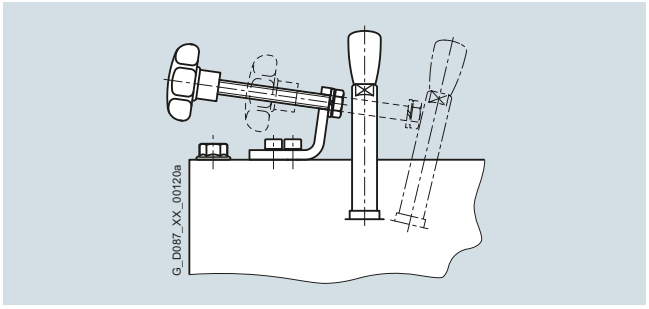

Fig. 11/41 Example of manual brake release lever with locking mechanism for brake L

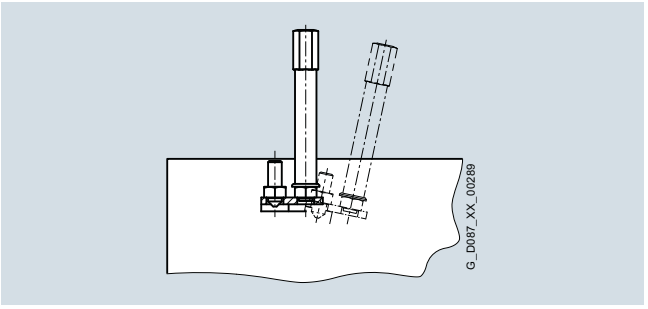

Fig. 11/42 Example of manual brake release lever with locking mechanism for brake FDX

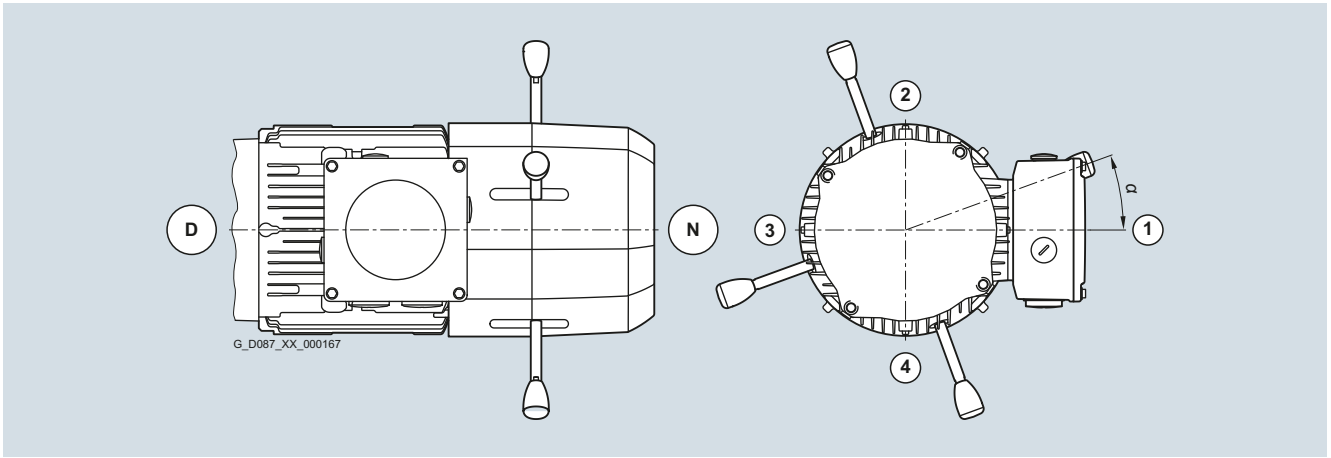

Fig. 11/43 Manual brake release lever position

Manual brake release lever position	Motor frame size														Order code
	63 [1]	71 [1]	63	71	80	90	100	112	132	160	180	200	225	250	
	Angle α														
1	0°	0°	0°	10°	0°	0°	0°	0°	0°	0°	0°	0°	0°	0°	**C26**
2	90°	90°	90°	100°	90°	90°	90°	90°	90°	90°	90°	90°	90°	90°	**C27**
3	180°	180°	180°	190°	180°	180°	180°	180°	180°	180°	180°	180°	180°	180°	**C28**
4	-	-	270°	280°	270°	270°	270°	270°	270°	270°	270°	270°	270°	270°	**C29**

[1] Only for worm geared motors S

© Siemens AG 2017

Brake options (continued)

The dimensions of the manual brake release lever depend on the size.

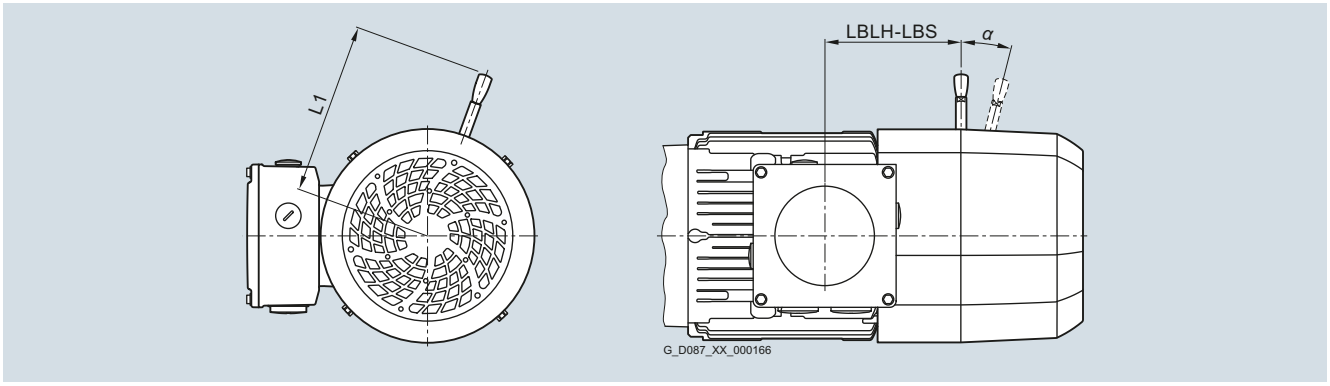

Fig. 11/44 Dimensions, manual brake release lever

Motor frame size	Brake type	Terminal box position	Distance				Angle, manual brake release lever
			Centerline of the motor up to the outermost position of the manual brake release lever		Center of the terminal box up to the center of the manual brake release lever		With the brake released
			Without locking mechanism	With locking mechanism	Standard corrosion protection	Increased corrosion protection	
			mm	mm	mm	mm	Tolerance +3°
			L1	**L1**	**LBLH-LBS**	**LBLH-LBS**	χ
63 [1]	L4	1A, 2A, 3A, 4A	107	-	97.4	97.4	12°
71 [1]	L4	1A, 2A, 3A, 4A	107	-	130.8	130.8	12°
63	L4	1A, 2A, 3A, 4A	107	127	83.3	83.3	12°
71	L4	1A, 2A, 3A, 4A	107	127	71.8	71.8	12°
	L8	1A, 2A, 3A, 4A	116	136	72.3	72.3	10°
80	L4	1A, 2A, 3A, 4A	107	127	97.3	97.3	12°
	L8	1A, 2A, 3A, 4A	116	136	97.8	97.8	10°
	L16	1A, 2A, 3A, 4A	132	151	108.9	108.9	9°
90	L8	1A, 2A, 3A, 4A	116	136	102.8	102.8	10°
	L16	1A, 2A, 3A, 4A	132	151	113.9	113.9	9°
	L32	1A, 2A, 3A, 4A	161	161	115.9	115.9	10°
100	L16	1A, 2A, 3A, 4A	132	151	126.9	126.9	9°
	L32	1A, 2A, 3A, 4A	161	161	128.9	128.9	10°
	L60	1A, 2A, 3A, 4A	195	195	132.5	132.5	9°
112	L32	1A, 2A, 3A, 4A	161	161	128.9	128.9	10°
	L60	1A, 2A, 3A, 4A	195	195	132.5	132.5	9°
132	L80	1A, 2A, 3A, 4A	240	240	158.0	158.0	10°
	L150	1A, 2A, 3A, 4A	279	279	171.1	171.1	9°
132Z	L80	1A, 2A, 3A, 4A	240	240	158.0	158.0	10°
	L150	1A, 2A, 3A, 4A	279	279	171.1	171.1	9°
160	L150	1A, 2A, 3A, 4A	279	279	204.1	204.1	9°
	L260	1A, 2A, 3A, 4A	319	319	210.6	210.6	10°
180	L260	1A, 2A, 3A, 4A	319	319	198.6	209.6	10°
200	L260	1A, 2A, 3A, 4A	319	319	207.6	218.6	10°
	L400	1A, 2A, 3A, 4A	445	445	217.7	230.2	10°
225	L400	1A, 2A, 3A, 4A	445	445	269.2	269.2	10°
	FDX30	1A, 2A, 3A, 4A	330	330	270.0	270.0	12°
250	FDX30	1A, 2A, 3A, 4A	330	330	273.0	273.0	12°
	FDX40	1A, 2A, 3A, 4A	377	377	273.0	273.0	10°

[1] Only for worm geared motors S

© Siemens AG 2017

Brake options (continued)

Monitoring

Brake with microswitch to monitor the release

The air gap s_{gap} of the brake is monitored by a microswitch mounted on the base plate of the solenoid.

The motor does not start up until the brake has been fully released (s_{gap} = 0) and the armature disk is in contact with the solenoid. The microswitch is actuated and controls the motor contactor.

When the brake is switched off, the armature disk reaches the maximum air gap (s_{gapmax}) and the microswitch opens. This means that the motor contactor is not controlled and the motor does not start.

This method is used for machines and units which require a precisely defined starting and braking procedure, as well as for fault monitoring of faulty rectifiers, interrupted connecting cables, faulty solenoids, and excessively large air gaps (brake solenoid cannot fully attract the armature disk).

The microswitch for air gap monitoring is available for brakes in sizes L32 to L400 and FDX30 and FDX40.

Note:

The mechanical components of the microswitch must be protected against icing at low temperatures.

Order code:

Microswitch for monitoring brake release	**C04**

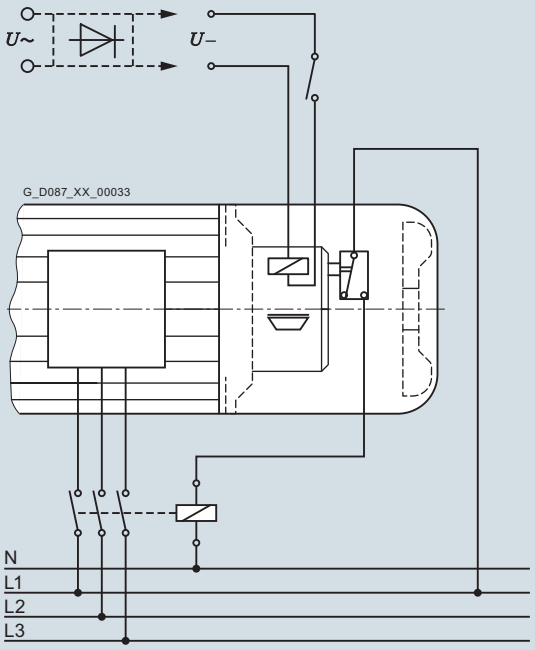

Fig. 11/45 Circuit principle with microswitch

© Siemens AG 2017

Brake options (continued)

Enclosed brake

The brakes L can be supplied as enclosed brakes. This version is standard for brakes FDX.

Enclosed brakes include a dust protection ring around the circumference and an integrated shaft sealing ring at the shaft outlet. This prevents the release and penetration of dust, moisture, and other pollution. Other advantages are reduced noise when applying the brake as well as, in combination with a motor anti-condensation heater, a reduced risk of the rotor freezing on the friction surfaces.

In addition, a condensation drain hole can be incorporated in the dust protection ring for brakes L.

The enclosed brake can also be shipped in combination with a manual brake release lever and a manual brake release lever with locking mechanism.

Order code:	
Enclosed brake	**C01**
Enclosed brake with condensation drain hole	**C11**

Corrosion protection

The brakes L are supplied as standard with corrosion protection. A friction plate or adapter flange is always mounted between the mating friction surface (end shield on the ventilation side) and the rotor. The rotor is made of a rustproof material.

Order code:	
Increased corrosion protection	**C10**

Brake with increased corrosion protection

The adapter flanges and armature disks of the brakes are chromium-plated for increased protection against corrosion. This prevents the friction surfaces from seizing up.

Increased corrosion protection is employed when a motor is used in corrosive environmental conditions (high air humidity, dripping water, crane systems, for example) and/or when longer standstill times are involved.

The brakes FDX are supplied as standard with increased corrosion protection.

Corrosion protection		**Brake type**										
Design	Material	**L4**	**L8**	**L16**	**L32**	**L60**	**L80**	**L150**	**L260**	**L400**	**FDX30**	**FDX40**
Standard corrosion protection												
Friction surface to the motor	Friction plate of stainless steel	✓	✓	✓	✓	✓	✓					
	Adapter flange with thin zinc film							✓	✓	✓		
	End shield								✓[1]	✓		
Armature disk	Gas-nitrided	✓	✓	✓	✓							
	Thin zinc film					✓	✓	✓	✓	✓		
Increased corrosion protection												
Friction surface to the motor	Friction plate of stainless steel	✓	✓	✓	✓	✓	✓					
	Chromium-plated adapter flange							✓	✓	✓	✓	✓
Armature disk	Chromium-plated	✓	✓	✓	✓	✓	✓	✓	✓	✓	✓	✓

[1] For motor frame sizes 180 and 200

Brake cable protection

The brake cable of the geared motors is normally routed through the cable gland of the terminal box.

We are offering an optional version of brake cable routing which ensures enhanced protection for the brake cable. In this version, the brake cable is brought into the motor directly under the fan cover through a hole in the base of the terminal box. This arrangement ensures that most of the cable is covered and protected against mechanical damage.

Order code:	
Brake cable protection	**C80**

© Siemens AG 2017

Brake options (continued)

Reduced-noise rotor-hub connection

The brakes are supplied with a reduced-noise rotor-hub connection. This reduces rattling noise of the rotor, particularly at low speeds and in inverter operation.

Wear-resistant friction lining

The brakes L can also be selected with a wear-resistant friction lining.

Order code:	
Wear-resistant friction lining	**C06**

Brake options for motor frame sizes 63 to 250

Option	Brake type										
	L4	**L8**	**L16**	**L32**	**L60**	**L80**	**L150**	**L260**	**L400**	**FDX30**	**FDX40**
Without rectifier	✓	✓	✓	✓	✓	✓	✓	✓	✓	-	-
Rectifier for disconnection on the DC and AC sides	✓	✓	✓	✓	✓	✓	✓	✓	✓	✓	✓
Function rectifier for quick brake release and application[1)]	✓	✓	✓	✓	✓	✓	✓	✓	✓	-	-
Standard friction lining	✓	✓	✓	✓	✓	✓	✓	✓	✓	❑	❑
Wear-resistant friction lining	✓	✓	✓	✓	✓	✓	✓	✓	✓	-	-
Microswitch for monitoring brake release	-	-	-	✓	✓	✓	✓	✓	✓	✓	✓
Manual brake release	✓	✓	✓	✓	✓	✓	✓	✓	✓	-	-
Manual brake release with locking mechanism	✓	✓	✓	✓	✓	✓	✓	✓	✓	✓	✓
Standard corrosion protection	❑	❑	❑	❑	❑	❑	❑	❑	❑	-	-
Increased corrosion protection	✓	✓	✓	✓	✓	✓	✓	✓	✓	❑	❑
Enclosed brake	✓	✓	✓	✓	✓	✓	✓	✓	✓	❑	❑
Enclosed brake with condensation drain hole	✓	✓	✓	✓	✓	✓	✓	✓	✓	-	-
Brake cable protection	✓	✓	✓	✓	✓	✓	✓	✓	-	-	-

❑ Standard design
1) Not possible for UL-R or CSA versions

Possible modular system in combination with brake for motor frame sizes 63 to 250

Design	Motor plug	Encoder					Ventilation	Backstop	Second shaft extension
		Incremental encoder	Absolute encoder	Resolver	Encoder under cover without canopy	Encoder acces-sories	Self ventilation Forced ventilation		
Brake	✓	✓	✓		✓	✓	✓		✓
Manual brake release	✓	✓	✓	-	✓	✓	✓	-	✓
• Without locking mechanism	✓	✓	✓	-	✓	✓	✓	-	✓
• With locking mechanism	✓	✓	✓	-	✓	✓	✓	-	✓
Microswitch	✓	✓	✓	-	✓	✓	✓	-	✓
• Air flow monitoring[1)]	✓	✓	✓	-	✓	✓	✓	-	✓

1) Can be selected for brake type L32 or higher

© Siemens AG 2017

Technical specifications [1)]

Braking torques as a function of speed and permissible speed limits with operating brake

Brake type	Maximum permissible operating speed		Braking torque measured at rated braking torque at 100 rpm			
	Friction lining					
	Standard	Wear-resistant (**C06**)	1 500 rpm	2 500 rpm	3 000 rpm	At max. speed
	rpm	rpm	%	%	%	%
L4	4 000	3 600	87	82	80	77
L8	4 000	3 600	85	79	78	75
L16	3 600	3 600	83	77	76	74
L32	3 600	3 600	81	76	74	72
L60	3 600	3 000	80	75	73	71
L80	3 600	3 000	79	73	72	69
L150	3 600	1 800	77	71	70	67
L260	3 600	1 800	75	69	68	66
L400	3 000	1 800	73	67	66	65
FDX30	3 000	-	73	67	66	66
FDX40	3 000	-	70	64	63	63

Braking torques as a function of speed and permissible speed limits with holding brake and emergency stop function

Brake type	Max. permissible no-load speed with emergency stop function		Braking torque measured at rated braking torque at 100 rpm			
	Friction lining					
	Standard	Wear-resistant (**C06**)	1 500 rpm	2 500 rpm	3 000 rpm	At max. speed
	rpm		%	%	%	%
L4	6 000	6 000	87	82	80	73
L8	5 000	4 500	85	79	78	72
L16	4 000	3 600	83	77	76	73
L32	3 600	3 600	81	76	74	72
L60	3 600	3 000	80	75	73	71
L80	3 600	3 000	79	73	72	69
L150	3 600	1 800	77	71	70	67
L260	3 600	1 800	75	69	68	66
L400	3 000	1 800	73	67	66	65
FDX30	6 000	-	73	67	66	59
FDX40	6 000	-	70	64	63	56

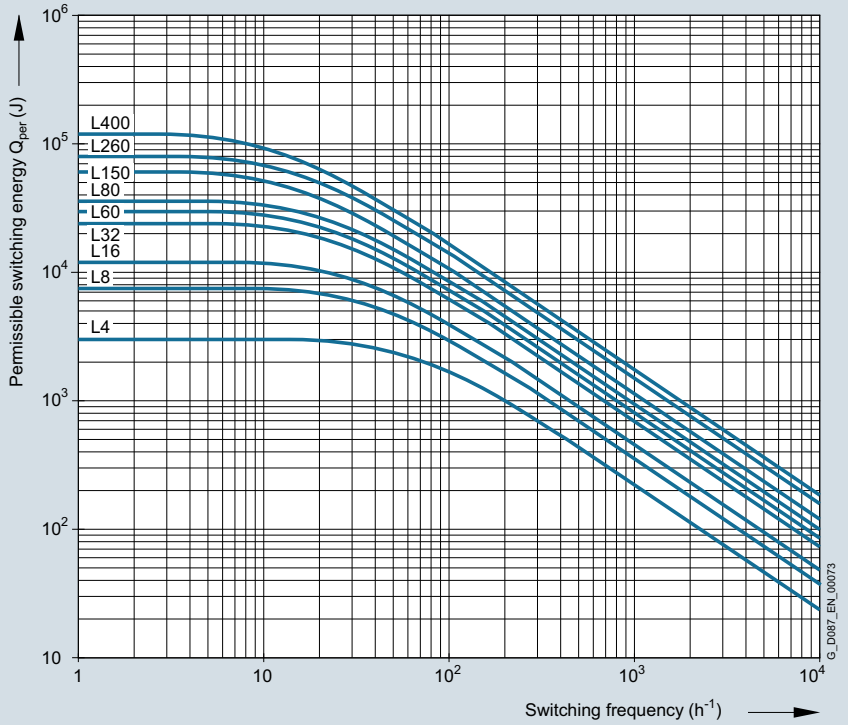

Fig. 11/46 Permissible operating energy

[1)] Values refer to brake in its delivery state

© Siemens AG 2017

Technical specifications (continued) [1)]

Disconnection times, application times and moments of inertia for brakes L

Brake type	Rated braking torque	Disconnection time		Application time	Response time	Rise time	Application time	Response time	Rise time	Weight	Moment of inertia	
	T_{br}	t_2		$t_1 = t_{11} + t_{12}$	t_{11}	t_{12}	$t_1 = t_{11} + t_{12}$	t_{11}	t_{12}		J_B	
	at 100 rpm	Standard excitation	Over-excitation	AC and DC switched or DC switched			AC switched					for wear-resistant lining
	Nm	ms	ms	ms	ms	ms	ms	ms	ms	kg	10^{-4} kgm^2	
L4/1.4	1.4	20	13	31	13.0	18.0	250	110	140	0.85	0.15	0.15
L4/2	2.0	27	17	22	9.0	13.0	175	77	98			
L4/3	3.0	29	18	30	12.0	18.0	230	101	129			
L4	4.0	45	28	28	15.0	13.0	190	120	70			
L4/5	5.0	56	35	25	13.0	12.0	158	100	58			
L8/3	3.0	21	12	65	39.0	26.0	510	326	184	1.5	0.61	0.61
L8/4	4.0	30	17	50	30.0	20.0	390	250	140			
L8/5	5.0	35	20	40	24.0	16.0	310	200	110			
L8/6.3	6.3	45	30	38	18.0	20.0	315	174	141			
L8	8.0	57	38	31	15.0	16.0	245	135	110			
L8/10	10.0	71	47	26	12.5	13.5	205	113	92			
L16/8	8.0	55	41	36	22.0	14.0	350	183	167	2.6	2	2
L16/10	10.0	48	36	58	35.0	23.0	680	355	325			
L16/13	13.0	60	34	50	30.0	20.0	560	293	267			
L16	16.0	76	48	47	28.0	19.0	460	240	220			
L16/20	20.0	93	59	38	23.0	15.0	390	204	186			
L32/14	14.0	65	50	46	27.0	19.0	400	210	290	3.9	4.5	4.5
L32/18	18.0	65	44	70	45.0	25.0	600	325	275			
L32/23	23.0	82	56	75	40.0	35.0	680	300	380			
L32	32.0	115	78	53	28.0	25.0	490	215	275			
L32/40	40.0	140	95	45	24.0	21.0	440	194	246			
L60/25	25.0	130	66	47	25.0	22.0	540	220	320	5.8	6.3	6.3
L60/38	38.0	140	60	60	24.0	36.0	800	290	510			
L60/50	50.0	175	75	50	20.0	30.0	665	240	425			
L60	60.0	210	90	42	17.0	25.0	580	210	370			
L80/25	25.0	95	56	103	48.0	55.0	1 600	690	710	8.4	15	15
L80/35	35.0	128	75	73	34.0	39.0	1 200	520	680			
L80/50	50.0	160	94	90	42.0	48.0	1 920	830	1 090			
L80/63	63.0	170	100	72	34.0	38.0	1 550	670	880			
L80	80.0	220	130	57	27.0	30.0	1 200	520	680			
L80/100	100.0	280	165	49	24.0	25.0	990	430	560			
L150/60	60.0	135	81	55	27.5	27.5	920	470	450	12.5	29	29
L150/80	80.0	180	108	40	20.0	20.0	690	350	340			
L150/100	100.0	180	108	93	48.0	45.0	1 300	700	600			
L150/125	125.0	225	135	85	44.0	41.0	1 200	650	550			
L150	150.0	270	160	78	33.0	45.0	1 080	480	600			
L260/100	100.0	210	95	205	82.0	123.0	1 775	605	1 170	21.0	73	73
L260/145	145.0	230	170	180	72.0	108.0	1 200	440	790			
L260/180	180.0	230	100	185	73.0	112.0	2 500	850	1 650			
L260/200	200.0	260	120	178	70.0	108.0	2 720	920	1 800			
L260/240	240.0	312	140	170	67.0	103.0	2 300	570	1 530			
L260	260.0	340	150	165	65.0	100.0	2 100	700	1 400			
L260/315	315.0	410	180	150	60.0	90.0	1 750	590	1 160			
L400/265	265.0	260	140	275	155.0	120.0	3 100	2 000	1 100	32.0	200	200
L400/300	300.0	290	150	260	125.0	135.0	2 800	1 540	1 260			
L400/360	360.0	350	165	255	125.0	130.0	2 660	1 440	1 220			
L400	400.0	390	185	230	110.0	120.0	2 400	1 300	1 100			
L400/600	600.0	585	265	175	55.0	120.0	1 400	300	1 100			

[1)] Values refer to brake in its delivery state

© Siemens AG 2017

Technical specifications (continued) [1)]

Working capacity for brakes L

Brake type	Rated braking torque T_{br}	Power consumption	Working capacity				Working capacity with wear-resistant friction lining			
			Per braking operation W_{1max}	Friction energy until the brake lining is replaced W_{Tot}	Friction energy until the air gap is readjusted W_V		Per braking operation W_{1max}	Friction energy until the brake lining is replaced W_{Tot}	Friction energy until the air gap is readjusted W_V	
	At 100 rpm	At +20 °C				With over-excitation				With over-excitation
	Nm	W	kJ	MJ	MJ	MJ	kJ	MJ	MJ	MJ
L4/1.4	1.4	20	3	156	46.8	52	3	312	94	104
L4/2	2.0			176		59		351		117
L4/3	3.0			170	39.6	57		339	80	113
L4	4.0			180	36.0	60		360	72	120
L4/5	5.0			176	23.4	59		351	46	117
L8/3	3.0	25	7.5	324	86.4	108	7.5	648	173	216
L8/4	4.0									
L8/5	5.0				75.6				151	
L8/6.3	6.3							756		
L8	8.0				64.8			648	130	
L8/10	10.0				54.0				108	
L16/8	8.0	30	12	405	108.0	162	12	810	216	324
L16/10	10.0									
L16/13	13.0									
L16	16.0									
L16/20	20.0			396	80.0	158		792	160	317
L32/14	14.0	40	24	948	285.0	284	7	1 896	570	568
L32/18	18.0					283				
L32/23	23.0				260.0			1 885	518	
L32	32.0				212.0	284		1 888	425	
L32/40	40.0				165.0			1 893	331	
L60/25	25.0	50	30	1 276	306.0	306	18	2 560	612	612
L60/38	38.0				280.0			2 553	560	
L60/50	50.0			1 320	238.0	317		2 640	476	635
L60	60.0			1 322						
L80/25	25.0	55	36	2 310	396.0	396	11	4 536	792	792
L80/35	35.0									
L80/50	50.0									
L80/63	63.0									
L80	80.0									
L80/100	100.0				260.0	389			519	778
L150/60	60.0	85	60	2 295	612.0	612	36	4 590	1 224	1 224
L150/80	80.0									
L150/100	100.0									
L150/125	125.0									
L150	150.0									
L260/100	100.0	100	80	4 680	936.0	1 287	10	7 020	1 872	2 574
L260/145	145.0									
L260/180	180.0			3 510						
L260/200	200.0									
L260/240	240.0									
L260	260.0									
L260/315	315.0	130		3 489	756.0	1 279		6 978	1 512	2 559
L400/265	265.0	110	120	6 480	1 440.0	1 872	28	12 960	2 880	3 744
L400/300	300.0									
L400/360	360.0									
L400	400.0									
L400/600	600.0				576.0				1 152	

[1)] Values refer to brake in its delivery state

© Siemens AG 2017

Technical specifications (continued) [1)]

No-load switching frequency for brakes L

Motor type	Power 4-pole at 50 Hz kW	Brake type	Overexcitation Without 1/h	With 1/h	Without 1/h	With 1/h	Without 1/h	With 1/h	Without 1/h	With 1/h
			No-load switching frequency (Z_A)							
			4-pole		2-pole		6-pole		8-pole	
LA63..	0.12	L4/5, L4	-	-	-	-	-	-	-	-
	0.18	L4/3, L4/2, L4/1,4	-	-	-	-	-	-	-	-
LA71..	0.25	L4/5, L4	7 300	9 500	2 500	3 200	10 500	14 000	14 500	19 000
	0.37	L4/3, L4/2, L4/1,4	12 500	13 500	4 300	4 500	18 500	20 000	25 000	27 000
		L8/10, L8, L8/6,3	6 000	7 600	1 800	2 500	9 000	11 000	12 000	15 000
		L8/5, L8/4	8 900	11 000	2 900	3 500	13 000	16 000	17 500	22 000
		L8/3	11 000	12 000	3 500	4 000	16 500	18 000	22 000	24 000
LE80.. LE80..E LE80..P	0.55	L4/5, L4	9 000	9 500	2 900	3 100	13 500	14 000	-	-
	0.75	L4/3, L4/2, L4/1,4	10 500	11 500	3 500	3 800	15 500	16 500	-	-
		L8/10, L8, L8/6,3	6 300	7 500	2 100	2 500	9 400	11 000	-	-
		L8/5, L8/4, L8/3	9 500	10 000	3 100	3 300	14 000	15 000	-	-
		L16	6 500	7 500	2 100	2 500	9 700	11 000	-	-
		L16/13, L16/10, L16/8	7 500	8 000	2 500	2 600	11 000	12 000	-	-
LE90.. LE90..E LE90..P	1.1	L8/10, L8, L8/6,3	6 500	7 000	2 100	2 300	9 700	10 500	-	-
	1.5	L8/5, L8/4, L8/3	8 000	8 500	2 600	2 800	12 000	12 500	-	-
		L16/20, L16	3 200	4 300	1 000	1 400	4 800	6 400	-	-
		L16/13, L16/10, L16/8	6 500	7 000	2 100	2 300	9 700	10 500	-	-
		L32	2 200	3 000	700	1 000	3 300	4 500	-	-
		L32/23, L32/18	3 300	4 200	1 100	1 400	4 900	6 300	-	-
		L32/14	5 500	6 000	1 800	2 000	8 200	12 000	-	-
LE100.. LE100..E LE100..P	2.2	L16/20, L16	6 000	6 500	2 000	2 100	9 000	9 700	12 000	13 000
	3.0	L16/13, L16/10, L16/8	6 500	7 000	2 100	2 300	9 700	10 500	14 000	14 000
		L32/40, L32	3 200	4 600	1 000	1 500	4 800	6 900	6 400	9 200
		L32/23, L32/18, L32/14	6 000	6 500	2 000	2 100	9 000	9 700	12 000	13 000
		L60/50	1 100	2 100	350	700	1 600	3 100	2 200	4 200
		L60/38, L60/25	3 200	4 600	1 000	1 500	4 800	6 900	9 200	9 200
LE112.. LE112..E LE112..P	4.0	L32/40, L32	3 300	3 500	1 100	1 100	4 900	5 200	6 600	7 000
		L32/23, L32/18, L32/14	3 600	3 800	1 200	1 200	5 400	5 700	7 600	7 600
		L60, L60/50	2 600	3 200	850	1 050	3 900	4 800	5 200	6 400
		L60/38, L60/25	3 200	3 600	1 050	1 200	4 800	5 400	7 200	7 200
LE132.. LE132..E LE132..P	5.5	L80/100, L80	1 850	2 050	600	6 500	2 700	3 000	3 700	4 100
	7.5	L80/63, L80/50	2 050	2 200	650	700	3 000	3 300	4 100	4 400
		L80/35, L80/25	2 200	2 350	700	750	3 300	3 500	4 400	4 700
		L150, L150/125	1 200	1 500	400	500	1 800	2 200	2 400	3 000
		L150/100, L150/80, L150/60	1 900	2 050	600	650	2 800	3 000	3 800	4 100
LE160.. LE160..E LE160..P	11.0	L150, L150/125	1 400	1 550	450	500	2 100	2 300	2 800	3 100
	15.0	L150/100, L150/80, L150/60	1 650	1 750	550	550	2 400	2 600	3 300	3 500
		L260, L260/240	850	1 200	250	400	1 200	1 800	1 700	2 400
		L260/200, L260/180	1 050	1 300	350	400	1 500	1 900	2 100	2 600
		L260/145, L260/100	1 450	1 550	450	500	2 100	2 300	2 900	3 100
LES180..E	18.5	L260/315, L260, L260/240	500	550	320	330	750	800	1 000	1 100
	22.0	L260/200, L260/180, L260/145, L260/100	550	600	174	200	800	900	1 100	1 200
LES200..E	30.0	L260/315, L260, L260/240	450	500	150	150	650	750	900	1 000
		L260/200, L260/180, L260/145, L260/100	500	525	150	175	750	750	1 000	1 050
		L400, L400/360, L400/300, L400/265	400	425	125	125	600	600	800	850

Conversion factors for no-load switching frequency:
60 Hz operation 0.75 x Z_A
IE3 motors 0.1 x Z_A

No-load switching frequencies for IE1 motors on request.

[1)] Values refer to brake in its delivery state

© Siemens AG 2017

Technical specifications (continued) [1)]

Disconnection times, application times and moments of inertia for brakes FDX

Brake type	Rated braking torque	Solenoid voltage	Disconnection time		Application time	Response time	Rise time	Application time	Response time	Rise time	Weight	Moment of inertia
	T_{br}		t_2		$t_1 = t_{11} + t_{12}$	t_{11}	t_{12}	$t_1 = t_{11} + t_{12}$	t_{11}	t_{12}		J_B
	At 100 rpm		Standard excitation	Over-excitation	AC and DC switched or DC switched			AC switched				
	Nm	V_{DC}	ms	ms	ms	ms	ms	ms	ms	ms	kg	10^{-4} kgm^2
FDX30/265	265	All	-	173	255	125	130	1 710	1 360	350	45	195
FDX30/300	300		-	180	250	120	130	1 620	1 270	350	45	195
FDX30/360	360		-	192	243	113	130	1 460	1 110	350	45	195
FDX30/400	400		-	200	235	105	130	1 350	1 000	350	45	195
FDX30/500	500		-	220	220	90	130	800	740	350	45	195
FDX30/650	650		-	250	200	70	130	690	340	350	45	195
FDX30/750	750	103	-	260	190	60	130	670	320	350	45	195
FDX30/750	750	180; 205	-	200	190	60	130	620	270	350	45	195
FDX30/850	850	103	-	270	180	50	130	600	250	350	45	195
FDX30/850	850	180; 205	-	210	180	50	130	550	200	350	45	195
FDX40/650	650	All	-	280	390	230	160	2 600	2 100	500	80	445
FDX40/750	750		-	315	370	210	160	2 230	1 730	500	80	445
FDX40/850	850		-	350	350	190	160	1 860	1 360	500	80	445
FDX40/1000	1 000		-	400	320	160	160	1 300	800	500	80	445

Working capacity for brakes FDX

Brake type	Rated braking torque	Solenoid voltage	Power consumption	Working capacity			
				Per braking operation	Friction energy until the brake lining is replaced	Friction work until the air gap is readjusted W_V	
	At 100 rpm		At +20 °C	W_{1max}	W_{Tot}		With overexcitation
	Nm	V_{DC}	W	kJ	MJ	MJ	MJ
FDX30/265	265	All	560/140	150	3 700	-	-
FDX30/300	300		560/140	150	3 700		
FDX30/360	360		560/140	150	3 700		
FDX30/400	400		560/140	150	3 700		
FDX30/500	500		560/140	150	3 700		
FDX30/650	650		560/140	150	3 700		
FDX30/750	750	103	560/140	150	3 700		
FDX30/750	750	180; 205	880/220	150	3 700		
FDX30/850	850	103	560/140	150	3 700		
FDX30/850	850	180; 205	880/220	150	3 700		
FDX40/650	650	All	560/140	200	4 000	-	-
FDX40/750	750		560/140	200	4 000		
FDX40/850	850		560/140	200	4 000		
FDX40/1000	1 000		560/140	200	4 000		

[1)] Values refer to brake in its delivery state

© Siemens AG 2017

Encoder

Overview

Encoder	Motor frame size												Order code	Technical information
	63	71	80	90	100	112	132	160	180	200	225	250		➞ page
Incremental encoder														
Incremental encoder 1XP8012														
1XP8012-20	✓	✓	✓	✓	✓	✓	✓	✓	✓	✓			**Q50**	page 11/41
1XP8012-21	✓	✓	✓	✓	✓	✓	✓	✓	✓	✓			**Q51**	page 11/41
1XP8012-22	✓	✓	✓	✓	✓	✓	✓	✓	✓	✓			**Q52**	page 11/41
1XP8012-10	✓	✓	✓	✓	✓	✓	✓	✓	✓	✓			**Q53**	page 11/41
1XP8012-11	✓	✓	✓	✓	✓	✓	✓	✓	✓	✓			**Q54**	page 11/41
1XP8012-12	✓	✓	✓	✓	✓	✓	✓	✓	✓	✓			**Q55**	page 11/41
Incremental encoder 1XP8032														
1XP8032-20	✓	✓	✓	✓	✓	✓	✓	✓	✓	✓			**Q44**	page 11/42
1XP8032-21	✓	✓	✓	✓	✓	✓	✓	✓	✓	✓			**Q45**	page 11/42
1XP8032-22	✓	✓	✓	✓	✓	✓	✓	✓	✓	✓			**Q46**	page 11/42
1XP8032-10	✓	✓	✓	✓	✓	✓	✓	✓	✓	✓			**Q47**	page 11/42
1XP8032-11	✓	✓	✓	✓	✓	✓	✓	✓	✓	✓			**Q48**	page 11/42
1XP8032-12	✓	✓	✓	✓	✓	✓	✓	✓	✓	✓			**Q49**	page 11/42
Incremental encoder 1XP8022														
1XP8022-20	✓	✓	✓	✓	✓	✓	✓	✓	✓	✓			**Q56**	page 11/43
1XP8022-21	✓	✓	✓	✓	✓	✓	✓	✓	✓	✓			**Q57**	page 11/43
1XP8022-22	✓	✓	✓	✓	✓	✓	✓	✓	✓	✓			**Q58**	page 11/43
1XP8022-10	✓	✓	✓	✓	✓	✓	✓	✓	✓	✓			**Q59**	page 11/43
1XP8022-11	✓	✓	✓	✓	✓	✓	✓	✓	✓	✓			**Q60**	page 11/43
1XP8022-12	✓	✓	✓	✓	✓	✓	✓	✓	✓	✓			**Q61**	page 11/43
Resolver [1]														
1XP8013-10	✓	✓	✓	✓	✓	✓	✓	✓	✓	✓			**Q85**	page 11/44
1XP8023-11	✓	✓	✓	✓	✓	✓	✓	✓	✓	✓			**Q86**	page 11/44
1XP8013-11	✓	✓	✓	✓	✓	✓	✓	✓	✓	✓			**Q87**	page 11/44
1XP8023-10	✓	✓	✓	✓	✓	✓	✓	✓	✓	✓			**Q88**	page 11/44
Absolute encoder														
1XP8024-21	✓	✓	✓	✓	✓	✓	✓	✓	✓	✓			**Q79**	page 11/46
1XP8014-20	✓	✓	✓	✓	✓	✓	✓	✓	✓	✓	✓	✓	**Q80**	page 11/45
1XP8024-20	✓	✓	✓	✓	✓	✓	✓	✓	✓	✓	✓	✓	**Q81**	page 11/45
1XP8014-10	✓	✓	✓	✓	✓	✓	✓	✓	✓	✓	✓	✓	**Q82**	page 11/45
1XP8024-10	✓	✓	✓	✓	✓	✓	✓	✓	✓	✓	✓	✓	**Q83**	page 11/45
Rugged encoders														
Leine und Linde LL 861 900 220						✓	✓	✓	✓	✓	✓	✓	**Q92**	page 11/47
Hübner HOG 9 D 1024						✓	✓	✓	✓	✓	✓	✓	**Q93**	page 11/47
Hübner HOG 10 D 1024							✓	✓	✓	✓	✓	✓	**Q94**	page 11/48
Functionally safe rotary encoder														
Incremental encoder IN 8.5834														
IN 8.5834FS2		✓	✓	✓	✓	✓	✓	✓	✓	✓			**Q42**	page 11/49
IN 8.5834FS3		✓	✓	✓	✓	✓	✓	✓	✓	✓			**Q43**	page 11/49
Absolute encoder IA 8.5883														
IA 8.5883FS2		✓	✓	✓	✓	✓	✓	✓	✓	✓			**Q77**	page 11/51
IA 8.5883FS3		✓	✓	✓	✓	✓	✓	✓	✓	✓			**Q78**	page 11/51
Mechanical protection														
Encoder under cover		✓	✓	✓	✓	✓	✓	✓	✓	✓			**Q95**	page 11/55

[1] Cannot be combined with brake motor

© Siemens AG 2017

Incremental encoders

Incremental encoder 1XP8012

The incremental encoder is available up to motor frame size 200.

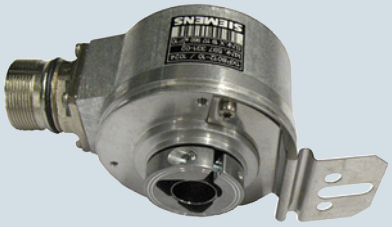

Technical specifications

Incremental encoder 1XP8012	**-11**	**-10**	**-12**	**-21**	**-20**	**-22**
Pulses per revolution	2 048	1 024	512	2 048	1 024	512
Incremental signals	HTL			TTL		
Supply voltage U_P	10 … 30 V_{DC}			5 V_{DC} ± 10 %		
Maximum current consumption without load	150 mA			120 mA		
Permissible load per output	$I_{Load} \leq$ 100 mA (except for $\overline{U_{aS}}$)			$I_{Load} \leq$ 20 mA		
Outputs	2 short-circuit-proof square-wave pulses U_{a1}, U_{a2} (maximum 1 min) 2 short-circuit-proof square-wave pulses $\overline{U_{a1}}$, $\overline{U_{a2}}$ (maximum 1 min) Zero pulse U_{a0} Zero pulse $\overline{U_{a0}}$ Fault-detection signal $\overline{U_{aS}}$			Square-wave pulses U_{a1}, U_{a2} Square-wave pulses $\overline{U_{a1}}$, $\overline{U_{a2}}$ Zero pulse U_{a0} Zero pulse $\overline{U_{a0}}$ Fault-detection signal $\overline{U_{aS}}$		
Signal level	$U_{High} \geq$ 21 V at $-I_{High}$ = 20 mA $U_{Low} \leq$ 2.8 V I_{Low} = 20 mA (U_p = 24 V)			$U_{High} \geq$ 2.5 V at $-I_{High}$ = 20 mA $U_{Low} \leq$ 0.5 V I_{Low} = 20 mA		
Minimum edge interval	0.8 µs at 160 kHz			0.45 µs at 300 kHz		
Switching times (10 … 90 %)	t_+ t_- ≤ 200 ns (with 1 m cable), except for $\overline{U_{aS}}$			t_+ t_- ≤ 30 ns (with 1 m cable)		
Maximum frequency	160 kHz			300 kHz		
Moment of inertia of rotor	4.3 x 10^{-6} kgm^2					
Maximum mechanical speed	6 000 rpm					
Vibration (55 … 2 000 Hz)	≤ 150 m/s^2 (EN 60068-2-6)					
Shock (6/2 ms)	≤ 1 000 m/s^2 (EN 60068-2-27)/≤ 2 000 m/s^2 (EN 60068-2-27)					
Degree of protection	IP66					
Ambient temperature range	-20 °C to +40 °C					
Connection system → page 11/57	12-pole flange socket, 0° coding					
Weight, approx.	0.30 kg					
Certification	CE, cUL-Rus					
Order code	**Q54** [1]	**Q53**[1]	**Q55**[1]	**Q51**[1]	**Q50**[1]	**Q52**[1]

[1] For worm geared motors S, the incremental encoder is available only for motor frame size 71.

Connection assignment

For cable available as an option, see "Encoder accessories (continued)" from page 11/58.

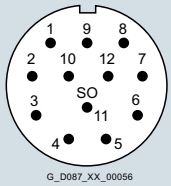

G_D087_XX_00056

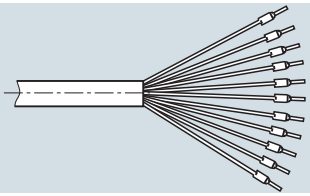

	Voltage supply				**Incremental signals**						**Other signals**	
Connection	U_P	Sensor U_P	0 V	Sensor 0 V	U_{a1}	$\overline{U_{a1}}$	U_{a2}	$\overline{U_{a2}}$	U_{a0}	$\overline{U_{a0}}$	$\overline{U_{aS}}$	Free
Flange socket	12	2	10	11	5	6	8	1	3	4	7	9
Core color	brown/green	blue	white/green	white	brown	green	gray	pink	red	black	violet	yellow

© Siemens AG 2017

Incremental encoders (continued)

Incremental encoder 1XP8032

The incremental encoder is available up to motor frame size 200.

Technical specifications

Incremental encoder 1XP8032	-11	-10	-12	-21	-20	-22
Pulses per revolution	2 048	1 024	512	2 048	1 024	512
Incremental signals	HTL			TTL		
Supply voltage U_P	10 … 30 V_{DC}			5 V_{DC} ± 10 %		
Maximum current consumption without load	150 mA			120 mA		
Permissible load per output	$I_{Load} \leq$ 100 mA (except for $\overline{U_{aS}}$)			$I_{Load} \leq$ 20 mA		
Outputs	2 short-circuit-proof square-wave pulses U_{a1}, U_{a2} (maximum 1 min) 2 short-circuit-proof square-wave pulses $\overline{U_{a1}}$, $\overline{U_{a2}}$ (maximum 1 min) Zero pulse U_{a0} Zero pulse $\overline{U_{a0}}$ Fault-detection signal $\overline{U_{aS}}$			Square-wave pulses U_{a1}, U_{a2} Square-wave pulses $\overline{U_{a1}}$, $\overline{U_{a2}}$ Zero pulse U_{a0} Zero pulse $\overline{U_{a0}}$ Fault-detection signal $\overline{U_{aS}}$		
Signal level	$U_{High} \geq$ 21 V at $-I_{High}$ = 20 mA $U_{Low} \leq$ 2.8 V I_{Low} = 20 mA (U_p = 24 V)			$U_{High} \geq$ 2.5 V at $-I_{High}$ = 20 mA $U_{Low} \leq$ 0.5 V I_{Low} = 20 mA		
Minimum edge interval	0.8 µs at 160 kHz			0.45 µs at 300 kHz		
Switching times (10 … 90 %)	t_+ t_- ≤ 200 ns (with 1 m cable), except for $\overline{U_{aS}}$			t_+ t_- ≤ 30 ns (with 1 m cable)		
Maximum frequency	160 kHz			300 kHz		
Moment of inertia of rotor	4.3 x 10^{-6} kgm^2					
Maximum mechanical speed	6 000 rpm					
Vibration (55 … 2 000 Hz)	≤ 150 m/s^2 (EN 60068-2-6)					
Shock (6/2 ms)	≤ 1 000 m/s^2 (EN 60068-2-27)/≤ 2 000 m/s^2 (EN 60068-2-27)					
Degree of protection	IP66					
Ambient temperature range	-20 °C to +40 °C					
Connection system → page 11/57	0.8 m cable with 12-pole coupling socket, 0° coding					
Weight, approx.	0.30 kg					
Certification	CE, cUL-Rus					
Order code	**Q48** [1]	**Q47** [1]	**Q49** [1]	**Q45** [1]	**Q44** [1]	**Q46** [1]

[1] For worm geared motors S, the incremental encoder is available only for motor frame size 71.

Connection assignment

For cable available as an option, see "Encoder accessories (continued)" from page 11/58.

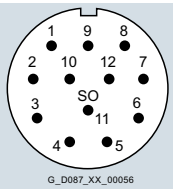

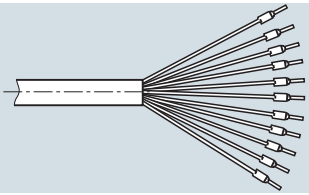

	Voltage supply				Incremental signals						Other signals	
Connection	U_P	Sensor U_P	0 V	Sensor 0 V	U_{a1}	$\overline{U_{a1}}$	U_{a2}	$\overline{U_{a2}}$	U_{a0}	$\overline{U_{a0}}$	$\overline{U_{aS}}$	Free
Flange socket	12	2	10	11	5	6	8	1	3	4	7	9
Core color	brown/green	blue	white/green	white	brown	green	gray	pink	red	black	violet	yellow

© Siemens AG 2017

Incremental encoders (continued)

Incremental encoder 1XP8022

The incremental encoder is available up to motor frame size 200.



Technical specifications

Incremental encoder 1XP8022	**-11**	**-10**	**-12**	**-21**	**-20**	**-22**
Pulses per revolution	2 048	1 024	512	2 048	1 024	512
Incremental signals	HTL			TTL		
Supply voltage U_B	8 … 30 V_{DC} (reverse-polarity protected)			5 V_{DC} ± 5 % (reverse-polarity protected)		
Maximum current consumption without load	≤ 100 mA					
Permissible load per output	I_L ≤ 70 mA					
Outputs	2 square-wave pulses A, B 2 square-wave pulses $\overline{A}$, $\overline{B}$, Zero pulse N Zero pulse $\overline{N}$					
Signal level	U_{High} ≥ U_B - 3 V U_{Low} ≤ 1.5 V			U_{High} ≥ 2.5 V U_{Low} ≤ 0.5 V		
Minimum edge interval	500 ns			≤ 200 ns		
Switching times (10 … 90 %)	≤ 1 µs					
Maximum frequency	120 kHz					
Moment of inertia of rotor	6 x 10^{-6} kgm^2					
Maximum mechanical speed	8 000 rpm					
Vibration (55 … 2 000 Hz)	≤ 100 m/s^2 (EN 60068-2-6)					
Shock (11 ms)	≤ 1 000 m/s^2 (EN 60068-2-27)					
Degree of protection	IP66					
Ambient temperature range	-20 °C to +40 °C					
Connection system → page 11/57	Cable terminal box					
Weight, approx.	0.35 kg					
Certification	CE, cUL-Rus					
Order code	**Q60** [1]	**Q59** [1]	**Q61** [1]	**Q57** [1]	**Q56** [1]	**Q58** [1]

[1] For worm geared motors S, the incremental encoder is available only for motor frame size 71.

Connection assignment

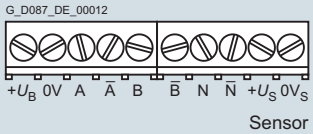

For cable available as an option, see "Encoder accessories (continued)" from page 11/58.

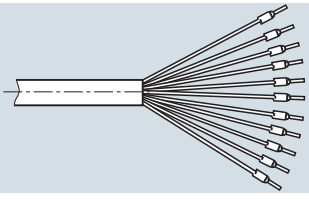

	Connections									
Connection	+U_B	0V	A	$\overline{A}$	B	$\overline{B}$	N	$\overline{N}$	+U_S	0V_S
Cable terminal box										
Core color	red	blue	green	brown	gray	black	pink	white	yellow	violet

© Siemens AG 2017

Resolvers 1XP8013 and 1XP8023 [1)]

Resolvers are available up to motor frame size 200.

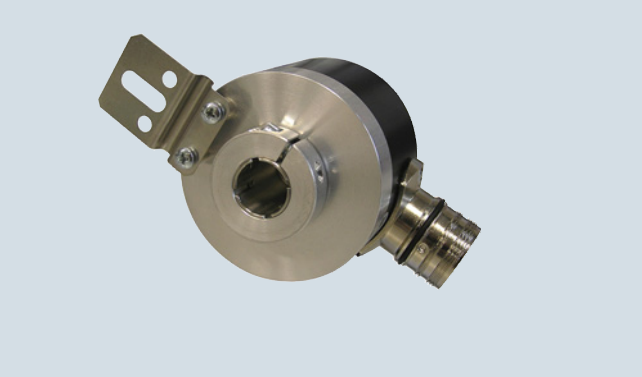

Fig. 11/47 Resolver 1XP8013

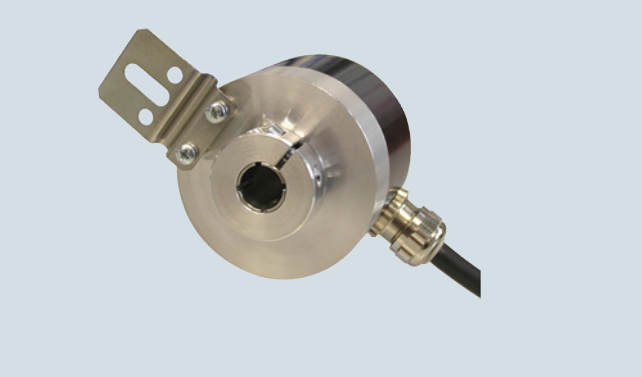

Fig. 11/48 Resolver 1XP8023

Technical specifications

Resolver	1XP8013-10	1XP8023-10	1XP8013-11	1XP8023-11
Input voltage	7 V_{RMS}		7 V_{RMS}	
Current consumption (maximum)	120 mA		65 mA	
Input frequency	5 kHz		10 kHz	
Phase shift	0° (+25°)		0° (± 10 °)	
Zero voltage (maximum)	50 mV		50 mV	
Pole pairs	1		1	
Primary side	R1 - R2		R1 - R2	
Impedance				
Z_{ro}	55 + j50 (± 20 %) Ω		70 + j100 (± 20 %) Ω	
Z_{so}	115 + j175 (± 20 %) Ω		180 + j300 (± 20 %) Ω	
Z_{ss}	115 + j160 (± 20 %) Ω		175 + j275 (± 20 %) Ω	
DC resistance				
Rotor	36 (± 10 %) Ω		36 (± 10 %) Ω	
Stator	60 (± 10 %) Ω		60 (± 10 %) Ω	
Maximum permissible mechanical speed	≤ 8 000 rpm		≤ 8 000 rpm	
Permissible electrical speed	≤ 8 000 rpm		≤ 8 000 rpm	
Vibration (55 … 2 000 Hz)	≤ 100 m/s²		≤ 100 m/s²	
Shock (6 ms)	≤ 1 000 m/s²		≤ 1 000 m/s²	
Connection system → page 11/57	Flange socket, 0° coding	1 m cable with coupling socket	Flange socket, 0° coding	1 m cable with coupling socket
Degree of protection	IP65		IP65	
Ambient temperature range	-20 °C to +40 °C			
Weight, approx.	320 g	500 g	320 g	500 g
Certification	CE, cUL-Rus			
Order code	**Q85 [1)]**	**Q88 [1)]**	**Q87 [1)]**	**Q86 [1)]**

[1)] For worm geared motors S, the resolver is available only for motor frame size 71.

Connection assignment

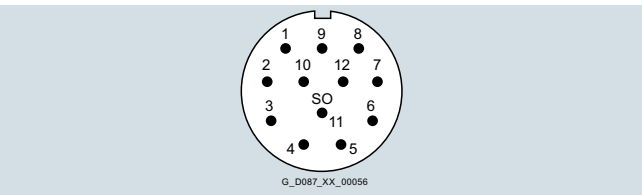

For cable available as an option, see "Encoder accessories (continued)" from page 11/58.

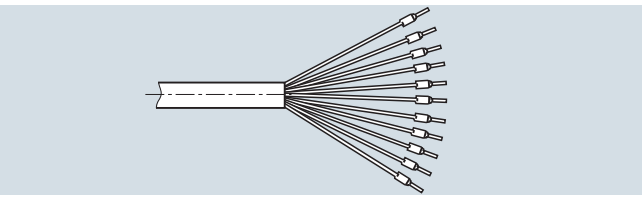

	Input voltage		Sine tap		Cosine tap	
Connection	R1	R2	S1	S3	S2	S4
Flange socket	10	7	11	12	1	2
Core color	pink	white	red	blue	yellow	violet

[1)] Resolver cannot be combined with brake motor

© Siemens AG 2017

Absolute encoders 1XP8014 and 1XP8024

Absolute encoders are available up to motor frame size 250.

The multiturn absolute encoder can be shipped with EnDAT protocol or SSI protocol and mounted on the shaft.

Technical specifications

Absolute encoder	**1XP8014-20**	**1XP8024-20**	**1XP8014-10**	**1XP8024-10**
Supply voltage U_P	10 … 30 V		5 V ± 5 %	
Maximum current consumption without load	≤ 200 mA			
Absolute position values	SSI		EnDAT 2.1	
• Code	Gray		Dual	
• Positions per revolution	8 192 (13 bit)			
• Differentiable revolutions	4 096			
Incremental signals	~1 V_{pp}			
• Pulses per revolution	512		2 048	
• Outputs	Sine/cosine pulses A, B			
• Limit frequency -3 dB	≥ 200 kHz			
• Signal size	0.8 … 1.2 V_{pp}			
Moment of inertia of rotor	4.3 x 10^{-6} kgm^2			
Maximum permissible mechanical speed	≤ 6 000 rpm			
Permissible electrical speed with system accuracy	≤ 1 500 rpm/± 1 LSB ≤ 10 000 rpm/± 50 LSB			
Vibration (55 … 2 000 Hz)	15 g	30 g	15 g	30 g
Shock (6 ms)	100 g			
Degree of protection	IP66			
Ambient temperature range	-20 °C to +40 °C			
Connection system → page 11/57	Flange socket, 17-pole with 0° coding	1 m cable with coupling socket	Flange socket, 17-pole with 0° coding	1 m cable with coupling socket
Weight, approx.	0.3 kg			
Certification	CE, cUL-Rus			
Order code	**Q80** [1]	**Q81** [1]	**Q82** [1]	**Q83** [1]

[1] For worm geared motors S, the absolute encoder is available only for motor frame size 71.

Connection assignment

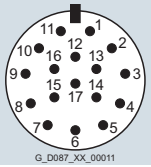

For cable available as an option, see "Encoder accessories (continued)" from page 11/58.

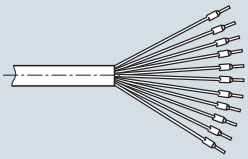

	Voltage supply					**Incremental signals**				**Absolute position values**				**Other signals**	
Connection	U_P	Sensor U_P	0 V	Sensor 0 V	Inner shield	A+	A-	B+	B-	DATA	$\overline{DATA}$	CLOCK	$\overline{CLOCK}$	Rot. direction	Zeros
Flange socket (SSI)	7	1	10	4	11	15	16	12	13	14	17	8	9	2	5
Core color	brown/ green	blue	white/ green	white		green/ black	yellow/ black	blue/ black	red/ black	gray	pink	violet	yellow	black	green

	Voltage supply					**Incremental signals**				**Absolute position values**					
Connection	U_P	Sensor U_P	0 V	Sensor 0 V	Inner shield	A+	A-	B+	B-	DATA	$\overline{DATA}$	CLOCK	$\overline{CLOCK}$	-	-
Flange socket (EnDAT 2.1)	7	1	10	4	11	15	16	12	13	14	17	8	9		
Core color	brown/ green	blue	white/ green	white		green/ black	yellow/ black	blue/ black	red/ black	gray	pink	violet	yellow	black	green

© Siemens AG 2017

Absolute encoder 1XP8024-21

The absolute encoder is available with SSI protocol and HTL incremental signals up to motor frame size 200. This is ideally suited to SINAMICS G120D.

Technical specifications

Absolute encoder	**1XP8024-21**
Supply voltage U_P	10 … 30 V
Maximum current consumption without load	28 mA at 24 V
Absolute position values	SSI
• Code	Gray
• Positions per revolution	8 192 (13 bit)
• Differentiable revolutions	4 096
• Calculation time t_{cal}	≤ 5 µs
Incremental signals	HTL
• Outputs	2 short-circuit-proof square-wave pulses U_{a1}, U_{a2} (maximum 1 min) 2 short-circuit-proof square-wave pulses $\overline{U_{a1}}$, $\overline{U_{a2}}$ (maximum 1 min)
• Signal level	U_{High} U_P - 2.5 V I_{High} = 20 mA U_{Low} ≤ 1.6 V I_{Low} = 20 mA
• Pulses per revolution	2 048
• Sampling rate	≥ 205 kHz
• Edge interval	0.43 µs
Starting torque at 20 °C	≤ 0.01 Nm
Moment of inertia of rotor	4.3 x 10^{-6} kgm^2
Maximum permissible mechanical speed	≤ 6 000 rpm
Vibration (55 … 2 000 Hz)	≤ 150 m/s^2 (EN 60068-2-6)
Shock (6 ms)	≤ 1 000 m/s^2 (EN 60068-2-27)
Degree of protection	IP66
Ambient temperature range	-20 °C to +40 °C
Connection system ➞ page 11/57	1 m cable with 17-pole coupling socket, 0° coding
Weight, approx.	0.3 kg
Certification	CE, cUL-Rus
Order code	**Q79** [1]

[1] For worm geared motors S, the absolute encoder can only be selected for motor frame size 71.

Connection assignment

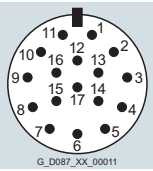

For cable available as an option, see "Encoder accessories (continued)" from page 11/58.

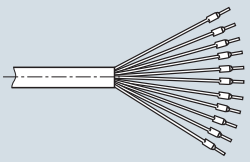

	Voltage supply					**Incremental signals**				**Absolute position values**				**Other signals**	
Connection	U_P	Sensor U_P	0 V	Sensor 0 V	Inner shield	U_{a1}	$\overline{U_{a1}}$	U_{a2}	$\overline{U_{a2}}$	DATA	$\overline{DATA}$	CLOCK	$\overline{CLOCK}$	Count. direction	Zeros
Flange socket (SSI)	7	1	10	4	11	15	16	12	13	14	17	8	9	2	5
Core color	brown/ green	blue	white/ green	white		green/ black	yellow/ black	blue/ black	red/ black	gray	pink	violet	yellow	black	green

© Siemens AG 2017

Rugged encoders

Rotary pulse encoder LL 861 900 220



Fig. 11/49 Leine und Linde LL 861 900 220

With its rugged design, this rotary pulse encoder is also suitable for demanding operating environments. It is resistant to shock and vibration and has insulated bearings.

The rotary pulse encoder LL 861 900 220 is available in combination with self-ventilated motors in size 112 or larger, or in combination with forced-ventilated motors in size 160 or larger.

The version of the rotary pulse encoder with a diagnostics system (ADS) can be supplied by Leine and Linde.

Technical specifications

Supply voltage U_P	**+9 … +30 V**
Current consumption without load	Max. 80 mA
Permissible load current per output	40 mA
Pulses per revolution	1 024
Outputs	6 short-circuit proof square-wave pulses A, A', B, B', 0, 0', high current HTL
Pulse offset between the two outputs	90° ± 25° electrical
Output amplitude	$U_{High} \geq U_B$ - 4 V $U_{Low} \leq$ 2.5 V
Pulse duty factor	1:1 ± 10 %
Rate of change	50 V/µs (without load)
Maximum frequency	100 kHz for 350 m cable
Maximum speed	4 000 rpm
Degree of protection	IP66
Ambient temperature range	-20 °C to +40 °C
Maximum permissible radial cantilever force	300 N
Maximum permissible axial force	100 N
Connection system ➞ page 11/57	Terminal strips in the encoder Cable connection, M20 x 1.5 radial
Weight, approx.	1.3 kg
Order code	**Q92**

Manufacturer:
Leine und Linde (Germany) GmbH
Bahnhofstrasse 36
73430 Aalen, Germany
Phone: +49 (0) 73 61-78093-0
Fax: +49 (0) 73 61-78093-11
www.leinelinde.com
E-mail: info@leinelinde.de

Rotary pulse encoder HOG9 D 1024 I



Fig. 11/50 Hübner HOG9 D 1024 I

The encoder is equipped with insulated bearings.

The rotary pulse encoder HOG9 D 1024 I is available in combination with self-ventilated motors in size 112 or larger, or in combination with forced-ventilated motors in size 160 or larger.

Technical specifications

Supply voltage U_P	**+9 … +30 V**
Current consumption without load	50 … 100 mA
Permissible load current per output	60 mA, 300 mA peak
Pulses per revolution	1 024
Outputs	4 short-circuit proof square-wave pulses A, B and A', B'
Pulse offset between the two outputs	90° ± 20°
Output amplitude	$U_{High} \geq U_B$ - 3.5 V $U_{Low} \leq$ 1.5 V
Pulse duty factor	1:1 ± 20 %
Rate of change	10 V/µs (without load)
Maximum frequency	120 kHz
Maximum speed	7 000 rpm
Degree of protection	IP56
Ambient temperature range	-20 °C to +40 °C
Maximum permissible radial cantilever force	300 N
Maximum permissible axial force	200 N
Connection system ➞ page 11/57	Radial connector (mating connector is part of the scope of delivery)
Mechanical design acc. to Hübner Ident. No.	73 522 E
Weight	0.7 kg
Order code	**Q93**

Manufacturer:
Baumer Hübner GmbH
Max-Dohrn-Str. 2+4
10589 Berlin, Germany
Phone: +49 (0) 30-6 90 03-0
Fax: +49 (0) 30-6 90 03-1 04
www.baumerhuebner.com
E-mail: info@baumerhuebner.com

© Siemens AG 2017

Rugged encoders (continued)

Rotary pulse encoder HOG10 D 1024 I



Fig. 11/51 Hübner HOG10 D 1024 I

This encoder is extremely rugged and is therefore suitable for harsh operating conditions. It is equipped with insulated bearings.

The rotary pulse encoder HOG10 D 1024 I is available for motor frame size 132 and higher.

Technical specifications

Supply voltage U_P	**+9 … +30 V**
Current consumption without load	Approx. 100 mA
Permissible load current per output	60 mA, 300 mA peak
Pulses per revolution	1 024
Outputs	4 short-circuit proof square-wave pulses A, B and A', B'
Pulse offset between the two outputs	90° ± 20 %
Output amplitude	$U_{High} \geq U_B$ - 3.5 V $U_{Low} \leq$ 1.5 V
Pulse duty factor	1:1 ± 20 %
Rate of change	10 V/µs (without load)
Maximum frequency	120 kHz
Maximum speed	7 000 rpm
Degree of protection	IP66
Ambient temperature range	-20 °C to +40 °C
Maximum permissible radial cantilever force	400 N
Maximum permissible axial force	250 N
Connection system → page 11/57	Terminals, cable connection M20x1.5
Mechanical design acc. to Hübner Ident. No.	74 055 E
Weight, approx.	1.6 kg
Order code	**Q94**

Manufacturer:
Baumer Hübner GmbH
Max-Dohrn-Str. 2+4
10589 Berlin, Germany
Phone: +49 (0) 30-6 90 03-0
Fax: +49 (0) 30-6 90 03-1 04
www.baumerhuebner.com
E-mail: info@baumerhuebner.com

© Siemens AG 2017

Functionally safe rotary encoder

Information about the configuring and application of the functionally safe rotary encoder can be found in chapter "Configuring guide" on page 2/23.

Incremental encoder IN 8.5834

This incremental encoder is available for motor frame sizes 71 to 200.



Fig. 11/52 Incremental encoder IN 8.5834

Technical specifications

Incremental encoder	**IN 8.5834FS2**	**IN 8.5834FS3**
Pulses per revolution	1 024	
Supply voltage U_P	5 V_{DC} ± 5 %	
Maximum current consumption without load	≤ 70 mA	
Reverse polarity protection for supply voltage	yes	
Outputs	Sinusoidal/cosinusoidal	
• Max. frequency -3dB	400 kHz	
• Signal level	1 V_{pp} (± 10 %)	
• Outputs	Sine signal: B, B_Inv Cosine signal: A, A_Inv	
• Short-circuit strength	Yes (short-circuit proof to 0 V or output, only one channel at a time, when supply voltage is correctly applied)	
Starting torque (at 20 °C)	< 0.03 Nm	
Moment of inertia of rotor	7 x 10^{-6} kgm^2	
Max. permissible mechanical speed	≤ 3 000 rpm	
Maximum permissible angular acceleration	≤ 4 000 rad/s^2	
Vibration (10 ... 150 Hz)	200 m/s^2 (EN 60068-2-6)	
Shock resistance (11 ms)	500 m/s^2 (EN 60068-2-27)	
Degree of protection	IP65	
Ambient temperature range	-20 °C to +40 °C	
Connection system	Tangential 1 m cable with coupling socket 12-pole, M23 with 0° coding	
Weight, approx.	0.45 kg	
Certification	CE, cULus, SIL/PL	
UL file	File 224618	
CE-compliant (compliance with applicable national and regional laws, standards and regulations is also essential)	EMC Directive 2014/30/EU Machinery Directive 2006/42/EC RoHS Directive 2011/65/EU	
Safety values		
Classification	PLd / SIL2	PLe / SIL3
System structure	2-channel (Cat. 3)	2-channel (Cat. 4)
PFH d value	2.16 x 10^{-8} h^{-1} (The specified value refers to a diagnostic coverage of 90 % that must be achieved with an encoder evaluation unit. The encoder evaluation unit must at least comply with the requirements for SIL2.)	1.09 x 10^{-8} h^{-1} (The specified value refers to a diagnostic coverage of 99 % that must be achieved with an encoder evaluation unit. The encoder evaluation unit must at least comply with the requirements for SIL3.)
Service life	20 years	20 years
Relevant standards (compliance with applicable national and regional laws, standards and regulations is also essential)	EN ISO 13849-1:2008 EN ISO 13849-2:2012 EN 61800-5-2:2007	EN ISO 13849-1:2008 EN ISO 13849-2:2012 EN 61800-5-2:2007
Order code	**Q42** [1]	**Q43** [1]

[1] The functionally safe rotary encoder is not compatible with worm geared motors S.

© Siemens AG 2017

Functionally safe rotary encoder (continued)

Incremental encoder IN 8.5834

Connection assignment

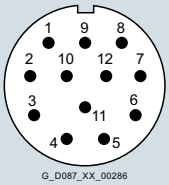

Signal

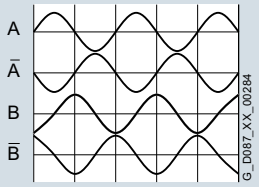

Fig. 11/53 Chart pattern with shaft rotating in clockwise direction (looking in direction of clamping ring)

	Voltage supply				Incremental signals			
Connection	U_P	Sensor U_P [1]	0 V	Sensor 0 V [1]	*A+*	*A-*	*B+*	*B-*
Flange socket	12	2	10	11	5	6	8	1

[1] Jumpers between sensor pins in rotary encoder

Manufacturer:

Fritz Kübler GmbH
Schubertstr. 47
78054 Villingen-Schwenningen, Germany

Phone: +49 (0) 77 20 - 39 03-0
Fax: +49 (0) 77 20 - 21 56 4

www.kuebler.com

E-mail: info@kuebler.com

© Siemens AG 2017

Functionally safe rotary encoder

Absolute encoder IA 8.5883

This absolute encoder is available for motor frame sizes 71 to 200.



Fig. 11/54 Absolute encoder IA 8.5883

Technical specifications

Absolute encoder	**IA 8.5883FS2**	**IA 8.5883FS3**
Supply voltage U_P	5 V_{DC} ± 5 %	
Maximum current consumption without load	≤ 80 mA	
Reverse polarity protection for supply voltage	yes	
Absolute position values	SSI	
• Output driver	RS 485 transceiver type	
• Permitted load / channel	Max. ± 20 mA	
• Signal level	HIGH type 3.8 V LOW with I load = 20 mA type 1.3 V	
• Positions per revolution	8 192 (13 bit)	
• Differentiable revolutions	4 096 (12 bit)	
• Code	Gray	
• SSI clock rate	50 kHz ... 2 MHz	
• Monoflop time	≤ 15 µs	
• Data refresh rate	ST resolution ≤ 1 µs	
SinCos signals	~ 1 V_{pp}	
• Max. frequency -3dB	400 kHz	
• Signal level	1 V_{pp} (± 10 %)	
• Short-circuit strength	Yes (short-circuit proof to 0 V or output, only one channel at a time, when supply voltage is correctly applied)	
• Pulses per revolution	2 048	
• Outputs	Sine signal: B, B_Inv Cosine signal: A, A_Inv	
Starting torque (at 20 °C)	< 0.03 Nm	
Moment of inertia of rotor	7 x 10^{-6} kgm^2	
Max. permissible mechanical speed	≤ 3 000 rpm	
Maximum permissible angular acceleration	≤ 4 000 rad/s^2	
Vibration (10 ... 150 Hz)	200 m/s^2 (EN 60068-2-6)	
Shock resistance (11 ms)	500 m/s^2 (EN 60068-2-27)	
Degree of protection	IP65	
Ambient temperature range	-20 °C to +40 °C	
Connection system	Tangential 1 m cable with coupling socket 17-pole, M23 with 0° coding	
Weight, approx.	0.45 kg	
Certification	CE, cULus, SIL/PL	
UL file	File 224618	
CE-compliant (compliance with applicable national and regional laws, standards and regulations is also essential)	EMC Directive 2014/30/EU Machinery Directive 2006/42/EC RoHS Directive 2011/65/EU	
Order code	**Q77** [1]	**Q78** [1]

[1] The functionally safe rotary encoder is not compatible with worm geared motors S.

© Siemens AG 2017

Functionally safe rotary encoder (continued)

Absolute encoder IA 8.5883

Technical specifications

Absolute encoder	IA 8.5883FS2	IA 8.5883FS3
Safety values		
Classification	PLd / SIL2	PLe / SIL3
System structure	2-channel (Cat. 3)	2-channel (Cat. 4)
PFH d value	2.16 x 10^{-8} h^{-1} (The specified value refers to a diagnostic coverage of 90 % that must be achieved with an encoder evaluation unit. The encoder evaluation unit must at least comply with the requirements for SIL2.)	1.09 x 10^{-8} h^{-1} (The specified value refers to a diagnostic coverage of 99 % that must be achieved with an encoder evaluation unit. The encoder evaluation unit must at least comply with the requirements for SIL3.)
Service life	20 years	20 years
Relevant standards (compliance with applicable national and regional laws, standards and regulations is also essential)	EN ISO 13849-1:2008 EN ISO 13849-2:2012 EN 61800-5-2:2007	EN ISO 13849-1:2008 EN ISO 13849-2:2012 EN 61800-5-2:2007
Order code	**Q77** [1]	**Q78** [1]

[1] The functionally safe rotary encoder is not compatible with worm geared motors S.

Connection assignment

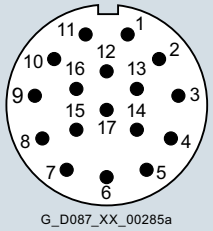

Signal

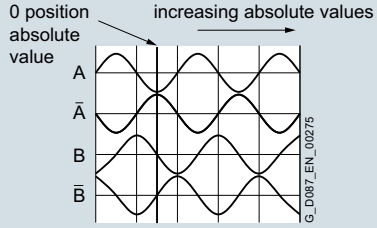

Fig. 11/55 Chart pattern with shaft rotating in clockwise direction (looking in direction of clamping ring)

	Voltage supply					Incremental signals				Absolute position values				Other signals	
Connection	U_P	Sensor U_P [1]	0 V	Sensor 0 V [1]	Inner shield [2]	A+	A-	B+	B-	DATA	$\overline{\text{DATA}}$	CLOCK	$\overline{\text{CLOCK}}$	Rot. direction	Zeros
										D+	D-	C+	C-	DIR [3]	SET [4]
Flange socket (SSI)	7	1	10	4	11	15	16	12	13	14	17	8	9	2	5

[1] Sensor pins jumpered internally in connector
[2] No inner shield
[3] When the input is activated, the absolute values are counted backwards
[4] When the input is activated, the absolute value is set to zero

Manufacturer:

Fritz Kübler GmbH
Schubertstr. 47
78054 Villingen-Schwenningen, Germany

Phone: +49 (0) 77 20 - 39 03-0
Fax: +49 (0) 77 20 - 21 56 4

www.kuebler.com

E-mail: info@kuebler.com

© Siemens AG 2017

Functionally safe rotary encoder (continued)

The maximum permissible air gaps for brake motors with functionally safe rotary encoder are different, see table.

Technical specifications of brake with functionally safe rotary encoder

Brake type	Rated braking torque T_{br} at 100 rpm	Working capacity Friction energy until the air gap is readjusted W_V	Rated air gap s_{LSN}	Max. rated air gap s_{LSM}
	Nm	MJ	mm	mm
L4/1.4	1.4	46.8	0.2	0.65
L4/2	2	46.8	0.2	0.6
L4/3	3	39.6	0.2	0.55
L4	4	36.0	0.2	0.5
L4/5	5	23.4	0.2	0.4
L8/3	3	86.4	0.2	0.6
L8/4	4	86.4	0.2	0.6
L8/5	5	75.6	0.2	0.6
L8/6.3	6.3	75.6	0.2	0.6
L8	8	64.8	0.2	0.5
L8/10	10	54	0.2	0.5
L16/4	4	108	0.2	0.6
L16/8	8	108	0.2	0.6
L16/10	10	108	0.2	0.6
L16/13	13	108	0.2	0.6
L16	16	108	0.2	0.6
L16/20	20	80	0.2	0.5
L32/8	8	190	0.3	0.7
L32/14	14	190	0.3	0.7
L32/18	18	190	0.3	0.7
L32/23	23	173	0.3	0.7
L32	32	141	0.3	0.6
L32/40	40	110	0.3	0.5
L60/25	25	204	0.3	0.7
L60/35	35	204	0.3	0.7
L60/38	38	187	0.3	0.7
L60/50	50	159	0.3	0.6
L60	60	159	0.3	0.6
L80/25	25	264	0.3	0.7
L80/35	35	264	0.3	0.7
L80/50	50	264	0.3	0.7
L80/63	63	264	0.3	0.7
L80	80	264	0.3	0.7
L80/100	100	173	0.3	0.6
L150/60	60	273	0.4	0.8
L150/80	80	273	0.4	0.8
L150/100	100	273	0.4	0.8
L150/125	125	273	0.4	0.8
L150	150	273	0.4	0.8
L260/100	100	418	0.4	0.8
L260/145	145	418	0.4	0.8
L260/180	180	418	0.4	0.8
L260/200	200	418	0.4	0.8
L260/240	240	418	0.4	0.8
L260	260	418	0.4	0.8
L260/315	315	338	0.4	0.7
L400/265	265	643	0.5	0.9
L400/300	300	643	0.5	0.9
L400/360	360	643	0.5	0.9
L400	400	643	0.5	0.9
L400/600	600	257	0.5	0.7

© Siemens AG 2017

Encoder

Mechanical protection

Design	Figure	Encoder type	Encoder order code	Connection system	Mounting of flange/coupling socket
Protection plate					
For self-ventilated motors up to frame size 90, the encoder is mounted outside the fan cover. In the standard version, the encoder is covered by a protective metal plate (painted red).	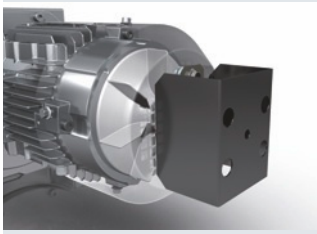	1XP8012-..	**Q50, Q51, Q52, Q53, Q54, Q55**	Flange socket	
		1XP8014-..	**Q80, Q82**		
		1XP8013-..	**Q85, Q87**		
		1XP8022-..	**Q56, Q57, Q58, Q59, Q60, Q61**	Cable terminal box	
		1XP8032-..	**Q44, Q45, Q46, Q47, Q48, Q49**	0.8 m cable + coupling socket	
		1XP8024-..	**Q79, Q81, Q83**	1 m cable + coupling socket	
		1XP8023-..	**Q86, Q88**		
Canopy					
From motor frame size 100, the encoder is protected by a canopy.		1XP8012-..	**Q50, Q51, Q52, Q53, Q54, Q55**	Flange socket	
		1XP8014-..	**Q80, Q82**		
		1XP8013-..	**Q85, Q87**		
		1XP8022-..	**Q56, Q57, Q58, Q59, Q60, Q61**	Cable terminal box	
		1XP8032-..	**Q44, Q45, Q46, Q47, Q48, Q49**	0.8 m cable + coupling socket	
		1XP8024-..	**Q79, Q81, Q83**	1 m cable + coupling socket	
		1XP8023-..	**Q86, Q88**		
		Leine und Linde LL 861 900 220	**Q92**	Cable terminal box	
		HOG9 D 1021 I	**Q93**	Flange socket	
		HOG10 D 1021 I	**Q94**	Cable terminal box	
Fan cover of the motor (with separately driven fan)					
For force-ventilated motors the encoder is mounted inside the fan cover.	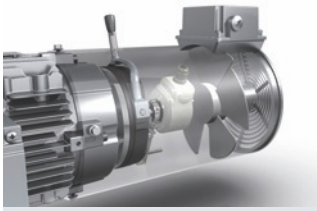	1XP8012-..	**Q50, Q51, Q52, Q53, Q54, Q55**	Flange socket (from motor frame size 132)	
		1XP8014-..	**Q80, Q82**		
		1XP8013-..	**Q85, Q87**		
		1XP8022-..	**Q56, Q57, Q58, Q59, Q60, Q61**	Cable terminal box	
		1XP8032-..	**Q44, Q45, Q46, Q47, Q48, Q49**	0.8 m cable + coupling socket	The coupling socket is attached to the motor cooling fins using a claw.
		1XP8024-..	**Q79, Q81, Q83**	1 m cable + coupling socket	The cable is freely fed out of the fan cover.
		1XP8023-..	**Q86, Q88**		
		Leine und Linde LL 861 900 220	**Q92**	Cable terminal box	
		HOG9 D 1021 I	**Q93**	Flange socket	
		HOG10 D 1021 I	**Q94**	Cable terminal box	
		IN 8.5834	**Q42, Q43**	1 m cable + coupling socket	The coupling socket is attached to the motor cooling fins using a cable tie with claw.
		IA 8.5883	**Q77, Q78**	1 m cable + coupling socket	

© Siemens AG 2017

Mechanical protection (continued)

Design	Figure	Encoder type	Encoder order code	Connection system	Mounting of flange/coupling socket
Encoder under cover					
Optionally, for motor frame sizes 71 to 200, instead of the protective metal plate, a protection cover can be ordered. This provides additional mechanical protection for the encoder. Order code Encoder under cover: **Q95**	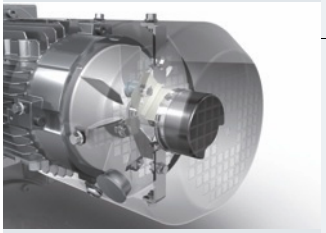	1XP8022-..	**Q56, Q57, Q58, Q59, Q60, Q61**	Cable terminal box	
		1XP8032-..	**Q44, Q45, Q46, Q47, Q48, Q49**	0.8 m cable + coupling socket	The coupling socket is attached to the cover by a bracket. 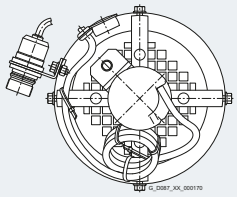
		1XP8024-..	**Q79, Q81, Q83**	1 m cable + coupling socket	The cable is brought out through a cutout with protective envelope. 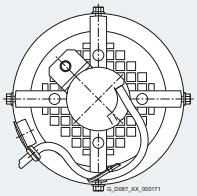
		1XP8023-..	**Q86, Q88**		
		IN 8.5834	**Q42, Q43**	1 m cable + coupling socket	The coupling socket is attached to the motor cooling fins using a cable tie with claw.
		IA 8.5883	**Q77, Q78**	1 m cable + coupling socket	

© Siemens AG 2017

Motors prepared for encoder mounting

The interface for the modular encoder-mounting shaft is designed for a total maximum weight of m = 500g. The connections and wiring for the encoder system must be selected such that the rotary encoder is not subjected to any additional forces. The encoder must be mounted in such a way that normal linear expansion does not subject the torque arm to any impermissible forces.

In the delivery state, the encoder-mounting shaft has a maximum radial runout of ≤ 0.1 mm. When the encoder is selected, it must be ensured that the minimum immersion depth of the solid shaft into the hollow shaft corresponds to the encoder manufacturer's specifications. The encoder manufacturer's instructions and recommendations must also be observed.

The interface "Prepared for encoder mounting" is always shipped with an encoder protection device for protection during transportation. The encoder protection device should be used in order to protect the mounted encoder and the mounting system against mechanical damage.

For the dimensions of the available mounting space and other dimensions, please refer to page 8/45.

This option is suitable for applications with medium shock and vibration requirements. At medium cycle frequencies of the application, speeds up to 3 600 rpm are possible.

Order code:

Prepared for encoder mounting (12 mm) [1]	**N50**

[1] Not possible for worm geared motors S

MOTION-CONNECT signal cables

MOTION-CONNECT signal cables for encoder types incremental encoder (HTL/TTL), absolute encoder (SSI/EnDat 2.1) and resolver are available for connecting Siemens 1XP8 encoders to SINAMICS S110/120 and G120.

These cables can be ordered in precise 10 cm lengths.

Description	Article No.:
Incremental encoder (HTL/TTL) 1XP8012; 1XP8032 and 1XP8022	
Pre-assembled signal cable (fixed routing/with D-sub connector on control side)	**6FX5002-2CR00-■■■■**
Pre-assembled signal cable (fixed routing/with bare wire ends on control side)	**6FX5002-2CA12-■■■■**
Pre-assembled signal cable (trailing type/ with bare wire ends on control side)	**6FX8002-2CA12-■■■■**
Absolute encoder (SSI) 1XP8014-20; 1XP8024-20; 1XP8024-21	
Pre-assembled signal cable (fixed routing)	**6FX5002-2CC06-■■■■**
Pre-assembled signal cable (trailing type)	**6FX8002-2CC06-■■■■**
Absolute encoder (EnDat 2.1) 1XP8014-10; 1XP8024-10	
Pre-assembled signal cable (fixed routing/with D-sub connector on control side)	**6FX5002-2CH00-■■■■**
Pre-assembled signal cable (trailing type/ with D-sub connector on control side)	**6FX8002-2CH00-■■■■**
Resolvers 1XP8013 and 1XP8023	
Pre-assembled signal cable (fixed routing)	**6FX5002-2CF06-■■■■**
Pre-assembled signal cable (trailing type)	**6FX8002-2CF06-■■■■**
Functionally safe rotary encoder	
Connecting cable for incremental encoders IN 8.5834FS2, IN 8.5834FS3	**6FX5002-2CG00-■■■■**
Connecting cable for absolute encoders IA 8.5883FS2, IA 8.5883FS3	**6FX5002-2CH00-■■■■**

For further selection options and information about MOTION-CONNECT signal cables, please refer to Catalog D 21.4 and the Industry Mall.

© Siemens AG 2017

Encoder accessories

Connection system

Connection system	Description	Design
M23 flange socket		
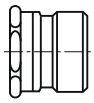	The flange socket is mounted directly on the encoder.	Pin contacts External thread
M23 coupling socket		
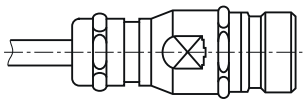	The coupling socket is connected to the encoder via a cable.	Pin contacts External thread
M23 connector		
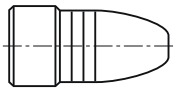	The connector is connected to the flange/ coupling socket.	Socket contacts Union nut

Technical specifications

	Cable suitable for cable carriers	Cable unsuitable for cable carriers
Approvals		
• VDE	yes	yes
• cULus or UL/CSA	yes	yes
• UL-CSA File No.	AWM STYLE 20963 80 °C 30 V E63216	E242293
Operating temperature on the surface		
• Permanently installed	-40 °C ... +80 °C	-40 °C ... +100 °C
• Moving	-10 °C ... +80 °C	-30 °C ... +100 °C
Smallest bending radius		
• Permanently installed	≥ 70 mm	≥ 35 mm
• Moving	≥ 100 mm	≥ 70 mm
Bending operations	Typically 5 x 10^6 cycles	-
Oil resistance	EN 50363-10-2	Oil-resistant
Outer jacket	Polyurethane (PUR)	Polyurethane (PUR)
Design	4x2x0,14+4x0.5 (for incremental encoder) 4x2x0,14+4x0.5+4x0.5 (for absolute encoder)	5x2x0.14 mm^2
Outer diameter	8 mm	7 mm ± 0.2 mm

© Siemens AG 2017

Encoder accessories (continued)

Connector

A straight connector for shielded cables up to 8 mm in diameter is available for encoders with flange/coupling socket.

Selection table

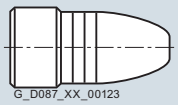

Encoder type	Order code Article No.
	M23 connector
Incremental encoders 1XP8012, 1XP8032, IN 8.5834 Resolvers 1XP8013 and 1XP8023	**Q62** FDU:55190000565002
Absolute encoders 1XP8014, 1XP8024, IA 8.5883	**Q62** FDU:55190000565003

Cable with end sleeves

A pre-assembled cable with end sleeves and three different cable lengths can be supplied for the encoders.

Selection table

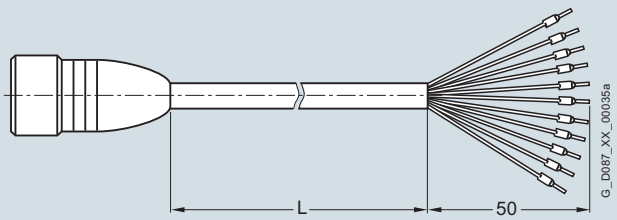

Encoder type	Suitable for cable carrier Yes/no	Order code Article No.		
Free cable length L		**2 m**	**8 m**	**15 m**
Incremental encoders 1XP8012, 1XP8032	yes	**Q69** FDU:70000004013446	**Q70** FDU:70000004013447	**Q71** FDU:70000004013448
Resolvers 1XP8013 and 1XP8023	no	**Q69** FDU:70000004013576	**Q70** FDU:70000004013577	**Q71** FDU:70000004013578
Absolute encoders 1XP8014 and 1XP8024	yes	**Q69** FDU:70000004013454	**Q70** FDU:70000004013455	**Q71** FDU:70000004013456

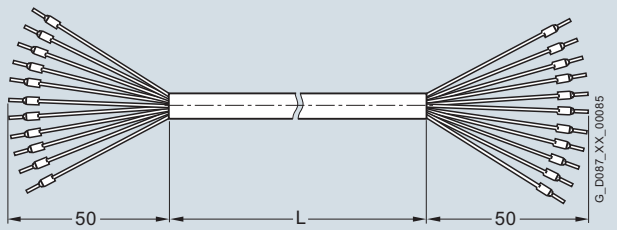

Encoder type	Suitable for cable carrier Yes/no	Order code Article No.		
Free cable length L		**2 m**	**8 m**	**15 m**
Incremental encoder 1XP8022	no	**Q63** FDU:70000004013418	**Q64** FDU:70000004013419	**Q65** FDU:70000004013420

© Siemens AG 2017

Encoder accessories (continued)

Cable with coupling socket

A cable with a straight coupling socket can be supplied for the encoders.

Selection table

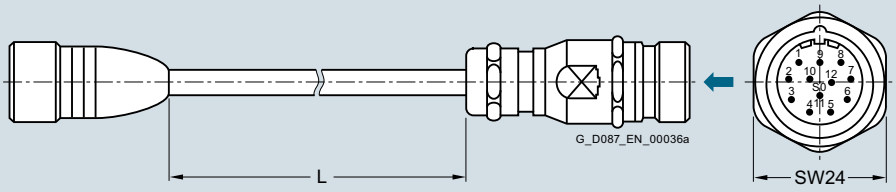

Encoder type	Suitable for cable carrier Yes/no	Order code Article No.		
Free cable length L		**2 m**	**8 m**	**15 m**
Incremental encoders 1XP8012, 1XP8032	yes	**Q72** FDU:70000004013449	**Q73** FDU:70000004013450	**Q74** FDU:70000004013451
Resolvers 1XP8013 and 1XP8023	no	**Q72** FDU:70000004013579	**Q73** FDU:70000004013580	**Q74** FDU:70000004013581

For the connection assignment, see the encoder flange socket.

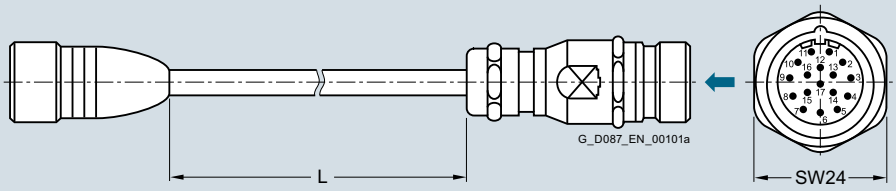

Encoder type	Suitable for cable carrier Yes/no	Order code Article No.		
Free cable length L		**2 m**	**8 m**	**15 m**
Absolute encoders 1XP8014 and 1XP8024	yes	**Q72** FDU:70000004013457	**Q73** FDU:70000004013458	**Q74** FDU:70000004013459

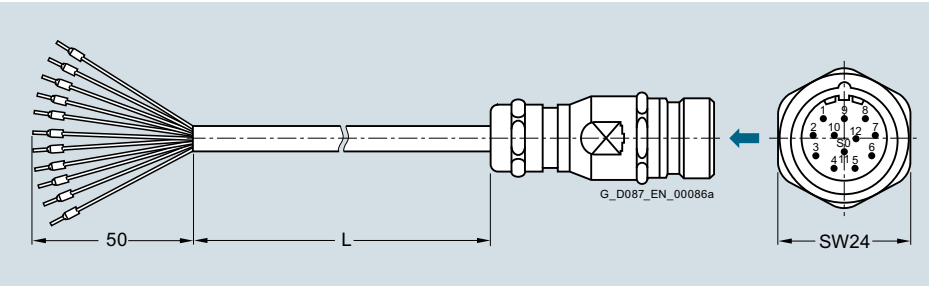

Encoder type	Suitable for cable carrier Yes/no	Order code Article No.		
Free cable length L		**2 m**	**8 m**	**15 m**
Incremental encoder 1XP8022	no	**Q66** FDU:70000004013421	**Q67** FDU:70000004013422	**Q68** FDU:70000004013443

© Siemens AG 2017

Encoder accessories (continued)

EnDAT gateways for absolute encoders

Using interface converters (gateways), EnDAT absolute encoders can be integrated in networks with a serial bus system (PROFIBUS DP, CANopen and DeviceNET).



Fig. 11/56 EnDAT gateways

Technical specifications

Gateways [1]	PROFINET	PROFIBUS DP	CANopen	DeviceNET
Supply voltage	9 ... 36 V DC	9 ... 30 V DC	9 ... 30 V DC	9 ... 30 V DC
Encoder data				
Connection	EnDat	EnDat	EnDat	EnDat
Supply voltage	5 V DC ± 5 %	5 V DC ± 5 %	5 V DC ± 5 %	5 V DC ± 5 %
Absolute encoder	1XP8014-10 (**Q82**) and 1XP8024-10 (**Q83**)			
Accessories				
Cable with coupling socket	**Q72, Q73, Q74**			
Order code	**Q01**	**Q02**	**Q03**	**Q04**

[1] Not possible for worm geared motors S

Manufacturer:
Leine und Linde (Germany) GmbH
Bahnhofstrasse 36
73430 Aalen, Germany
Phone: +49 (0) 73 61-78093-0
Fax: +49 (0) 73 61-78093-11
www.leinelinde.com
E-mail: info@leinelinde.de

Application terminal box for sensors

The application terminal box contains the connections for the sensors in the motor (temperature measurement) and on the motor (encoder). This is used to isolate the connections for the power section from those for the sensor section.

The application terminal box is available for motor frame sizes 63 to 200.

The following encoders can be used in combination with the application terminal box:

- Incremental encoder 1XP8022 (**Q56** ... **Q61**)
- Incremental encoder LL 861 900 220 (**Q92**)

Order code:

Application terminal box [1]	**Q75**

[1] Not possible for worm geared motors S

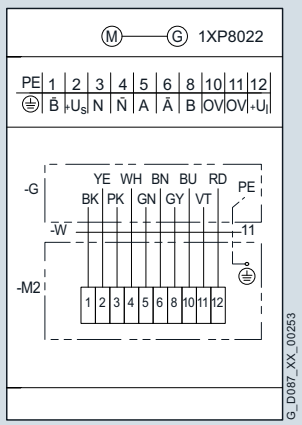

Fig. 11/57 Connection circuit diagram

© Siemens AG 2017

Encoder accessories (continued)

Modular system in combination with encoder systems

Encoder	Motor plug	Brake	Self ventilation			Forced ventilation[1)]	Backstop
			Standard fan	Metal fan	High inertia fan [1)]		
Incremental encoder							
1XP8012-..	✓	✓	✓	✓	✓	✓	✓
1XP8022-..	✓	✓	✓	✓	✓	✓	✓
1XP8032-..	✓	✓	✓	✓	✓	✓	✓
Absolute encoder							
1XP8014-..	✓	✓	✓	✓	✓	✓	✓
1XP8024-..	✓	✓	✓	✓	✓	✓	✓
Resolver							
1XP8013-..	✓	-	✓	✓	✓	✓	✓
1XP8023-..	✓	-	✓	✓	✓	✓	✓
Rugged encoders							
LL 861 900 220	✓	-	✓	✓	✓	✓	✓
HOG9 D 1024 I	✓	-	✓	✓	✓	✓	✓
HOG10 D 1024 I	✓	-	✓	✓	✓	✓	✓
Functionally safe rotary encoder							
IN 8.5834 ...	✓	✓	✓	✓	✓	✓	-
IA 8.5883...	✓	✓	✓	✓	✓	✓	-

[1)] Can be selected for motor frame size 71 or higher

© Siemens AG 2017

Backstop

Motors in frame sizes 71 to 250 can be supplied with a backstop, which prevents them from rotating in the opposite direction to that used in operation.

Above the disengage speed, in the operational direction of rotation, there is no connection between the inner and outer rings of the backstop.

For starting and stopping below the disengage speed, the operating time may be a maximum of 20 seconds.

In the direction of rotation opposite to the operational direction of rotation, there is a fixed connection between the inner and outer rings of the backstop. This allows the rated backstop torque to be transmitted.

When selecting the backstop, the direction of rotation of the geared motor output shaft must be specified.

Please note that motor speeds that are lower (e.g. in inverter operation) than the disengage speed can damage the backstop.

Order code:

Backstop [1]	**N23**

[1] Not possible for worm geared motors S

Order code, output shaft direction of rotation:

Clockwise	**K18**
Counterclockwise	**K19**

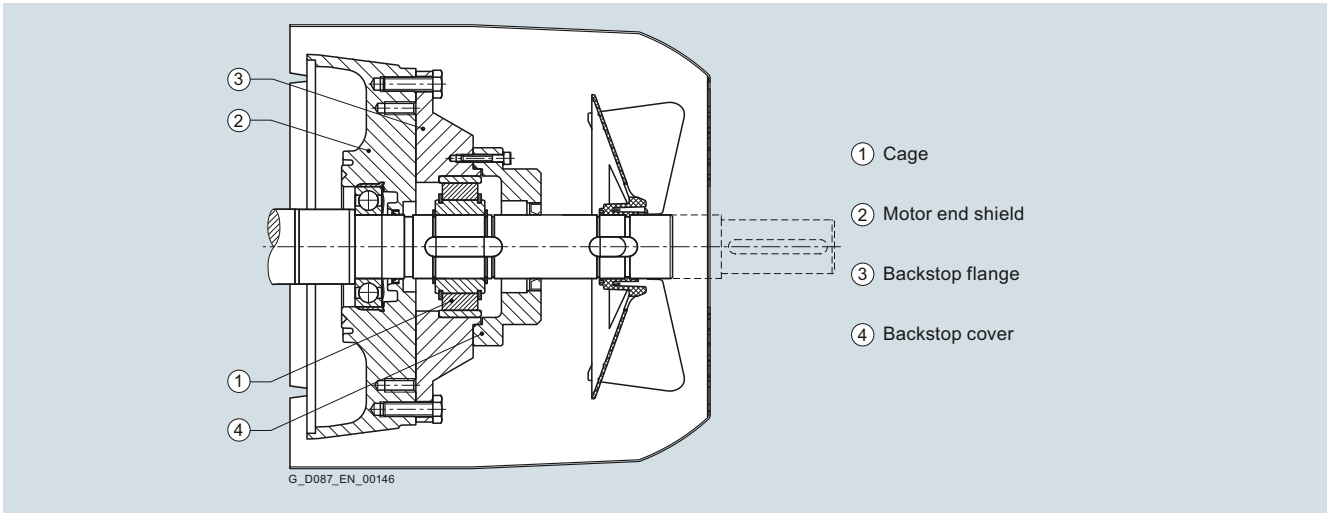

Fig. 11/58 Backstop

Technical specifications

Motor frame size	Rated torque	Disengage speed	Maximum speed	Weight	Moment of inertia of cage and inner ring
	T_{SP} Nm	n_{dis} rpm	n_{max} rpm	m_{Bstp} kg	J_{Bstp} 10^{-4} kgm^2
71	100	890	5 000	0.26	1.0
80	100	890	5 000	0.26	1.0
90	150	860	5 000	0.42	2.0
100	150	860	5 000	0.42	2.0
112	150	860	5 000	0.42	2.0
132	420	750	5 000	1.16	8.0
160	800	700	5 000	1.16	8.0
180	1 050	670	5 000	1.60	20.0
200	1 050	670	5 000	1.60	20.0
225	1 350	630	5 000	4.20	27.0
250	1 350	630	5 000	4.20	27.0

Modular system in combination with backstop

Modular system	Motor plug	Brake	Encoder	Self ventilation Forced ventilation	Second shaft extension
Backstop	✓	-	✓	✓	✓

© Siemens AG 2017

Second shaft extension and handwheel

Second shaft extension

For 4-pole motors a free, second shaft extension can be supplied on the non-drive end (NDE). The second shaft extension has a 60° centering hole to DIN 332, Part 2 with M3 to M24 tapped hole depending on the shaft diameter.

For a coupling output, the second shaft extension can transmit the full rated power. Please also inquire about the power that can be transmitted and permissible cantilever force if belt pulleys, chains, or gear pinions are used on the second shaft extension.

A second shaft extension cannot be provided if a rotary pulse encoder and/or a separately driven fan has been mounted to the motor.

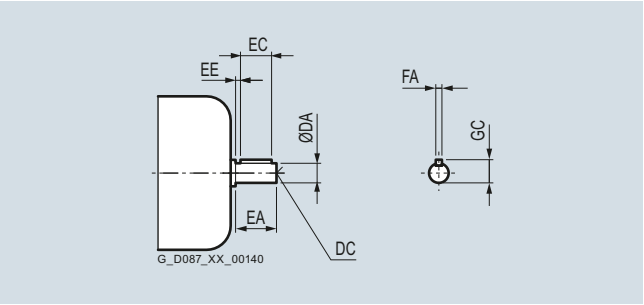

Fig. 11/59 Second motor shaft extension

Order code:

Second shaft extension [1]	**N39**

[1] Not possible for worm geared motors S

Technical specifications

Motor frame size	DA	EA	Distance between fan cover and shaft shoulder	DC	EC	EE	FA	GC
63	-	-	-	-	-	-	-	-
71	14	30	4	M5	22	4	5	16.0
80	14	30	4	M5	22	4	5	16.0
90	19	40	5	M6	32	4	6	21.5
100	19	40	5	M6	32	4	6	21.5
112	24	50	6	M8	40	5	8	27.0
132	28	60	8	M10	50	5	8	31.0
160	38	80	8	M12	70	5	10	41.0
180	42	110	15	M16	90	10	12	45.0
200	48	110	20	M16	100	5	14	51.5
225	55	110	5	M20	100	5	16	59.0
250	60	140	5	M20	125	10	18	64.0

Handwheel

Motors of frame sizes 71 to 160 can be supplied with a second shaft extension and additionally with a handwheel.

The handwheel is a disk-type handwheel in accordance with DIN 3670. By mounting it on the second shaft extension of the motor, the geared motor can be rotated even when the motor winding is in a no-voltage state.

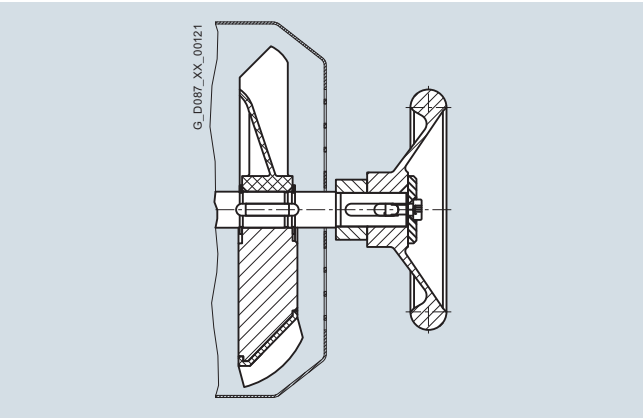

Fig. 11/60 Handwheel

Order code:

Handwheel [1]	**N40**

[1] Not possible for worm geared motors S

Modular system in combination with second shaft extension

Modular system	Motor plug	Brake	Backstop	Encoder	Self ventilation	Forced ventilation
Second shaft extension						
Without handwheel	✓	✓	✓	-	✓	-
With handwheel	✓	✓	✓	-	✓	-

© Siemens AG 2017

Hexagonal recess

All self-ventilated motors, sizes 71 to 160 with mounted brake or backstop have a hexagonal recess in the motor shaft extension at the non-drive end (NDE). As a consequence, frequently it is not necessary to mount a handwheel.

A hexagonal recess is not possible for rotary pulse encoder or second shaft extension.

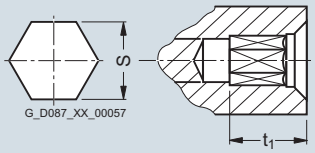

Fig. 11/61 Hexagonal recess

Width across flats for hexagonal recess

Motor frame size	Width across flats	Bore depth
	mm	mm
LA71	6	9
LE80		
LE90		
LE100		
LE112	10	12
LE132		
LE160		

Canopy

Geared motors with a vertical mounting position (motor at the top) can also be fitted with a canopy. The canopy prevents small items from falling into the geared motor; in the case of outdoors installation, its primary function is to serve as a rain canopy.

If the motor is to be used or stored in the open air, we recommend that it is kept under additional cover to protect it from prolonged exposure to direct sunlight, rain, snow, ice, or dust.

Order code:

Canopy	**N22**

© Siemens AG 2017

Condensation drain hole

Condensation can accumulate inside the motor as the result of environmental effects. This can result in corrosion and lower clearances and creepage distances.

The condensation is drained to the outside through the condensation drain hole. Depending on the mounting position, the drain holes are located at the DE and/or NDE of the motor.

Order code:

Condensation drain hole [1]	**N46**

[1] Not possible for worm geared motors S

The option "condensation drain hole" can only be used for the following applications under certain conditions:

Motor	Gearbox type						Mounting position	
	D./Z.	E.	FD./FZ.	B	K	C	Possible	Not possible
LA63, LA71	19			19			M2	M1, M3, M4, M5, M6
LA71	19 ... 79	39 ... 89	29 ... 79	19...49	39 ... 89	29 ... 89	M4	M1, M2, M3, M5, M6
LE80	89	89	89		109		M2	M1, M3, M4, M5, M6
LE90	89 ... 129	89 ... 129	89 ... 129		109 ... 149		M1, M2, M3, M5, M6	M4
LE100	89 ... 149	89 ... 149	89 ... 149		109 ... 169		M1, M2, M3, M5, M6	M4
LE112	89 ... 189	89 ... 149	89 ... 189		109 ... 189		M1, M2, M3, M5, M6	M4
LE132	129 ... 189	129 ... 149	129 ... 189		149 ... 189		M1, M2, M3, M5, M6	M4
LE160	149 ... 189	149	149 ... 189		169 ... 189		M1, M2, M3, M5, M6	M4
LES180	109 ... 189	109 ... 149	109 ... 189		129 ... 189		M1, M2, M3, M5, M6	M4
LES200	129 ... 189	129 ... 149	129 ... 189		149 ... 189		M1, M2, M3, M5, M6	M4
LES225	On request							
LES250	On request							

Internal motor corrosion protection

The outer surfaces of the geared motors have a high quality paint finish.

For special applications, it may be necessary to apply a protective coating to the inner surfaces of the motor as well.

Order code:

Internal motor corrosion protection [1]	**N41**

[1] Not possible for worm geared motors S

© Siemens AG 2017

Notes

© Siemens AG 2017



12/2 Environmental conditions
12/2 Standard ambient temperature of the geared motors
12/2 Increased protection against humidity and tropical climates
12/2 Extreme ambient temperatures

12/3 Surface treatment and preservation
12/3 Surface treatment
12/3 • Surface pretreatment
12/4 • Painting flange surfaces
12/5 • Colors
12/5 Preservation
12/5 • Long-term preservation up to 36 months

12/6 Rating plate
12/6 Overview
12/6 Rating plate for helical, parallel shaft, bevel and helical worm geared motor
12/7 Rating plate for worm geared motor
12/8 Second rating plate

12/9 Documentation
12/9 Safety instruction sheet and operating instructions
12/9 Test certificates

12/10 Fast track
12/10 Overview

© Siemens AG 2017

Standard ambient temperature of the geared motors

The SIMOGEAR geared motors can be deployed in the following standard ambient temperature ranges:

Gearbox type	Ambient temperature
Helical geared motor Z./D./E. Parallel shaft geared motor FZ./FD. Bevel geared motor K	-15 °C to +40 °C
Bevel geared motor B Helical worm geared motor C Worm geared motor S	-20 °C to +40 °C
Geared motors with SINAMICS G110M motor integrated frequency inverter	-10 °C to +40 °C

Increased protection against humidity and tropical climates

Increased protection against humidity and tropical climates can be optionally supplied for the (geared) motors, frame sizes 63 to 200. This design is suitable for air humidity in the range between 30 and 60 g water per m^3 air as a function of the temperature (see page 11/8).

The increased protection against humidity and tropical climates includes surface treatment with corrosivity category C2 (**L03**), increased winding protection against moisture and acid (**N54**) and internal motor corrosion protection (**N41**).

Please contact Siemens, if the motor requires other functions (brake, backstop, encoder systems).

Order code:

Increased protection against humidity and tropical climates	**N43**

Extreme ambient temperatures

When operating the SIMOGEAR geared motors outside the specified standard ambient temperatures, the geared motors must be adapted to the special environmental conditions. Please contact Siemens in this regard.

© Siemens AG 2017

Surface treatment

To protect the drives against corrosion and external influences, five high-quality paint systems are available in various colors.

The corrosion protection system is designed in accordance with the corrosivity categories of EN ISO 12944-2.

Geared motors, frame size 49 and higher, are painted in RAL 7016 (anthracite gray) to corrosivity category C1 as standard. This ensures that they are protected against corrosion for indoors use.

Geared motors, frame sizes 09 to 39 with an aluminum housing, are supplied unpainted as standard.

All of the unpainted parts of the products are treated with corrosion protection for 6 months.

Surface pretreatment

For especially demanding applications, the drives can also be pretreated in order to achieve a uniform paint coat thickness also at hidden locations or those difficult to access.

Order code:

Special pretreatment	**L19**

Corrosivity category	Paint system			Description	Order code
	Primer	Intermediate coat	Top coat		
Surface protection					
Aluminum gearbox housing[1]					
C1/unpainted (Standard)	-	-	-	• Indoor installation • Heated buildings with neutral atmospheres	**L00**
C1 Normal environmental stress	-	-	1-component hydro paint	• Resistant to greases, conditionally resistant to mineral oils, aliphatic solvents • Standard paint	**L02**
Cast iron gearbox housing[2]					
C1 Normal environmental stress	-	-	1-component hydro paint	• Indoor installation • Heated buildings with neutral atmospheres • Resistant to greases, conditionally resistant to mineral oils, aliphatic solvents • Standard paint	**L02**
All geared motors					
C2 Low environmental stress	2-component polyurethane	-	2-component polyurethane	• Indoor and outdoor installation • Unheated buildings with condensation, production areas with low humidity, e.g. warehouses and sports facilities • Atmospheres with little pollution, rural areas • Resistant to greases, mineral oils and sulfuric acid (10 %), caustic soda (10 %) and conditionally resistant to aliphatic solvents	**L03**
C3 Average environmental stress	2-component polyurethane	-	2-component polyurethane	• Indoor and outdoor installation • Production areas with high humidity and some air pollution, e.g. food production areas, dairies, laundries and breweries • Urban and industrial atmospheres, moderate contamination from sulfur dioxide, coastal areas with low salt levels • Resistant to greases, mineral oils, aliphatic solvents, sulfuric acid (10 %), caustic soda (10 %)	**L04**
C4 High environmental stress	2-component epoxy zinc phosphate	-	2-component polyurethane	• Indoor and outdoor installation • Chemical plants, swimming pools, wastewater treatment plants, electroplating shops, and boathouses above seawater • Industrial areas and coastal areas with moderate salt levels • Resistant to greases, mineral oils, aliphatic solvents, sulfuric acid (10 %), caustic soda (10 %)	**L20**
C5 Very high environmental stress	2-component epoxy zinc phosphate	2-component epoxy iron mica	2-component polyurethane	• Indoor and outdoor installation • Buildings/areas with almost constant condensation and high degrees of pollution, e.g. malt factories and aseptic areas • Industrial areas with high humidity and aggressive atmosphere, coastal areas and offshore environments with high salt levels • Resistant to greases, mineral oils, aliphatic solvents, sulfuric acid (10 %), caustic soda (20 %)	**L05**

1) Helical gearboxes D/Z19 to D/Z39, parallel shaft gearboxes F29 and bevel gearboxes B29 and B39
2) The bevel gearbox B49 is supplied painted

© Siemens AG 2017

Surface treatment (continued)

Corrosivity category	Paint system			Description	Order code
	Primer	Intermediate coat	Top coat		
Primer				**Ability to be painted**	
C2 G	2-component polyurethane	-	-	• 2-component polyurethane paint, 2-component epoxy paint and acid-hardening paint, 2-component acrylic paint	**L01**
C4 G	2-component epoxy zinc phosphate	-	-	• 2-component polyurethane paint, 2-component epoxy paint and acid-hardening paint, 2-component acrylic paint	**L09**
Unpainted	-	-	-	• Plastic paint, synthetic resin paint, oil paint, 2-component polyurethane paint, 2-component epoxy paint	**L00**

Painting flange surfaces

For flange-mounted or housing flange designs, the flange surface and centering are not painted at the selected output end. The versions listed in the table can be optionally selected.

Design	Figure	Possible for	Order code
	Surfaces marked blue are not painted		
Centering not painted	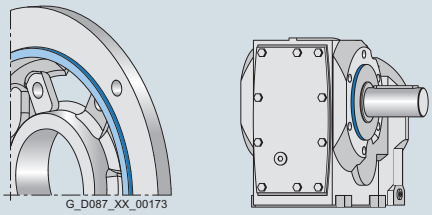 G_D087_XX_00173	• Flange-mounted design • Housing flange design	**L11**
Flange completely painted	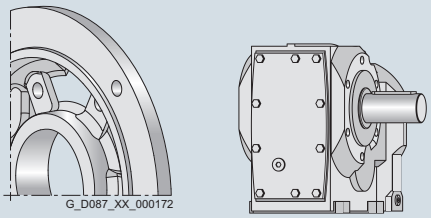 G_D087_XX_000172	• Flange-mounted design • Housing flange design	**L12**
Centering flange not painted on both sides	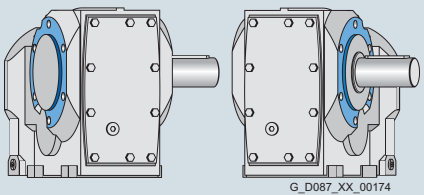 G_D087_XX_00174	• Housing flange design for bevel gearbox and helical worm gearbox	**L27**

© Siemens AG 2017

Surface treatment (continued)

Colors

In addition to anthracite gray (RAL 7016), you can select from other standard colors.

RAL color	Designation	Color, example	Order code
RAL 7016	Anthracite gray (standard)		**L75**
RAL 5015	Sky blue		**L50**
RAL 7011	Iron gray		**L51**
RAL 7030	Stone gray		**L55**
RAL 7031	Blue gray		**L53**
RAL 7035	Light gray		**L54**
RAL 7012	Basalt gray		**L83**

You can find additional colors in the DT Configurator.

Note

For light colors in corrosivity category C1 we recommend selection of surface treatment in the corrosivity category one level higher to ensure adequate and uniform coloring for the geared motor.

Preservation

All gearboxes and geared motors are preserved as standard for 6 months.

Long-term preservation up to 36 months

If the gearboxes are stored for longer than 6 months, then we recommend the "Long-term preservation" option.
A VCI corrosion inhibitor is added to the gearbox oil (volatile corrosion inhibitor).

Until commissioning, it is not permissible that the gearbox is opened, as otherwise the VCI corrosion inhibitor will vaporize. The oil level must be checked before commissioning. Corrosion protection is also applied to the flange contact surfaces and shaft extensions. We recommend that the gearbox is stored in the appropriate mounting position.

Storage conditions

Geared motors, stored in dry, dust free and evenly tempered rooms do not require any special packaging.

In all other areas, the units must be packaged in foil with desiccant and moisture indicator. If required, protection must be provided against mold and termites. The storage location must be vibration- and shock-free. The storage conditions must be regularly checked.

Order code:

Long-term preservation up to 36 months	**K17**

For information about storage and commissioning please refer to the operating instructions.

© Siemens AG 2017

Overview

The rating plates on the gearboxes and geared motors are normally manufactured out of coated aluminum foil. They are covered with a special masking film which ensures permanent resistance to UV radiation and media of all kinds (oils, greases, salt water, cleaning agents, etc.).

The adhesive and the material ensure firm adhesion and long-term legibility within the operating temperature range from -40 °C to +155 °C.

For geared motors, the rating plate is attached to a stainless steel plate on the motor.

For specific designs, additional rating plates are attached to the motor.

Rating plate for helical, parallel shaft, bevel and helical worm geared motors

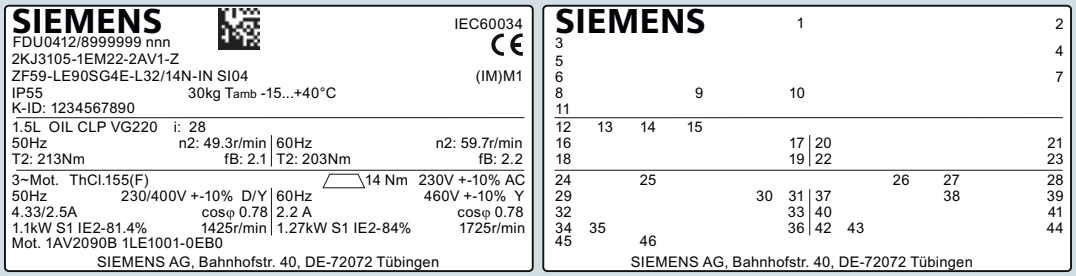

Fig. 12/1 Example, rating plate on helical geared motor

General data

1 Data matrix code
2 Applicable standard
3 Serial No.
FDU: Siemens AG, Bahnhofstr. 40, 72072 Tübingen, Germany
4 CE marking or other marking, if required
5 Article No.
6 Type designation - SI04 functional safety designation
7 Mounting position
8 Degree of protection acc. to IEC 60034-5
9 Weight *m* [kg]
10 Ambient temperature
11 Customer-specific data[1] (customer ID/free text), max. 20 characters
12 Oil quantity [l] main gearbox/intermediate gearbox
13 Oil type
14 Oil viscosity ISO VG class to DIN 51519/ISO 3448
15 Total transmission ratio *i*

Frequency 1

16 Rated frequency *f* [Hz]
17 Gearbox output speed n_2 [rpm]
18 Geared motor output torque T_2 [Nm]
19 Service factor f_B

Frequency 2

20 Rated frequency *f* [Hz]
21 Gearbox output speed n_2 [rpm]
22 Geared motor output torque T_2 [Nm]
23 Service factor f_B

Motor and brake data

24 Phase number and type of current for the motor
25 Temperature class Th.Cl.
26 Symbols (IEC 60617-2): = brake
27 Rated braking torque T_{br} [Nm]
28 Brake supply voltage *U* [V]

Frequency 1

29 Rated frequency *f* [Hz]
30 Rated voltage/range *U* [V]
31 Circuit, graphic symbols acc. to EN 60617 Part 6/IEC 60617-6
32 Rated current I_{rated} [A]
33 Power factor cos φ
34 Rated power P_{rated} [kW], duty type (if ≠ S1)
35 Efficiency class marking according to IEC 60034-30
36 Rated speed n_{rated} [rpm]

Frequency 2

37 Rated frequency *f* [Hz]
38 Rated voltage/range *U* [V]
39 Rated current I_{rated} [A]
40 Power factor cos φ
41 Circuit, graphic symbols acc. to EN 60617 Part 6/IEC 60617-6
42 Rated power P_{rated} [kW], duty type (if ≠ S1)
43 Efficiency class
44 Rated speed n_{rated} [rpm]
45 Motor series
46 Motor designation

When ordering a replacement/spare part, always specify the serial No.

[1] The customer-specific data are used to specify the customer ID/serial number. The following data are not permissible:
- Technical specifications for the geared motor (e.g. ambient temperature, voltage data, etc.)
- Details of Siemens Article No. (MLFB)
- Unlawful texts

© Siemens AG 2017

Rating plate worm geared motor S

The worm geared motors S have separate rating plates for the gearbox side and the motor side.

Rating plate on the gearbox side

The rating plate on the gearbox side particularly contains the output data of the worm geared motor S.

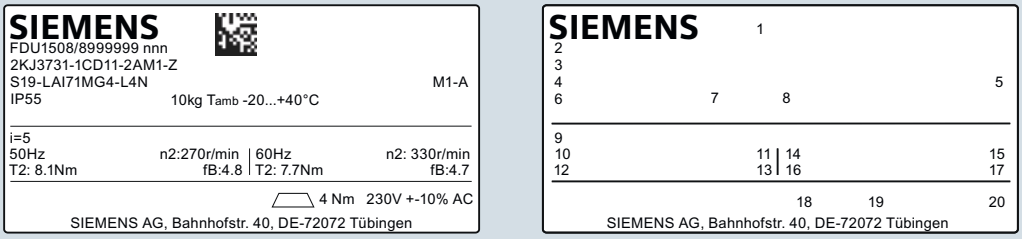

Fig. 12/2 Example of rating plate on gearbox side on worm geared motor S

General data	
1	Matrix code
2	Serial No.
3	Article No.
4	Type designation
5	Mounting position
6	Degree of protection acc. to IEC 60034-5 or IEC 60529
7	Weight m [kg]
8	Ambient temperature
9	Total transmission ratio
Frequency 1	
10	Rated frequency f [Hz]
11	Gearbox output speed n_2 [rpm]
12	Geared motor output torque T_2 [Nm]
13	Service factor f_B

When ordering a replacement/spare part, always specify the serial No.

General data	
Frequency 2	
14	Rated frequency f [Hz]
15	Gearbox output speed n_2 [rpm]
16	Geared motor output torque T_2 [Nm]
17	Service factor f_B
Motor data	
18	Symbols (IEC 60617-2): = brake
19	Rated braking torque T_{br} [Nm]
20	Brake supply voltage U [V]

Rating plate on the motor side

In addition a rating plate with the electrical data of the motor is attached to the motor on the worm geared motor S.

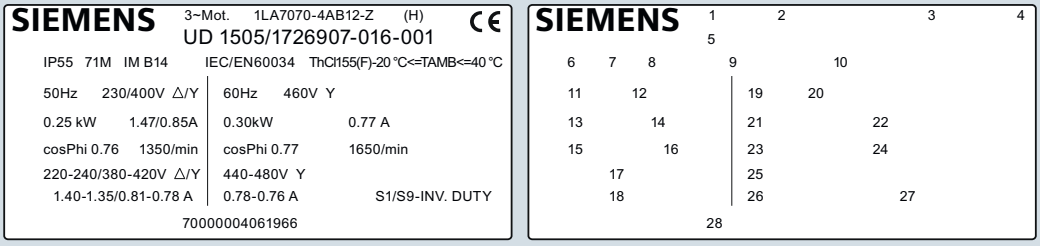

Fig. 12/3 Example of rating plate on the motor side on worm geared motor S

Motor data	
1	Number of phases
2	Type designation
3	Balancing type (H=half-key balancing)
4	CE marking or other marking, if required
5	Identification No.
6	Degree of protection acc. to IEC 60034-5 or IEC 60529
7	Frame sizes
8	Mounting position
9	Applicable standard
10	Temperature class Th.Cl. and operating temperature range
Frequency 1	
11	Rated frequency f [Hz]
12	Rated voltage [V] and circuit, graphic symbols acc. to EN 60617 Part 6 / IEC 60617-6
13	Rated power P_{rated} [kW], duty type (if ≠ S1)
14	Rated current I_{rated} [A]

Motor data	
Frequency 1	
15	Power factor cos φ
16	Rated speed n_{rated} [rpm]
17	Wide range voltage [V] and circuit
18	Current for wide range voltage [A]
Frequency 2	
19	Rated frequency f [Hz]
20	Rated voltage/range U [V]
21	Rated power P_{rated} [kW], duty type (if ≠ S1)
22	Rated current I_{rated} [A]
23	Power factor cos φ
24	Rated speed n_{rated} [rpm]
25	Wide range voltage [V] and circuit
26	Current for wide range voltage [A]
27	Duty type
28	Material number

© Siemens AG 2017

Second rating plate

Second rating plate, supplied loose

For the gearboxes and geared motors, an additional rating plate can be supplied loose.

For worm geared motors the rating plate on the gearbox side is supplied.

Order code:	
Second rating plate, supplied loose	**K41**

Second rating plate, attached

When requested, a second rating plate can be attached to the motor.

Order code:	
Second rating plate, attached [1]	**K68**

[1] Not possible for worm geared motors S



Fig. 12/4 Example, rating plate on the motor

© Siemens AG 2017

Safety instruction sheet and operating instructions

The geared motors are shipped with a multi-language safety instruction sheet for each delivery batch.

Geared motors with G110M motor integrated frequency inverter are shipped with the safety instruction sheet and the documentation for the G110M for each delivery batch.

Geared motors with a functionally safe rotary encoder are shipped with the safety instruction sheet and one set of operating instructions in German or English for each delivery batch.

One set of operating instructions is enclosed for each geared motor using the following ordering option.

Enclosed documentation	Language	Order code
1 set of operating instructions for each geared motor	German	**W21**
	English	**W22**

The operating instructions include the following documents:

- Replacement part drawings and lists
- Declaration of incorporation of partly completed machinery according to the EC Machinery Directive 2006/42/EC (gearboxes)
- EC Declaration of Conformity according to Directive 2006/95/EC (motors)

The latest versions of the operating instructions, the declaration of incorporation and the declarations of conformity are available in the Industry Online Support:
https://support.industry.siemens.com/cs/ww/en/ps/13424/man

Test certificates

On request, the following documents are available by e-mail:

Additional documentation	The following is checked:	Order code
Declaration of compliance with the order EN 10204-2.1 and factory test report EN 10204-2.2, geared motor	-	**On request**
Factory test report EN 10204-2.2 for material	-	**On request**
Acceptance test certificate EN 10204-3.1 for the motor	• 3 no-load currents of the 3 phases • Power loss for no-load operation • No-load speed	**W10**
Acceptance test certificate EN 10204-3.1 for gearboxes	• Output shaft diameter • Concentricity of the output shaft • Concentricity of the input shaft (for gearboxes with input unit A only) • Input shaft diameter (for gearboxes with input unit A only) • Noise (subjective assessment)	**W11**
Acceptance test certificate EN 10204-3.1 for paint finish	-	**W12**

© Siemens AG 2017

Overview

For a faster delivery of our SIMOGEAR geared motors outside the standard delivery times we offer a fast track option.

With this option, the SIMOGEAR geared motors can be shipped unpainted within 2 working days and painted within 4 working days.

The maximum order quantity is 5 units/order. The order must reach your Siemens sales region by 13:00 p.m. (German local time).

The following product range is available for the fast track option:

- SIMOGEAR gearbox sizes 09 to 89
- SIMOGEAR motor frame sizes 63 to 132
- Paint finish in corrosivity category C1 and C2
- Without ATEX design

Order code:	
Fast track	**W50**

© Siemens AG 2017

Appendix



13/2 **Indexes**
13/2 Index of order codes
13/7 Index of variables to dimension drives
13/11 Subject index
13/15 Index of abbreviations

13/16 **Training**
13/16 SITRAIN - Training for Industry
13/16 You benefit from practical training directly from the manufacturer
13/16 Increased profits and lower costs
13/16 Your benefits with SITRAIN – Training for Industry
13/16 Contact

13/17 **Partner at Siemens**

13/18 **Online services**
Information and ordering options on the Internet and DVD
13/18 The future of manufacturing on the Internet
13/18 Product selection using the interactive CA 01 Automation and Drives Catalog
13/18 Easy Shopping with the Industry Mall
Information and Download Center, Social Media, Mobile Media
13/19 Downloading catalogs
13/19 Social and Mobile Media

13/20 **Industry Services**
13/21 Portfolio
13/23 Online Support

13/26 **Conditions of sale and delivery**

© Siemens AG 2017

Index of order codes

Order code	Special version Designation	Detailed data Chapter/Page
Brake type		
B00 to B67	Brake types according to size and braking torque	11/25
Brake options		
C01	Enclosed brake	11/33
C02	Manual brake release lever	11/30
C03	Manual brake release lever with locking mechanism	11/30
C04	Microswitch for monitoring brake release	11/32
C06	Wear-resistant friction lining	11/34
C10	Increased corrosion protection for brake	11/33
C11	Enclosed brake with condensation drain hole	11/33
C80	Brake cable protection	11/33
Manual brake release lever position		
C26	1	11/30
C27	2	11/30
C28	3	11/30
C29	4	11/30
Brake supply voltage		
C45 ... C74	Standard voltages, brake	11/26
Function rectifier		
C59	Function rectifier with disconnection on the DC side by sensing the current	11/28
C60	Function rectifier with disconnection on the DC side by sensing the voltage	11/28
Mounting positions		
D01 ... D06	Mounting positions of the geared motors (helical and parallel shaft gearboxes)	10/4 … 10/19
D11 ... D16 and D21 ... D26	Mounting position of the geared motors (bevel, helical worm and worm gearboxes)	10/20 … 10/34
D10 and D20	Output side A or B worm gearbox	10/34
Special mounting positions		
E01 ... E17	Y axis of rotation	10/36
E21 ... E37	X axis of rotation	10/36
E41 ... E57	Z axis of rotation	10/36
Shaft-mounted version helical worm gearbox		
G09	Figure 1	10/42
G10	Figure 2	10/42
Output shaft bearings		
G20	Radially reinforced output shaft bearings	10/46
Output sealing		
G23	Seal with longer service life	10/47
G24	Seal for increased environmental stress	10/47
Oil level checking screw		
G34	Oil sight glass with reflector	10/54
Electrical oil level monitoring system		
G37	Oil level sensor	10/55
G38	Oil level sensor ATEX design	10/55
G40	Disconnector device 230 V	10/55
Gearbox venting		
G45	Pressure breather valve	10/51
G49	Pressure breather valve stainless steel	10/51
G47	Oil expansion unit	10/52 ... 10/53
Oil drain		
G53	Magnetic oil drain screw	10/54
G54	Oil drain valve, straight	10/54
G55	Oil drain valve, angled	10/54
Hollow shaft cover		
G60	Protection cover	10/46
Shrink-glued output gearwheel		
G97	Shrink-glued output gearwheel	10/56

© Siemens AG 2017

Order code	Special version Designation	Detailed data Chapter/Page
Reduced-backlash version		
G99	Reduced-backlash version	10/56
Water drain holes		
G77	Water drain holes at the output flange	10/39 ... 10/40
Output flange sealing		
G78	Output flange sealing	10/40
Flange diameter		
H01 ... H11	Flange diameter	10/38 ... 10/39
Degree of protection		
K01	IP55	11/9
K02	IP56	11/9
K03	IP65	11/9
Lubricants		
K06	CLP ISO VG220	10/48
K07	CLP ISO PG VG220	10/48
K08	CLP ISO PG VG460	10/48
K10	CLP ISO E VG220	10/48
K11	CLP ISO H1 VG460	10/48
K12	CLP ISO PAO VG220	10/48
K13	CLP ISO PAO VG68	10/48
K14	CLP ISO H1 VG100	10/48
Long-term preservation		
K17	Long-term preservation up to 36 months	12/5
Direction of rotation of the output shaft (required with backstop)		
K18	Clockwise	1/27
K19	Counterclockwise	1/27
Rating plate and additional rating plates		
K41	Second rating plate, supplied loose	12/8
K68	Second rating plate, attached	12/8
Surface treatment		
L00	Unpainted	12/3
L01	Primer according to corrosiveness category C2 G	12/4
L02	Surface protection for normal environmental stress C1	12/3
L03	Surface protection for low environmental stress C2	12/3
L04	Surface protection for average environmental stress C3	12/3
L05	Surface protection for very high environmental stress C5	12/3
L09	Primed according to corrosivity category C4 G	12/4
L11	Centering not painted	12/4
L12	Flange completely painted	12/4
L19	Special pretreatment	12/3
L20	Surface protection for high environmental stress C4	12/3
L27	Centering flange not painted on both sides	12/4
RAL colors		
L50	RAL 5015 sky blue	12/5
L51	RAL 7011 iron gray	12/5
L53	RAL 7031 blue gray	12/5
L54	RAL 7035 light gray	12/5
L55	RAL 7030 stone gray	12/5
L75	RAL 7016 anthracite gray	12/5
L83	RAL 7012 basalt gray	12/5
Insulating material class		
M08	Temperature class 180 (H)	11/8
N54	Increased air humidity/temperature with 30 to 60 g water per m^3 of air	11/8
Thermal motor protection		
M10	PTC thermistor for disconnection (PTC)	11/4
M11	PTC thermistor for warning and disconnection (PTC)	11/4
M12	Winding thermostat for disconnection (WT)	11/4

© Siemens AG 2017

Index of order codes

Order code	Special version Designation	Detailed data Chapter/Page
Thermal motor protection (continued)		
M13	Winding thermostat for warning and disconnection (WT)	11/4
M16	KTY 84-130 temperature sensor	11/5
M19	1x PT100 resistance thermometer	11/5
Fan		
M21	Metal fan	11/9
M22	High inertia fan	11/9
M23	Separately driven fan	11/10
Anti-condensation heating		
M40	115 V anti-condensation heating	11/6
M41	230 V anti-condensation heating	11/6
Terminal box position cable entry		
M45	Cable entry NPT	11/15
Terminal box cast		
M53	Terminal box cast	11/15
Terminal box position		
M55 ... M70	Location and position of the terminal box	11/11
Motor plug		
N00	HAN 10E motor plug (2 brackets)	11/16
N01	HAN 10E motor plug (2 brackets) EMC	11/16
N04	HAN 10E motor plug (1 bracket)	11/16
N06	HAN 10E motor plug (1 bracket) EMC	11/16
N08	HAN K4/4 motor plug (1 bracket)	11/17
N09	HAN K4/4 motor plug (1 bracket) EMC	11/17
N10	HAN K4/4 motor plug (2 brackets)	11/17
N11	HAN K4/4 motor plug (2 brackets) EMC	11/17
N12	HAN Q8 motor plug (1 bracket) EMC	11/19
N13	HAN Q12 motor plug (1 bracket) EMC	11/23
N18	HAN 10E counterplug	11/16
N19	HAN K4/4 counterplug	11/17
K50	HAN Q8 motor plug with 0.5 m cable (plug insert rotated by 180°)	11/21
K51 ... K55	HAN Q8 motor plug with 1 m to 5 m cable	11/21
Canopy		
N22	Canopy	11/64
Backstop on motor		
N23	Motor backstop	11/62
Second shaft extension on motor		
N39	Second shaft extension	11/63
Handwheel		
N40	Handwheel	11/63
Geared motors for use worldwide		
N30	Version in accordance with EAC	1/24
N38	Design in accordance with UL-R and CSA	1/23
N67	Design for the Chinese market	1/23
N68	Without CE marking	1/24
Designs for special environmental conditions		
N41	Internal motor corrosion protection	11/65
N43	Increased protection against humidity and tropical climates	12/2
N46	Condensation drain hole	11/65
External grounding		
N53	External grounding	11/15
Motors prepared for encoder mounting		
N50	Prepared for encoder mounting	11/56

© Siemens AG 2017

Order code	Special version Designation	Detailed data Chapter/Page
Pole number of the motor		
P00	2-pole	Chapter 8
P01	6-pole	Chapter 8
P02	8-pole	Chapter 8
Voltage tolerance		
P80	Voltage tolerance ±10 %	11/2
Duty types		
P90	Duty type S3 - 75 %	11/2
P91	Duty type S1/Inv. Duty	11/2
P92	Duty type Inv. Duty	11/2
EnDAT gateways for absolute encoders		
Q01	Gateway EnDAT PROFIBUS	11/60
Q02	Gateway EnDAT PROFIBUS DP	11/60
Q03	Gateway EnDAT CANopen	11/60
Q04	Gateway EnDAT DeviceNET	11/60
Application terminal box for sensors		
Q75	Application terminal box	11/60
Incremental encoder IN		
Q42	Functionally safe rotary encoder IN 8.5834FS2	11/49
Q43	Functionally safe rotary encoder IN 8.5834FS3	11/49
Q44	Rotary pulse encoder 1XP8032-20 (IN 1024 TTL with coupling socket)	11/42
Q45	Rotary pulse encoder 1XP8032-21 (IN 2048 TTL with coupling socket)	11/42
Q46	Rotary pulse encoder 1XP8032-22 (IN 512 TTL with coupling socket)	11/42
Q47	Rotary pulse encoder 1XP8032-10 (IN 1024 HTL with coupling socket)	11/42
Q48	Rotary pulse encoder 1XP8032-11 (IN 2048 HTL with coupling socket)	11/42
Q49	Rotary pulse encoder 1XP8032-12 (IN 512 HTL with coupling socket)	11/42
Q50	Rotary pulse encoder 1XP8012-20 (IN 1024 TTL with flange socket)	11/41
Q51	Rotary pulse encoder 1XP8012-21 (IN 2048 TTL with flange socket)	11/41
Q52	Rotary pulse encoder 1XP8012-22 (IN 512 TTL with flange socket)	11/41
Q53	Rotary pulse encoder 1XP8012-10 (IN 1024 HTL with flange socket)	11/41
Q54	Rotary pulse encoder 1XP8012-11 (IN 2048 HTL with flange socket)	11/41
Q55	Rotary pulse encoder 1XP8012-12 (IN 512 HTL with flange socket)	11/41
Q56	Rotary pulse encoder 1XP8022-20 (IN 1024 TTL with cable box)	11/43
Q57	Rotary pulse encoder 1XP8022-21 (IN 2048 TTL with cable box)	11/43
Q58	Rotary pulse encoder 1XP8022-22 (IN 512 TTL with cable box)	11/43
Q59	Rotary pulse encoder 1XP8022-10 (IN 1024 HTL with cable box)	11/43
Q60	Rotary pulse encoder 1XP8022-11 (IN 2048 HTL with cable box)	11/43
Q61	Rotary pulse encoder 1XP8022-12 (IN 512 HTL with cable box)	11/43
Modular set of cables for encoders 1XP8012, 1XP8032, 1XP8013, 1XP8023, 1XP8014 and 1XP8024		
Q62	Connector	11/58
Q69	Cable with connector and end sleeves, 2 m	11/58
Q70	Cable with connector and end sleeves, 8 m	11/58
Q71	Cable with connector and end sleeves, 15 m	11/58
Modular set of cables for encoders 1XP8012, 1XP8032, 1XP8013, 1XP8023, 1XP8014 and 1XP8024		
Q72	Cable with coupling socket, 2 m	11/59
Q73	Cable with coupling socket, 8 m	11/59
Q74	Cable with coupling socket, 15 m	11/59
Modular set of cables for encoder 1XP8022		
Q63	Cable with end sleeves, 2 m	11/58
Q64	Cable with end sleeves, 8 m	11/58
Q65	Cable with end sleeves, 15 m	11/58
Q66	Cable with coupling socket, 2 m	11/59
Q67	Cable with coupling socket, 8 m	11/59
Q68	Cable with coupling socket, 15 m	11/59

© Siemens AG 2017

Index of order codes

Order code	Special version Designation	Detailed data Chapter/Page
Absolute encoder IA		
Q77	Functionally safe rotary encoder IA 8.5883FS2	11/51
Q78	Functionally safe rotary encoder IA 8.5883FS3	11/51
Q79	Absolute encoder 1XP8024-21 (IA SSI protocol with coupling socket)	11/46
Q80	Absolute encoder 1XP8014-20 (IA SSI protocol with flange socket)	11/45
Absolute encoder IA		
Q81	Absolute encoder 1XP8024-20 (IA SSI protocol cable with coupling socket)	11/45
Q82	Absolute encoder 1XP8014-10 (IA EnDAT protocol with flange socket)	11/45
Q83	Absolute encoder 1XP8024-10 (IA EnDAT protocol cable with coupling socket)	11/45
Resolver IR		
Q85	Resolver 1XP8013-10 (IR with flange socket)	11/44
Q86	Resolver 1XP8023-11 (IR cable with coupling socket)	11/44
Q87	Resolver 1XP8013-11 (IR with flange socket)	11/44
Q88	Resolver 1XP8023-10 (IR cable with coupling socket)	11/44
Rugged encoders		
Q92	Rotary pulse encoder LL Leine und Linde	11/47
Q93	Rotary pulse encoder HOG 9	11/47
Q94	Rotary pulse encoder HOG 10	11/48
Mechanical protection		
Q95	Encoder under cover	11/55
SINAMICS G110M		
U01 ... U23	Power Module	9/3
U40	Control Unit with cable gland USS/Modus RTU	9/3
U41	Control Unit with cable gland AS-Interface	9/3
U42	Control Unit with cable gland PROFIBUS DP (DP)	9/3
U43	Control Unit with cable gland PROFINET/ EtherNet IP (PN)	9/3
U51	Control Unit, plug-in version AS-Interface	9/3
U52	Control Unit, plug-in version PROFIBUS DP (DP)	9/3
U53	Control Unit, plug-in version PROFINET/ EtherNet IP (PN)	9/3
U60	Internal braking resistor (FSA)	9/3
SINAMICS G110M		
U61	Internal braking resistor (FSB)	9/3
U70	24 V DC power supply	9/3
U71	Repair switch	9/3
Documentation		
W10	Acceptance test certificate EN 10204-3.1 for the motor	12/9
W11	Acceptance test certificate EN 10204-3.1 for gearboxes	12/9
W12	Acceptance test certificate EN 10204-3.1 for paint finish	12/9
W21	Operating Instructions (German)	12/9
W22	Operating Instructions (English)	12/9
Fast track		
W50	Fast track	12/10

© Siemens AG 2017

Overview of data to dimension drives

Code	Description	Unit
a	Gearbox constant for calculating the radial force	kNmm
α	Force application angle	°
b, d, l, y, z	Gearbox constants	mm
C	Additional factor to calculate the radial force	-
cos φ	Power factor	-
d	Diameter of the input element	mm
d_0	Average diameter of the mounted transmission element	mm
DC	Cyclic duration factor	%
η	Efficiency	%
f	Rated frequency	Hz
f_B	Service factor	-
f_{B1}	Required service factor	-
f_{br}	Braking torque correction factor	-
f_{Btot}	Service factor of the driven machine	-
f_{limit}	Limit frequency	Hz
f_{rated}	Rated motor frequency	Hz
F_{ax}	Permissible axial force	N
F_r	Radial force at the output shaft	N
F_{R2}	Permissible radial force at the center of shaft extension (l/2)	N
F_{Ravail}	Available radial force from the mounted transmission element	N
F_x	Permissible radial force from out of center force application point	N
F_{xperm1}	Permissible radial force, limited by the bearing service life, at a distance of x from the shaft shoulder	N
F_{xperm2}	Permissible radial force, limited by the shaft strength, at a distance of x from the shaft shoulder	N
i	Transmission ratio	-
I_{LR}	Starting current	A
I_{rated}	Rated current	A
J_2	Moment of inertia referred to the output speed of the gearbox	kgm²
J_{AD}	Moment of inertia of the adapter	kgm²
J_{add}	Additional moment of inertia	kgm²
J_B	Moment of inertia of the brake	kgm²
J_{Bstp}	Moment of inertia of cage and inner ring	kgm²
J_G	Moment of inertia of the gearbox reduced to the input shaft	kgm²
J_{mot}	Moment of inertia of the motor	kgm²
J_X	Moment of inertia of the load referred to the motor shaft	kgm²
J_Z	Additional moment of inertia of a high inertia fan	kgm²
k	Factor for taking into account operating conditions	-
k_{DC}	Factor for increased power	-
k_{FI}	Factor for taking into account the additional moment of inertia	-
k_{HT}	Factor for abnormal coolant temperature and installation altitude	-

Code	Description	Unit
k_M	Factor for taking into account the load torque while accelerating	-
k_P	Factor for taking into account the required power and duty cycle	-
L_{h10}	Nominal bearing service life	h
L_{na}	Modified bearing service life	h
L_{pfA}	Measuring surface sound pressure level	dB (A)
L_{rated}	Service life of the brake lining until readjustment	h
$L_{ratedmax}$	Service life of the brake lining until replacement	h
L_{WA}	Sound power level	dB (A)
m	Drive weight without any oil	kg
m_{AF}	Mass acceleration factor	-
m_{Bstp}	Weight of the backstop	kg
m_{fan}	Fan weight	kg
m_{mot}	Motor weight (without end shield at DE)	kg
n_1	Input speed of the gearbox	rpm
n_2	Output speed of the gearbox	rpm
n_{br}	Braking speed	rpm
n_{dis}	Disengage speed	rpm
n_{max}	Maximum speed	rpm
n_{rated}	Rated speed	rpm
P_1	Actual steady-state power of the motor	kW
P_{DC}	Power for the new duty cycle	kW
P_{mot}	Motor power	kW
P_{perm}	Permissible motor power	kW
P_{rated}	Rated motor power	kW
P_{req}	Required input power	kW
P_S	Actual steady-state power of the motor	kW
Q_{perm}	Permissible operating energy	J
r	Radius of the output element	m
R_{ex}	Exact number of teeth ratio	-
s_{br}	Braking distance	m
s_{Gap}	Brake air gap	mm
s_{Gapmax}	Maximum brake air gap	mm
t_1	Application time of the brake	ms
t_2	Disconnection time	ms
t_3	Slipping time	ms
t_{11}	Response time	ms
t_{12}	Rise time	ms
t_{br}	Braking time	s
t_R	Duty cycle (decimal)	-
t_s	Cycle duration	ms
T_2	Geared motor output torque	Nm
T_{2N}	Maximum output torque of the gearbox	Nm
T_{2req}	Required output torque of the driven machine	Nm

© Siemens AG 2017

Overview of data to dimension drives (continued)

Code	Description	Unit
T_A	Acceleration torque of the motor	Nm
T_{Bk}	Breakdown torque	Nm
T_{br}	Rated braking torque	Nm
T_{DC}	Torque for the new duty cycle	Nm
T_{rated}	Rated motor torque	Nm
T_{req}	Required torque	Nm
T_{SP}	Rated backstop torque	Nm
T_{St}	Relative starting torque	Nm
T_x	Reduced load torque	Nm
U	Rated voltage	V
v	Travel velocity	m/s
W	Friction energy per braking operation	J
W_{tot}	Friction energy until the brake lining is replaced	MJ
W_V	Friction energy until the brake is readjusted	MJ
x	Distance from the shaft shoulder up to the point where force is applied	mm
Z	Switching frequency	1/h
Z_A	No-load switching frequency, motor with brake	1/h
Z_0	No-load switching frequency, motor without brake	1/h
Z_{perm}	Permissible switching frequency	1/h
ϑ_{amb}	Ambient temperature	°C

© Siemens AG 2017

Important drive technology variables

SI unit Size	Symbol		Unit symbol		Designation or conversion factor *)
	SI	Previously	SI	Previously	
Length (distance)	l	L, s	m	m	1 km = 1 000 m
Area	A	F	m^2	m^2	1 m^2 = 100 dm^2
Volume	V	V	m^3	m^3	1 m^3 = 1 000 dm^3 1 dm^3 = 1 l
Plane angle	α, β, γ	α, β, γ	rad	Degrees °	1 rad = 1 m/m 1 l = π/2 rad 1° = π/180 rad
Rotation angle	ϕ	φ		Degrees °	1' = 1°/60; 1'' = 1'/60
Time					1 min = 60 s 1 h = 60 min
Time period/duration	t	t	s	s	1 d = 24 h
Frequency	f	f	Hz	1/s	1 Hz = 1/s
Speed	n	n	rpm	rpm	Rotations per minute
Velocity	v	v	m/s	m/s	1 km/h = $\frac{1}{3.6}$ m/s
Acceleration Acceleration due to gravity	a g	b g	m/s^2	m/s^2	g = 9.81 m/s^2
Angular velocity	ω	Ω	rad/s	1/s	
Angular acceleration	α	ζ	rad/s^2	$1/s^2$	
Mass	m	m	kg	kg	1
Density		d	kg/dm^3	kg/dm^3	10^3
Force Force due to weight	F G	P, K G	N	kp	9.81 1 N = 1 kg · 1 m/s^2
Pressure Mechanical tension	p σ	p σ	Pa N/m^2 N/mm^2	 kp/cm^2 kp/mm^2	1 Pa = 1 N/m^2 9.81 · 10^4 9.81
Work Energy Quantity of heat	W W Q	A E Q	 J	kpm kcal	9.81 4187 1 J = 1 Nm = 1 Ws
Torque of a force Torque Bending torque	 T	M_t M_d M_b	 Nm	 kpm	9.81 1 Nm = 1 J
Power	P	N	W	PS	735.5 1 W = 1 J/s = 1 Nm/s = $\frac{kgm^2}{s^3}$
Moment of inertia	J	θ	kgm^2	kpm^2	9.81

*) The numerical value of a variable in previously used units multiplied by the conversion rate gives the numerical value of the variable in SI units.

Conversion from kW to hp:

1 kW = 1.34102 hp

1 hp = 0.745700 kW

1 hp = 1.01387 PS

hp = horse power (US)

PS = Pferdestärke (horse power in German)

© Siemens AG 2017

Important drive technology variables (continued)

SI unit Size	Symbol		Unit symbol		Designation or conversion factor *)
	SI	Previously	SI	Previously	
Dynamic viscosity	η	η	Pa · s	P	10^{-1}
Kinematic viscosity	υ	υ	m^2/s	St	10^{-4}
Electrical current	I	I	A	A	1 A = 1 W/V = 1 V/Ω
Electrical voltage	U	U	V	V	1 V = 1 W/A
Electrical resistance	R	R	Ω	Ω	1 Ω = 1 V/A = 1/S
Electrical conductance	G	G	S	S	1 S = 1/Ω
Electrical capacitance	C	C	F	F	1 F = 1 C/V
Electric charge	Q	Q	C	C	1 C = 1 A · s
Inductance	L	L	H	H	1 H = 1 Vs/A
Magnetic flux density Induction	B	B	T	G	10^4 1 T = 1 Wb/m^2
Magnetic field strength	H	H	A/m	A/m	
Magnetic flux	ϕ	ϕ	Wb	M	10^8 1 Wb = 1 V · s
Temperature	T(ϑ)	t	K(°C)	°C	0 K = -273.15 °C

*) The numerical value of a variable in previously used units multiplied by the conversion rate gives the numerical value of the variable in SI units.

© Siemens AG 2017

Numerics

24 V DC power supply ... 9/25

A

Absolute encoder ... 11/45, 11/46, 11/51
AC voltages ... 11/26
Acceleration torque, inverter operation ... 2/26
Acceptance test certificate ... 12/9
Accessories, encoder ... 11/57
Accessories, SINAMICS G110M ... 9/27
Additional documentation ... 12/9
Additional factor C ... 2/9
Additional moments of inertia ... 2/16
Air humidity, increased ... 11/8
Ambient temperatures ... 12/2
Anti-condensation heating ... 11/6
Appendix ... Chapter 13
Application terminal box ... 11/60
Application times ... 11/36
Article No. code ... 1/7
ATEX, explosion protection ... 1/24
Available motor/inverter combinations ... 9/26
Available radial force ... 2/9
Axial forces, permissible ... 2/10

B

Backstop ... 11/62
Bearing currents ... 2/26
Bearing, reinforced ... 10/46
Benefits ... 1/4
Bevel gearbox, modular system ... 1/13
Bevel geared motors ... Chapter 5
Biodegradable oil ... 10/48
Brake
- Brake assignment ... 11/25
- Brake control ... 2/19, 11/27
- Braking energy ... 2/18
- Brake lining ... 2/18
- Brake type ... 11/25
- Brake, design ... 11/24
- Brake, enclosed ... 11/33
- Brake options ... 11/30
- Brake service life ... 2/18
- Braking distance ... 2/20
- Braking resistor ... 9/24
- Braking torques ... 2/18

Brake release, fast ... 2/19
Brake switching time ... 2/20

C

Cable entries, position ... 11/11
Cable with coupling socket ... 11/59
Cable with end sleeves ... 11/58
Canopy ... 11/64
Checklist ... 2/3
Colors ... 12/5
Commissioning tool, SINAMICS Startdrive ... 1/6, 9/28
Commissioning tool, STARTER ... 1/6, 9/28
Condensation drain hole ... 11/65
Configuring a brake ... 2/18
Configuring a gearbox ... 2/4
Configuring a three-phase motor ... 2/12
Configuring an encoder ... 2/21
Configuring sequence ... 2/2
Configuring the motor for inverter operation ... 2/25
Connecting cables and connectors for digital inputs and outputs ... 9/30
Connecting cables for the Control Unit ... 9/29
Connecting cables / plug-in connectors for power supply ... 9/30

C

Connecting the brake ... 11/26
Connection assignment
- Absolute encoder 1XP ... 11/45, 11/46
- Functionally safe rotary encoder ... 11/49, 11/51
- Incremental encoder 1XP ... 11/41,... 11/43
- HAN 10E motor plug ... 11/16
- HAN K4/4 motor plug ... 11/18
- HAN Q8 motor plug ... 11/20
- HAN Q8 motor plug with cable ... 11/22
- HAN Q12 motor plug ... 11/23
- Resolver ... 11/44

Connection circuit diagram
- 1x PT100 resistance thermometer ... 11/5
- Anti-condensation heating ... 11/6
- Application terminal box ... 11/60
- Brake ... 11/26
- HAN 10E motor plug ... 11/16
- HAN K4/4 motor plug ... 11/18
- HAN Q8 motor plug ... 11/20
- HAN Q8 motor plug with cable ... 11/22
- HAN Q12 motor plug ... 11/23
- Motor connection ... 11/12, 11/13
- Temperature sensor ... 11/4
- Temperature sensor KTY 84-130 ... 11/5
- Temperature switch ... 11/4

Connector ... 11/58
Control Units ... 9/9
Coolant temperature ... 2/16
Cooling and ventila tion ... 2/17
Corrosion protection ... 11/33
Corrosivity category ... 12/3
Cover, encoder under ... 11/55
Current sensing ... 2/19
Cyclic duration factor ... 2/20

D

DC link components ... 9/24
DC voltages ... 11/26
Declaration of compliance ... 12/9
Definition of switching times ... 2/19
Degrees of protection ... 2/17
Design types ... 1/11 ... 1/16
Designs for special environmental conditions ... 11/65
Determining the drive data ... 2/3
Determining the duty type ... 2/17
Determining the load classification ... 2/5
Determining the required service factor ... 2/5
Dimensional drawings
- Geared motors ... 3/102, 4/72, 5/73, 6/40,
- Notes ... 1/21
- Motors ... 8/36 ... 8/43
- Motors with SINAMICS G110M ... 9/32

Dimensions of the manual brake release lever ... 11/31
Direction of rotation ... 1/27
Disconnection on the AC side ... 2/19
Disconnection on the DC side using current sensing ... 2/19
Disconnection on the DC side using voltage sensing ... 2/19
Disconnection times ... 11/36
Disconnector device 230 V ... 10/55
Documentation ... 12/9
Drive Technology Configurator (DT Configurator) ... 1/6
Duty cycle, function rectifier ... 11/28
Duty types ... 11/2
DURIGNIT IR 2000, insulation ... 11/8

© Siemens AG 2017

Subject index

E
Economic area ... 1/22
Efficiency classes ... 1/25
Efficiency of gearbox ... 2/4
Efficiency optimization ... 2/4
Efficiency, brake ... 11/24
Efficiency, motor ... 8/5
Electrical design ... 11/2
Electrical oil level monitoring system ... 10/55
EMC measures ... 8/5
Enclosed brake ... 11/33
Encoder ... 11/40
- Absolute encoder ... 11/45, 11/46
- Functionally safe rotary encoder ... 11/49 ... 11/53
- Incremental encoder ... 11/41 ... 11/43
- Resolver ... 11/44
- Rugged encoders ... 11/47, 11/48

Encoder accessories ... 11/57
Encoder under cover ... 11/55
EnDAT, gateway ... 11/60
Energy efficiency ... 1/25
Environmental conditions ... 11/65. 12/2
Explosion protection as per ATEX ... 1/24
Export, without CE marking ... 1/24
External grounding ... 11/15
Extreme ambient temperatures ... 12/2

F
Factory test report ... 12/9
Fan ... 11/9, 11/10
Fast brake application ... 2/19
Fast brake release ... 2/19
Fast track ... 12/10
Flange diameter ... 10/38
Flange surfaces, painting ... 12/4
Flange-mounted designs ... 10/38
- Dimensional drawings
  - Bevel geared motors ... 5/73
  - Helical geared motors ... 3/102
  - Helical worm geared motors ... 6/40
  - Parallel shaft geared motors ... 4/72
  - Worm geared motors ... 7/9

Foot-mounted design ... 10/37
Foot/flange-mounted design ... 10/37
- Dimensional drawings
  - Helical geared motors ... 3/102

Forced ventilation ... 11/10
Frequencies ... 11/2
Friction lining, wear resistant ... 11/34
Function circuit diagram, brake ... 11/28
Function rectifier ... 11/28
Functionally safe rotary encoder ... 2/23, 11/49 ... 11/53
Fuses and circuit breakers ... 9/23

G
Gateway EnDAT ... 11/60
Gearbox constants ... 2/10
Gearbox fastening ... 2/8
Gearbox lubricating oils ... 10/48
Gearbox options ... Chapter 10
Gearbox, type designation ... 1/9
Geared motors ... 1/2
Geared motors for use worldwide ... 1/22
General options ... Chapter 12
General technical specifications ... 1/22
Grease service life ... 2/26
Grounding, external ... 11/15
Guidelines for selection and ordering ... 1/7

H
Half-wave rectifier ... 11/26
HAN 10E, motor plug ... 11/16
HAN K4/4, motor plug ... 11/17
HAN Q8, motor plug ... 11/19
HAN Q8 with cable, motor plug ... 11/21
HAN Q12, motor plug ... 11/23
Handwheel ... 11/63
Helical geared motors ... Chapter 3
Helical worm geared motors ... Chapter 6
Hexagonal recess ... 11/64
High Efficiency ... 1/25
High inertia fan ... 11/9
High-speed excitation ... 2/19
Hollow shaft ... 10/43 ... 10/44
Hollow shaft cover ... 10/46
Hollow shaft with shrink disk ... 10/43 ... 10/44
Hollow shaft, inches ... 10/43 ... 10/44
Housing flange ... 10/37

I
Increased air humidity/temperature ... 11/8
Increased corrosion protection (brake) ... 11/33
Increased protection against humidity and tropical climates ... 12/2
Incremental encoder ... 11/41 ... 11/43
Input speed ... 2/6
Installation altitude ... 2/16
Installation kits ... 9/28
Insulation ... 11/7
Insulation DURIGNIT IR 2000 ... 11/8
Intelligent Operator Panel IOP ... 9/27
Internal corrosion protection, motor ... 11/65
Internal motor corrosion protection ... 11/65
International Efficiency, general information ... 1/25
Inverter operation, configuring ... 2/25
IP55, IP56, IP65 ... 11/9

K
KTY 84-130, temperature sensor ... 11/5

L
Line feeder cables ... 2/16
Line-side components ... 9/24
Load classification of driven machines ... 2/5
Load classification, determining ... 2/5
Location and position of the terminal box ... 11/11
Long-term preservation up to 36 months ... 12/5
Lubrication ... 10/47

M
Magnetic oil drain screw ... 10/54
Manual brake release ... 11/30
Manual brake release lever ... 11/30
Manual brake release lever with locking mechanism ... 11/30
Manual brake release lever, dimensions ... 11/31
Manual brake release lever, position ... 11/30
Mass acceleration factor ... 2/6
Mating connectors ... 11/16, 11/17
Mechanical design ... 11/9
Mechanical protection ... 11/54
Mechanical stress ... 2/26
Memory card ... 9/28
Metal fan ... 11/9
Microswitch for monitoring brake release ... 11/32
Minimum efficiencies according to IEC 60034-30-1:2014 ... 1/25
Modular MODULOG principle ... 8/2

© Siemens AG 2017

M

Modular system
- Bevel geared motors B ... 1/13
- Bevel geared motors K ... 1/14
- Combination with backstop ... 11/62
- Combination with brake ... 11/34
- Combination with encoder systems ... 11/61
- Combination with second shaft extension ... 11/63
- Helical geared motors ... 1/11
- Helical worm geared motors ... 1/15
- Parallel shaft geared motors ... 1/12
- Worm geared motors ... 1/16

Moments of inertia, additional ... 2/16
MOTION-CONNECT signal cables ... 11/56
Motor connection and terminal box ... 11/11
Motor connection D/Y ... 11/12
Motor connection Y ... 11/13
Motor connection YY/Y ... 11/13
Motor data, rating plate ... 12/6, 12/7
Motor options ... Chapter 11
Motor plug
- HAN 10E ... 11/16
- HAN K4/4 ... 11/17
- HAN Q8 ... 11/19
- HAN Q8 with cable ... 11/21
- HAN Q12 ... 11/23

Motor power tables, structure ... 1/19
Motor protection ... 11/4
Motors ... Chapter 8
Motors for the Chinese market ... 1/23
Motors for the Eurasian market ... 1/24
Motors for the North American market ... 1/23
Motors prepared for encoder mounting ... 11/56
Motors, type designation ... 1/10
Mounting ... 10/37
Mounting positions ... 10/2
- Bevel geared motors ... 10/20
- Helical geared motors ... 10/4
- Helical worm geared motors ... 10/28
- Parallel shaft geared motors ... 10/13
- Special mounting positions ... 10/36
- Tandem geared motors ... 10/35
- Worm geared motors ... 10/34

Mounting types ... 10/37

N

Noise ... 1/27
Noise behavior ... 1/27
Notes on dimensional drawings ... 1/21
Notes on selection tables ... 1/17

O

Oil drain ... 10/54
Oil drain valve ... 10/54
Oil expansion unit ... 10/52
Oil level checking screw ... 10/54
Oil level control ... 10/54
Oil level monitoring system, electrical ... 10/55
Oil level sensor ... 10/55
Oil quantity ... 10/47
Oil sight glass with reflector ... 10/54
Oil valves ... 10/3
Operating energy, permissible ... 11/35
Operating instructions ... 12/9
Operation of geared motors on a frequency inverter ... 2/25
Options, geared motors ... Chapter 10
Options, general ... Chapter 12
Options, motors ... Chapter 11
Ordering data ... 1/7
Ordering example ... 1/8

O

Output flange sealing ... 10/40
Output flange, water drain holes ... 10/39
Output shaft bearings ... 10/46

P

Paint system ... 12/3
Painting flange surfaces ... 12/4
Parallel shaft geared motors ... Chapter 4
Partial loads ... 8/5
PC inverter connection kit ... 9/28
Peak load ... 2/26
Permissible axial forces ... 2/9
Permissible operating energy ... 11/35
Permissible radial force ... 2/9
Permissible torque for SIMOLOC assembly system ... 2/11
Permissible voltage stress ... 2/26
Photoelectric scanning, principle of operation ... 2/22
Position of the terminal box ... 11/11
Power bus distribution ... 9/31
Power factor ... 8/5
Power Module ... 9/17
Power table, structure ... 1/17
Premium Efficiency ... 1/25
Prepared for encoder mounting ... 11/56
Preservation ... 12/5
Pressure breather valve ... 10/51
Pretreatment, special ... 12/3
Primed according to corrosivity category ... 12/3
Protection against humidity and tropical climates, increased ... 12/2
Protection against tropical climates, increased ... 12/2
Protection cover ... 10/46
Protection, mechanical ... 11/54
Protective devices, current-dependent ... 2/16
Protective devices, temperature-dependent ... 2/16
PTC thermistor for disconnection ... 11/4
PTC thermistor for warning and disconnection ... 11/4

R

Radial force, available ... 2/9
Radial force, permissible ... 2/9
Radially reinforced output shaft bearings ... 10/46
RAL color ... 12/5
Rating plate ... 12/6
Rating plate, second ... 12/8
Rectifier ... 2/19, 11/26
Rectifier bridge ... 11/26
Rectifier with overexcitation ... 2/19
Reduced-backlash version ... 10/56
Reduced-noise rotor-hub connection ... 11/34
Reinforced bearings ... 10/46
Repair switch ... 9/23
Required torque ... 2/6
Resolver ... 11/44
Roller bearing grease ... 10/47
Rotary pulse encoder ... 11/47, 11/48
Rotor-hub connection ... 11/34
Rugged encoders ... 11/47

S

Safety data sheet ... 12/9
Safety Integrated functions ... 9/9
Seal for increased environmental stress ... 10/47
Seal with longer service life ... 10/47
Sealing ... 10/47
Sealing system ... 10/47
Second rating plate ... 12/8
Second shaft extension ... 11/63
Selecting the brake ... 11/25

© Siemens AG 2017

Subject index

S

Selection data, cable entry ... 11/11
Self ventilation ... 11/9
Self-locking with worm gearbox ... 2/4
Separately driven fan ... 11/10
Service factor ... 2/5
Service life of the brake lining ... 2/18
Shaft designs ... 10/43 ... 10/44
Shaft extension, second ... 11/63
Shaft load ... 2/9
Shaft-mounted design ... 10/40 ... 10/42
- Dimensional drawings
  - Bevel geared motors ... 5/73
  - Helical worm geared motors ... 6/40
  - Parallel shaft geared motors ... 4/72
  - Worm geared motors ... 7/9

Shrink-glued output gearwheel ... 10/56
SIMOGEAR geared motors ... 1/2
SIMOLOC assembly system ... 4/120, 5/132, 6/63, 10/45
SINAMICS G110M ... Chapter 9
SINAMICS G110M design ... 9/6
SINAMICS Startdrive, commissioning tool ... 1/6
Single-disk spring-operated brake ... 11/24
SIZER for Siemens Drives ... 1/6
Splashing losses ... 2/4
Solid shaft ... 10/43 ... 10/44
Solid shaft, both ends ... 10/43 ... 10/44
Solid shaft, inches ... 10/43 ... 10/44
Sound power level ... 1/27
Spare Parts Kit ... 9/31
Special colors ... 12/5
Special mounting positions ... 10/36
Special order versions ... 1/7
Special pretreatment ... 12/3
Special version ... 10/56
Specifications ... 1/22
Splined hollow shaft ... 10/43 ... 10/44
Spring-operated disk brakes ... 2/18, 11/24
Standard ambient temperature ... 12/2
Standard corrosion protection ... 11/33
Standard Efficiency ... 1/25
Standard fan ... 11/9
Standard voltages ... 11/2
Standards ... 2/4, 8/4
STARTER, commissioning tool ... 1/6
Storage conditions ... 12/5
Stress, mechanical ... 2/26
Structure of the Article No. ... 1/7
Structure of the tables ... 1/17 ... 1/20
Super Premium Efficiency ... 1/25
Supplementary system components for SINAMICS G110M ... 9/27
Supply voltages ... 11/26
Surface pretreatment ... 12/3
Surface treatment ... 12/3
Switching frequency ... 2/15

T

Tandem gearboxes ... 2/7, 3/90, 3/163, 4/61, 4/118, 5/63, 5/131, 6/25, 6/62, 10/35
Technical specifications
- Absolute encoder 1XP8024-21 ... 11/46
- Absolute encoder IA 8.5883FS2 and IA 8.5883FS3 ... 11/51
- Absolute encoders 1XP8014 and 1XP8024 ... 11/45
- Anti-condensation heating ... 11/6
- Backstop ... 11/62
- Brake ... 11/35
- Forced ventilation ... 11/10
- General ... 1/22
- HAN 10E motor plug ... 11/17
- HAN K4/4 motor plug ... 11/18
- HAN Q8 motor plug ... 11/19
- HAN Q8 motor plug with cable ... 11/21
- HAN Q12 motor plug ... 11/23
- Incremental encoder 1XP8012 ... 11/41
- Incremental encoder 1XP8022 ... 11/43
- Incremental encoder 1XP8032 ... 11/42
- Incremental encoder IN 8.5834FS2 and IN 8.5834FS3 ... 11/49
- Motors, overview ... 8/3
- Resolver ... 11/44
- Rugged encoders HOG9 D 1024 I ... 11/47
- Rugged encoders HOG10 D 1024 I ... 11/48
- Rugged encoders LL 861 900 220 ... 11/47
- Second shaft extension ... 11/63

Temperature class ... 11/8
Temperature sensor ... 11/4
Temperature sensor KTY 84-130 ... 11/5
Temperature switch ... 11/4
Temperature-dependent protective devices ... 2/16
Terminal box ... 11/11
Terminal box assignment ... 11/12
Terminal box cast ... 11/15
Terminal box material ... 11/13
Terminal box type ... 11/14
Test certificates ... 12/9
Thermistor (PTC) ... 11/4
Tolerances ... 8/4
Torque arm ... 10/40 ... 10/42
- Dimensional drawings
  - Helical geared motors ... 3/102
  - Helical worm geared motors ... 6/40
  - Parallel shaft geared motors ... 4/72
  - Worm geared motors ... 7/9

Torque table, structure ... 1/18
Torque, required ... 2/6
Type designations
- Gearbox ... 1/9
- Motors ... 1/10
- SINAMICS G110M ... 9/2

U

Undervoltage ... 2/16
Unpainted ... 12/3

V

Ventilation ... 2/17
Venting ... 10/51
Voltage sensing ... 2/19
Voltage stress, permissible ... 2/26
Voltages ... 11/2

W

Wear-resistant friction lining ... 11/34
Weight, geared motor ... 3/3, 4/3, 5/3, 6/3, 7/2
Weight, motor ... 8/6 ... 8/34
Winding ... 11/8
Winding thermostat ... 11/4
Working capacity ... 11/37
Worm geared motors ... Chapter 7

© Siemens AG 2017

Abbreviation	Meaning
AC	Alternating Current, three-phase
ATEX	Atmosphère explosible
CAD	Computer-Aided Design
CCC	China Compulsory Certification
CEL	China Energy Label
CEMEP	Comité Européen de Constructeurs de Machines Électriques et d'Électronique de Puissance (European sector committee of manufacturers of electrical machines)
CONT	Continuous duty
CQC	China Quality Certification Center
CSA	Canadian Standards Association
CT	Coolant temperature
DC	Direct Current
DC	Duty cycle
DE	Drive end
DIN	German Institute for Standardization (Deutsches Institut für Normen e. V. -DIN)
EAC	Eurasian conformity
EBPG	Energy-related products directive
EC	European Community
ECL	Energy Conservation Law of PRC
EER	Energy Efficiency Regulations
EFF	Efficiency
EGE	Europäische Größeneinheit
EISA	Energy Independence and Security Act
EMC	Electromagnetic compatibility
EN	European standard
EPAct	Energy Policy Act
EU	European Union
EuP	Energy Using Products
FVA	Research Association for Drive Technology (Forschungsvereinigung Antriebstechnik e. V.)
HF	High frequency
HTL	High Transistor Logic
IDS	Integrated Drive Systems
IE	International Efficiency
IEC	International Electrotechnical Commission
IP	International Protection
ISO	International Organization for Standardization

Abbreviation	Meaning
MODULOG	Modular logistically optimized design (motor)
NDE	Non-drive end
NN	Sea level
NAT	Rated response temperature
NEE	NEMA Energy Efficient
NPT	National Pipe Thread
PAO	Polyalphaolefine
PE	Protective Earth, grounding
PG	Polyglycol
PTC	Positive Temperature Coefficient
SA	Site altitude (installation altitude)
SSI	Simple Sensor Interface
SW	Width across flats
TIA	Totally Integrated Automation
TIP	Totally Integrated Power
TTL	Transistor Transistor Logic
UL-R	Underwriters Laboratories Inc. - Recognition Mark
VDE	Association of Electrical Engineering, Electronics and Information Technology (Verband der Elektrotechnik Elektronik Informationstechnik e. V.)
VDI	Association of German Engineers (Verein Deutscher Ingenieure)
WGK	Class, signifying risk of water pollution

© Siemens AG 2017



Your benefit from practical training directly from the manufacturer

SITRAIN – Training for Industry – provides you with comprehensive support in solving your tasks.

Training directly from the manufacturer enables you to make correct decisions with confidence.

Increased profits and lower costs:

- Shorter times for commissioning, maintenance and servicing
- Optimized production operations
- Reliable configuration and startup
- Shorten commissioning times, reduce downtimes, and faster troubleshooting
- Exclude expensive faulty planning right from the start.
- Flexible plant adaptation to market requirements
- Compliance with quality standards in production
- Increased employee satisfaction and motivation
- Shorter familiarization times following changes in technology and staff

Contact

Visit our site on the Internet at:
www.siemens.com/sitrain

or let us advise you personally. You can request our latest training catalog from:

SITRAIN – Training for Industry
SITRAIN Customer Support Germany:

Tel.: +49 911 895-7575
Fax: +49 911 895-7576

Email: info@sitrain.com

Your benefits with SITRAIN – Training for Industry

Certified top trainers

Our trainers are skilled specialists with practical experience. Course developers have close contact with product development, and pass on their knowledge to the trainers and then to you.

Practical application with practice

Practice, practice, practice! We have designed the trainings with an emphasis on practical exercises. They take up to half of the course time in our trainings. You can therefore implement your new knowledge in practice even faster.

300 courses in more than 60 countries

We offer a total of about 300 classroom-based courses. You can find us at more than 50 locations in Germany, and in 62 countries worldwide. You can find which course is offered at which location at:
www.siemens.com/sitrain

Skills development

Do you want to develop skills and fill in gaps in your knowledge? Our solution: We will provide a program tailored exactly to your personal requirements. After an individual requirements analysis, we will train you in our training centers near you or directly at your offices. You will practice on the most modern training equipment with special exercise units. The individual training courses are optimally matched to each other and help with the continuous development of knowledge and skills. After finishing a training module, the follow-up measures make success certain, as well as the refreshment and deepening of the knowledge gained.

© Siemens AG 2017

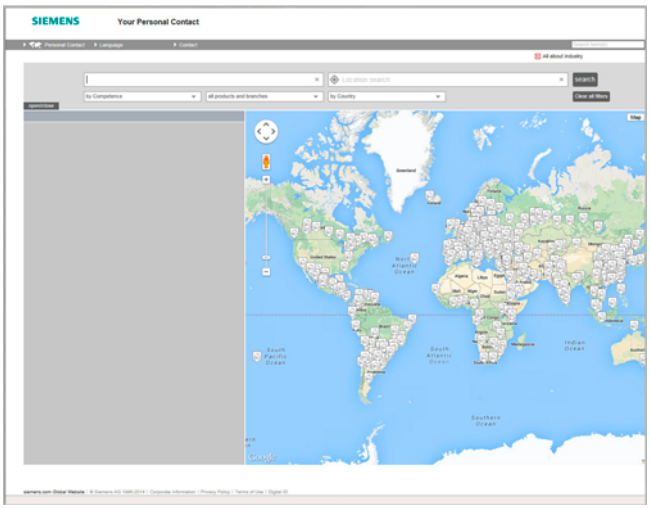

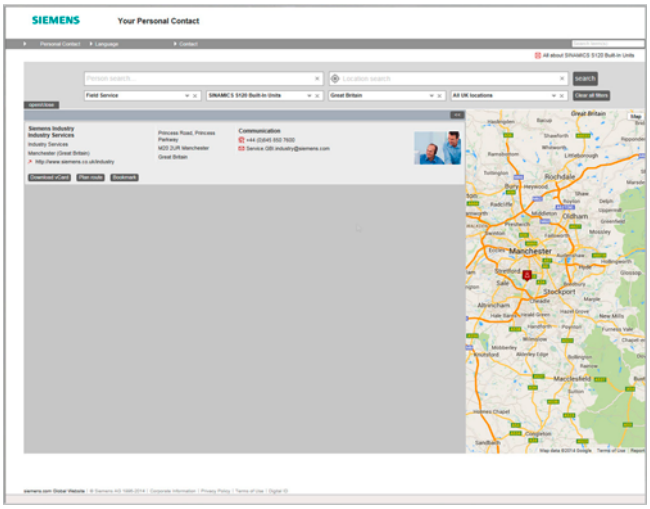

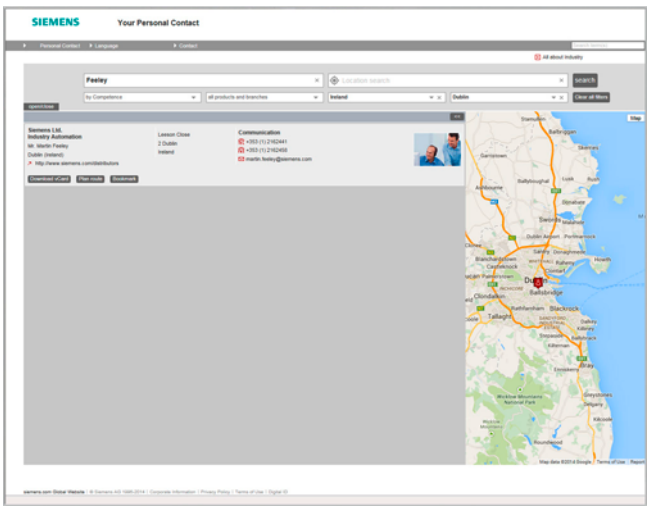

At Siemens we are resolutely pursuing the same goal: long-term improvement of your competitive ability.
We are committed to this goal. Thanks to our commitment, we continue to set new standards in automation and drive technology. In all industries – worldwide.

At your service locally, around the globe for consulting, sales, training, service, support, spare parts ... on the entire Digital Factory and Process Industries and Drives.

Your personal contact can be found in our Contacts Database at:
www.siemens.com/automation-contact

You start by selecting

- the required competence,
- products and branches,
- a country,
- a city

or by a

- location search or

person search.

© Siemens AG 2017

Information and Ordering Options on the Internet and DVD

The Future of Manufacturing on the Internet



Detailed knowledge of the range of products and services available is essential when planning and engineering automation systems. It goes without saying that this information must always be as up-to-date as possible.

Industry is on the threshold of the fourth industrial revolution as digitization now follows after the automation of production. The goals are to increase productivity and efficiency, speed, and quality. In this way, companies can remain competitive on the path to the future of industry.

You will find everything you need to know about products, systems and services on the internet at:

www.siemens.com/industry

Product Selection Using the Interactive CA 01 Automation and Drives Catalog

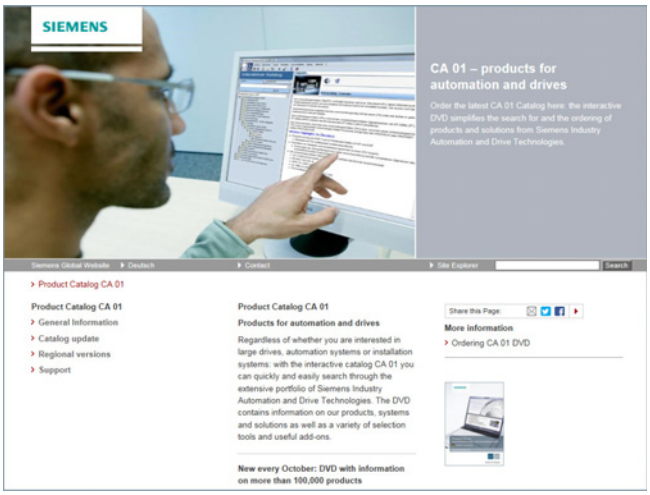

Detailed information together with user-friendly interactive functions:
The CA 01 interactive catalog covers more than 100,000 products, thus providing a comprehensive overview of the product range provided by Siemens.

You will find everything you need here for solving tasks in the fields of automation, switching, installation and drives.
All information is provided over a user interface that is both user-friendly and intuitive.

You can order the CA 01 product catalog from your Siemens sales contact or in the Information and Download Center:

www.siemens.com/industry/infocenter

Information about the CA 01 interactive catalog can be found on the Internet at:

www.siemens.com/automation/ca01

or on DVD.

Easy Shopping with the Industry Mall

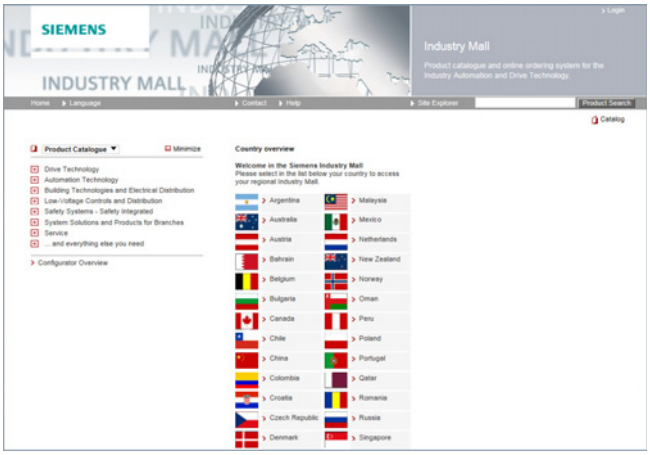

The Industry Mall is the electronic ordering platform of Siemens AG on the Internet. Here you have online access to a huge range of products presented in an informative and attractive way.

Data transfer via EDIFACT allows the whole procedure, from selection through ordering to tracking and tracing, to be carried out online. Availability checks, customer-specific discounts and bid creation are also possible.

Numerous additional functions are provided for your support. For example, powerful search functions make it easy to select the required products. Configurators enable you to configure complex product and system components quickly and easily. CAx data types are also provided here.

You can find the Industry Mall on the Internet at:

www.siemens.com/industrymall

© Siemens AG 2017

Downloading Catalogs

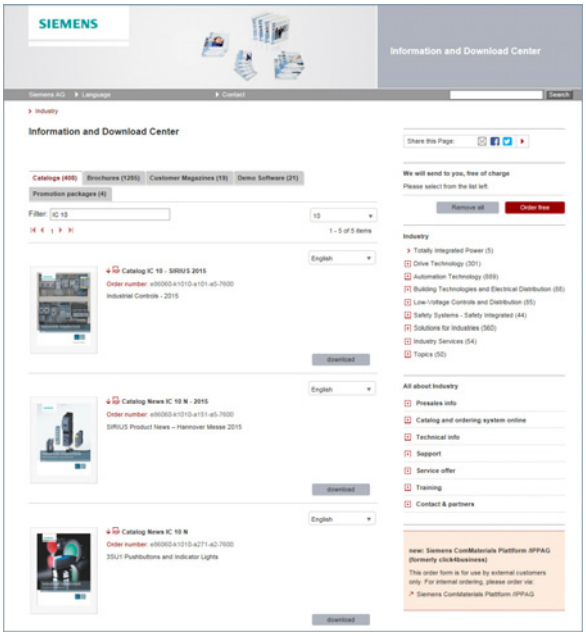

In addition to numerous other useful documents, you can also find the catalogs listed on the back inside cover of this catalog in the Information and Download Center. You can download these catalogs in PDF format without having to register.

The filter dialog above the first catalog displayed makes it possible to carry out targeted searches. If you enter "MD 3" for example, you will find both the MD 30.1 and MD 31.1 catalogs. If you enter "IC 10", both the IC 10 catalog and the associated news or add-ons are displayed.

Visit us at:

www.siemens.com/industry/infocenter

Social and Mobile Media

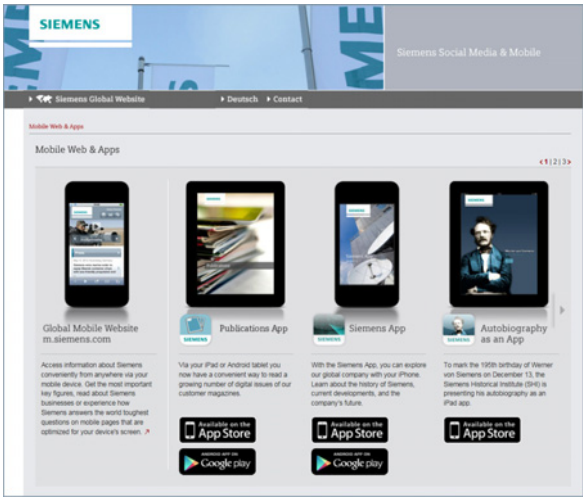

Connect with Siemens through social media: visit our social networking sites for a wealth of useful information, demos on products and services, the opportunity to provide feedback, to exchange information and ideas with customers and other Siemens employees, and much, much more. Stay in the know and follow us on the ever-expanding global network of social media.

To find out more about Siemens' current social media activities, visit us at:

www.siemens.com/socialmedia

Or via our product pages at:

www.siemens.com/automation or www.siemens.com/drives

Connect with Siemens Industry at our central access point to read all the news on the future of manufacturing, watch current videos and inform yourself about all the latest industry developments:

www.siemens.com/future-of-manufacturing

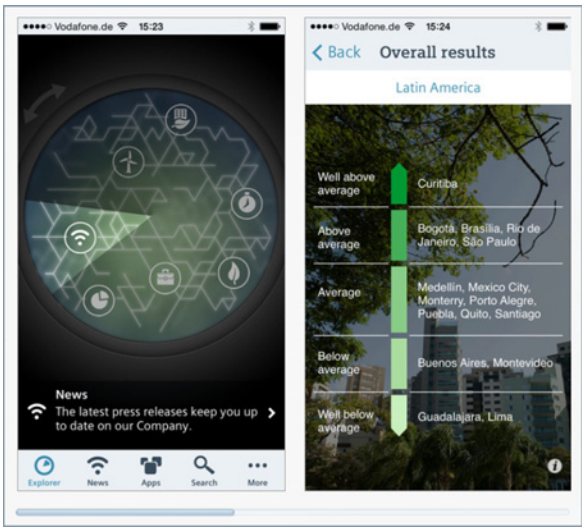

Discover the world of Siemens.

We are also constantly expanding our offering of cross-platform apps for smartphones and tablets. You will find the current Siemens apps at the App Store (iOS) or at Google Play (Android):

https://itunes.apple.com/en/app/siemens/id452698392?mt=8

https://play.google.com/store/search?q=siemens

The Siemens app, for example, tells you all about the history, latest developments and future plans of the company – with informative pictures, fascinating reports and the most recent press releases.

© Siemens AG 2017

Overview

Unleash potential – with services from Siemens

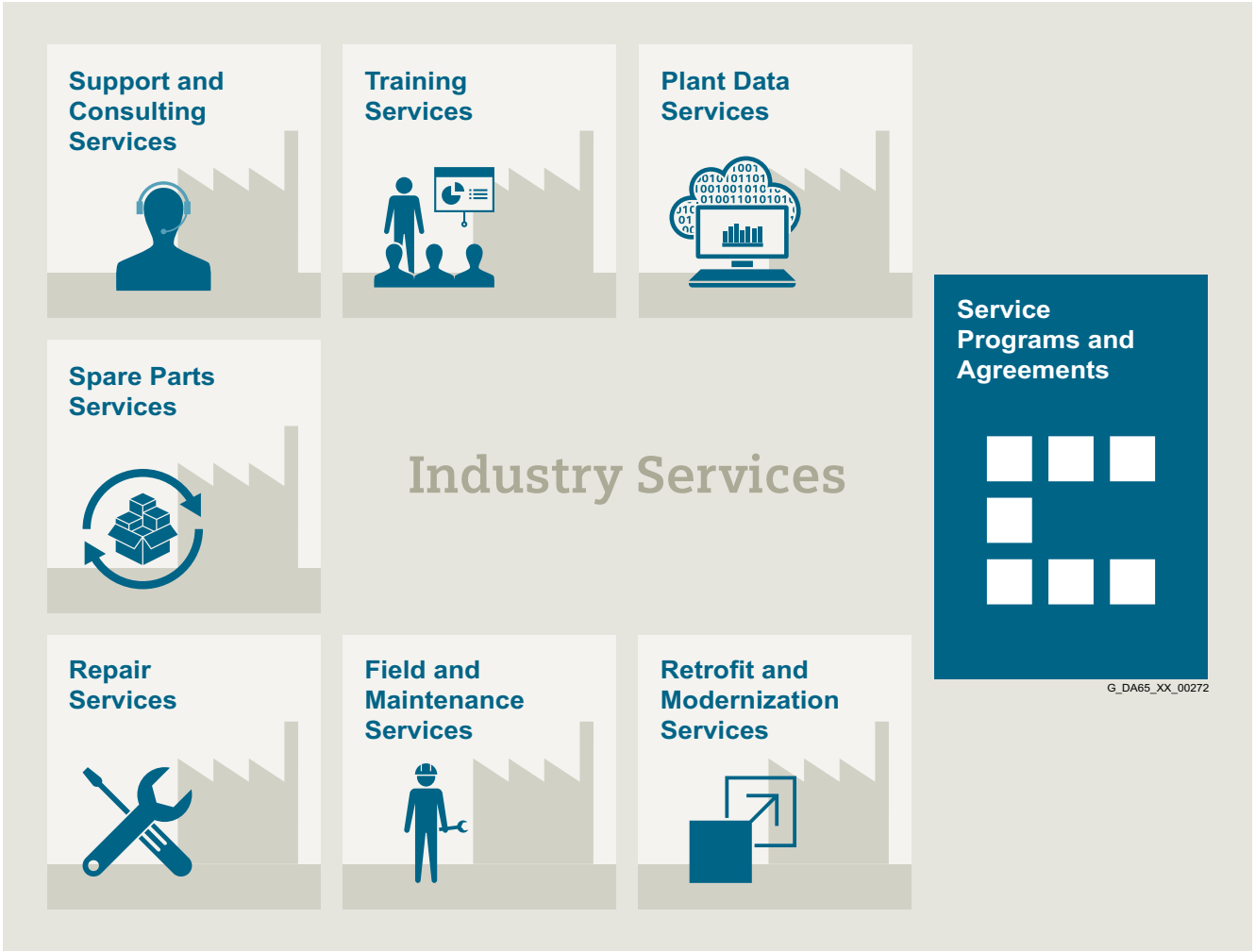

Increase your performance – with Industry Services

Optimizing the productivity of your equipment and operations can be a challenge, especially with constantly changing market conditions. Working with our service experts makes it easier. We understand your industry's unique processes and provide the services needed so that you can better achieve your business goals.

You can count on us to maximize your uptime and minimize your downtime, increasing your operations' productivity and reliability. When your operations have to be changed quickly to meet a new demand or business opportunity, our services give you the flexibility to adapt. Of course, we take care that your production is protected against cyber threats. We assist in keeping your operations as energy and resource efficient as possible and reducing your total cost of ownership. As a trendsetter, we ensure that you can capitalize on the opportunities of digitalization and by applying data analytics to enhance decision making: You can be sure that your plant reaches its full potential and retains this over the longer lifespan.

You can rely on our highly dedicated team of engineers, technicians and specialists to deliver the services you need – safely, professionally and in compliance with all regulations. We are there for you, where you need us, when you need us.

© Siemens AG 2017

Overview

Plant Data Services



Make your industrial processes transparent to gain improvements in productivity, asset availability, and energy efficiency.

Production data is generated, filtered and translated with intelligent analytics to enhance decision-making.

This is done whilst taking data security into consideration and with continuous protection against cyber attack threats.

www.industry.siemens.com/services/global/en/portfolio/plant-data-services/Pages/index.aspx

Support and Consulting Services



Industry Online Support site for comprehensive information, application examples, FAQs and support requests.

Technical and Engineering Support for advice and answers for all inquiries about functionality, handling, and fault clearance.

Information & Consulting Services, e.g. SIMATIC System Audit; clarity about the state and service capability of your automation system or Lifecycle Information Services; transparency on the lifecycle of the products in your plants.

www.industry.siemens.com/services/global/en/portfolio/support-consulting/Pages/index.aspx

Training Services



From the basics and advanced to specialist skills, SITRAIN courses provide expertise right from the manufacturer – and encompass the entire spectrum of Siemens products and systems for the industry.

Worldwide, SITRAIN courses are available wherever you need a training course in more than 170 locations in over 60 countries.

www.industry.siemens.com/services/global/en/portfolio/training/Pages/index.aspx

Spare Parts Services

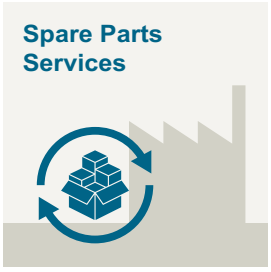

Are available worldwide for smooth and fast supply of spare parts – and thus optimal plant availability. Genuine spare parts are available for up to ten years. Logistic experts take care of procurement, transport, custom clearance, storage and order management. Reliable logistics processes ensure that components reach their destination as needed.

Asset optimization services help you design a strategy for parts supply where your investment and carrying costs are reduced and the risk of obsolescence is avoided.

www.industry.siemens.com/services/global/en/portfolio/spare_parts/Pages/index.aspx

© Siemens AG 2017

Industry Services – Portfolio overview

Overview (continued)



Are offered on-site and in regional repair centers for fast restoration of faulty devices' functionality.

Also available are extended repair services, which include additional diagnostic and repair measures, as well as emergency services.

www.industry.siemens.com/services/global/en/portfolio/repair_services/Pages/index.aspx



Provide a cost-effective solution for the expansion of entire plants, optimization of systems or upgrading existing products to the latest technology and software, e.g. migration services for automation systems.

Service experts support projects from planning through commissioning and, if desired over the entire extended lifespan, e.g. Retrofit for Integrated Drive Systems for an extended lifetime of your machines and plants

www.industry.siemens.com/services/global/en/portfolio/retrofit-modernization/Pages/index.aspx



Siemens specialists are available globally to provide expert field and maintenance services, including commissioning, functional testing, preventive maintenance and fault clearance.
All services can be included in customized service agreements with defined reaction times or fixed maintenance intervals.

www.industry.siemens.com/services/global/en/portfolio/field_service/Pages/index.aspx



A technical Service Program or Agreement enables you to easily bundle a wide range of services into a single annual or multi-year agreement.

You pick the services you need to match your unique requirements or fill gaps in your organization's maintenance capabilities.
Programs and agreements can be customized as KPI-based and/or performance-based contracts.

www.industry.siemens.com/services/global/en/portfolio/service_programs/Pages/index.aspx

© Siemens AG 2017

Overview



Online Support is a comprehensive information system for all questions relating to products, systems, and solutions that Siemens has developed for industry over time. With more than 300,000 documents, examples and tools, it offers users of automation and drive technology a way to quickly find up-to-date information. The 24-hour service enables direct, central access to detailed product information as well as numerous solution examples for programming, configuration and application.

The content, in six languages, is increasingly multimedia-based – and now also available as a mobile app. Online support's "Technical Forum" offers users the opportunity to share information with each other. The "Support Request" option can be used to contact Siemens' technical support experts.
The latest content, software updates, and news via newsletters and Twitter ensure that industry users are always up to date.

www.siemens.com/industry/onlinesupport

Online Support App

Using the Online Support app, you can access over 300,000 documents covering all Siemens industrial products – anywhere, any time. Regardless of whether you need help implementing your project, fault-finding, expanding your system or are planning a new machine.

You have access to FAQs, manuals, certificates, characteristic curves, application examples, product notices (e.g. announcements of new products) and information on successor products in the event that a product is discontinued.

Just scan the product code printed on the product directly using the camera of your mobile device to immediately see all technical information available on this product at a glance.
The graphical CAx information (3D model, circuit diagrams or EPLAN macros) is also displayed. You can forward this information to your workplace using the e-mail function.

The search function retrieves product information and articles and supports you with a personalized suggestion list. You can find your favorite pages – articles you need frequently – under "mySupport". You also receive selected news on new functions, important articles or events in the News section.

Scan the QR code for information on our Online Support app.

The app is available free of charge from the Apple App Store (iOS) or from Google Play (Android).

https://support.industry.siemens.com/cs/ww/en/sc/2067

© Siemens AG 2017

Notes

© Siemens AG 2017

© Siemens AG 2017

1. General Provisions

By using this catalog you can acquire hardware and software products described therein from Siemens AG subject to the following Terms and Conditions of Sale and Delivery (hereinafter referred to as "T&C"). Please note that the scope, the quality and the conditions for supplies and services, including software products, by any Siemens entity having a registered office outside Germany, shall be subject exclusively to the General Terms and Conditions of the respective Siemens entity. The following T&C apply exclusively for orders placed with Siemens Aktiengesellschaft, Germany.

1.1 For customers with a seat or registered office in Germany

For customers with a seat or registered office in Germany, the following applies subordinate to the T&C:

- the "General Terms of Payment"[1)] and,
- for software products, the "General License Conditions for Software Products for Automation and Drives for Customers with a Seat or Registered Office in Germany"[1)] and,
- for other supplies and services, the "General Conditions for the Supply of Products and Services of the Electrical and Electronics Industry"[1)].

1.2 For customers with a seat or registered office outside Germany

For customers with a seat or registered office outside Germany, the following applies subordinate to the T&C:

- the "General Terms of Payment"[1)] and,
- for software products, the "General License Conditions for Software Products for Automation and Drives for Customers with a Seat or Registered Office outside of Germany"[1)] and
- for other supplies and/or services, the "General Conditions for Supplies of Siemens Industry for Customers with a Seat or Registered Office outside of Germany"[1)].

2. Prices

The prices are in € (Euro) ex point of delivery, exclusive of packaging.

The sales tax (value added tax) is not included in the prices. It shall be charged separately at the respective rate according to the applicable statutory legal regulations.

Prices are subject to change without prior notice. We will charget the prices valid at the time of delivery.

To compensate for variations in the price of raw materials (e.g. silver, copper, aluminum, lead, gold, dysprosium and neodym), surcharges are calculated on a daily basis using the so-called metal factor for products containing these raw materials. A surcharge for the respective raw material is calculated as a supplement to the price of a product if the basic official price of the raw material in question is exceeded.

The metal factor of a product indicates the basic official price (for those raw materials concerned) as of which the surcharges on the price of the product are applied, and with what method of calculation.

An exact explanation of the metal factor can be downloaded at:

www.siemens.com/automation/salesmaterial-as/catalog/en/terms_of_trade_en.pdf

To calculate the surcharge (except in the cases of dysprosium and neodym), the official price from the day prior to that on which the order was received or the release order was effected is used.

To calculate the surcharge applicable to dysprosium and neodym ("rare earths"), the corresponding three-month basic average price in the quarter prior to that in which the order was received or the release order was effected is used with a one-month buffer (details on the calculation can be found in the explanation of the metal factor).

3. Additional Terms and Conditions

The dimensions are in mm. In Germany, according to the German law on units in measuring technology, data in inches apply only to devices for export.

Illustrations are not binding.

Insofar as there are no remarks on the individual pages of this catalog - especially with regard to data, dimensions and weights given - these are subject to change without prior notice.

4. Export regulations

We shall not be obligated to fulfill any agreement if such fulfillment is prevented by any impediments arising out of national or international foreign trade or customs requirements or any embargoes and/or other sanctions.

Export of goods listed in this catalog may be subject to licensing requirements. We will indicate in the delivery details whether licenses are required under German, European and US export lists. Goods labeled with "AL" not equal to "N" are subject to European or German export authorization when being exported out of the EU. Goods labeled with "ECCN" not equal to "N" are subject to US re-export authorization.

The export indications can be viewed in advance in the description of the respective goods on the Industry Mall, our online catalog system. Only the export labels "AL" and "ECCN" indicated on order confirmations, delivery notes and invoices are authoritative.

Even without a label, or with label "AL:N" or "ECCN:N", authorization may be required i .a. due to the final disposition and intended use of goods.

If you transfer goods (hardware and/or software and/or technology as well as corresponding documentation, regardless of the mode of provision) delivered by us or works and services (including all kinds of technical support) performed by us to a third party worldwide, you must comply with all applicable national and international (re-)export control regulations.

If required for the purpose of conducting export control checks, you (upon request by us) shall promptly provide us with all information pertaining to the particular end customer, final disposition and intended use of goods delivered by us respectively works and services provided by us, as well as to any export control restrictions existing in this relation.

The products listed in this catalog may be subject to European/German and/or US export regulations. Any export requiring approval is therefore subject to authorization by the relevant authorities.

Errors excepted and subject to change without prior notice.

1) The text of the Terms and Conditions of Siemens AG can be downloaded at
www.siemens.com/automation/salesmaterial-as/catalog/en/terms_of_trade_en.pdf

© Siemens AG 2017

Catalogs

Digital Factory, Process Industries and Drives and Energy Management

Further information can be obtained from our branch offices listed at www.siemens.com/automation-contact

Interactive Catalog on DVD	*Catalog*
Products for Automation and Drives	**CA 01**
Building Control	
GAMMA Building Control	ET G1
Drive Systems	
SINAMICS G130 Drive Converter Chassis Units SINAMICS G150 Drive Converter Cabinet Units	D 11
SINAMICS GM150, SINAMICS SM150 Medium-Voltage Converters	D 12
SINAMICS PERFECT HARMONY GH180 Medium-Voltage Air-Cooled Drives (Germany Edition)	D 15.1
SINAMICS G180 Converters – Compact Units, Cabinet Systems, Cabinet Units Air-Cooled and Liquid-Cooled	D 18.1
SINAMICS S120 Chassis Format Units and Cabinet Modules SINAMICS S150 Converter Cabinet Units	D 21.3
SINAMICS S120 and SIMOTICS	D 21.4
SINAMICS DCM DC Converter, Control Module	D 23.1
SINAMICS DCM Cabinet	D 23.2
SINAMICS Inverters for Single-Axis Drives and SIMOTICS Motors	D 31
Digital: SINAMICS G120P and SINAMICS G120P Cabinet pump, fan, compressor converters	*D 35*
LOHER VARIO High Voltage Motors Flameproof, Type Series 1PS4, 1PS5, 1MV4 and 1MV5 Frame Size 355 to 1000, Power Range 80 to 7100 kW	D 83.2
Three-Phase Induction Motors SIMOTICS HV, SIMOTICS TN	D 84.1
High Voltage Three-phase Induction Motors SIMOTICS HV Series A-compact PLUS	D 84.9
Three-Phase Induction Motors SIMOTICS HV, Series H-compact	D 86.1
Synchronous Motors with Permanent-Magnet Technology, HT-direct	D 86.2
DC Motors	DA 12
SIMOREG DC MASTER 6RA70 Digital Chassis Converters	DA 21.1
SIMOREG K 6RA22 Analog Chassis Converters	DA 21.2
Digital: SIMOREG DC MASTER 6RM70 Digital Converter Cabinet Units	*DA 22*
SIMOVERT PM Modular Converter Systems	DA 45
SIEMOSYN Motors	DA 48
MICROMASTER 420/430/440 Inverters	DA 51.2
MICROMASTER 411/COMBIMASTER 411	DA 51.3
Low-Voltage Three-Phase-Motors	
SIMOTOCS S-1FG1 Servo geared motors	D 41
SIMOTICS Low-Voltage Motors	D 81.1
SIMOTICS FD Low-Voltage Motors	D 81.8
LOHER Low-Voltage Motors	D 83.1
MOTOX Geared Motors	D 87.1
SIMOGEAR Geared Motors	MD 50.1
SIMOGEAR Gearboxes with adapter	MD 50.11
Mechanical Driving Machines	
FLENDER Standard Couplings	MD 10.1
FLENDER High Performance Couplings	MD 10.2
FLENDER Backlash-free Couplings	MD 10.3
FLENDER SIP Standard industrial planetary gear units	MD 31.1
Process Instrumentation and Analytics	
Digital: Field Instruments for Process Automation	*FI 01*
Digital: Display Recorders SIREC D	*MP 20*
Digital: SIPART Controllers and Software	*MP 31*
Products for Weighing Technology	WT 10
Process Analytical Instruments	AP 01
Digital: Process Analytics, Components for Continuous Emission Monitoring	*AP 11*

Low-Voltage Power Distribution and Electrical Installation Technology	*Catalog*
SENTRON · SIVACON · ALPHA Protection, Switching, Measuring and Monitoring Devices, Switchboards and Distribution Systems	LV 10
Standards-Compliant Components for Photovoltaic Plants	LV 11
Electrical Components for the Railway Industry	LV 12
TÜV-certified Power Monitoring System	LV 14
Components for Industrial Control Panels according to UL Standards	LV 16
3WT Air Circuit Breakers up to 4000 A	LV 35
3VT Molded Case Circuit Breakers up to 1600 A	LV 36
Digital: SIVACON System Cubicles, System Lighting and System Air-Conditioning	*LV 50*
Digital: ALPHA Distribution Systems	*LV 51*
ALPHA FIX Terminal Blocks	LV 52
SIVACON S4 Power Distribution Boards	LV 56
SIVACON 8PS Busbar Trunking Systems	LV 70
Digital: DELTA Switches and Socket Outlets	*ET D1*
Motion Control	
SINUMERIK 840 Equipment for Machine Tools	NC 62
SINUMERIK 808 Equipment for Machine Tools	NC 81.1
SINUMERIK 828 Equipment for Machine Tools	NC 82
SIMOTION Equipment for Production Machines	PM 21
Digital: Drive and Control Components for Cranes	*CR 1*
Power Supply	
SITOP Power supply	KT 10.1
Safety Integrated	
Safety Technology for Factory Automation	SI 10
SIMATIC HMI / PC-based Automation	
Human Machine Interface Systems/ PC-based Automation	ST 80/ ST PC
SIMATIC Ident	
Industrial Identification Systems	ID 10
SIMATIC Industrial Automation Systems	
Products for Totally Integrated Automation	ST 70
SIMATIC PCS 7 Process Control System System components	ST PCS 7
SIMATIC PCS 7 Process Control System Technology components	ST PCS 7 T
Add-ons for the SIMATIC PCS 7 Process Control System	ST PCS 7 AO
SIMATIC NET	
Industrial Communication	IK PI
SIRIUS Industrial Controls	
SIRIUS Industrial Controls	IC 10

Digital: These catalogs are only available as a PDF.

Information and Download Center

Digital versions of the catalogs are available on the Internet at:
www.siemens.com/industry/infocenter
There you'll find additional catalogs in other languages.

Please note the section "Downloading catalogs" on page "Online services" in the appendix of this catalog.

© Siemens AG 2017

Get more information

Siemens geared motors:
www.siemens.com/gearedmotors

Local partners worldwide:
www.siemens.com/automation-contact

Siemens AG
Digital Factory Division
Motion Control
Geared Motors
Postfach 17 09
72007 Tübingen
Germany

© Siemens AG 2017
Subject to change without prior notice
Article No. E86060-K5250-A111-A5-7600
V6.MKKATA.GMP.101 / Dispo 18409
KG 0217 3.0 PAS 824 En
Printed in Germany

The information provided in this catalog contains merely general descriptions or characteristics of performance which in case of actual use do not always apply as described or which may change as a result of further development of the products. An obligation to provide the respective characteristics shall only exist if expressly agreed in the terms of contract. Availability and technical specifications are subject to change without notice.

All product designations may be trademarks or product names of Siemens AG or supplier companies whose use by third parties for their own purposes could violate the rights of the owners.

Token fee: 10.00 €

Security information

Siemens provides products and solutions with industrial security functions that support the secure operation of plants, systems, machines and networks.

In order to protect plants, systems, machines and networks against cyber threats, it is necessary to implement – and continuously maintain – a holistic, state-of-the-art industrial security concept. Siemens' products and solutions only form one element of such a concept.

Customer is responsible to prevent unauthorized access to its plants, systems, machines and networks. Systems, machines and components should only be connected to the enterprise network or the internet if and to the extent necessary and with appropriate security measures (e.g. use of firewalls and network segmentation) in place.

Additionally, Siemens' guidance on appropriate security measures should be taken into account. For more information about industrial security, please visit **http://www.siemens.com/industrialsecurity.**

Siemens' products and solutions undergo continuous development to make them more secure. Siemens strongly recommends to apply product updates as soon as available and to always use the latest product versions. Use of product versions that are no longer supported, and failure to apply latest updates may increase customer's exposure to cyber threats.

To stay informed about product updates, subscribe to the Siemens Industrial Security RSS Feed under **http://www.siemens.com/industrialsecurity.**

Please scan the QR code for more information on Siemens Geared Motors.